Digital Still Camera Image

File Format Standard

(Exchangeable image file format

for Digital Still Cameras: Exif)

Version 2.1

June 12, 1998

Japan Electronic Industry Development Association

(JEIDA)

 GOOGLE EXHIBIT 1008

This standard makes no warranty, express or implied, with respect to the use of any intellectual property, such as patents, copyrights and trademarks, belonging to any corporation or individual. Nor does this standard make any warranty regarding system reliability or product liability.

Windows™ is a registered trademark of Microsoft Corporation in the United States and elsewhere. FlashPix™ is a registered trademark of Eastman Kodak Company.

Revision History

This "Digital Still Camera Image File Format Standard" is issued as a standard for the image file format (Exif: Exchangeable image file format) used in digital still cameras and related systems. It was first published in October 1996 as Version 1.0[i]. Then in May 1997, Version 1.1[ii] was issued, adding specifications for optional attribute information as well as stipulations relating to format implementation, in addition to the mandatory specifications of Version 1.0.

The desire for a uniform file format standard for the image data stored by digital still cameras has increased as these cameras have grown in popularity. At the same time, with the broadening application of this technology, a similar desire has arisen for uniformity of the attribute information that can be recorded in a file.

The Version 2.0[iii] makes improvements to the Exif format for greater ease of use, while allowing for backward compatibility with products of manufacturers currently implementing Exif Version 1.x or considering its future implementation. The present Version 2.1 contains Recommended Exif Interoperability Rules.

The following additions and changes are made from Version 1.1 to Version 2.1.

[Additions]

- Audio file format specification
- JPEG compressed thumbnail specification
- Chrominance sampling method Y:Cb:Cr = 4:2:0.
- Tags for FlashPix transformation
- Additional tags for picture-taking conditions
- APP2 marker segment specification for FlashPix extensions
- Definition of color space information
- Addition of Interoperability IFD (Version 2.1)
- Addition of [Appendix D.1 Recommended Exif Interoperability Rules ExifR98] (Version2.1)

[Changes]

- Combined into one chapter the separate chapters on the Exif file specification and implementation specification (Exif-1).
- Removed the limitation on number of pixels (multiples of 8 and 16) to allow for expanded implementation.
- Content of ExifVersion Tag is changed into 2.1

Contents

Revision History

Contents

1. General 1
   1.1. Objectives 1
   1.2. Scope and Abbreviation 1
   1.3. Format Structure 1
   1.4. Exif Image File Specification 2
   1.5. Exif Audio File Specification 3
   1.6. Relation between Image and Audio File Specification 4
   1.7. Presupposed Systems and Compatibility 5
2. Exif Image File Specification 6
   2.1. Outline of the Exif Image File Specification 6
   2.2. Format Version 6
   2.3. Definition of Glossary 6
   2.4. Specifications Relating to Image Data 8
      2.4.1. Number of Pixels 8
      2.4.2. Pixel Aspect 8
      2.4.3. Pixel Composition and Sampling 8
      2.4.4. Image Data Arrangement 10
   2.5. Basic Structure of Image Data 11
      2.5.1. Basic Structure of Primary Image Data 11
      2.5.2. Basic Structure of Uncompressed RGB Data 11
      2.5.3. Basic Structure of YCbCr Uncompressed Data 13
      2.5.4. Basic Structure of JPEG Compressed Data 14
      2.5.5. Basic Structure of Thumbnail Data 15
   2.6. Tags 17
      2.6.1. Features of Attribute Information 17
      2.6.2. IFD Structure 17
      2.6.3. Exif-specific IFD 19
      2.6.4. TIFF Rev. 6.0 Attribute Information 21
      2.6.5. Exif IFD Attribute Information 34
      2.6.6. GPS Attribute Information 56
      2.6.7. Interoperability IFD Attribute Information 65
      2.6.8. Tag Support Levels 66
   2.7. JPEG Marker Segments Used in Exif 70
      2.7.1. JPEG Marker Segments 70
      2.7.2. Interoperability Structure of APP1 in Compressed Data 76

2.7.3. Interoperability Structure of APP2 in Compressed Data 78
2.8. Data Description 83
2.8.1. Stipulations on Compressed Image Size 83
2.8.2. Stipulations on Thumbnails 87
2.8.3. File Name Stipulations 87
2.8.4. Byte Order Stipulations 87
3. Exif Audio File Specification 88
3.1. Outline of the Exif Audio File Specification 88
3.2. Format Version 88
3.3. Definition of Terms 88
3.4. Specifications Relating to Audio Data 89
3.4.1. Sampling Frequency 89
3.4.2. Bit Size 89
3.4.3. Channels 89
3.4.4. Compression Schemes 89
3.5. Basic Structure of Audio Data 90
3.5.1. Basic Structure of WAVE Form Audio Files 90
3.5.2. Basic Structure of PCM Audio Data 100
3.5.3. Basic Structure of μ-Law Audio Data 103
3.5.4. Basic Structure of IMA-ADPCM Audio Data 105
3.6. Chunks Used 109
3.6.1. WAVE Form Audio File Basic Chunks 109
3.6.2. LIST Chunk and INFO List 110
3.6.3. Chunks for Attribute Information Specific to Exif Audio Files 116
3.7. Data Description 122
3.7.1. File Naming Stipulation 122
A Image File Description Examples 125
A.1 Uncompressed RGB File 125
A.2 Uncompressed YCbCr File 128
A.3 JPEG Compressed (4:2:2) File 133
A.4 JPEG Compressed (4:2:0) File 138
B Audio File Description Examples 144
B.1 PCM Audio Data 144
-Law Audio Data 146
B.3 IMA-ADPCM Audio Data 149
C APEX Units 152
D Recommended Implementation Examples 153
D.1 Recommended Directory Name Usage Examples 153
D.2 Recommended File Naming Usage Examples 153

D.3 Recommended File Operation Usage Examples.....153
D.4 Interoperability "Recommended Exif Interoperability Rules" (ExifR98).....154
E Color Space Guidelines.....155
E.1 sRGB.....155
E.2 Tone Reproduction (Brightness and Contrast).....155
E.3 Luminance/Chrominance and RGB Transformation.....156
F Notes on Conversion to FlashPix.....157
F.1 Converting Image Data.....158
F.2 Converting Tag Data.....160
F.3 Converting to FlashPix Extensions (APP2).....163
References.....166

1. General

1.1. Objectives

This document specifies a standard file format for the image data recorded by digital still cameras (DSC) and related systems, which use a PC Card or other removable memory medium. The aim is to ensure data compatibility and exchangeability, providing a framework in which these products can be used readily by ordinary consumers. In this way it is hoped the standard will contribute to the infrastructure of the information age, as it evolves with the rapid proliferation of personal computers and other information technologies.

1.2. Scope and Abbreviation

This standard applies to the image files recorded on PC Cards and other removable memory by DSC and related systems. The standard is abbreviated as Exif (Exchangeable image file format).

Note: This standard makes no warranty with respect to the use of "Exif" as a trademark.

1.3. Format Structure

This standard consists of the Exif image file specification and the Exif audio file specification (see Fig. 1). The recording medium specification shall conform to the standard for the particular medium used and is not specified here. Recommendations on implementation are given in Appendix D for directory and file naming.

Exif image file specification	Exif audio file specification
Recording medium specification	

Fig. 1 Format structure

1.4. Exif Image File Specification

The Exif image file specification stipulates the method of recording image data in files, and specifies the following items:

- Structure of image data files,
- Tags used by this standard,
- Definition and management of format versions.

Features of the Exif image file specification include the following.

The file-recording format is based on existing formats. Compressed files are recorded as JPEG (ISO/IEC 10918-1[iv]) with application marker segments (APP1 and APP2) inserted. Uncompressed files are recorded in TIFF Rev. 6.0[v] format. The use of existing formats means files recorded using a DSC or related system can be read directly by commercial applications, and makes possible the use of functions for viewing and manipulating the images.

Related attribute information for both compressed and uncompressed files is stored in the tag information format defined in TIFF Rev. 6.0. Information specific to the camera system and not defined in TIFF is stored in private tags registered for Exif. The Exif image file specification also specifies the method for recording thumbnails. The reason for using the TIFF Rev. 6.0 tag format in the compressed file APP1 segment is to facilitate exchange of attribute data between Exif compressed and uncompressed files.

Compressed files can record extended data exceeding 64 Kbytes by dividing it into multiple APP2 segments. The APP2 segment is used when recording FlashPix[vi] extensions.

A feature of Exif image files is their compatibility with standard formats in wide use today, enabling them to be used on personal computers and other information systems. The intention is to promote widespread use of digital still cameras.

Details of the Exif image file specification are given in Chapter 2 of this document.

1.5. Exif Audio File Specification

The Exif audio file specification stipulates the method of writing audio data in files, and specifies the following items:

- Structure of audio data files,
- Chunks,
- Definition and management of format versions.

Features of the Exif audio file specification include the following.

Files are recorded using the existing RIFF WAVE Form Audio File format.[vii] As data formats, PCM and μ-Law PCM (conforming to ITU-T G.711[viii]) are used for uncompressed audio data, and IMA-ADPCM[ix] for compressed audio data. As with the image files specification, the aim is to enable direct reading, playback and manipulation of the files using the functions in commercial applications.

Related attribute information is stored as an *INFO list* in the case of general attributes, and as Exif-specific chunks in the case of attributes specific to Exif. The Exif-specific chunks are newly provided to enable necessary information to be added by making use of chunk extensibility. The recording of data in an Exif-specific chunk is done in the same way as for an *INFO list*.

Exif audio files, like image files, feature compatibility with standard formats already in wide use, in order to promote the widespread use of digital still cameras.

Details of the Exif audio file specification are given in Chapter 3 of this document.

1.6. Relation between Image and Audio File Specification

This standard includes specifications not only for an image file format but also for an audio file format enabling the recording of audio as a supplementary function.

Also specified in this standard is the relational information indicating the relation between image files and audio files.

Mapping between image files and audio files can be done in various ways; but the Exif standard specifies only the simplest mapping, with others left up to the implementation.

1.7. Presupposed Systems and Compatibility

The image systems presupposed by this standard consist of three elements as follows:

- Equipment: Imaging devices such as cameras, printers and filing equipment,
- Commercial software: Off-the-shelf image processing software running on personal computers,
- Specialized software: Dedicated (system-specific) image processing software running on personal computers.

Image file compatibility on these systems is achieved as follows. The DSC or other system writes data to files in the format specified in this standard. A basic condition of equipment with a playback function is that it be able to read the files it recorded itself. In a personal computer environment, the basic requirement is that dedicated software be able to read all the images, audio and attribute information recorded in conformance with this standard (see Fig. 2).

Fig. 2 Compatibility Concepts

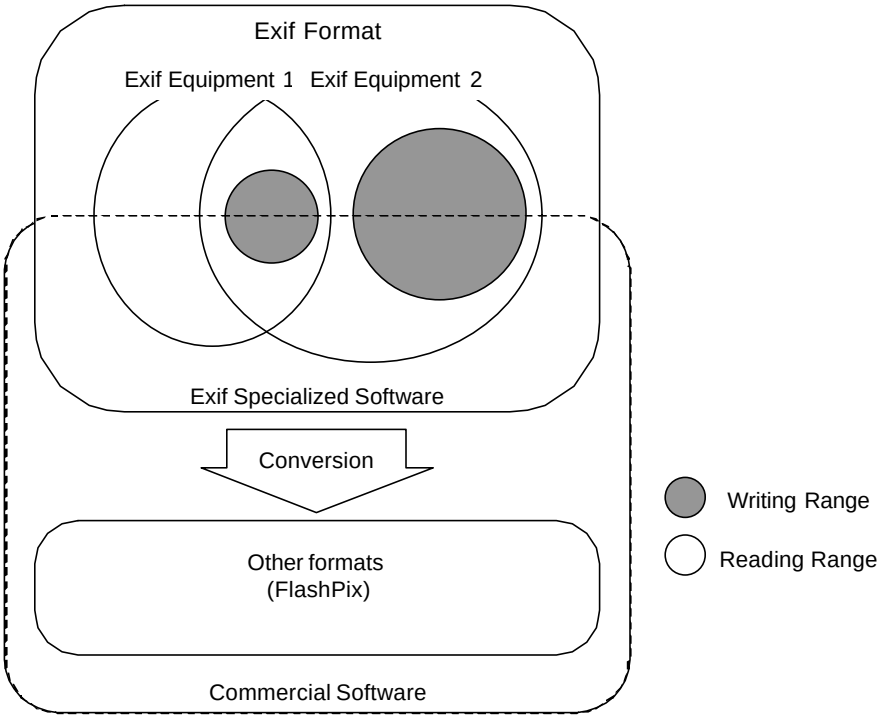

2. Exif Image File Specification

2.1. Outline of the Exif Image File Specification

This chapter gives details of the image file specification, covering the following items:

- Format version definition,
- Specifications relating to image data,
- Basic structure of image data,
- Tags,
- JPEG marker segments,
- Specifications on data recording.

2.2. Format Version

The version of the format specified here is recorded as 4 bytes (see section 2.6.5). The address bytes are recorded as A1, A2, B1, and B2, starting with the lowest number. A1 and A2 store the upper part of the standard version, with the lower part stored in B1 and B2. When changes are made to the version number of this standard, the following rules apply.

- When the changes are such that data readers can properly recognize conventional information and skip the data that was recorded using newly added functions, the lower part of the version (B1, B2) is changed.
- When there is a possibility that a data reader implementing the old standard may operate incorrectly due to the new specifications, the upper part of the version (A1, A2) is changed.

Players should be able to play back files of versions earlier than the supported standard.

2.3. Definition of Glossary

Terms and notation are used as follows in this standard:

- "Tag" is used as a synonym of "field",
- ".H" appended to a numerical value means it is hexadecimal notation,
- Unless otherwise indicated, other numerical values are given in decimal notation,

- The initial IFD in a file is the "0th IFD," with the next IFD being called the 1st IFD,
- The original image is called the "primary image," and small images used to index the primary images are called "thumbnail" images,
- Data referred to in the JPEG standard as "Interoperability coded data" is here called "compressed data".

2.4. Specifications Relating to Image Data

2.4.1. Number of Pixels

There is no limit on number of pixels of the primary image when it is recorded as either uncompressed or JPEG compressed data. Note that when recording as JPEG compressed data images for which the number of lines (*ImageLength*) or number of samples/line (*ImageWidth*) is not a multiple of 8 or 16, the method of recording is as stipulated in section 2.8.1. The above specification applies similarly to thumbnails.

2.4.2. Pixel Aspect

Image data is recorded as square pixels with a pixel aspect ratio of 1:1. This specification is applied similarly to thumbnails.

2.4.3. Pixel Composition and Sampling

The combination of pixel composition and pixel sampling for image data must be RGB 4:4:4 and either Y:Cb:Cr = 4:2:2 or Y:Cb:Cr = 4:2:0. The pixel composition of image data must also be 8 bits each. This specification is applied similarly to thumbnails.

As sampling points on the elements making up pixels, the Y and Cb,Cr sampling points may be either co-sited or centered. Fig. 3 shows typical pixel sampling for image width w and height h. In the case of Y:Cb:Cr = 4:2:2, spatial co-siting is recommended for the sake of improved image quality on TV systems. For Y:Cb:Cr = 4:2:0, spatial centering is recommended as per the TIFF default and is most common format of the personal computer applications.

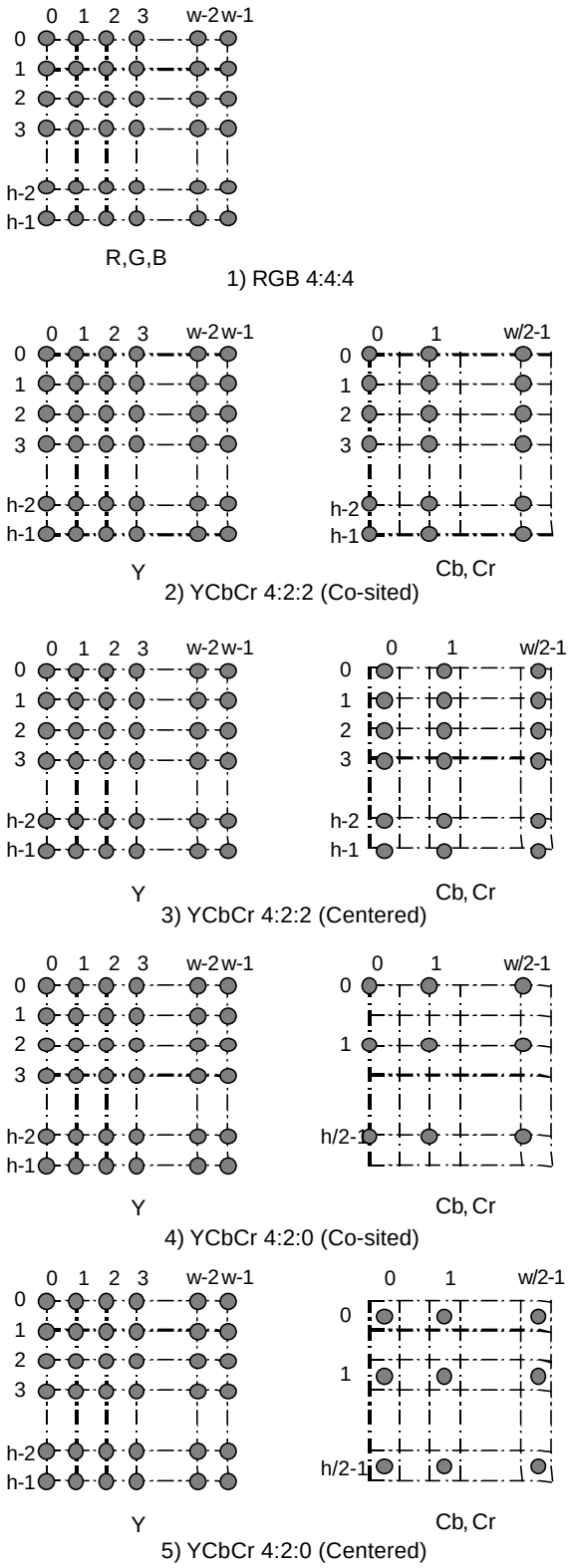

Fig. 3 Pixel Composition and Pixel Sampling

2.4.4. Image Data Arrangement

Image data must be arranged as follows. Uncompressed data shall consist of pixels with each line traced from left to right, and one screen shall consist of lines traced from top to bottom. JPEG compressed data shall consist of blocks configured of pixels traced in similar sequence. Fig. 4 shows the various data arrangements for recording in files images with pixels of width w and height h

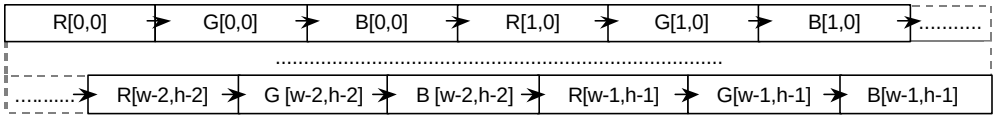

1) Uncompressed RGB Chunky (4:4:4)

2) Uncompressed RGB Planar (4:4:4)

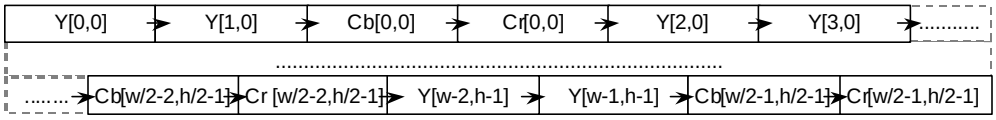

3) Uncompressed YCbCr Chunky (4:2:2)

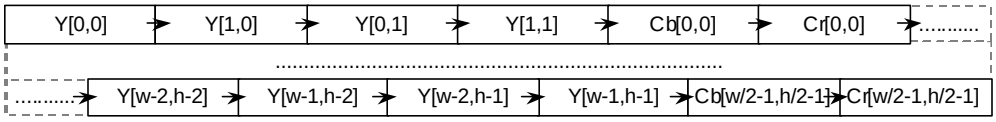

4) Uncompressed YCbCr Chunky (4:2:0)

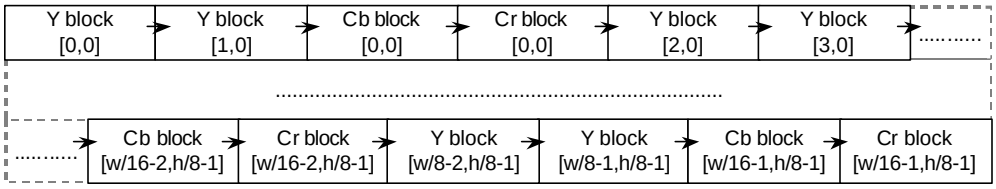

5) Compresed JPEG Block-Interleave (4:2:2)

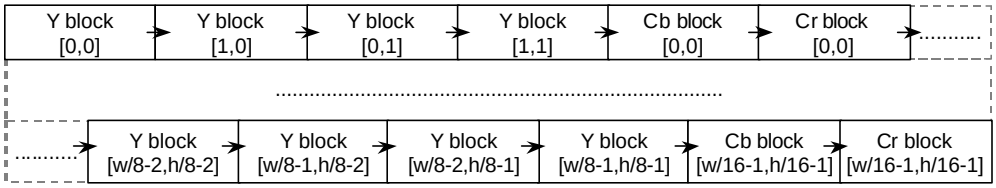

6) Compressed JPEG Block-Interleave (4:2:0)

Fig. 4 Data Arrangement

2.5. Basic Structure of Image Data

2.5.1. Basic Structure of Primary Image Data

Image data employs following existing image formats, depending on the image data type:

- RGB uncompressed data: Baseline TIFF Rev. 6.0 RGB Full Color Images [v],
- YCbCr uncompressed data: TIFF Rev. 6.0 Extensions YCbCr Images [v],
- JPEG compressed data: JPEG Baseline ADCT [iv].

For compressed data, the attribute information required by the DSC application shall be recorded in APP1. Data writing in APP1 shall be compatible with TIFF. The use of a common method of storing attribute information for both compressed and uncompressed data results in a simpler format, while the ability to add private tags for additional information takes advantage of the extensibility of the tag mechanism.

2.5.2. Basic Structure of Uncompressed RGB Data

Uncompressed RGB data is recorded in conformance with Baseline TIFF Rev. 6.0 RGB Full Color Images [v].

Attribute information is recorded in tags specified in TIFF Rev. 6.0. Attribute information specific to Exif is recorded using private tags reserved in TIFF for this standard. The private tags point to sets of this attribute information (Exif IFD).

Files are structured as follows (see Fig. 5). As in the TIFF standard, the recording location of each IFD value is not specified:

- File Header,
- 0th IFD,
- 0th IFD Value,
- 1st IFD,
- 1st IFD Value,
- 1st (Thumbnail) Image Data,
- 0th (Primary) Image Data.

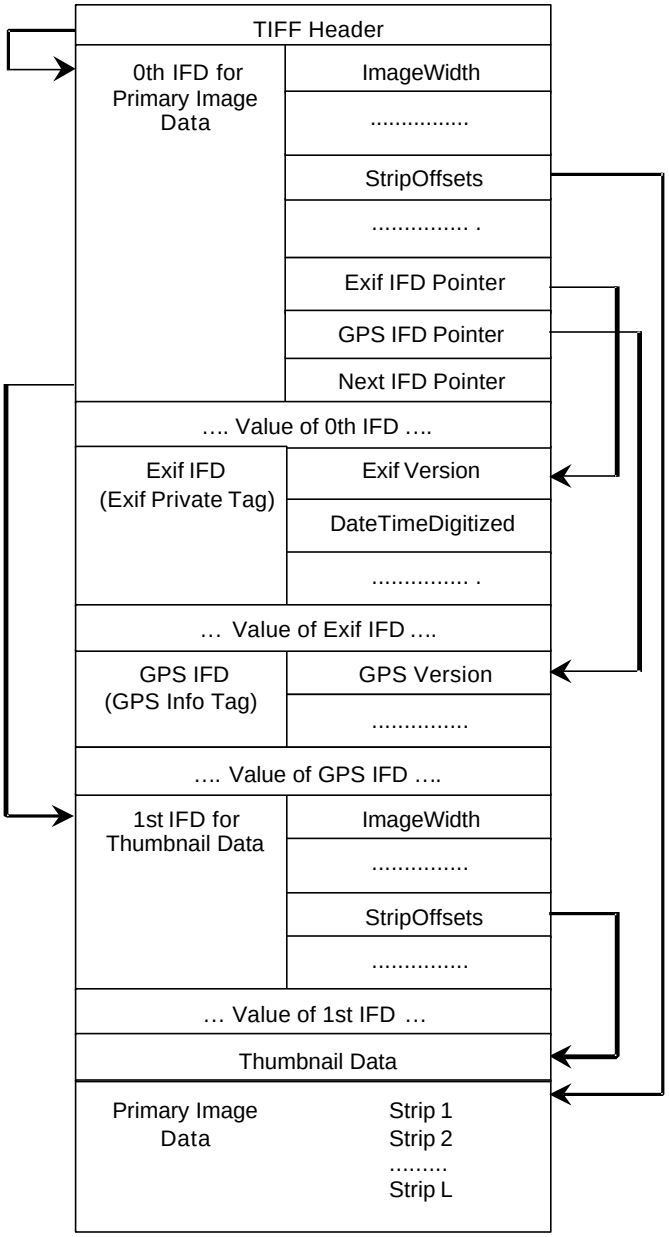

Fig. 5 Basic Structure of Uncompressed Data Files

File Headers are 8 bytes as defined in the TIFF standard, with the Offset of IFD indicating the start address of the 0th IFD (see Table 1).

The 0th IFD Offset of Next IFD indicates the start address of the 1st IFD (thumbnail images). When the 1st IFD is not recorded, the 0th IFD Offset of Next IFD terminates with 00000000.H.

On the IFD description method see section 2.6.2.

Table 1 TIFF Headers

Name	Size (Bytes)	Value
Byte Order	2	Written as either "II" (4949.H) (little endian) or "MM" (4D4D.H) (big endian) depending on the CPU of the machine doing the recording.
42	2	002A.H (fixed)
Offset of IFD	4	0th IFD offset. If the TIFF header is followed immediately by the 0th IFD, it is written as 00000008.H.

2.5.3. Basic Structure of YCbCr Uncompressed Data

YCbCr uncompressed data is recorded in conformance with TIFF Rev. 6.0 Extensions YCbCr Images[v]. Tags for the following information are available for YCbCr uncompressed data in addition to the attribute information for RGB uncompressed data;

- RGB-YCbCr color transformation matrix coefficients (*YCbCrCoefficients*),
- Chrominance subsampling information (*YCbCrSubSampling*),
- Information on matching/nonmatching of chrominance and luminance samples (*YCbCrPositioning*).

The method of recording other attribute information is the same as for uncompressed RGB data (see section 2.5.2).

2.5.4. Basic Structure of JPEG Compressed Data

Compressed data files are recorded in conformance with the JPEG DCT format specified in ISO/IEC 10918-1,[iv] with the Application Market Segment (APP1) inserted. APP1 is recorded immediately after the SOI marker indicating the beginning of the file (see Fig. 6). Multiple APP2 can be recorded as necessary, starting immediately after APP1. APPn other than APP1 and APP2 or COM segments are not used by Exif. However Exif readers should be designed skip over unknown APPn and COM.

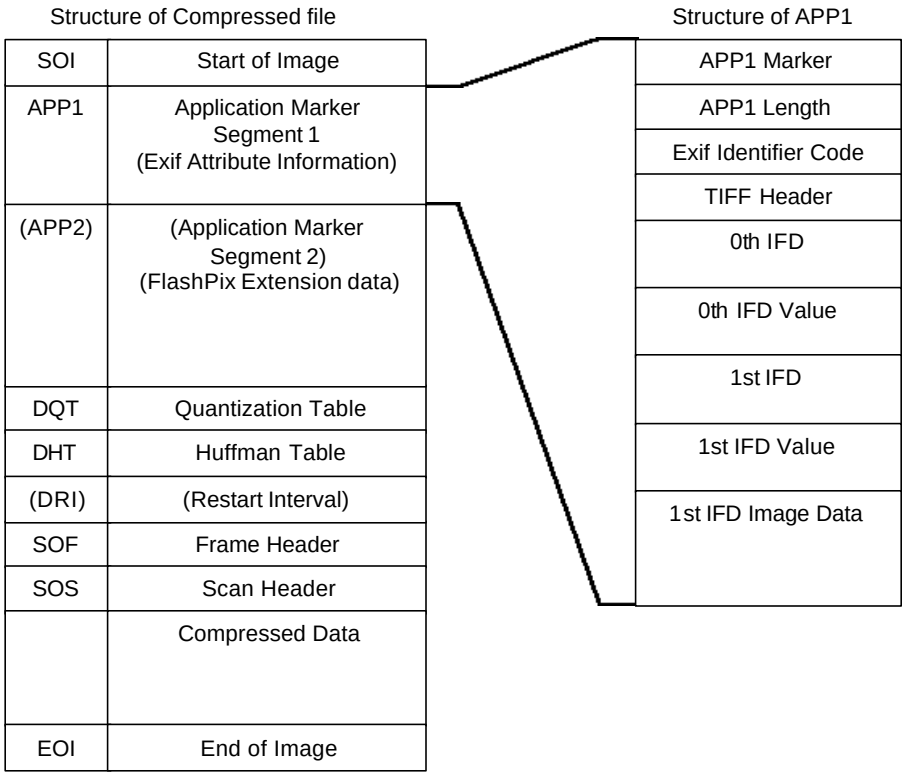

Fig. 6 Basic Structure of Compressed Data Files

Interoperability, APP1 consists of the APP1 marker, Exif identifier code, and the attribute information itself. The size of APP1 including all these elements must not exceed the 64 Kbytes specified in the JPEG standard.

Attribute information is stored in TIFF structure including a File Header, with a maximum of two IFD (0th IFD, 1st IFD). The 0th IFD records attribute information concerning the compressed image (primary image). The 1st IFD can be used to record a thumbnail image. For details see section 2.7.2.

APP2 consists of the APP2 marker, FPXR (FlashPix Ready) identifier code, and contents list for FlashPix extension recording, or stream data. A string of multiple APP2 marker segments can be used to record data exceeding 64 Kbytes. For details see section 2.7.3.

2.5.5. Basic Structure of Thumbnail Data

Thumbnail data is recorded in the 1st IFD similarly to primary images, using two existing image formats.

No limit is placed on the size of thumbnail images. Thumbnails are not mandatory, but it is recommended that they be recorded if possible, unless hardware or other restrictions preclude this.

Thumbnail data does not necessarily have to adopt the same data structure as that used for primary images. If, however, the primary images are recorded as uncompressed RGB data or as uncompressed YCbCr data, thumbnail images cannot be recorded as JPEG compressed data (see Table 2).

Table 2 Combinations of primary image and thumbnail data structures

		Primary Image	
		Uncompressed	Compressed
Thumbnail	Uncompressed	Possible	Possible
	Compressed	Not possible	Possible

When thumbnails are recorded in uncompressed format, they are to be recorded in the 1st IFD in conformance with Baseline TIFF Rev. 6.0 RGB Full Color Images or TIFF Rev. 6.0 Extensions YCbCr Images.

An Exif-specific recording method is used to record compressed thumbnails.

In this case the *Compression* tag value is set to "6" and tags in the 1st IFD (*JPEGInterchangeFormat*, *JPEGInterchangeFormatLength*) are used to designate the location and size. The images are recorded at the designated location as a JPEG stream (from SOI to EOI) conforming to the JPEG Baseline DCT format. No APPn marker, COM marker, nor restart marker is recorded in the JPEG stream (see Fig. 7). To avoid duplicate definitions, the 1st IFD is not used to record a tag indicating a TIFF image or information recorded elsewhere as a JPEG marker segment.

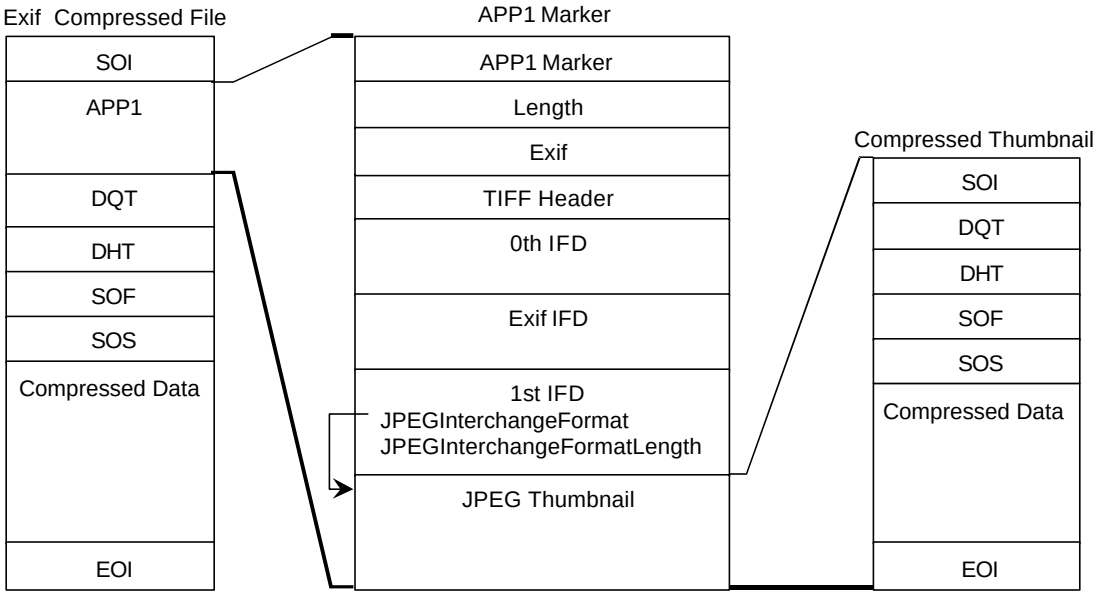

Fig. 7 Structure of Exif file with compressed thumbnail

2.6. Tags

2.6.1. Features of Attribute Information

RGB data conforms to Baseline TIFF Rev. 6.0 RGB Full Color Images, and YCbCr data to TIFF Rev. 6.0 Extensions YCbCr Images. Accordingly, the parts that follow the TIFF structure must be recorded in conformance to the TIFF standard. In addition to the attribute information indicated as mandatory in the TIFF standard, this Exif standard adds the TIFF optional tags that can be used in a DSC or other system, Exif-specific tags for recording DSC-specific attribute information, and GPS tags for recording position information. There are also Exif-original specifications not found in the TIFF standard for compressed recording of thumbnails.

Recording of compressed data differs from uncompressed data in the following respects:

- When the primary image data is recorded in compressed form, there is no tag indicating the primary image itself or its address (pointer),
- When thumbnail data is recorded in compressed form, address and size are designated using Exif-specific tags,
- Tags that duplicate information given in the JPEG Baseline are not recorded (for either primary images or thumbnails).
- Information relating to compression can be recorded using the tags for this purpose.

2.6.2. IFD Structure

The IFD used in this standard consists of a 2-byte count (number of fields), 12-byte field Interoperability arrays, and 4-byte offset to the next IFD, in conformance with TIFF Rev. 6.0.

Each of the 12-byte field Interoperability consists of the following four elements respectively.

Bytes 0-1	Tag
Bytes 2-3	Type
Bytes 4-7	Count
Bytes 8-11	Value Offset

Each element is explained briefly below. For details see TIFF Rev. 6.0.

Tag

Each tag is assigned a unique 2-byte number to identify the field. The tag numbers in the Exif 0th IFD and 1st IFD are all the same as the TIFF tag numbers.

Type

The following types are used in Exif:

1 = BYTE	An 8-bit unsigned integer.,
2 = ASCII	An 8-bit byte containing one 7-bit ASCII code. The final byte is terminated with NULL.,
3 = SHORT	A 16-bit (2-byte) unsigned integer,
4 = LONG	A 32-bit (4-byte) unsigned integer,
5 = RATIONAL	Two LONGs. The first LONG is the numerator and the second LONG expresses the denominator.,
7 = UNDEFINED	An 8-bit byte that can take any value depending on the field definition,
9 = SLONG	A 32-bit (4-byte) signed integer (2's complement notation),
10 = SRATIONAL	Two SLONGs. The first SLONG is the numerator and the second SLONG is the denominator.

Count

The number of values. It should be noted carefully that the count is not the sum of the bytes. In the case of one value of SHORT (16 bits), for example, the count is '1' even though it is 2 bytes.

Value Offset

This tag records the offset from the start of the TIFF header to the position where the value itself is recorded. In cases where the value fits in 4 bytes, the value itself is recorded. If the value is smaller than 4 bytes, the value is stored in the 4-byte area starting from the left, i.e., from the lower end of the byte offset area. For example, in big endian format, if the type is SHORT and the value is 1, it is recorded as 00010000.H.

Note that field Interoperability must be recorded in sequence starting from the smallest tag number. There is no stipulation regarding the order or position of tag value (Value) recording.

2.6.3. Exif-specific IFD

A. Exif IFD

Exif IFD is a set of tags for recording Exif-specific attribute information. It is pointed to by the offset from the TIFF header (Value Offset) indicated by an Exif private tag value.

Exif IFD Pointer

Tag = 34665 (8769.H)
Type = LONG
Count = 1
Default = none

A pointer to the Exif IFD. Interoperability, Exif IFD has the same structure as that of the IFD specified in TIFF. Ordinarily, however, it does not contain image data as in the case of TIFF.

B. GPS IFD

GPS IFD is a set of tags for recording GPS information. It is pointed to by the offset from the TIFF header (Value Offset) indicated by a GPS private tag value.

GPS Info IFD Pointer

Tag = 34853 (8825.H)
Type = LONG
Count = 1
Default = none

A pointer to the GPS Info IFD. The Interoperability structure of the GPS Info IFD, like that of Exif IFD, has no image data.

C. Interoperability IFD

Interoperability IFD is composed of tags which stores the information to ensure the Interoperability and pointed by the following tag located in Exif IFD.

Interoperability IFD Pointer

Tag = 40965 A005.H
Type = LONG
Count = 1
Default = None

The Interoperability structure of Interoperability IFD is same as TIFF defined IFD structure but does not contain the

image data characteristically compared with normal TIFF IFD.

2.6.4. TIFF Rev. 6.0 Attribute Information

Table 3 lists the attribute information used in Exif, including the attributes given as mandatory in Baseline TIFF Rev. 6.0 RGB Full Color Images and TIFF Rev. 6.0 Extensions YCbCr Images, as well as the optional TIFF tags used by DSC and other systems. The contents are explained below.

Table 3 TIFF Rev. 6.0 Attribute Information Used in Exif

Tag Name	Field Name	Tag ID		Type	Count
		Dec	Hex		
A. Tags relating to image data structure					
Image width	ImageWidth	256	100	SHORT or LONG	1
Image height	ImageLength	257	101	SHORT or LONG	1
Number of bits per component	BitsPerSample	258	102	SHORT	3
Compression scheme	Compression	259	103	SHORT	1
Pixel composition	PhotometricInterpretation	262	106	SHORT	1
Orientation of image	Orientation	274	112	SHORT	1
Number of components	SamplesPerPixel	277	115	SHORT	1
Image data arrangement	PlanarConfiguration	284	11C	SHORT	1
Subsampling ratio of Y to C	YCbCrSubSampling	530	212	SHORT	2
Y and C positioning	YCbCrPositioning	531	213	SHORT	1
Image resolution in width direction	XResolution	282	11A	RATIONAL	1
Image resolution in height direction	YResolution	283	11B	RATIONAL	1
Unit of X and Y resolution	ResolutionUnit	296	128	SHORT	1
B. Tags relating to recording offset					
Image data location	StripOffsets	273	111	SHORT or LONG	*S
Number of rows per strip	RowsPerStrip	278	116	SHORT or LONG	1
Bytes per compressed strip	StripByteCounts	279	117	SHORT or LONG	*S
Offset to JPEG SOI	JPEGInterchangeFormat	513	201	LONG	1
Bytes of JPEG data	JPEGInterchangeFormatLength	514	202	LONG	1
C. Tags relating to image data characteristics					
Transfer function	TransferFunction	301	12D	SHORT	3 * 256
White point chromaticity	WhitePoint	318	13E	RATIONAL	2
Chromaticities of primaries	PrimaryChromaticities	319	13F	RATIONAL	6
Color space transformation matrix coefficients	YCbCrCoefficients	529	211	RATIONAL	3
Pair of black and white reference values	ReferenceBlackWhite	532	214	RATIONAL	6
D. Other tags					
File change date and time	DateTime	306	132	ASCII	20
Image title	ImageDescription	270	10E	ASCII	Any
Image input equipment manufacturer	Make	271	10F	ASCII	Any
Image input equipment model	Model	272	110	ASCII	Any
Software used	Software	305	131	ASCII	Any
Person who created the image	Artist	315	13B	ASCII	Any
Copyright holder	Copyright	3432	8298	ASCII	Any

*S Chunky format: StripsPerImage

Planar format: SamplesPerImage * StripsPerImage

StripsPerImage = floor((ImageLength + RowsPerStrip -1)/ RowsPerStrip)

A. Tags relating to image data structure

ImageWidth

The number of columns of image data, equal to the number of pixels per row. In JPEG compressed data a JPEG marker is used instead of this tag.

Tag = 256 (100.H)

Type = SHORT or LONG

Count = 1

Default = none

ImageLength

The number of rows of image data. In JPEG compressed data a JPEG marker is used instead of this tag.

Tag = 257 (101.H)

Type = SHORT or LONG

Count = 1

Default = none

BitsPerSample

The number of bits per image component. In this standard each component of the image is 8 bits, so the value for this tag is 8. See also *SamplesPerPixel*. In JPEG compressed data a JPEG marker is used instead of this tag.

Tag = 258 (102.H)

Type = SHORT

Count = 3

Default = 8 8 8

Compression

The compression scheme used for the image data. When a primary image is JPEG compressed, this designation is not necessary and is omitted. When thumbnails use JPEG compression, this tag value is set to 6.

Tag = 259 (103.H)

Type = SHORT

Count = 1

Default = none

1 = uncompressed

6 = JPEG compression (thumbnails only)

Other = reserved

PhotometricInterpretation

The pixel composition. In JPEG compressed data a JPEG marker is used instead of this tag.

Tag = 262 (106.H)

Type = SHORT

Count = 1

Default = none

2 = RGB

6 = YCbCr

Other = reserved

Orientation

The image orientation viewed in terms of rows and columns.

Tag = 274 (112.H)

Type = SHORT

Count = 1

Default = 1

1 = The 0th row is at the visual top of the image, and the 0th column is the visual left-hand side.

2 = The 0th row is at the visual top of the image, and the 0th column is the visual right-hand side.

3 = The 0th row is at the visual bottom of the image, and the 0th column is the visual right-hand side.

4 = The 0th row is at the visual bottom of the image, and the 0th column is the visual left-hand side.

5 = The 0th row is the visual left-hand side of of the image, and the 0th column is the visual top.

6 = The 0th row is the visual right-hand side of of the image, and the 0th column is the visual top.

7 = The 0th row is the visual right-hand side of of the image, and the 0th column is the visual bottom.

8 = The 0th row is the visual left-hand side of of the image, and the 0th column is the visual bottom.

Other = reserved

SamplesPerPixel

The number of components per pixel. Since this standard applies to RGB and YCbCr images, the value set for this tag is 3. In JPEG compressed data a JPEG marker is used instead of this tag.

Tag = 277 (115.H)

Type = SHORT

Count = 1

Default = 3

PlanarConfiguration

Indicates whether pixel components are recorded in chunky or planar format. In JPEG compressed files a JPEG marker is used instead of this tag. If this field does not exist, the TIFF default of 1 (chunky) is assumed.

Tag = 284 (11C.H)

Type = SHORT

Count = 1

1 = chunky format

2 = planar format

Other = reserved

YCbCrSubSampling

The sampling ratio of chrominance components in relation to the luminance component. In JPEG compressed data a JPEG marker is used instead of this tag.

Tag = 530 (212.H)

Type = SHORT

Count = 2

[2, 1] = YCbCr4:2:2

[2, 2] = YCbCr4:2:0

Other = reserved

YCbCrPositioning

The position of chrominance components in relation to the luminance component. This field is designated only for JPEG compressed data or uncompressed YCbCr data. The TIFF default is 1 (centered); but when Y:Cb:Cr = 4:2:2 it is recommended in this standard that 2 (co-sited) be used to record data, in order to improve the image quality when viewed on TV systems. When this field does not exist, the reader shall assume the TIFF default. In the case of Y:Cb:Cr = 4:2:0, the TIFF default (centered) is recommended. If the reader does not have the capability of supporting both kinds of *YCbCrPositioning*, it shall follow the TIFF default regardless of the value in this field. It is preferable that readers be able to support both centered and co-sited positioning.

Tag = 531 (213.H)

Type = SHORT

Count = 1

Default = 1

1 = centered

2 = co-sited

Other = reserved

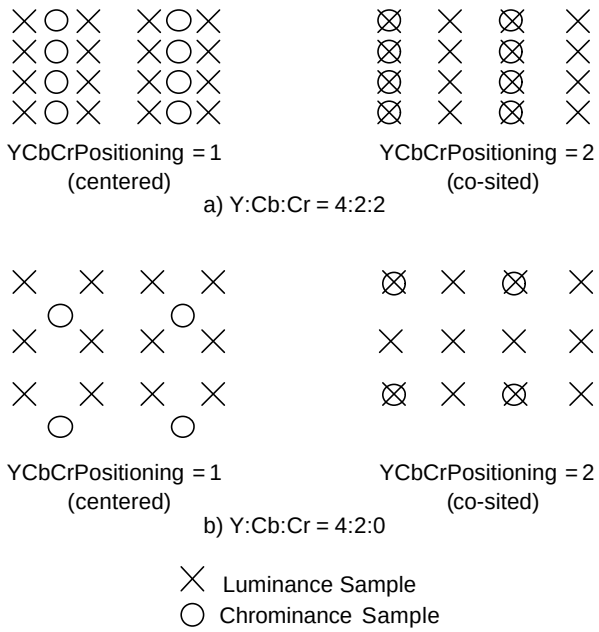

Fig. 8 YCbCrPositioning

XResolution

The number of pixels per *ResolutionUnit* in the *ImageWidth* direction. When the image resolution is unknown, 72 [dpi] is designated.

Tag = 282 (11A.H)

Type = RATIONAL

Count = 1

Default = 72

YResolution

The number of pixels per *ResolutionUnit* in the *ImageLength* direction. The same value as *XResolution* is designated.

Tag = 283 (11B.H)

Type = RATIONAL

Count = 1

Default = 72

ResolutionUnit

The unit for measuring *XResolution* and *YResolution*. The same unit is used for both *XResolution* and *YResolution*. If the image resolution in unknown, 2 (inches) is designated.

Tag = 296 (128.H)

Type = SHORT

Count = 1

Default = 2

2 = inches

3 = centimeters

Other = reserved

B. Tags relating to recording offset

StripOffsets

For each strip, the byte offset of that strip. It is recommended that this be selected so the number of strip bytes does not exceed 64 Kbytes. With JPEG compressed data this designation is not needed and is omitted. See also *RowsPerStrip* and *StripByteCounts*.

Tag	=	273 (111.H)	
Type	=	SHORT or LONG	
Count	=	StripsPerImage	(when PlanarConfiguration = 1)
	=	SamplesPerPixel * StripsPerImage	(when PlanarConfiguration = 2)
Default	=	none	

RowsPerStrip

The number of rows per strip. This is the number of rows in the image of one strip when an image is divided into strips. With JPEG compressed data this designation is not needed and is omitted. See also *RowsPerStrip* and *StripByteCounts*.

Tag

Tag	=	278 (116.H)
Type	=	SHORT or LONG
Count	=	1
Default	=	none

StripByteCounts

The total number of bytes in each strip. With JPEG compressed data this designation is not needed and is omitted.

Tag	=	279 (117.H)	
Type	=	SHORT or LONG	
Count	=	StripsPerImage	(when PlanarConfiguration = 1)
		SamplesPerPixel * StripsPerImage	(when PlanarConfiguration = 2)
Default	=	none	

JPEGInterchangeFormat

The offset to the start byte (SOI) of JPEG compressed thumbnail data. This is not used for primary image JPEG data.

Tag	=	513 (201.H)
Type	=	LONG
Default	=	none

JPEGInterchangeFormatLength

The number of bytes of JPEG compressed thumbnail data. This is not used for primary image JPEG data. JPEG thumbnails are not divided but are recorded as a continuous JPEG bitstream from SOI to EOI. APPn and COM markers should not be recorded. Compressed thumbnails must be recorded in no more than 64 Kbytes, including all other data to be recorded in APP1.

Tag	=	514 (202.H)
Type	=	LONG
Default	=	none

C. Tags Relating to Image Data Characteristics

TransferFunction

A transfer function for the image, described in tabular style. Normally this tag is not necessary, since color space is specified in the color space information tag (*ColorSpace*).

Tag	=	301 (12D.H)
Type	=	SHORT
Count	=	3 * 256
Default	=	none

WhitePoint

The chromaticity of the white point of the image. Normally this tag is not necessary, since color space is specified in the color space information tag (*ColorSpace*).

Tag	=	318 (13E.H)
Type	=	RATIONAL
Count	=	2
Default	=	none

PrimaryChromaticities

The chromaticity of the three primary colors of the image. Normally this tag is not necessary, since color space is specified in the color space information tag (*ColorSpace*).

Tag	=	319 (13F.H)
Type	=	RATIONAL
Count	=	6
Default	=	none

YCbCrCoefficients

The matrix coefficients for transformation from RGB to YCbCr image data. No default is given in TIFF; but here the value given in Appendix E, "Color Space Guidelines," is used as the default. The color space is declared in a color space information tag, with the default being the value that gives the optimal image characteristics Interoperability this condition.

Tag	=	529 (211.H)
Type	=	RATIONAL
Count	=	3
Default	=	See Appendix E.

ReferenceBlackWhite

The reference black point value and reference white point value. No defaults are given in TIFF, but the values below are given as defaults here. The color space is declared in a color spaœ information tag, with the default being the value that gives the optimal image characteristics Interoperability these conditions.

Tag	=	532 (214.H)	
Type	=	RATIONAL	
Count	=	6	
Default	=	[0, 255, 0, 255, 0, 255]	(when PhotometricInterpretation is RGB)
		[0, 255, 0, 128, 0, 128]	(when PhotometricInterpretation is YCbCr)

D. Other Tags

DateTime

The date and time of image creation. In this standard it is the date and time the file was changed. The format is "YYYY:MM:DD HH:MM:SS" with time shown in 24-hour format, and the date and time separated by one blank character [20.H]. When the date and time are unknown, all the character spaces except colons (":") may be filled with blank characters, or else the Interoperability field may be filled with blank characters. The character string length is 20 bytes including NULL for termination. When the field is left blank, it is treated as unknown.

Tag = 306 (132.H)
Type = ASCII
Count = 20
Default = none

ImageDescription

A character string giving the title of the image. It may be a comment such as "1988 company picnic" or the like. Two-byte character codes cannot be used. When a 2-byte code is necessary, the Exif Private tag *UserComment* is to be used.

Tag = 270 (10E.H)
Type = ASCII

Count = Any
Default = none

Make

The manufacturer of the recording equipment. This is the manufacturer of the DSC, scanner, video digitizer or other equipment that generated the image. When the field is left blank, it is treated as unknown.

Tag = 271 (10F.H)
Type = ASCII
Count = Any
Default = none

Model

The model name or model number of the equipment. This is the model name of number of the DSC, scanner, video digitizer or other equipment that generated the image. When the field is left blank, it is treated as unknown.

Tag = 272 (110.H)
Type = ASCII

Count = Any

Default = none

Software

This tag records the name and version of the software or firmware of the camera or image input device used to generate the image. The detailed format is not specified, but it is recommended that the example shown below be followed. When the field is left blank, it is treated as unknown.

Ex.) "Exif Software Version 1.00a"

Tag = 305 (131h)

Type = ASCII

Count = Any

Default = none

Artist

This tag records the name of the camera owner, photographer or image creator. The detailed format is not specified, but it is recommended that the information be written as in the example below for ease of Interoperability. When the field is left blank, it is treated as unknown.

Ex.) "Camera owner, John Smith; Photographer, Michael Brown; Image creator, Ken James"

Tag = 315 (13Bh)

Type = ASCII

Count = Any

Default = none

Copyright

Copyright information. In this standard the tag is used to indicate both the photographer and editor copyrights. It is the copyright notice of the person or organization claiming rights to the image. The Interoperability copyright statement including date and rights should be written in this field; e.g., "Copyright, John Smith, 19xx. All rights reserved." In this standard the field records both the photographer and editor copyrights, with each recorded in a separate part of the statement. When there is a clear distinction between the photographer and editor copyrights, these are to be written in the order of photographer followed by editor copyright, separated by NULL (in this case, since the statement also ends with a NULL, there are two NULL codes) (see example 1). When only the photographer copyright is given, it is terminated by one NULL code (see example 2). When only the editor copyright is given, the photographer copyright part consists of one space followed by a terminating NULL code, then the editor copyright is given (see example 3). When the field is left blank, it is treated as unknown.

Ex. 1) When both the photographer copyright and editor copyright are given.

Photographer copyright + NULL[00.H] + editor copyright + NULL[00.H]

Ex. 2) When only the photographer copyright is given.

Photographer copyright + NULL[00.H]

Ex. 3) When only the editor copyright is given.

Space[20.H]+ NULL[00.H] + editor copyright + NULL[00.H]

Tag	=	33432 (8298.H)
Type	=	ASCII
Count	=	Any
Default	=	none

2.6.5. Exif IFD Attribute Information

The attribute information (field names and codes) recorded in the Exif IFD is given in Table 4 and Table 5 followed by an explanation of the contents.

Table 4 Exif IFD Attribute Information (1)

Tag Name	Field Name	Tag ID		Type	Count
		Dec	Hex		
A. Tags Relating to Version					
Exif version	ExifVersion	36864	9000	UNDEFINED	4
Supported FlashPix version	FlashPixVersion	40960	A000	UNDEFINED	4
B. Tag Relating to Image Data Characteristics					
Color space information	ColorSpace	40961	A001	SHORT	1
C. Tags Relating to Image Configuration					
Meaning of each component	ComponentsConfiguration	37121	9101	UNDEFINED	4
Image compression mode	CompressedBitsPerPixel	37122	9102	RATIONAL	1
Valid image width	PixelXDimension	40962	A002	SHORT or LONG	1
Valid image height	PixelYDimension	40963	A003	SHORT or LONG	1
D. Tags Relating to User Information					
Manufacturer notes	MakerNote	37500	927C	UNDEFINED	Any
User comments	UserComment	37510	9286	UNDEFINED	Any
E. Tag Relating to Related File Information					
Related audio file	RelatedSoundFile	40964	A004	ASCII	13
F. Tags Relating to Date and Time					
Date and time of original data generation	DateTimeOriginal	36867	9003	ASCII	20
Date and time of digital data generation	DateTimeDigitized	36868	9004	ASCII	20
DateTime subseconds	SubSecTime	37520	9290	ASCII	Any
DateTimeOriginal subseconds	SubSecTimeOriginal	37521	9291	ASCII	Any
DateTimeDigitized subseconds	SubSecTimeDigitized	37522	9292	ASCII	Any
G. Tags Relating to Picture-Taking Conditions					
See Table 5					
H. Tags Relating to Date and Time					
Pointer of Interoperability IFD	Interoperability IFD Pointer	40965	A005	LONG	1

Table 5 Exif IFD Attribute Information (2)

G. Tags Relating to Picture-Taking Conditions					
Exposure time	ExposureTime	33434	829A	RATIONAL	1
F number	FNumber	33437	829D	RATIONAL	1
Exposure program	ExposureProgram	34850	8822	SHORT	1
Spectral sensitivity	SpectralSensitivity	34852	8824	ASCII	Any
ISO speed rating	ISOSpeedRatings	34855	8827	SHORT	Any
Optoelectric conversion factor	OECF	34856	8828	UNDEFINED	Any
Shutter speed	ShutterSpeedValue	37377	9201	SRATIONAL	1
Aperture	ApertureValue	37378	9202	RATIONAL	1
Brightness	BrightnessValue	37379	9203	SRATIONAL	1
Exposure bias	ExposureBiasValue	37380	9204	SRATIONAL	1
Maximum lens aperture	MaxApertureValue	37381	9205	RATIONAL	1
Subject distance	SubjectDistance	37382	9206	RATIONAL	1
Metering mode	MeteringMode	37383	9207	SHORT	1
Light source	LightSource	37384	9208	SHORT	1
Flash	Flash	37385	9209	SHORT	1
Lens focal length	FocalLength	37386	920A	RATIONAL	1
Flash energy	FlashEnergy	41483	A20B	RATIONAL	1
Spatial frequency response	SpatialFrequencyResponse	41484	A20C	UNDEFINED	Any
Focal plane X resolution	FocalPlaneXResolution	41486	A20E	RATIONAL	1
Focal plane Y resolution	FocalPlaneYResolution	41487	A20F	RATIONAL	1
Focal plane resolution unit	FocalPlaneResolutionUnit	41488	A210	SHORT	1
Subject location	SubjectLocation	41492	A214	SHORT	2
Exposure index	ExposureIndex	41493	A215	RATIONAL	1
Sensing method	SensingMethod	41495	A217	SHORT	1
File source	FileSource	41728	A300	UNDEFINED	1
Scene type	SceneType	41729	A301	UNDEFINED	1
CFA pattern	CFAPattern	41730	A302	UNDEFINED	Any

A. Tags Relating to Version

ExifVersion

The version of this standard supported. Nonexistence of this field is taken to mean nonconformance to the standard (see section 2.2). Conformance to this standard is indicated by recording "0210" as 4-byte ASCII. Since the type is UNDEFINED, there is no NULL for termination.

Tag = 36864 (9000.H)

Type = UNDEFINED

Count = 4

Default = "0210"

FlashPixVersion

The FlashPix format version supported by a FPXR file. If the FPXR function supports FlashPix format Ver. 1.0, this is indicated similarly to *ExifVersion* by recording "0100" as 4-byte ASCII. Since the type is UNDEFINED, there is no NULL for termination.

Tag = 40960(A000.H)

Type = UNDEFINED

Count = 4

Default = "0100"

0100 = FlashPix Format Version 1.0

Other = reserved

B. Tag Relating to Color Space

ColorSpace

The color space information tag (*ColorSpace*) is always recorded as the color space specifier.

Normally sRGB (=1) is used to define the color space based on the PC monitor conditions and environment. If a color space other than sRGB is used, Uncalibrated (=FFFF.H) is set. Image data recorded as Uncalibrated can be treated as sRGB when it is converted to FlashPix. On sRGB see Appendix E.

Tag = 40961 (A001.H)

Type = SHORT

Count = 1

1	=	sRGB
FFFF.H	=	Uncalibrated
Other	=	reserved

.

C. Tags Relating to Image Configuration

PixelXDimension

Information specific to compressed data. When a compressed file is recorded, the valid width of the meaningful image must be recorded in this tag, whether or not there is padding data or a restart marker. This tag should not exist in an uncompressed file. For details see section 2.8.1 and Appendix F.

Tag = 40962 (A002.H)
Type = SHORT or LONG
Count = 1
Default = none

PixelYDimension

Information specific to compressed data. When a compressed file is recorded, the valid height of the meaningful image must be recorded in this tag, whether or not there is padding data or a restart marker. This tag should not exist in an uncompressed file. For details see section 2.8.1 and Appendix F. Since data padding is unnecessary in the vertical direction, the number of lines recorded in this valid image height tag will in fact be the same as that recorded in the SOF.

Tag = 40963 (A003.H)
Type = SHORT of LONG
Count = 1

ComponentsConfiguration

Information specific to compressed data. The channels of each component are arranged in order from the 1st component to the 4th. For uncompressed data the data arrangement is given in the *PhotometricInterpretation* tag. However, since *PhotometricInterpretation* can only express the order of Y,Cb and Cr, this tag is provided for cases when compressed data uses components other than Y, Cb, and Cr and to enable support of other sequences.

Tag = 37121 (9101.H)
Type = UNDEFINED
Count = 4
Default = 4 5 6 0 (if RGB uncompressed)
1 2 3 0 (other cases)

0 = does not exist
1 = Y
2 = Cb
3 = Cr
4 = R
5 = G

6 = B

Other = reserved

CompressedBitsPerPixel

Information specific to compressed data. The compression mode used for a compressed image is indicated in unit bits per pixel.

Tag = 37122 (9102.H)

Type = RATIONAL

Count = 1

Default = none

D. Tags Relating to User Information

MakerNote

A tag for manufacturers of Exif writers to record any desired information. The contents are up to the manufacturer.

Tag = 37500 (927C.H)

Type = UNDEFINED

Count = Any

Default = none

UserComment

A tag for Exif users to write keywords or comments on the image besides those in *ImageDescription*, and without the character code limitations of the *ImageDescription* tag.

Tag = 37510 (9286.H)

Type = UNDEFINED

Count = Any

Default = none

The character code used in the *UserComment* tag is identified based on an ID code in a fixed 8-byte area at the start of the tag data area. The unused portion of the area is padded with NULL ("00.H"). ID codes are assigned by means of registration. The designation method and references for each character code are given in Table 6 . The value of Count N is determined based on the 8 bytes in the character code area and the number of bytes in the user comment part. Since the TYPE is not ASCII, NULL termination is not necessary (see Fig. 9).

Table 6 Character Codes and their Designation

Character Code	Code Designation (8 Bytes)	References
ASCII	41.H, 53.H, 43.H, 49.H, 49.H, 00.H, 00.H, 00.H	ITU-T T.50 IA5[x]
JIS	4A.H, 49.H, 53.H, 00.H, 00.H, 00.H, 00.H, 00.H	JIS X0208-1990[xi]
Unicode	55.H, 4E.H, 49.H, 43.H, 4F.H, 44.H, 45.H, 00.H	Unicode Standard [xii]
Undefined	00.H, 00.H, 00.H, 00.H, 00.H, 00.H, 00.H, 00.H	Undefined

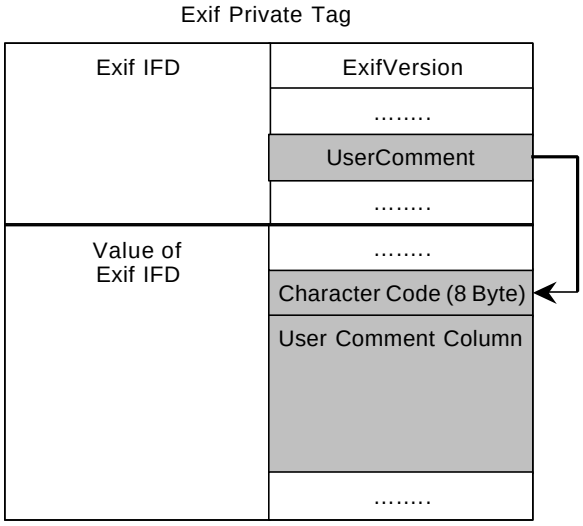

Fig. 9 User Comment Tag

The ID code for the *UserComment* area may be a Defined code such as JIS or ASCII, or may be Undefined. The Undefined name is *UndefinedText*, and the ID code is filled with 8 bytes of all "NULL" ("00.H"). An Exif reader that reads the *UserComment* tag must have a function for determining the ID code. This function is not required in Exif readers that do not use the *UserComment* tag (see Table 7).

Table 7 Implementation of Defined and Undefined Character Codes

ID Code	Exif Reader Implementation
Defined (JIS, ASCII, etc.)	Determines the ID code and displays it in accord with the reader capability.
Undefined (all NULL)	Depends on the localized PC in each country. (If a character code is used for which there is no clear specification like Shift-JIS in Japan, Undefined is used.) Although the possibility of unreadable characters exists, display of these characters is left as a matter of reader implementation.

When a *UserComment* area is set aside, it is recommended that the ID code be ASCII and that the following user comment part be filled with blank characters [20.H].

E. Tag Relating to Related File

RelatedSoundFile

This tag is used to record the name of an audio file related to the image data. The only relational information recorded here is the Exif audio file name and extension (an ASCII string consisting of 8 characters + '.' + 3 characters). The path is not recorded. Stipulations on audio are given in section 3.6.3. File naming conventions are given in section 3.7.1.

When using this tag, audio files must be recorded in conformance to the Exif audio format. Writers are also allowed to store the data such as Audio within APP2 as FlashPix extension stream data.

Audio files must be recorded in conformance to the Exif audio format.

The mapping of Exif image files and audio files is done in any of the three ways shown in Table 8. If multiple files are mapped to one file as in [2] or [3] of this table, the above format is used to record just one audio file name. If there are multiple audio files, the first recorded file is given.

In the case of [3] in Table 8, for example, for the Exif image file "DSC00001.JPG" only "SND00001.WAV" is given as the related Exif audio file.

When there are three Exif audio files "SND00001.WAV", "SND00002.WAV" and "SND00003.WAV", the Exif image file name for each of them, "DSC00001.JPG," is indicated. By combining multiple relational information, a variety of playback possibilities can be supported. The method of using relational information is left to the implementation on the playback side. Since this information is an ASCII character string, it is terminated by NULL.

Table 8 Mapping between Image and Audio Files

	Relationship	Exif Image File	Exif Audio File
[1]	1 to 1	DSC00001.JPG	SND00001.WAV
[2]	Plural to 1	DSC00001.JPG DSC00002.JPG DSC00003.JPG	SND00001.WAV
[3]	1 to plural	DSC00001.JPG	SND00001.WAV SND00002.WAV SND00003.WAV

When this tag is used to map audio files, the relation of the audio file to image data must also be indicated on the audio file end.

Tag = 40964 (A004.H)

Type = ASCII

Count = 13

Default = none

F. Tags Relating to Date and Time

DateTimeOriginal

The date and time when the original image data was generated. For a DSC the date and time the picture was taken are recorded. The format is "YYYY:MM:DD HH:MM:SS" with time shown in 24-hour format, and the date and time separated by one blank character [20.H]. When the date and time are unknown, all the character spaces except colons (":") may be filled with blank characters, or else the Interoperability field may be filled with blank characters. The character string length is 20 bytes including NULL for termination. When the field is left blank, it is treated as unknown.

Tag	=	36867 (9003.H)
Type	=	ASCII
Count	=	20
Default	=	none

DateTimeDigitized

The date and time when the image was stored as digital data. If, for example, an image was captured by DSC and at the same time the file was recorded, then the *DateTimeOriginal* and *DateTimeDigitized* will have the same contents. The format is "YYYY:MM:DD HH:MM:SS" with time shown in 24-hour format, and the date and time separated by one blank character [20.H]. When the date and time are unknown, all the character spaces except colons (":") may be filled with blank characters, or else the Interoperability field may be filled with blank characters. The character string length is 20 bytes including NULL for termination. When the field is left blank, it is treated as unknown.

Tag	=	36868 (9004.H)
Type	=	ASCII
Count	=	20
Default	=	none

SubsecTime

A tag used to record fractions of seconds for the *DateTime* tag.

Tag	=	37520 (9290.H)
Type	=	ASCII
Count	=	Any
Default	=	none

SubsecTimeOriginal

A tag used to record fractions of seconds for the *DateTimeOriginal* tag.

Tag = 37521 (9291.H)

Type = ASCII

N = Any

Default = none

SubsecTimeDigitized

A tag used to record fractions of seconds for the *DateTimeDigitized* tag.

Tag = 37522 (9292.H)

Type = ASCII

N = Any

Default = none

Note: Recording subsecond data (*SubsecTime, SubsecTimeOriginal, SubsecTimeDigitized*)

The tag type is ASCII and the string length including NULL is variable length. When the number of valid digits is up to the second decimal place, the subsecond value goes in the Value position. When it is up to four decimal places, an address value is Interoperability, with the subsecond value put in the location pointed to by that address. (Since the count of ASCII type field Interoperability is a value that includes NULL, when the number of valid digits is up to four decimal places the count is 5, and the offset value goes in the Value Offset field. See section 2.6.2.) Note that the subsecond tag differs from the *DateTime* tag and other such tags already defined in TIFF Rev. 6.0, and that both are recorded in the Exif IFD.

Ex.: September 9, 1998, 9:15:30.130

(the number of valid digits is up to the third decimal place)

DateTime 1996:09:01 09:15:30 [NULL]

SubSecTime 130 [NULL]

If the string length is longer than the number of valid digits, the digits are aligned with the start of the area and the rest is filled with blank characters [20.H]. If the subsecond data is unknown, the Interoperability area can be filled with blank characters.

Examples when subsecond data is 0.130 seconds:

Ex. 1) '1','3','0',[NULL]

Ex. 2) '1','3','0',[20.H],[NULL]

Ex. 3) '1','3','0', [20.H], [20.H], [20.H], [20.H], [20.H], [NULL]

Example when subsecond data is unknown:

Ex. 4) [20.H], [20.H], [20.H], [20.H], [20.H], [20.H], [20.H], [20.H], [NULL]

G. Tags Relating to Picture-Taking Conditions

ExposureTime

Exposure time, given in seconds (sec).

Tag = 33434 (829A.H)

Type = RATIONAL

Count = 1

Default = none

ShutterSpeedValue

Shutter speed. The unit is the APEX (Additive System of Photographic Exposure) setting (see Appendix C).

Tag = 37377 (9201.H)

Type = SRATIONAL

Count = 1

Default = none

ApertureValue

The lens aperture. The unit is the APEX value.

Tag = 37378 (9202.H)

Type = RATIONAL

Count = 1

Default = none

BrightnessValue

The value of brightness. The unit is the APEX value. Ordinarily it is given in the range of -99.99 to 99.99.

Tag = 37379 (9203.H)

Type = SRATIONAL

Count = 1

Default = none

ExposureBiasValue

The exposure bias. The unit is the APEX value. Ordinarily it is given in the range of –99.99 to 99.99.

Tag = 37380 (9204.H)

Type = SRATIONAL

Count = 1

Default = none

MaxApertureValue

The smallest F number of the lens. The unit is the APEX value. Ordinarily it is given in the range of 00.00 to 99.99, but it is not limited to this range.

Tag = 37381 (9205.H)

Type = RATIONAL

Count = 1

Default = none

SubjectDistance

The distance to the subject, given in meters.

Tag = 37382 (9206.H)

Type = RATIONAL

Count = 1

Default = none

MeteringMode

The metering mode.

Tag = 37383 (9207.H)

Type = SHORT

Count = 1

Default = 0

0	=	unknown
1	=	Average
2	=	CenterWeightedAverage
3	=	Spot
4	=	MultiSpot
5	=	Pattern
6	=	Partial
7 to 254	=	reserved
255	=	other

LightSource

The kind of light source.

Tag = 37384 (9208.H)

Type = SHORT

Count = 1

Default = 0

0	=	unknown
1	=	Daylight
2	=	Fluorescent
3	=	Tungsten
17	=	Standard light A
18	=	Standard light B
19	=	Standard light C
20	=	D55
21	=	D65
22	=	D75
23 to 254	=	reserved
255	=	other

Flash

This tag is recorded when an image is taken using a strobe light (flash). Bit 0 indicates the flash firing status, and bits 1 and 2 indicate the flash return status (see Fig. 10).

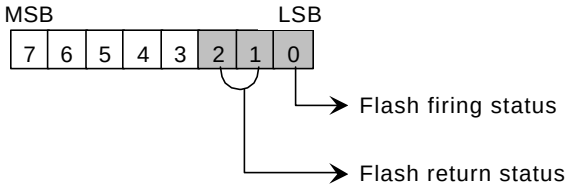

Fig. 10 Bit Coding of the Flash Tag

Tag	=	37385 (9209.H)
Type	=	SHORT
Count	=	1

Values for bit 0 indicating whether the flash fired.

0b	=	Flash did not fire.
1b	=	Flash fired.

Values for bits 1 and 2 indicating the status of returned light.

00b	=	No strobe return detection function
01b	=	reserved
10b	=	Strobe return light not detected.
11b	=	Strobe return light detected.

Resulting Flash tag values.

0000.H	=	Flash did not fire.
0001.H	=	Flash fired.
0005.H	=	Strobe return light not detected.

0007.H = Strobe return light detected.

Other = reserved

FocalLength

The actual focal length of the lens, in mm. Conversion is not made to the focal length of a 35 mm film camera.

Tag = 37386 (920A.H)

Type = RATIONAL

Count = 1

Default = none

FNumber

The F number.

Tag = 33437 (829D.H)

Type = RATIONAL

Count = 1

Default = none

ExposureProgram

The class of the program used by the camera to set exposure when the picture is taken. The tag values are as follows.

Tag = 34850 (8822.H)

Type = SHORT

Count = 1

Default = 0

0 = Not defined

1 = Manual

2 = Normal program

3 = Aperture priority

4 = Shutter priority

5 = Creative program (biased toward depth of field)

6 = Action program (biased toward fast shutter speed)

7 = Portrait mode (for closeup photos with the background out of focus)

8 = Landscape mode (for landscape photos with the background in focus)

9 to 255 = reserved

SpectralSensitivity

Indicates the spectral sensitivity of each channel of the camera used. The tag value is an ASCII string compatible with the standard[xiii] developed by the ASTM Technical committee.

Tag = 34852 (8824.H)

Type = ASCII

Count = Any

Default = none

ISOSpeedRatings

Indicates the ISO Speed and ISO Latitude of the camera or input device as specified in ISO 12232[xiv].

Tag = 34855 (8827.H)

Type = SHORT

Count = Any

Default = none

OECF

Indicates the Opto-Electoric Conversion Function (OECF) specified in ISO 14524[xv]. *OECF* is the relationship between the camera optical input and the image values.

Tag = 34856 (8828.H)

Type = UNDEFINED

Count = ANY

Default = none

When this tag records an *OECF* of m rows and n columns, the values are as in Fig. 11.

Length	Type	Meaning
2 2	SHORT SHORT	Columns = n Rows = m
Any	ASCII	0th column item name (NULL terminated)
:	:	:
Any	ASCII	n-1th column item name (NULL terminated)
8	SRATIONAL	OECF value [0,0]
:	:	:
8	SRATIONAL	OECF value [n-1,0]
8	SRATIONAL	OECF value [0,m-1]
:	:	:
8	SRATIONAL	OECF value [n-1,m-1]

Fig. 11 OECF Description

Table 9 gives a simple example.

Table 9 Example of Exposure and RGB Output Level

Camera log Aperture	R Output Level	G Output Level	B Output Level
-3.0	10.2	12.4	8.9
-2.0	48.1	47.5	48.3
-1.0	150.2	152.0	149.8

FlashEnergy

Indicates the strobe energy at the time the image is captured, as measured in Beam Candle Power Seconds (BCPS).

Tag = 41483 (A20B.H)

Type = RATIONAL

Count = 1

Default = none

SpatialFrequencyResponse

This tag records the camera or input device spatial frequency table and SFR values in the direction of image width, image height, and diagonal direction, as specified in ISO 12233[xvi].

Tag = 41484 (A20CH)

Type = UNDEFINED

Count = ANY

Default = none

When the spatial frequency response for m rows and n columns is recorded, the values are as shown in Fig. 12.

Length	Type	Meaning
2	SHORT	Columns = n
2	SHORT	Rows = m
Any	ASCII	0th column item name (NULL terminated)
: Any	: ASCII	: n-1th column item name (NULL terminated)
8	RATIONAL	SFR value [0,0]
:	:	:
8	RATIONAL	SFR value [n-1,0]
8	RATIONAL	SFR value [0,m-1]
:	:	:
8	RATIONAL	SFR value [n-1,m-1]

Fig. 12 Spatial Frequency Response Description

Table 10 gives a simple example.

Table 10 Example of Spatial Frequency Response

Spatial Frequency (lw/ph)	Along Image Width	Along Image Height
	1.00	1.00
0.2	0.90	0.95
0.3	0.80	0.85

FocalPlaneXResolution

Indicates the number of pixels in the image width (X) direction per *FocalPlaneResolutionUnit* on the camera focal plane.

Tag = 41486 (A20E.H)

Type = RATIONAL

Count = 1

Default = none

FocalPlaneYResolution

Indicates the number of pixels in the image height (Y) direction per *FocalPlaneResolutionUnit* on the camera focal plane.

Tag = 41487 (A20F.H)

Type = RATIONAL

Count = 1

Default = none

FocalPlaneResolutionUnit

Indicates the unit for measuring *FocalPlaneXResolution* and *FocalPlaneYResolution*. This value is the same as the *ResolutionUnit*.

Tag = 41488 (A210.H)

Type = SHORT

Count = 1

Default = 2 (inch)

Note on use of tags concerning focal plane resolution

These tags record the actual focal plane resolutions of the main image which is written as a file after processing instead of the pixel resolution of the image sensor in the camera. It should be noted carefully that the data from the image sensor is resampled.

These tags are used at the same time as a FocalLength tag when the angle of field of the recorded image is to be calculated precisely.

SubjectLocation

Indicates the location of the main subject in the scene. The value of this tag represents the pixel at the center of the main subject relative to the left edge, prior to rotation processing as per the *Rotation* tag. The first value indicates the X column number and second indicates the Y row number.

Tag = 41492 (A214.H)

Type = SHORT

Count = 2

Default = none

ExposureIndex

Indicates the exposure index selected on the camera or input device at the time the image is captured.

Tag = 41493 (A215.H)

Type = RATIONAL

Count = 1

Default = none

SensingMethod

Indicates the image sensor type on the camera or input device. The values are as follows.

Tag = 41495 (A217.H)

Type = SHORT

Count = 1

Default = none

1 = Not defined

2 = One-chip color area sensor

3 = Two-chip color area sensor

4 = Three-chip color area sensor

5 = Color sequential area sensor

7 = Trilinear sensor

8 = Color sequential linear sensor

Other = reserved

FileSource

Indicates the image source. If a DSC recorded the image, this tag value of this tag always be set to 3, indicating that the image was recorded on a DSC.

Tag = 41728 (A300.H)

Type = UNDEFINED

Count = 1

Default = 3

3 = DSC

Other = reserved

SceneType

Indicates the type of scene. If a DSC recorded the image, this tag value must always be set to 1, indicating that the image was directly photographed.

Tag = 41729 (A301.H)

Type = UNDEFINED

Count = 1

Default = 1

1 = A directly photographed image

Other = reserved

CFAPattern

Indicates the color filter array (CFA) geometric pattern of the image sensor when a one-chip color area sensor is used. It does not apply to all sensing methods.

Tag = 41730 (A302.H)

Type = UNDEFINED

Count = ANY

Fig. 13 shows how a CFA pattern is recorded for a one-chip color area sensor when the color filter array is repeated in m x n (vertical x lateral) pixel units.

Length	Type	Meaning
2	SHORT	Horizontal repeat pixel unit = n
2	SHORT	Vertical repeat pixel unit = m
1	BYTE	CFA value [0.0]
:	:	:
1	BYTE	CFA value [n-1.0]
1	BYTE	CFA value [0.m-1]
:	:	:
1	BYTE	CFA value [n-1.m-1]

Fig. 13 CFA Pattern Description

The relation of color filter color to CFA value is shown in Table 11.

Table 11 Color Filter Color and CFA Value

Filter Color	CFA Value
RED GREEN	00.H 01.H
BLUE	02.H
CYAN	03.H
MAGENTA	04.H
YELLOW	05.H
WHITE	06.H

For example, when the CFA pattern values are {0002.H, 0002.H, 01.H, 00.H, 02.H, 01.H}, the color filter array is as shown in Fig. 14.

G	R	G	R	……
B	G	B	G	……
G	R	G	R	……
B	G	B	G	……
:	:	:	:	

Fig. 14 Color Filter Array

2.6.6. GPS Attribute Information

The attribute information (field names and codes) recorded in the GPS Info IFD is given in Table 12, followed by an explanation of the contents.

Table 12 GPS Attribute Information

Tag Name	Field Name	Tag ID Dec	Tag ID Hex	Type	Count
A. Tags Relating to GPS					
GPS tag version	GPSVersionID	0	0	BYTE	4
North or South Latitude	GPSLatitudeRef	1	1	ASCII	2
Latitude	GPSLatitude	2	2	RATIONAL	3
East or West Longitude	GPSLongitudeRef	3	3	ASCII	2
Longitude	GPSLongitude	4	4	RATIONAL	3
Altitude reference	GPSAltitudeRef	5	5	BYTE	1
Altitude	GPSAltitude	6	6	RATIONAL	1
GPS time (atomic clock)	GPSTimeStamp	7	7	RATIONAL	3
GPS satellites used for measurement	GPSSatellites	8	8	ASCII	Any
GPS receiver status	GPSStatus	9	9	ASCII	2
GPS measurement mode	GPSMeasureMode	10	A	ASCII	2
Measurement precision	GPSDOP	11	B	RATIONAL	1
Speed unit	GPSSpeedRef	12	C	ASCII	2
Speed of GPS receiver	GPSSpeed	13	D	RATIONAL	1
Reference for direction of movement	GPSTrackRef	14	E	ASCII	2
Direction of movement	GPSTrack	15	F	RATIONAL	1
Reference for direction of image	GPSImgDirectionRef	16	10	ASCII	2
Direction of image	GPSImgDirection	17	11	RATIONAL	1
Geodetic survey data used	GPSMapDatum	18	12	ASCII	Any
Reference for latitude of destination	GPSDestLatitudeRef	19	13	ASCII	2
Latitude of destination	GPSDestLatitude	20	14	RATIONAL	3
Reference for longitude of destination	GPSDestLongitudeRef	21	15	ASCII	2
Longitude of destination	GPSDestLongitude	22	16	RATIONAL	3
Reference for bearing of destination	GPSDestBearingRef	23	17	ASCII	2
Bearing of destination	GPSDestBearing	24	18	RATIONAL	1
Reference for distance to destination	GPSDestDistanceRef	25	19	ASCII	2
Distance to destination	GPSDestDistance	26	1A	RATIONAL	1

A. Tags Relating to GPS

GPSVersionID

Indicates the version of *GPSInfoIFD*. The version is given as 2.0.0.0. This tag is mandatory when *GPSInfo* tag is present. (Note: The *GPSVersionID* tag is given in bytes, unlike the *ExifVersion* tag. When the version is 2.0.0.0, the tag value is 02000000.H.)

Tag = 0 (0.H)
Type = BYTE
Count = 4
Default = 2.0.0.0
  2.0.0.0 = Version 2.0
  Other = reserved

GPSLatitudeRef

Indicates whether the latitude is north or south latitude. The ASCII value 'N' indicates north latitude, and 'S' is south latitude.

Tag = 1 (1.H)
Type = ASCII
Count = 2
Default = none
  'N' = North latitude
  'S' = South latitude
  Other = reserved

GPSLatitude

Indicates the latitude. The latitude is expressed as three RATIONAL values giving the degrees, minutes, and seconds, respectively. When degrees, minutes and seconds are expressed, the format is dd/1,mm/1,ss/1. When degrees and minutes are used and, for example, fractions of minutes are given up to two decimal places, the format is dd/1,mmmm/100,0/1.

Tag = 2 (2.H)
Type = RATIONAL
Count = 3
Default = none

GPSLongitudeRef

Indicates whether the longitude is east or west longitude. ASCII 'E' indicates east longitude, and 'W' is west

longitude.

Tag = 3 (3.H)

Type = ASCII

Count = 2

Default = none

'E' = East longitude

'W' = West longitude

Other = reserved

GPSLongitude

Indicates the longitude. The longitude is expressed as three RATIONAL values giving the degrees, minutes, and seconds, respectively. When degrees, minutes and seconds are expressed, the format is ddd/1,mm/1,ss/1. When degrees and minutes are used and, for example, fractions of minutes are given up to two decimal places, the format is ddd/1,mmmm/100,0/1.

Tag = 4 (4.H)

Type = RATIONAL

Count = 3

Default = none

GPSAltitudeRef

Indicates the altitude used as the reference altitude. In this version the reference altitude is sea level, so this tag must be set to 0. The reference unit is meters. Note that this tag is BYTE type, unlike other reference tags.

Tag = 5 (5.H)

Type = BYTE

Count = 1

Default = 0

0 = Sea level

Other = reserved

GPSAltitude

Indicates the altitude based on the reference in *GPSAltitudeRef*. Altitude is expressed as one RATIONAL value. The reference unit is meters.

Tag = 6 (6.H)

Type = RATIONAL

Count = 1

Default = none

GPSTimeStamp

Indicates the time as UTC (Coordinated Universal Time). TimeStamp is expressed as three RATIONAL values giving the hour, minute, and second.

Tag = 7 (7.H)

Type = RATIONAL

Count = 3

Default = none

GPSSatellites

Indicates the GPS satellites used for measurements. This tag can be used to describe the number of satellites, their ID number, angle of elevation, azimuth, SNR and other information in ASCII notation. The format is not specified. If the GPS receiver is incapable of taking measurements, value of the tag must be set to NULL.

Tag = 8 (8.H)

Type = ASCII

Count = Any

Default = none

GPSStatus

Indicates the status of the GPS receiver when the image is recorded. 'A' means measurement is in progress, and 'V' means the measurement is Interoperability.

Tag = 9 (9.H)

Type = ASCII

Count = 2

Default = none

'A' = Measurement in progress

'V' = Measurement Interoperability

Other = reserved

GPSMeasureMode

Indicates the GPS measurement mode. '2' means two-dimensional measurement and '3' means three-dimensional measurement is in progress.

Tag = 10 (A.H)

Type = ASCII

Count = 2

Default = none

'2' = 2-dimensional measurement

'3' = 3-dimensional measurement

Other = reserved

GPSDOP

Indicates the GPS DOP (data degree of precision). An HDOP value is written during two-dimensional measurement, and PDOP during three-dimensional measurement.

Tag = 11 (B.H)

Type = RATIONAL

Count = 1

Default = none

GPSSpeedRef

Indicates the unit used to express the GPS receiver speed of movement. 'K' 'M' and 'N' represents kilometers per hour, miles per hour, and knots.

Tag = 12 (C.H)

Type = ASCII

Count = 2

Default = 'K'

'K' = Kilometers per hour

'M' = Miles per hour

'N' = Knots

Other = reserved

GPSSpeed

Indicates the speed of GPS receiver movement.

Tag = 13 (D.H)

Type = RATIONAL

Count = 1

Default = none

GPSTrackRef

Indicates the reference for giving the direction of GPS receiver movement. 'T' denotes true direction and 'M' is magnetic direction.

Tag = 14 (E.H)

Type = ASCII

Count = 2

Default = 'T'

'T' = True direction

'M' = Magnetic direction

Other = reserved

GPSTrack

Indicates the direction of GPS receiver movement. The range of values is from 0.00 to 359.99.

Tag = 15 (F.H)

Type = RATIONAL

Count = 1

Default = none

GPSImgDirectionRef

Indicates the reference for giving the direction of the image when it is captured. 'T' denotes true direction and 'M' is magnetic direction.

Tag = 16 (10.H)

Type = ASCII

Count = 2

Default = 'T'

'T' = True direction

'M' = Magnetic direction

Other = reserved

GPSImgDirection

Indicates the direction of the image when it was captured. The range of values is from 0.00 to 359.99.

Tag = 17 (11.H)

Type = RATIONAL

Count = 1

Default = none

GPSMapDatum

Indicates the geodetic survey data used by the GPS receiver. If the survey data is restricted to Japan, the value of this tag is 'TOKYO' or 'WGS-84'. If a *GPS Info* tag is recorded, it is strongly recommended that this tag be recorded.

Tag = 18 (12.H)

Type = ASCII

Count = Any

Default = none

GPSDestLatitudeRef

Indicates whether the latitude of the destination point is north or south latitude. The ASCII value 'N' indicates north latitude, and 'S' is south latitude.

Tag = 19 (13.H)

Type = ASCII

Count = 2

Default = none

'N' = North latitude

'S' = Sourth latitude

Other = reserved

GPSDestLatitude

Indicates the latitude of the destination point. The latitude is expressed as three RATIONAL values giving the degrees, minutes, and seconds, respectively. When degrees, minutes and seconds are expressed, the format is dd/1,mm/1,ss/1. When degrees and minutes are used and, for example, fractions of minutes are given up to two decimal places, the format is dd/1,mmmm/100,0/1.

Tag = 20 (14.H)

Type = RATIONAL

Count = 3

Default = none

GPSDestLongitudeRef

Indicates whether the longitude of the destination point is east or west longitude. ASCII 'E' indicates east longitude, and 'W' is west longitude.

Tag = 21 (15.H)

Type = ASCII

Count = 2

Default = none

'E' = East longitude

'W' = West longitude

Other = reserved

GPSDestLongitude

Indicates the longitude of the destination point. The longitude is expressed as three RATIONAL values giving the degrees, minutes, and seconds, respectively. When degrees, minutes and seconds are expressed, the format is ddd/1,mm/1,ss/1. When degrees and minutes are used and, for example, fractions of minutes are given up to two decimal places, the format is ddd/1,mmmm/100,0/1.

Tag = 22 (16.H)

Type = RATIONAL

Count = 3

Default = none

GPSDestBearingRef

Indicates the reference used for giving the bearing to the destination point. 'T' denotes true direction and 'M' is magnetic direction.

Tag = 23 (17.H)

Type = ASCII

Count = 2

Default = 'T'

'T' = True direction

'M' = Magnetic direction

Other = reserved

GPSDestBearing

Indicates the bearing to the destination point. The range of values is from 0.00 to 359.99.

Tag = 24 (18.H)

Type = RATIONAL

Count = 1

Default = none

GPSDestDistanceRef

Indicates the unit used to express the distance to the destination point. 'K', 'M' and 'N' represent kilometers, miles and knots.

Tag = 25 (19.H)

Type = ASCII

Count = 2

Default = 'K'

'K' = Kilometers

'M' = Miles

'N' = Knots

Other = reserved

GPSDestDistance

Indicates the distance to the destination point.

Tag	=	26 (1A.H)
Type	=	RATIONAL
Count	=	1
Default	=	none

Note: When the tag Type is ASCII, it must be terminated with NULL.

It must be noted carefully that since the value count includes the terminator NULL, the total count is the number of data+1. For example, *GPSLatitudeRef* cannot have any values other than Type ASCII 'N' or 'S'; but because the terminator NULL is added, the value of N is 2.

2.6.7. Interoperability IFD Attribute Information

The attached information(field name, code) stored in Interoperability IFD is listed in Table 12-2 and the meaning will be explained also.

Table 13 Interoperability IFD Attribute Information

Tag Name	Field Name	Tag ID		Type	Count
		Dec	Hex		
A. Attached Information Related to Interoperability					
Interoperability Identification	Interoperability Index	0	0	ASCII	Any

A. Tags Relating to Interoperability

The rules for Exif image files defines the description of the following tag only. Other tags stored in Interoperability IFD may be defined dependently to each Interoperability rule.

Interoperability Index

Indicates the identification of the Interoperability rule.

Use “R98” for stating ExifR98 Rules. Four bytes used including the termination code(NULL). See the separate volume of Recommended Exif Interoperability Rules (ExifR98) for other tags used for ExifR98.

Tag = 1 1.H

Type = ASCII

Count = Any

Default = none

"R98" = Recommended Exif Interoperability Rules (ExifR98)

2.6.8. Tag Support Levels

The tags and their support levels are given here.

A. Primary Image (0th IFD) Support Levels

The support levels of primary image (0th IFD) tags are given in Table 14, Table 15, Table 16 and Table 17.

Table 14 Tag Support Levels (1) - 0th IFD TIFF Tags -

Tag Name	Field Name	Tag ID		Uncompressed			Compressed
		Dec	Hex	Chunky	Planar	YCC	
Image width	ImageWidth	256	100	M	M	M	J
Image height	ImageLength	257	101	M	M	M	J
Number of bits per component	BitsPerSample	258	102	M	M	M	J
Compression scheme	Compression	259	103	M	M	M	J
Pixel composition	PhotometricInterpretation	262	106	M	M	M	J
Image title	ImageDescription	270	10E	R	R	R	R
Manufacturer of image input equipment	Make	271	10F	R	R	R	R
Model of image input equipment	Model	272	110	R	R	R	R
Image data location	StripOffsets	273	111	M	M	M	N
Orientation of image	Orientation	274	112	R	R	R	R
Number of components	SamplesPerPixel	277	115	M	M	M	J
Number of rows per strip	RowsPerStrip	278	116	M	M	M	N
Bytes per compressed strip	StripByteCounts	279	117	M	M	M	N
Image resolution in width direction	XResolution	282	11A	M	M	M	M
Image resolution in height direction	YResolution	283	11B	M	M	M	M
Image data arrangement	PlanarConfiguration	284	11C	O	M	O	J
Unit of X and Y resolution	ResolutionUnit	296	128	M	M	M	M
Transfer function	TransferFunction	301	12D	R	R	R	R
Software used	Software	305	131	O	O	O	O
File change date and time	DateTime	306	132	R	R	R	R
Person who created the image	Artist	315	13B	O	O	O	O
White point chromaticity	WhitePoint	318	13E	O	O	O	O
Chromaticities of primaries	PrimaryChromaticities	319	13F	O	O	O	O
Offset to JPEG SOI	JPEGInterchangeFormat	513	201	N	N	N	N
Bytes of JPEG data	JPEGInterchangeFormatLength	514	202	N	N	N	N
Color space transformation matrix coefficients	YCbCrCoefficients	529	211	N	N	O	O
Subsampling ratio of Y to C	YCbCrSubSampling	530	212	N	N	M	J
Y and C positioning	YCbCrPositioning	531	213	N	N	M	M
Pair of black and white reference values	ReferenceBlackWhite	532	214	O	O	O	O
Copyright holder	Copyright	33432	8298	O	O	O	O
Exif tag	Exif IFD Pointer	34665	8769	M	M	M	M
GPS tag	GPSInfo IFD Pointer	34853	8825	O	O	O	O

Notation
M : Mandatory (must be recorded)
R : Conditionally mandatory (must be recorded if hardware permits)
O : Optional
N : Not recorded
J : Included in JPEG marker and so not recorded

Table 15 Tag Support Levels (2) - 0th IFD Exif Private Tags –

Tag Name	Field Name	Tag ID		Uncompressed			Compressed
		Dec	Hex	Chunky	Planar	YCC	
Exposure time	ExposureTime	33434	829A	O	O	O	O
F number	FNumber	33437	829D	O	O	O	O
Exposure program	ExposureProgram	34850	8822	O	O	O	O
Spectral sensitivity	SpectralSensitivity	34852	8824	O	O	O	O
ISO speed ratings	ISOSpeedRatings	34855	8827	O	O	O	O
Optoelectric coefficient	OECF	34856	8828	O	O	O	O
Exif Version	ExifVersion	36864	9000	M	M	M	M
Date and time original image was generated	DateTimeOriginal	36867	9003	O	O	O	O
Date and time image was made digital data	DateTimeDigitized	36868	9004	O	O	O	O
Meaning of each component	ComponentsConfiguration	37121	9101	N	N	N	M
Image compression mode	CompressedBitsPerPixel	37122	9102	N	N	N	O
Shutter speed	ShutterSpeedValue	37377	9201	O	O	O	O
Aperture	ApertureValue	37378	9202	O	O	O	O
Brightness	BrightnessValue	37379	9203	O	O	O	O
Exposure bias	ExposureBiasValue	37380	9204	O	O	O	O
Maximum lens aperture	MaxApertureValue	37381	9205	O	O	O	O
Subject distance	SubjectDistance	37382	9206	O	O	O	O
Metering mode	MeteringMode	37383	9207	O	O	O	O
Light source	LightSource	37384	9208	O	O	O	O
Flash	Flash	37385	9209	O	O	O	O
Lens focal length	FocalLength	37386	920A	O	O	O	O
Manufacturer notes	MakerNote	37500	927C	O	O	O	O
User comments	UserComment	37510	9286	O	O	O	O
DateTime subseconds	SubSecTime	37520	9290	O	O	O	O
DateTimeOriginal subseconds	SubSecTimeOriginal	37521	9291	O	O	O	O
DateTimeDigitized subseconds	SubSecTimeDigitized	37522	9292	O	O	O	O
Supported FlashPix version	FlashPixVersion	40960	A000	M	M	M	M
Color space information	ColorSpace	40961	A001	M	M	M	M
Valid image width	PixelXDimension	40962	A002	N	N	N	M
Valid image height	PixelYDimension	40963	A003	N	N	N	M
Related audio file	RelatedSoundFile	40964	A004	O	O	O	O
Interoperability tag	Interoperability IFD Pointer	40965	A005	N	N	N	O
Flash energy	FlashEnergy	41483	A20B	O	O	O	O
Spatial frequency response	SpatialFrequencyResponse	41484	A20C	O	O	O	O
Focal plane X resolution	FocalPlaneXResolution	41486	A20E	O	O	O	O
Focal plane Y resolution	FocalPlaneYResolution	41487	A20F	O	O	O	O
Focal plane resolution unit	FocalPlaneResolutionUnit	41488	A210	O	O	O	O
Subject location	SubjectLocation	41492	A214	O	O	O	O
Exposure index	ExposureIndex	41493	A215	O	O	O	O
Sensing method	SensingMethod	41495	A217	O	O	O	O
File source	FileSource	41728	A300	O	O	O	O
Scene type	SceneType	41729	A301	O	O	O	O
CFA pattern	CFAPattern	41730	A302	O	O	O	O

Notation
M : Mandatory (must be recorded)
R : Conditionally mandatory (must be recorded if hardware permits)
O : Optional
N : Not recorded
J : Included in JPEG marker and so not recorded

Table 16 Tag Support Levels (3) - 0th IFD GPS Info Tags -

Tag Name	Field Name	Tag ID		Uncompressed			Comp-resse d
		Dec	Hex	Chunky	Planar	YCC	
GPS tag version	GPSVersionID	0	0	O	O	O	O
North or South Latitude	GPSLatitudeRef	1	1	O	O	O	O
Latitude	GPSLatitude	2	2	O	O	O	O
East or West Longitude	GPSLongitudeRef	3	3	O	O	O	O
Longitude	GPSLongitude	4	4	O	O	O	O
Altitude reference	GPSAltitudeRef	5	5	O	O	O	O
Altitude	GPSAltitude	6	6	O	O	O	O
GPS time (atomic clock)	GPSTimeStamp	7	7	O	O	O	O
GPS satellites used for measurement	GPSSatellites	8	8	O	O	O	O
GPS receiver status	GPSStatus	9	9	O	O	O	O
GPS measurement mode	GPSMeasureMode	10	A	O	O	O	O
Measurement precision	GPSDOP	11	B	O	O	O	O
Speed unit	GPSSpeedRef	12	C	O	O	O	O
Speed of GPS receiver	GPSSpeed	13	D	O	O	O	O
Reference for direction of movement	GPSTrackRef	14	E	O	O	O	O
Direction of movement	GPSTrack	15	F	O	O	O	O
Reference for direction of image	GPSImgDirectionRef	16	10	O	O	O	O
Direction of image	GPSImgDirection	17	11	O	O	O	O
Geodetic survey data used	GPSMapDatum	18	12	O	O	O	O
Reference for latitude of destination	GPSDestLatitudeRef	19	13	O	O	O	O
Latitude of destination	GPSDestLatitude	20	14	O	O	O	O
Reference for longitude of destination	GPSDestLongitudeRef	21	15	O	O	O	O
Longitude of destination	GPSDestLongitude	22	16	O	O	O	O
Reference for bearing of destination	GPSDestBearingRef	23	17	O	O	O	O
Bearing of destination	GPSDestBearing	24	18	O	O	O	O
Reference for distance to destination	GPSDestDistanceRef	25	19	O	O	O	O
Distance to destination	GPSDestDistance	26	1A	O	O	O	O

Table 17 Tag Support Levels (4) - 0th IFD Interoperability Tag -

Tag Name	Field Name	Tag ID		Uncompressed			Comp-r essed
		Dec	Hex	Chunky	Planar	YCC	
Interoperability Identification	Interoperability Index	0	0	N	N	N	O

Notation
M : Mandatory (must be recorded)
R : Conditionally mandatory (must be recorded if hardware permits)
O : Optional
N : Not recorded
J : Included in JPEG marker and so not recorded

B. Thumbnail (1st IFD) Support Levels

The support levels of thumbnail (1st IFD) tags are shown in Table 18.

Table 18 Tag Support Levels (5) - 1st IFD TIFF Tag -

2.7. JPEG Marker Segments Used in Exif

In addition to the compressed data (Interoperability coded data), a compressed file contains one each of the marker segments APP1, DQT, DHT, SOF and SOS. The compressed data begins with an SOI and ends with an EOI marker. A restart marker (DRI, RSTm) can be inserted optionally. Another option is to have two or more APP2 marker segments. APPn other than APP1 and APP2 or COM segments are not used by Exif. However Exif readers should be designed skip over unknown APPn and COM.

APP1 must be recorded immediately after SOI, and if there is an APP2 it follows after APP1. DQT, DHT, DRI and SOF come after APP2 and before SOS, in any order.

The marker segments used in Exif are listed in Table 19.

Table 19 Marker Segments

	Marker Name	Marker Code	Description
SOI	Start of Image	FFD8.H	Start of compressed data
APP1	Application Segment 1	FFE1.H	Exif attribute information
APP2	Application Segment 2	FFE2.H	Exif extended data
DQT	Define Quantization Table	FFDB.H	Quantization table definition
DHT	Define Huffman Table	FFC4.H	Huffman table definition
DRI	Define Restart Interoperability	FFDD.H	Restart Interoperability definition
SOF	Start of Frame	FFC0.H	Parameter data relating to frame
SOS	Start of Scan	FFDA.H	Parameters relating to components
EOI	End of Image	FFD9.H	End of compressed data

The data structures of markers defined in JPEG Baseline DCT and used in Exif compressed files, as well as the APP1 and APP2 data structures defined specifically for this standard, are explained below.

2.7.1. JPEG Marker Segments

The data structure of JPEG marker segments other than APP1 and APP2 is noted below.

A. Start of compressed data (SOI: Start of Image)

SOI is a marker code indicating the start of compressed data (see Fig. 15).

Address Offset (Hex)	Code (Hex)	Meaning
+00	FF	Marker Prefix
+01	D8	SOI

Fig. 15 SOI Structure

B. Quantization table definition (DQT: Define Quantization Table)

DQT is a marker code defining a quantization table.

As many as three kinds of tables can be recorded with a precision of 8 bits (Pq=0). All quantization tables must be defined in one DQT marker segment; recording of multiple DQT markers is not allowed. The table may have any values (see Fig. 16). DQT, DHT, DRI and SOF may line up in any order, but must be recorded after APP1 (or APP2 if any) and before SOS.

Address Offset (Hex)	Code (Hex)	Meaning
+00	FF	Marker Prefix
+01	DB	DQT
+02	00	Length of field
	C5	2+(1+64)*3=197 (Bytes)
+04	00	Y: Pq=0, Nq=0
+05	:	Quantization table Y:Q0
	:	:
	:	:
	:	Quantization table Y:Q63
+45	01	Cb: Pq=0, Nq=1
+46	:	Quantization table Cb:Q0
	:	:
	:	:
	:	Quantization table Cb:Q63
+86	02	Cr: Pq=0, Nq=1
+87	:	Quantization table Cr:Q0
	:	:
	:	:
	:	Quantization table Cr:Q63

Fig. 16 DQT Structure (with three quantization tables)

C. Huffman table definition (DHT: Define Huffman Table)

DHT is a marker code defining a Huffman table.

In this standard a single component shall have a Huffman table consisting of a set of DC and AC, and each component must be mapped to one or another of the Huffman tables defined by DHT. All Huffman tables must be recorded in one DHT marker segment; recording of multiple DHT markers is not allowed. A Huffman table may have any values, or the JPEG reference values may be used as the base table (see Fig. 17).

DQT, DHT, DRI and SOF may line up in any order, but must be recorded after APP1 (or APP2 if any) and before SOS.

Address Offset (Hex)	Code (Hex)	Meaning
+00	FF	Marker Prefix
+01	C4	DHT
+02	01 A2	Length of field 2+(1+16+12+1+16+162)*2 = 418 Bytes
+04	00	Table number Y-DC : 00
+05	: : :	DHT parameter
+21	10	Table number Y-AC : 10
+22	: : :	DHT parameter
+D4	01	Table number C-DC : 01
+D5	: : :	DHT parameter
+F1	11	Table number C-AC : 11
+F2	: : :	DHT parameter

Fig. 17 DHT Structure

D. Restart Interoperability definition (DRI: Define Restart Interoperability)

DRI is a marker defining the Interoperability at which restart markers are inserted (see Fig. 18). The recording of DRI and insertion of restart markers are optional. If restart markers are inserted, DRI shall be recorded and its values shall be 4 MCU (Minimum Coding Unit), i.e., 64 pixel units, regardless of whether 4:2:2 or 4:2:0 is used for color sampling (see Appendix F). Only one DRI shall be recorded.

DQT, DHT, DRI and SOF may line up in any order, but must be recorded after APP1 (or APP2 if any) and before SOS.

Address Offset (Hex)	Code (Hex)	Meaning
+00	FF	Marker Prefix
+00	DD	DRI
+02	00	Length of field 2+2 = 4 (Bytes)
+04	XX YY	00 04

Fig. 18 DRI Structure

E. Frame header (SOF: Start of Frame)

SOF is a marker code indicating the start of a frame segment and giving various parameters for that frame (see Fig. 19).

DQT, DHT, DRI and SOF may line up in any order, but must be recorded after APP1 (or APP2 if any) and before SOS.

Address Offset (Hex)	Code (Hex)	Meaning
+00	FF	Marker Prefix
+00	C0	SOF
+02	00 11	Length of field 2+1+2+2+1+2*3 = 17 (Bytes)
+04	08	Data precision (bits)
+05	XX YY	Vertical lines XXYY (Hex) lines
+07	WW ZZ	Horizontal lines WWZZ (Hex) pixels
+09	03	Components
+0A	01	Component number (1:Y)
+0B	21or22	H0 = 2, V0 = 1(4:2:2) or 2(4:2:0)
+0C	00	Quantization designation
+0D	02	Component number (2:Cb)
+0E	11	H1 =1, V1 = 1
+0F	01	Quantization designation
+10	03	Component number (3:Cr)
+11	11	H2 =1, V2 = 1
+12	02	Quantization designation

Fig. 19 SOF Structure

F. Scan header (SOS: Start of Scan)

SOS is a marker code giving various scan-related parameters (see Fig. 20).

Address Offset (Hex)	Code (Hex)	Meaning
+00	FF	Marker Prefix
+00	DA	SOS
+02	00 0C	Length of field 2+1+3*2+3 = 12 (Bytes)
+04	03	Components in scan
+05	01	Component selector Y : 01
+06	00	Huffman table selector Y : 00
+07	02	Component selector Cb : 02
+08	11	Huffman table selector C : 11
+09	03	Component selector Cr : 03
+0A	11	Huffman table selector C : 11
+0B	00	Scan start position in block
+0C	3F	Scan end position in block
+0D	00	Successive approximation Bit position

Fig. 20 SOS Structure

G. Compressed data

Compressed data is byte data block Interoperability at the required ratio of Y:Cb:Cr and Huffman encoded. An EOB (End of Block) is inserted in each block when the last value of its DCT coefficient is 0. If restart marker insertion is defined in DRI, restart markers are inserted at 4 MCU Interoperability.

H. End of compressed data (EOI : End of Image)

EOI is a marker code indicating the end of Interoperability coded data, and is paired with SOI (see Fig. 21). No specification is made regarding data arrays that come after EOI.

Address Offset (Hex)	Code (Hex)	Meaning
+00	FF	Marker Prefix
+01	D9	EOI

Fig. 21 EOI Structure

2.7.2. Interoperability Structure of APP1 in Compressed Data

APP1 consists of an APP1 marker indicating that it is an application area, a length code indicating its size, and primary image attribute information patterned after the TIFF structure. The APP1 segment cannot record more than 64 Kbytes, a limitation that must be kept in mind when recording thumbnail images.

APP1 also records attribute information for JPEG compressed images. The features of this marker segment are described below.

A. Order of APP1 recording

APP1 is recorded immediately after the SOI marker indicating the start of the file (see Fig. 6).

B. APP1 Interoperability structure

APP1 consists of an APP1 marker, Exif ID code and the attribute information itself (see Fig. 22).

Address Offset (Hex)	Code (Hex)	Meaning
+00	FF	Marker Prefix
+01	E1	APP1
+02		Length of field
+04	45	'E'
+05	78	'x'
+06	69	'i'
+07	66	'f'
+08	00	NULL
+09	00	Padding
+0A		Attribute information

Fig. 22 Basic Structure of APP1 Marker Segment

C. Exif ID code

The Exif ID code indicates that the APP1 segment Interoperability is Exif format. After a 4-byte code, 00.H is recorded in 2 bytes. The reason for recording this code is to avoid duplication with other applications making use of JPEG application marker segments (APPn).

D. Attribute information

Attribute information is recorded in 2 IFDs (0th IFD, 1st IFD) following the TIFF structure, including the File Header. The 0th IFD records compressed image attributes (the image itself). The 1st IFD can be used for thumbnail images.

E. TIFF header

The TIFF header in APP1 constitutes 8 bytes of data, including the byte order and the Offset of IFD indicating the first IFD. The Offset is referenced to the address of the first byte of the Byte Order. For example, the Offset of IFD address in the TIFF Header is 4 (see Table 1).

F. Relation to JPEG marker segments

Attribute information is recorded in essentially the same format as that used to record uncompressed data attribute information. In order to avoid duplication, however, attribute information recorded in a JPEG marker segment is not recorded in APP1.

2.7.3. Interoperability Structure of APP2 in Compressed Data

APP2 consists of an APP2 marker indicating that it is an application area, a length code indicating its size, and FlashPix (see Appendix F) extensions. If there is no need to record extensions, this marker segment can be omitted.

There are two kinds of APP2 marker segments for recording FlashPix extensions.

One is a Contents List Segment recording a storage and stream list making up the extended data. One file contains only one contents list segment.

The second is a Stream Data Segment storing the data for each of the streams listed in the Contents List Segment. If necessary, there can be two or more APP2 marker segments for storing stream data.

In addition there is an APP2 segment reserved for FlashPix use, which is specified in the FlashPix standard.

The contents of data that can be recorded as stream data is left for future specification. It may include one or more Audio data.

A. Order of APP2 recording.

APP2 segments follow after the APP1 segment, in the order of Contents List Segment and Stream Data Segments. If there are two or more stream data segments, their order is as given in the contents list (see Fig. 6).

B. APP2 Interoperability structure

APP2 consists of an APP2 marker, ID code (FPXR), and Contents List or Stream Data (see Fig. 23).

Address Offset (Hex)	Code (Hex)	Meaning
+00	FF	Marker Prefix
+01	E2	APP2
+02		Length of field
+04	46	'F'
+05	50	'P'
+06	58	'X'
+07	52	'R'
+08	00	NULL
+09	00	Version
+0A		Contents List or Stream Data

Fig. 23 Basic Structure of APP2 Marker Segment

C. FPXR ID code

The FPXR ID code indicates that the APP2 segment contains FPXR data. It is a 4-byte code followed by 00.H recorded in 1 byte. The reason for recording this code is to avoid duplication with other applications making use of JPEG application marker segments (APPn). The subsequent byte gives the version number (00.H).

D. Contents list structure

The contents list segment lists the storages and streams to be created when the file is converted to a FlashPix image file. The first two bytes give the number of Interoperability.

The Interoperability fields on the contents list are as follows.

Entity size

Indicates the size of the stream, or else FFFFFFFF.H (in the case of a storage). It is recorded in big endian format.

Default value

A fixed value not set explicitly in the stream data segment but used as the default for each byte.

Storage/Stream name

The name of the storage and stream added for transformation to FlashPix. It is given as the full path name from the FlashPix source image object root storage. "/" represents a directory separator and must be the first character of the property value. This name is a 16-bit character string from the Unicode code page, with NULL termination. It is recorded in little endian format.

Entity class ID

The storage ClassID, given only in the case of a storage Interoperability. It is written as 16-bytes in little endian format.

The data structure of the Contents List Segment is given in Fig. 24.

Address Offset (Hex)	Bytes (Hex)	Code (Hex)	Meaning
+00	1	FF	Marker Prefix
+01	1	E2	APP2
+02	2		Length of field
+04	4		"FPXR"
+08	1	00	NULL
+09	1	00	Version
+0A	1	01	Contents List
+0B	2		Interoperability Count
+0C	4		Entity size 1
+11	1		Default value 0
+12	m_0		Storage or Stream name 0
+12+m_0	(n_0)		(Entity Class ID 0)
+12+m_0+n_0	4		Entity size 1
:	1		Default value 1
:	m_1		Storage or Stream name 1
:	(n_1)		(Entity Class ID 1)
:	:	:	:
:	:	:	:
:	4		Entity size l
:	1		Default value l
:	m_l		Storage or Stream name l
:	(n_l)		(Entity Class ID l)

Fig. 24 Contents List Segment Structure

E. Stream Data Segment structure

A stream data segment records part or all of the stream listed in the contents list segment. Because of the 64-Kbyte size limit of a JPEG marker segment, a stream longer than this must be recorded in two or more stream data segments. Instead of writing stream data directly in multiple stream data segments, the segments may be filled based on a fixed default. A stream data segment contains the following data.

Index into Contents Lists

The order of Interoperability recorded in a contents list segment starting from 0.

Offset into the full FlashPix stream

The offset to the first byte of stream data in the FlashPix stream.

Stream Data

The actual data stream recorded as extended data in the transformation to FlashPix. The length of this data is indicated by the length code in the stream data segment.

The data structure of a Stream Data Segment is given in Fig. 25.

Address Offset (Hex)	Bytes (Hex)	Code (Hex)	Meaning
+00	1	FF	Marker Prefix
+01	1	E2	APP2
+02	2		Length of field
+04	4		"FPXR"
+08	1	00	NULL
+09	1	00	Version
+0A	1	02	Stream Data
+0B	2	N	Index to Contents List
+0C	4	(Offset)	Offset to FlashPix stream
+11	Variable	(value)	Stream Data

Fig. 25 Stream Data Segment Structure

F. Reserved Segment *(Reserved for future use by the FlashPix format)*

This marker segment is reserved for future use. An example is given in Fig. 26.

Address Offset (Hex)	Bytes (Hex)	Code (Hex)	Meaning
+00	1	FF	Marker Prefix
+01	1	E2	APP2
+02	2		Length of field
+04	4		"FPXR"
+08	1	00	NULL
+09	1	00	Version
+0A	1	03	Reserved for FlashPix
+0B	: :	: :	

Fig. 26 Structure of Data Segment Reserved for FlashPix

2.8. Data Description

2.8.1. Stipulations on Compressed Image Size

The JPEG format is adopted for compressed images. Since JPEG compresses images in blocks of 8 x 8 pixels, preferably the pixel number set as the width and height of the image should be exact multiples of the MCU (multiples of 16 for width, and multiples of 8 for height if Y:Cb:Cr = 4:2:2, or 16 if Y:Cb:Cr = 4:2:0). It is not required, however, that all image data be fit within this range.

If a restart marker is inserted every 4 MCU for the sake of transformation to FlashPix, the width of the image must be an exact multiple of 4 MCU (64 pixels). There is no such restriction on height.

Specifications on inserting data to adjust the recorded image size relative to the valid image size, or padding, are given below.

A. Image size recording procedure in the Exif writer

An Exif writer shall record a compressed image with the image width information and height information set in accord with the stipulations below, and padded as necessary.

When the image is padded in the direction of width, the padding data must be appended at the right edge. Padding in the direction of height must be appended at the bottom edge.

The data used for padding is not specified.

Stipulations on image width

Image width information consists of the valid image width tag (*PixelXDimension*), SOF marker information, and JPEG compressed data. Of these three, the recording of a valid image width tag is mandatory.

Image width is padded to the right in the following cases. The value used for padding is not specified.

- When the image width is not an exact multiple of 16 and the JPEG block has unused capacity to be filled.
- When the image width is not a multiple of 64 and the insufficiency must be made up in order to insert restart markers.

The method of describing the various image width data with and without padding is given in Fig. 27. It must be noted carefully that the value of SOF is used in some cases to describe the valid image width, and in others to describe the image width after padding.

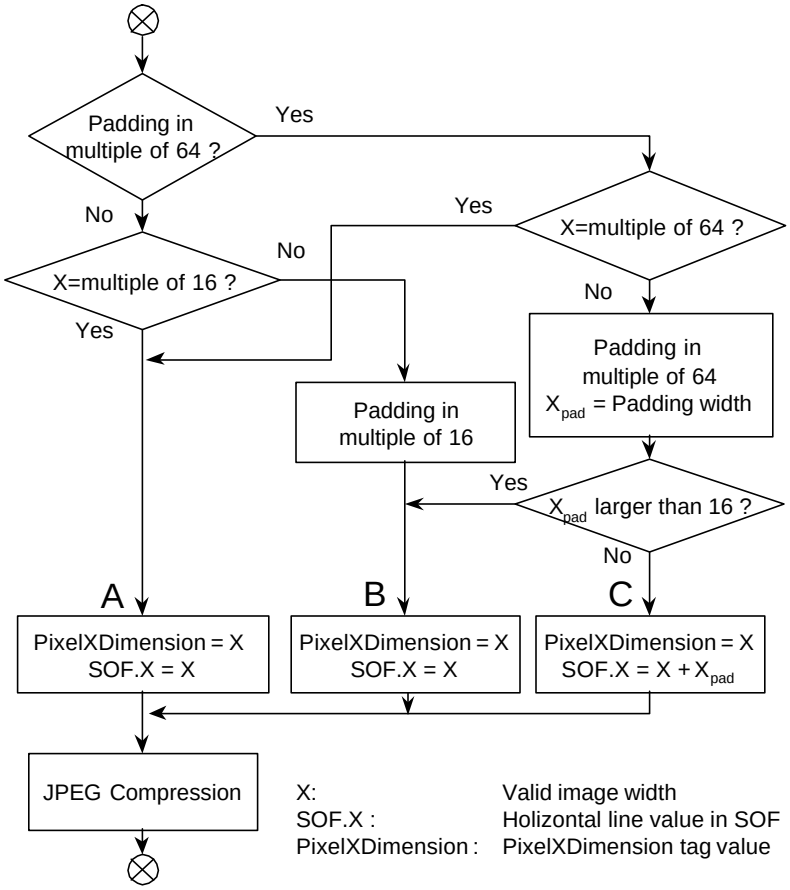

Fig. 27 Image Data Width Description

Table 20 gives examples of information recorded in the direction of image width and padding data width, for each of cases A, B, and C of Fig. 27.

Table 20 Typical Width Direction Information and Padding Data

	Valid Image Width	PixelXDimension	SOF Information	Compressed Data	Padding Width
A	640	640	640	640	0
B	634	634	634	640	6 (< 1MCU)
C	620	620	640	640	20 (> 1MCU)

Stipulations on image height

Image height information consists of the valid image height tag (*PixelYDimension*), SOF marker information, and JPEG compressed data. Of these three, the recording of a valid image height tag is mandatory.

The image height is padded in the following case. The padding value is not specified.

- When the image height is not an exact multiple of 16 and the JPEG block has unused capacity to be filled.

Insertion of a restart marker does not require padding. The method of recording the various image height data with and without padding is given in Fig. 28. The SOF marker always has the same value as the effective image height tag.

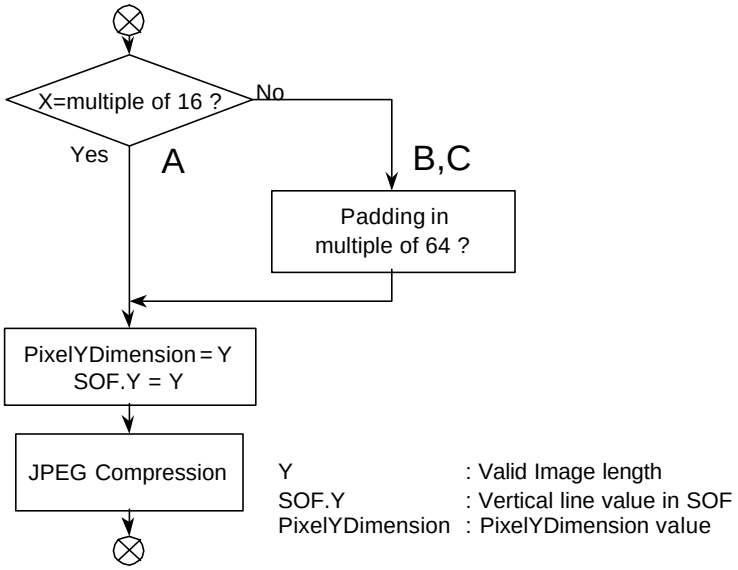

Fig. 28 Image Data Height Description

Table 21 gives examples of information recorded in the direction of image height and padding data height, for each of cases A, B, and C of Fig. 28.

Table 21 Typical Height Direction Information and Padding Data (when Y:Cb:Cr = 4:2:2)

	Valid Image Height	Valid Image Height Tag	SOF Information	Compressed Data	Padding Height
A	480	480	480	480	0
B	474	474	474	480	6 (< 1MCU)
C	460	460	460	464	4 (< 1MCU)

B. Image size reproduction procedure in the Exif reader

It is recommended that the Exif reader (and in particular, dedicated software) follow the procedure shown in Fig. 29 for reproducing images. First it expands the image based on the SOF information. Next it trims the image on the right and lower edges in accord with information in the valid image width tag and height tag, and reproduces the valid image data. If the SOF information and the valid image width and height tag information are the same, trimming is unnecessary.

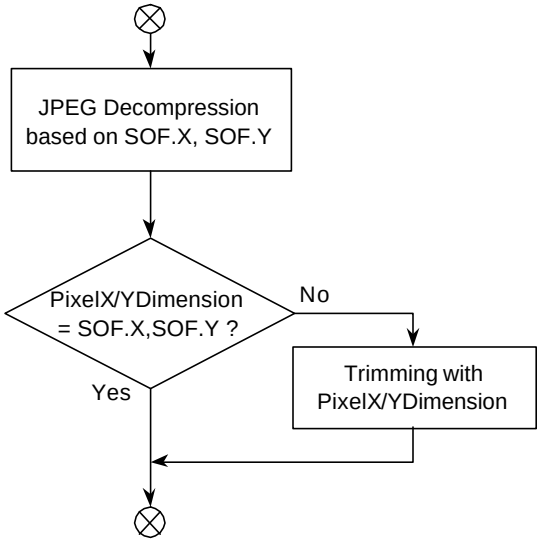

Fig. 29 Procedure for Image Data Reproduction

Some off-the-shelf software lacks a function for handling valid image width and height tags. If the valid image width differs from the number of horizontal pixels recorded in the SOF, padding data may be displayed. The padding data values should be chosen with this possibility in mind.

2.8.2. Stipulations on Thumbnails

A. Exif writer

The recording of thumbnail images is an optional specification of the Exif reader. It is therefore allowable to have Exif files with and without thumbnails. For details see section 2.5.5.

B. Exif reader

This format is designed so that the primary image will be reproduced intact whether or not thumbnail images are recorded in the file. It is assumed that even when functions are provided for viewing images on the camera or player, for viewing the process of image transfer from camera to PC, or for using thumbnails as an index display in the camera software or other image software, there will still be cases where the file is viewed without thumbnails. The creation and displaying of thumbnails can therefore be performed or not at the discretion of the user.

2.8.3. File Name Stipulations

A. Exif writer

The file name and characters used for file names are not specified, other than to stipulate the use of ASCII alphanumerics. (File names in Japanese or other character sets are not to be used.) File names shall be 8 characters or fewer, not including the extension. (Long file names are not to be used.) The file name extensions are ".JPG" for compressed data files and ".TIF" for uncompressed data files.

2.8.4. Byte Order Stipulations

A. Exif Reader

It is recommended that the Exif reader be able to reproduce Exif files recorded in both little endian and big endian formats.

3. Exif Audio File Specification

3.1. Outline of the Exif Audio File Specification

This chapter gives details of the audio file specification, covering the following items:

- Format version definition,
- Specifications relating to audio data,
- Basic structure of audio data,
- Chunks,
- File naming conventions.

3.2. Format Version

The version of the format specified here is recorded as 4 bytes (see section 3.6.3). The address bytes are recorded as A1, A2, B1, B2, starting with the lowest number. A1 and A2 store the upper part of the standard version, with the lower part stored in B1 and B2. When changes are made to the version number of this standard, the following rules apply:

- When the changes are such that data readers can properly recognize conventional information and skip the data that was recorded using newly added functions, the lower part of the version (B1, B2) is changed,
- When there is a possibility that a data reader implementing the old standard may operate incorrectly due to the new specifications, the upper part of the version (A1, A2) is changed.

Players should be able to play back files of versions earlier than the supported standard.

3.3. Definition of Terms

Terms and notation are used as follows in this standard:

- Text enclosed in " " is a character string, and " "Z means a character string ending in NULL (00.H),
- ".H" appended to a numerical value means it is hexadecimal notation.
- Unless otherwise indicated, other numerical values are given in decimal notation.

3.4. Specifications Relating to Audio Data

3.4.1. Sampling Frequency

The sampling frequency shall be any of 8.000 kHz, 11.025 kHz, 22.050 kHz or 44.100 kHz. Only 8.000 kHz shall be used for μ–LAW PCM in accord with ITU-T G.711.

3.4.2. Bit Size

The bit size shall be 8 bits or 16 bits. Only 8 bits shall be used for μ-LAW PCM in accord with ITU-T G.711; and only 4 bits shall be used for IMA-ADPCM in accord with the IMA (Interoperability Multimedia Association) specification.

3.4.3. Channels

The number of channels is either monaural or stereo (2 ch).

3.4.4. Compression Schemes

The following three compressions schemes are specified here:

- Uncompressed audio data: PCM ,
- Uncompressed audio data: μ-Law PCM (conforming to ITU-T G.711 [viii]) ,
- Compressed data: IMA-ADPCM [ix] .

3.5. Basic Structure of Audio Data

Exif audio files are based on the RIFF WAVE Form Audio File format[vii] adopted as a Windows™ standard audio file format, with the addition of various DSC attribute information as needed. Exif audio files are data-compatible with WAVE Form Audio files and can be played on accessories supplied with Windows™.

Of the general attribute information required by DSC applications, the common attributes are recorded on an *INFO list*, and the Exif-specific attributes are recorded in Exif chunks. The Exif chunks are provided to enable the addition of information as necessary, taking advantage of chunk extensibility. The method of recording data in the Exif-specific chunks is patterned after that for the *INFO list*.

3.5.1. Basic Structure of WAVE Form Audio Files

The WAVE Form Audio File format is based on the *RIFF (Resource Interoperability File Format)* tagged file structure.

A *RIFF* file consists of basic data blocks called chunks.

(1) *Chunk*

Using C language syntax, a chunk can be defined as a structure, like that in Equation 1. The chunk structure can also be expressed in graphical form as in Fig. 30.

```
typedef struct {
        unsigned long   ckID;           // 4-character code
        unsigned long   ckSize;         // Size of member <ckData>
        unsigned char   ckData[ckSize]; // The data in the chunk
} CK;
```

- - - [Equation 1]

Address Offset (Hex)	Meaning
+00	ckID (4 Bytes)
+04	ckSize (4 Bytes)
+08	ckData[ckSize]

Fig. 30 Chunk Structure

Explanation

- *ckID* (chunk ID, a 4-character code) consists of from one to four ASCII alphanumerics, left-justified and filled with blank characters if less than four characters in length. Blanks cannot be inserted between characters. This four-character code identifies the contents of the chunk data, described later. Software processing the chunk is allowed to skip a chunk with an unknown chunk ID.
- *ckSize* (chunk Size) is a 32-bit unsigned integer giving the size (bytes) of the *ckData*[*ckSize*] (chunk Data). This size does not include padding bytes following the ckID, *ckSize* itself and *ckData*. The byte order is little endian (LSB first, MSB last). In the case of *RIFF* files, values of more than one byte are all written in little endian order. If two or more chunks follow in sequence, the value of chSize must be read properly in order to know the start address (ckID) of the next chunk.
- *ckData*[*ckSize*] (chunk Data) is the actual data included in that chunk, and may be recorded as binary data of either fixed length or variable length. The start of *ckData* is aligned with the *RIFF* file start position in word (16-bit) units. If the data size is an odd number of bytes, a padding byte with the value '0' is appended after the *ckData*. This padding byte is not included in the *ckSize* (chunk Size).
- *ckData*[*ckSize*] (chunk Data) can itself have a particular structure rather than being a simple byte array. That is, *ckData* itself can include a chunk (sub-chunk). In other words, chunks can be arranged hierarchically. Only certain chunks are allowed to contain sub-chunks. These are the *RIFF* chunk and *LIST* chunk described later below. Generally two or more sub-chunks may be contained in these chunks. All other chunks store only one binary data element in the *ckData*.

(2) *RIFF Form*

A "*RIFF* form" is a chunk with "*RIFF*" as its chunk ID (ckID); it is also used to mean a file format with the *RIFF* structure (*RIFF* file).

A "*RIFF* chunk" *ckData* (chunk data) consists of a 4-character code at the beginning called the *formType* (form type), followed by a sub-chunk.

A *RIFF* chunk is at the top of the chunk hierarchy. A *RIFF* form must have this chunk, but can have only one. All other chunks are sub-chunks of the *RIFF* chunk.

A form type is generally a code identifying the data contents, among other things. It is also possible to tell from this code what kind of sub-chunk a chunk contains. A form type must be registered. A registered form type is written in all upper-case letters.

Along with a form type, a chunk ID (ckID) must also be registered. A chunk ID in all upper-case letters indicates a general-purpose chunk that can be used with various form types. A chunk ID used with a specific form type is written in all lower-case letters.

An illustration of the *RIFF* chunk is given in Fig. 31.

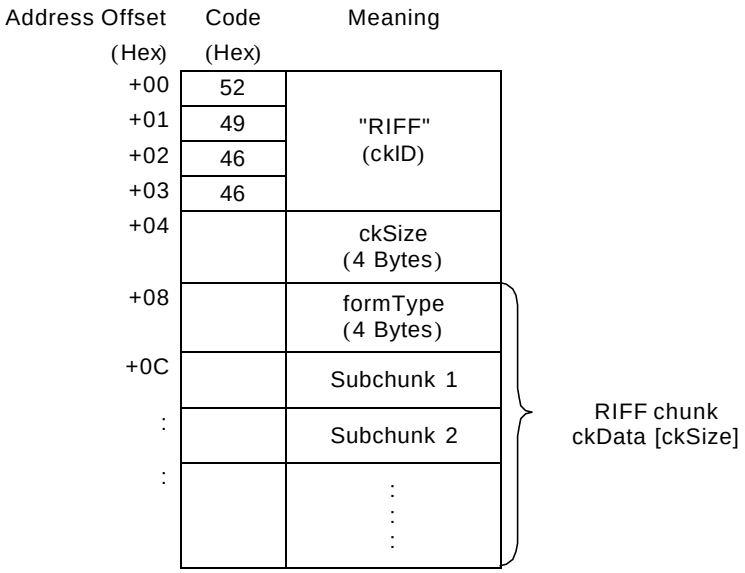

Fig. 31 RIFF Chunk Structure

Note:

Representative form types are given in Table 22. These are written in all upper-case letters because they are registered form types.

Table 22 Representative Form Types

Form Type	Name
PAL	Palette file form
RDIB	RIFF DIB (Device Independent Bitmap) form
RMID	RIFF MIDI form
RMMP	RIFF multimedia movie form
WAVE	WAVE Form Audio File format

(3) WAVE Form Audio File Format

The *WAVE* Form is one kind of *RIFF* form. It is a file for handling digitized sound data. The form type is *WAVE*, in upper-case letters.

The file extension for a *WAVE* Form Audio File is ".WAV".

The data structure of the *WAVE* Form Audio File format is shown in Fig. 32.

As is evident from Fig. 32, the chunk data (*ckData* [*ckSize*]) of a *RIFF* chunk generally consists of the *formType* ("*WAVE*"), *fmt-ck* (format chunk), *fact-ck* (fact chunk), and *data-ck* (data chunk). *fmt-ck* and *data-ck* are mandatory chunks, but *fact-ck* may be mandatory or not, depending on the format type (audio coding format) of the *WAVE* Form.

In addition to these, optional sub-chunks may be recorded and can store various attribute information. These optional sub-chunks are not shown in Fig. 32.

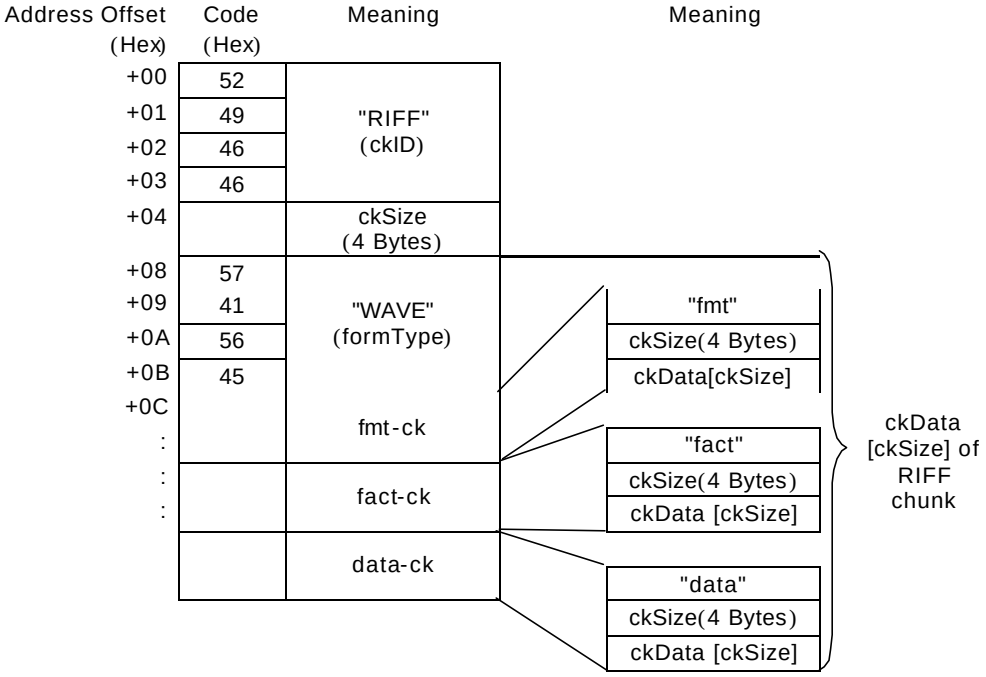

Fig. 32 Data Structure of the WAVE Form Audio File Format

<fmt-ck>

fmt-ck (format chunk) contains format information designating the format of audio data included in the *data-ck* (data chunk) described later below. The *ckID* (chunk ID) of *fmt-ck* is "fmt."

"fmt " is 3 characters long, so a blank character (20.H) goes at the end.

fmt-ck is mandatory and must always be recorded before *data-ck*.

Since *fmt-ck* has the chunk structure, *ckSize* and *ckData*[*ckSize*] are included as its members; but the contents of the *ckData* depend on the format type (audio coding format). This *ckData* consists of the structure given in Equation 2, and the byte array given in Equation 3.

```
struct{
        unsigned int     wFormatTag;          // Format type
        unsigned int     nChannels;           // Number of channels
        unsigned long    nSamplesPerSec;      // Sampling rate
        unsignrd long    nAvgBytesPerSec;     // Average bytes per second
        unsigned int     nBlockAlign;         // Block alignment
        unsigned int     wBitsPerSample;      // Bits per sample
        unsigned int     cbSize;              // Additional bytes
} WAVEFORMATEX;                                                  - - -[Equation 2]
unsigned char   extByte[cbSize];              // Additional byte array   - - -[Equation 3]
```

The meaning of each member of the format information is given in Table 23.

Table 23 Format Information Members

Member	Description
wFormatTag	An unsigned 16-bit integer indicating the format type (audio coding format) of the WAVE Form. Typical format types are given below. PCM (Pulse Code Modulation) format: 0001.H µ-Law format (ITU-T G.711): 0007.H IMA-ADPCM (DVI-ADPCM) format: 0011.H
nChannels	An unsigned 16-bit integer indicating the number of channels. Monaural is 1 and stereo is 2.
nSamplesPerSec	An unsigned 32-bit integer indicating the sampling rate (samples per second). Audio is played in each channel at this rate. In PCM format the common values of this member are 8.0kHz, 11.025kHz, 22.05kHz, and 44.1kHz.
nAvgBytesPerSec	An unsigned 32-bit integer indicating the average bytes per second, a value transferred to the data in data-ck. In PCM format, nAvgBytesPerSec is equivalent to the equation below. nChannels * wBitsPerSample/8
nBlockAlign	An unsigned 16-bit integer indicating the (byte unit) block alignment in data-ck. In PCM format, nBlockAlign is equivalent to the equation below. nChannels * wBitsPerSample/8
wBitsPerSample	An unsigned 16-bit integer indicating the bits per sample of each channel. In PCM format, this value is 8 or 16. In the case of compressed sound data, when this value cannot be defined it becomes '0'.
cbSize	An unsigned 16-bit integer indicating the size (in bytes) of the additional format information extByte[cbSize] appended after the WAVEFORMATEX structure. This information is used to store attributes added in non-PCM formats. If additional information is not needed, it becomes '0'. In PCM format, this member is not needed (the cbSize field itself is not necessary).
extByte[cbSize]	A byte array representing the additional format information appended after the WAVEFORMATEX structure. The meaning of this information depends on the format type. If the value of cbSize is 0, this field does not exist. In PCM format, both the cbSize field and extByte[cbSize] field are unnecessary.

The *fmt-ck* structure can be illustrated as in Fig. 33.

Address Offset (Hex)	Code (Hex)	Meaning		
+00	66	"fmt" (ckID)		ckData[ckSize] of fmt-ck
+01	6D			
+02	74			
+03	20			
+04		ckSize (4 Bytes)		
+08		wformatTag (2 Bytes)	WAVEFORMATEX Structure (18 Bytes)	
+0A		nChannels (2 Bytes)		
+0C		nSamplesPerSec (4 Bytes)		
+10		nAvgBytesPerSec (4 Bytes)		
+14		nBlockAlign (2 Bytes)		
+16		wBitsPerSample (2 Bytes)		
+18		cbsize (2 Bytes)		
+1A		extByte[cbSize]	Additional Byte Arrays	

Fig. 33 fmt-ck Structure

<fact-ck>

fact-ck (fact chunk) is used to store file-dependent information relating to the *WAVE* file contents. The *ckID* (chunk ID) of *fact-ck* is "fact".

It is assumed that *fact-ck* will be extended in the future to store information needed by *WAVE* files at that time, but currently only one information member is defined.

The information that can be stored in *fact-ck* at the present time is defined in [Equation 4].

```
unsigned long   dwSampleLength;          // Sample length - - - [Equation 4]
```

Table 24 fact-ck Member

Member	Description
dwSampleLength	An unsigned 32-bit integer indicating the number of audio data samples (sample length). When this information is combined with nSamplePerSec in fmt-ck, the data length can be expressed in seconds (recording time).

Since the only information defined presently is dwSampleLength, the value of *ckSize* (chunk Size) for *fact-ck* is '00000004.H'; but *ckSize* may change in the future as information is added (in which case it will be larger than '00000004.H'). Programs must be able to skip over fields they cannot Interoperability and go on to process the next chunk. For this reason the capability of correctly reading the value of *ckSize* is a necessary requirement.

The structure of *fact-ck* is illustrated in Fig. 34. The value of *ckSize* is fixed at '00000004.H' (this value is used in Write processing).

Address Offset (Hex)	Code (Hex)	Meaning
+00	66	"fact" (ckID)
+01	61	
+02	63	
+03	74	
+04	04	00000004.H (ckSize)
+05	00	
+06	00	
+07	00	
+08		dwSampleLength (4 Bytes) } ckData[ckSize]

Fig. 34 fact-ck Structure

<data-ck>

data-ck (data chunk) is a chunk for storing audio data. Its *ckID* (chunk ID) is "data".

The *ckData* (chunk Data) of *data-ck* consists of the audio data only. In some cases the chunk is filled out with padding bytes.

The audio data is coded based on the format type. The information in *fmt-ck* is used when the audio data is played back.

The *ckSize* (chunk Size) of *data-ck* is the size of the coded audio data only. The structure of *data-ck* is illustrated in Fig. 35.

Address Offset (Hex)	Code (Hex)	Meaning	
+00	64	"data" (ckID)	
+01	61		
+02	74		
+03	61		
+04		ckSize (4 Bytes)	Size of audio data
+08		ckData[ckSize]	Coded audio data

Fig. 35 data-ck Structure

3.5.2. Basic Structure of PCM Audio Data

PCM audio data has linear quantization (A/D conversion) characteristics, and is not encoded for compression. It therefore does not need to be decompressed for playback, but can simply be played by reading it directly.

The basic structure of audio data when the format type is PCM (Pulse Code Modulation) format is shown in Fig. 36.

Address Offset (Hex)	Code (Hex)	Meaning	
+00	52	"RIFF" (ckID)	
+01	49		
+02	46		
+03	46		
+04		ckSize (4 Bytes)	
+08	57	"WAVE" (formType)	
+09	41		
+0A	56		
+0B	45		
+0C		fmt-ck (24 Bytes)	PCM format information (size is 24 bytes fixed)
+24		data-ck	PCM format audio data

Fig. 36 Basic Structure of PCM Format

The specific values stored in *fmt-ck* in the case of PCM format are as shown in Table 25.

Table 25 PCM Format fmt-ck Information

PCM (Pulse Code Modulation) Format	
Members	Code
ckSize (fmt-ck) wFormatTag	00000010.H (16 Bytes, since cbSize is unnecessary) 0001.H (PCM format)
nChannels	The values of each mode are as follows. 0001.H (monaural) or 0002.H (stereo)
nSamplesPerSec	The values of each mode are as follows. 00001F40.H (8.0 kHz) 00002B11.H (11.025 kHz) 00005622.H (22.05 kHz) 0000AC44.H (44.10 kHz)
nAvgBytesPerSec	The values of each mode are as follows. 00001F40.H (8.0 kHz, 8-bit monaural) 00003E80.H (8.0 kHz, 8-bit stereo) 00003E80.H (8.0 kHz, 16-bit monaural) 00007D00.H (8.0 kHz, 16-bit stereo) 00002B11.H (11.025 kHz, 8-bit monaural) 00005622.H (11.025 kHz, 8-bit stereo) 00005622.H (11.025 kHz, 16-bit monaural) 0000AC44.H (11.025 kHz, 16-bit stereo) 00005622.H (22.05 kHz, 8-bit monaural) 0000AC44.H (22.05 kHz, 8-bit stereo) 0000AC44.H (22.05 kHz, 16-bit monaural) 00015888.H (22.05 kHz, 16-bit stereo) 0000AC44.H (44.10 kHz, 8-bit monaural) 00015888.H (44.10 kHz, 8-bit stereo) 00015888.H (44.10 kHz, 16-bit monaural) 0002B110.H (44.10 kHz, 16-bit stereo) Definition: nSamplesPerSec * nBlockAlign
nBlockAlign	The values of each mode are as follows. 0001.H (8-bit monaural) 0002.H (8-bit stereo) 0002.H (16-bit monaural) 0004.H (16-bit stereo) Definition: nChannels * wBitsPerSample/8
wBitsPerSample	The values of each mode are as follows. 0008.H (8bit) or 0010.H (16bit)
cbSize	Not used
extByte[cbSize]	Not used

In the case of PCM format audio data, the data format of each sample is 8-bit or 16-bit integer. These sample data formats and their values are given in Table 26.

Table 26 Sample Data Formats and Values

Sample Size	Data Format	Minimum	Interoperability	Maximum
8-bit PCM	Unsigned Integer	0 (00.H)	128 (80.H)	255 (FF.H)
16-bit PCM	Signed Integer	-32768 (8000.H)	0 (0000.H)	32767 (7FFF.H)

The PCM format audio data contained in *data-ck* is packed as shown in Fig. 37. Here the left-hand byte stores the lower address and the right-hand byte holds the upper address.

8-bit monaural PCM

Sample 0	Sample 1	Sample 2	Sample 3
Channel 0	Channel 0	Channel 0	Channel 0
Byte 0	Byte 1	Byte 2	Byte 3

8-bit stereo PCM

Sample 0		Sample 1	
Channel 0 (left)	Channel 1 (right)	Channel 0 (left)	Channel 1 (right)
Byte 0	Byte 1	Byte 2	Byte 3

16-bit monaural PCM

Sample 0		Sample 1	
Channel 0 Lower Byte	Channel 0 Upper Byte	Channel 0 Lower Byte	Channel 0 Upper Byte
Byte 0	Byte 1	Byte 2	Byte 3

16-bit stereo PCM

Sample 0			
Channel 0 (left) Lower Byte	Channel 0 (left) Upper Byte	Channel 1 (right) Lower Byte	Channel 1 (right) Upper Byte
Byte 0	Byte 1	Byte 2	Byte 3

Fig. 37 Packing of PCM Audio Data

3.5.3. Basic Structure of μ-Law Audio Data

Each of the audio data samples of μ-Law audio data has nonlinear (logarithmic) quantization characteristics. For this reason 16 bits of data can be represented in an 8-bit size. In playback, either the data is first converted to linear 16-bit data and then put through a linear D/A converter, or else the analog signal is derived by going through an 8-bit nonlinear D/A converter with characteristics opposite the μ-Law quantization characteristics. Details of the nonlinear quantization characteristics and of the conversion between 8-bit μ-Law data and 16-bit linear data are given in the ITU-T G.711 [viii] standard.

When the format type is μ-Law (ITU-T G.711) format, the basic structure is expressed as in Fig. 38.

The two differences from PCM format are the larger size of *fmt-ck* (the cbSize file exists) and the existence of *fact-ck*.

Address Offset (Hex)	Code (Hex)	Meaning	
+00	52	"RIFF" (ckID)	
+01	49		
+02	46		
+03	46		
+04		ckSize (4 Bytes)	
+08	57	"WAVE" (formType)	
+09	41		
+0A	56		
+0B	45		
+0C		fmt-ck (26 Bytes)	μ-Law format information (size is 26 bytes fixed)
+26		fact-ck (12 Bytes)	Samples per channel-unit block (μ-Law format)
+32		data-ck	PCM format audio data

Fig. 38 Basic Structure of μ-Law Format

The specific values of the information stored in *fmt-ck* and *fact-ck* in the case of the μ-Law format are given in Table 27.

Table 27 fmt-ck and fact-ck Information in μ-Law Format

μ-Law (ITU-T G.711) Format

Members	Code
ckSize(fmt-ck)	00000012.H (18 bytes, WAVEFORMATEX only)
wFormatTag	0007.H (μ-Law format)
nChannels	The values of each mode are as follows. 0001.H (monaural) or 0002.H (stereo)
nSamplesPerSec	00001F40.H (8.0kHz)
nAvgBytesPerSec	The values of each mode are as follows. 00001F40.H (8.0kHz, 8-bit monaural) 00003E80.H (8.0kHz, 8-bit stereo) Definition: nSamplesPerSec * nBlockAlign
nBlockAlign	The values of each mode are as follows. 0001.H (8bit monaural) 0002.H (8bit stereo) Definition: nChannels * wBitsPerSample/8
wBitsPerSample	0008.H (8bit)
cbSize	0000.H (extByte[cbSize] does not exist)
extByte[cbSize]	Not used
dwSampleLength	It is recommended that the actual number of samples that can be played be recorded here. Definition: (ckSize_of_data-ck) / nBlockAlign

The μ-Law audio data contained in *data-ck* is packed as shown in Fig. 39. Here the left-hand byte stores the lower address and the right-hand byte holds the upper address.

μ-Law monaural

Sample 0	Sample 1	Sample 2	Sample 3
Channel 0	Channel 0	Channel 0	Channel 0
Byte 0	Byte 1	Byte 2	Byte 3

μ-Law stereo

Sample 0		Sample 1	
Channel 0 (left)	Channel 1 (right)	Channel 0 (left)	Channel 1 (right)
Byte 0	Byte 1	Byte 2	Byte 3

Fig. 39 Packing of μ-Law Audio Data

3.5.4. Basic Structure of IMA-ADPCM Audio Data

IMA-ADPCM audio data is 4bit data obtained by compressing 16-bit linear PCM audio data. IMA-ADPCM, as seen in its other name DVI-ADPCM, uses a compression algorithm originally developed by the Intel DVI Group (DVI: Digital Video Interoperability). It was later adopted by the IMA (Interoperability Multimedia Association) as a standard audio data format.

Details of the IMA-ADPCM algorithm are given in the IMA Digital Audio Doc-Pac[xvii] and other documents.

When the format type is IMA-ADPCM (DVI-ADPCM), the basic structure is as shown in Fig. 40.

A *fact-ck* is recorded as with the μ-Law format, but a difference from that format is the larger *fmt-ck* size (in addition to a cbSize field there is a wSamplesPerBlock field).

Address Offset (Hex)	Code (Hex)	Meaning	
+00	52	"RIFF" (ckID)	
+01	49		
+02	46		
+03	46		
+04		ckSize (4 Bytes)	
+08	57	"WAVE" (formType)	
+09	41		
+0A	56		
+0B	45		
+0C		fmt-ck (28 Bytes)	IMA-ADPCM format information (size is 28 bytes fixed)
+28		fact-ck (12 Bytes)	Samples per channel-unit block (IMA-ADPCM format)
+34		data-ck	PCM format audio data

Fig. 40 Basic Structure of IMA-ADPCM Format

The specific values of the information stored in *fmt-ck* and *fact-ck* in the case of the IMA-ADPCM format are given in Table 28 and Table 29.

Table 28 IMA-ADPCM Format fmt-ck and fact-ck Information (1)

IMA-ADPCM (DVI-ADPCM) Format	
Members	Code
ckSize(fmt-ck)	00000014.H (20 bytes)
wFormatTag	0011.H (IMA-ADPCM format)
nChannels	0001.H (monaural) or 0002.H (stereo)
nSamplesPerSec	The values of each mode are as follows. 00001F40.H (8.0 kHz) 00002B11.H (11.025 Hz) 00005622.H (22.050 Hz) 0000AC44.H (44.10 Hz)
nAvgBytesPerSec	The values of each mode are as follows. 00000FD7.H (8.0 kHz, 4-bit monaural) 00001FAE.H (8.0 kHz, 4-bit stereo) 000015D4.H (11.025 kHz, 4-bit monaural) 00002BA9.H (11.025 kHz, 4-bit stereo) 00002B5C.H (22.05 kHz, 4-bit monaural) 000056B9.H (22.05 kHz, 4-bit stereo) 0000566D.H (44.10 kHz, 4-bit monaural) 0000ACDB.H (44.10 kHz, 4-bit stereo) Definition: nSamplesPerSec*nBlockAlign/wSamplesPerBlock
nBlockAlign	The values of each mode are as follows. 0100.H (8.0 kHz, 4-bit monaural) 0200.H (8.0 kHz, 4-bit stereo) 0100.H (11.025 kHz, 4-bit monaural) 0200.H (11.025 kHz, 4-bit stereo) 0200.H (22.05 kHz, 4-bit monaural) 0400.H (22.05 kHz, 4-bit stereo) 0400.H (44.10 kHz, 4-bit monaural) 0800.H (44.10 kHz, 4-bit stereo) Although the definition is (N+1) * 4 * nChannels, the use of 256 * nChannels * max (1,nSamplesPerSec / 11.025kHz) is recommended.
wBitsPerSample	0004.H (4 bits)
cbSize	0002.H

Table 29 IMA-ADPCM Format fmt-ck and fact-ck Information (2)

IMA-ADPCM (DVI-ADPCM) Format	
extByte[cbSize]	The values of each mode are as follows. 01F9.H (8.0 kHz, 4-bit monaural) 01F9.H (8.0 kHz, 4-bit stereo) 01F9.H (11.025 kHz, 4-bit monaural) 01F9.H (11.025 kHz, 4 bit stereo) 03F9.H (22.05 kHz, 4-bit monaural) 03F9.H (22.05 kHz, 4-bit stereo) 07F9.H (44.10 kHz, 4-bit monaural) 07F9.H (44.10 kHz, 4-bit stereo) If the definition is, wSamplesPerBlock (an unsigned 16-bit integer indicating the samples per channel-unit block), and X = (nBlockAlign -(4 * nChannels))* 8 Y = wBitsPerSample * nChannels then, wSamplesPerBlock =(X/Y)+1
dwSampleLength	It is recommended that the actual number of samples that can be played back be recorded. The definition is as follows. If X = ckSize_of_data-ck/nBlockAlign then, dwSampleLength = (X+1) * wSamplesPerBlock

The IMA-ADPCM audio data contained in *data-ck* is packed as shown in Fig. 41, Fig. 42, and Fig. 43 when it is recorded.

A feature of this format is the existence of a header at the start of each block. The header records the initial sample value for that block and a step (quantization table) index. The audio data in each channel is independent, so the number of header words is the same as the number of channels.

A header word consists of 4 bytes, and is defined as in [equation 5]. The existence of a header means IMA-ADPCM audio data can be played from any block. In other words, random access is possible on a per-block basis.

In Fig. 41 to Fig. 43, the left-hand byte stores the lower address and the right-hand byte holds the upper address.

```
typedef struct {
        signed int    iSamp0;              // Initial sample value of the block
        unsigned char   bStepTableIndex;   // Step table index
        unsigned char   bReserved;         // reserved byte
} IMA_ADPCMBLOCKHEADER;                                    - - -[Equation 5]
```

In Fig. 41 to Fig. 43, N, M, and P have the following significance.

N = (nBlockAlign/(4*nChannels)) - 1 - - -[Equation 6]

M = 0, 1, 2, 3, ... , N-1 - - -[Equation 7]

P = (M * 8) + 1 - - -[Equation 8]

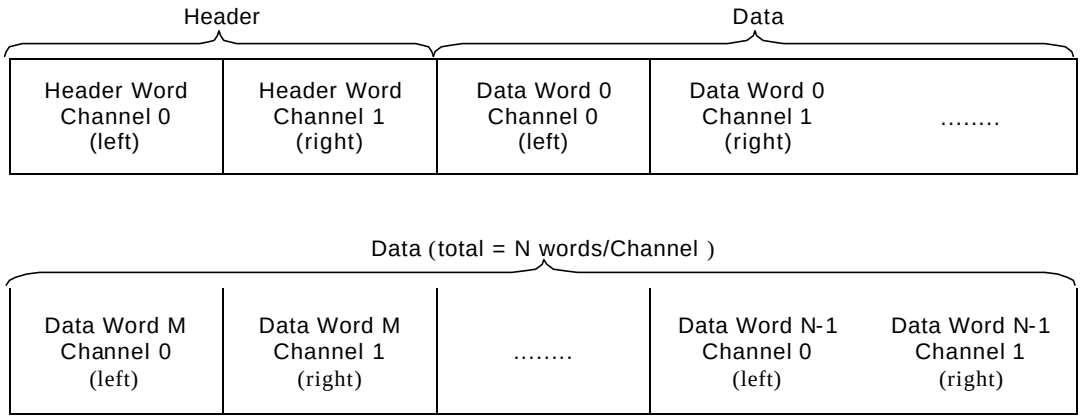

Fig. 41 Packing of IMA-ADPCM Audio Data

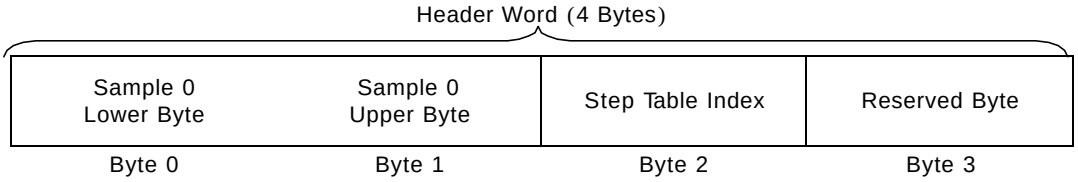

Fig. 42 Header Word of IMA-ADPCM Audio Data

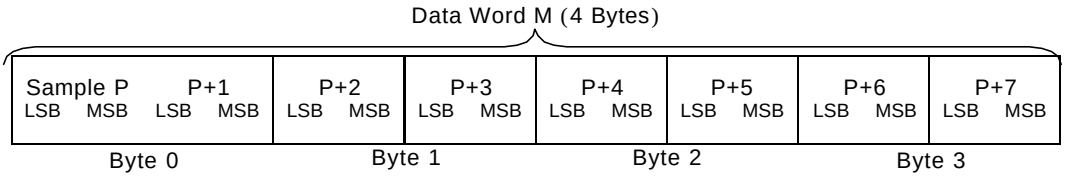

Fig. 43 Data Word M of IMA-ADPCM Audio Data

3.6. Chunks Used

The chunks used in Exif audio files are described here.

3.6.1. WAVE Form Audio File Basic Chunks

The basic chunks of a WAVE Form Audio File, as is evident from the basic structure of the *WAVE* file shown in Fig. 32, are the four below.

- RIFF chunk
- fmt chunk
- fact chunk
- data chunk

[Additional Explanation]

- The fmt chunk, fact chunk and data chunk are sub-chunks of the *RIFF* chunk. A *WAVE* file consists of one *RIFF* chunk, with specific information recorded in the sub-chunks.
- Only when the form type is PCM (Pulse Code Modulation) format, the fact chunk is unnecessary. With non-PCM formats such as μ-Law and IMA-ADPCM, it is mandatory, which is why *fact-ck* is included in the basic chunks here.
- It is possible to add other optional sub-chunks as well.
- At the head of the chunk data (*ckData*) of the *RIFF* chunk there is a form type called "*WAVE*".

3.6.2. LIST Chunk and INFO List

A *WAVE* form and other *RIFF* forms store a variety of information in sub-chunks of the *RIFF* chunk. These sub-chunks in many cases are specific to each form type; but there are also general-purpose chunks for storing additional information regardless of the data specified for a given form type.

One of these general-purpose chunks is the *LIST* chunk. Here the use of the *LIST* chunk is explained.

(1) LIST Chunk

The *LIST* chunk is a general-purpose chunk that can be used with the files of many different form types. The *LIST* chunk is a pre-registered general-purpose chunk, so its *ckID* (chunk ID) is written in upper-case letters.

Included in the *LIST* chunk is a sub-chunk list (series of sub-chunks) and sequence designation.

The *LIST* chunk *ckData* (chunk data) consists of a four-character code at the beginning called a listType (list type), followed by the sub-chunk list.

This structure resembles that of the *RIFF* chunk, but the *LIST* chunk is always farther down the hierarchy than the *RIFF* chunk.

The list type is used to identify the list contents. For this reason there are list types that are used only with certain form types. If a list type is encountered that cannot be Interoperability, that *LIST* chunk can be ignored.

The list type must be registered. A general-purpose list type that is registered and can be used with various form types is written in all upper-case letters.

A list type that can be used only with a specific form type is written in lower-case letters.

The *LIST* chunk structure is illustrated in Fig. 44.

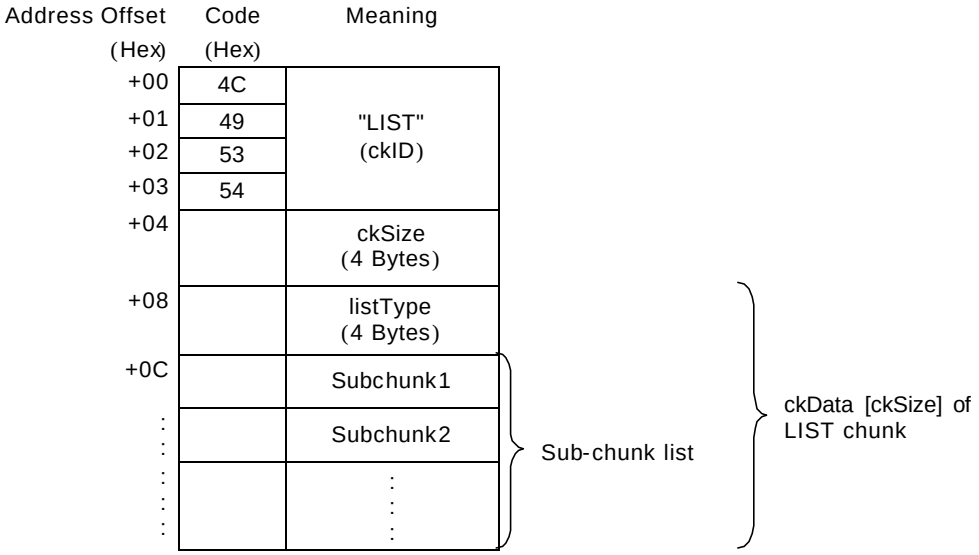

Fig. 44 LIST Chunk Structure

(2) INFO List

An *"INFO list"* is a *LIST* chunk having the registered, general-purpose listType *"INFO"*.

The need for information such as title, copyright and comments is similar in each of the form types. The *INFO list* is used for storing these kinds of information.

The information itself in an *INFO list* is stored in the sub-chunk lists. These sub-chunks use only pre-registered, general-purpose chunks, described later below.

The *INFO list* information is supplementary and has no influence on the Interoperability of the main data, such as WAVE form audio data. It can therefore be skipped without problem. If an unknown chunk is included on the *INFO list*, as when a new chunk has been defined, it is to be ignored.

The *INFO list* chunks currently defined are given in Table 30. These pre-registered chunks are stored as ASCII text strings terminated by NULL (the final byte is '00.H').

Table 30 INFO List Chunks

Channel ID	Description
IARL	Archival Location. Indicates where the subject of the file is archived.
IART	Artist. Lists the artist of the original subject of the file.
ICMS	Commissioned. Lists the name of the person or organization that commissioned the subject of the file.
ICMT	Comments. Provides general comments about the file or the subject of the file.
ICOP	Copyright. Records the copyright information for the file.
ICRD ICRP	Creation date. Indicates the date the subject of the file was created. Cropped. Indicates whether an image has been cropped
IDIM	Dimensions. Specifies the size of the original subject of the file.
IDPI	Dots Per Inch. Stores the dots per inch (DPI) setting of the digitizer used to produce the file.
IENG	Engineer. Stores the name of the engineer who worked on the file.
IGNR	Genre. Describes the genre of the original work.
IKEY	Keywords. Provides a list of keywords that refer to the file or subject of the file.
ILGT	Lightness. Describes the changes in lightness settings on the digitizer required to produce the file.
IMED	Medium. Describes the original subject of the file, such as, "computer image," "drawing," "lithograph," and so forth.
INAM	Name. Stores the title of the subject of the file.
IPLT	Palette Setting. Specifies the number of colors requested when digitizing an image.
IPRD	Product. Specifies the name of the title the file was originally intended for, such as "Encyclopedia of Pacific Northwest Geography."
ISBJ	Subject. Describes the file contents, such as "Aerial view of Seattle."
ISFT	Software. Identifies the name of the software package used to create the file.
ISHP	Sharpness. Identifies the changes in sharpness for the digitizer required to produce the file.
ISRC	Source. Identifies the name of the person or organization who supplied the original subject of the file.
ISRF	Source Form. Identifies the original form of the material that was digitized, such as "slide," "paper," "map," and so forth.
ITCH	Technician. Identifies the technician who digitized the subject file.

A typical *INFO list* is shown in Fig. 45.

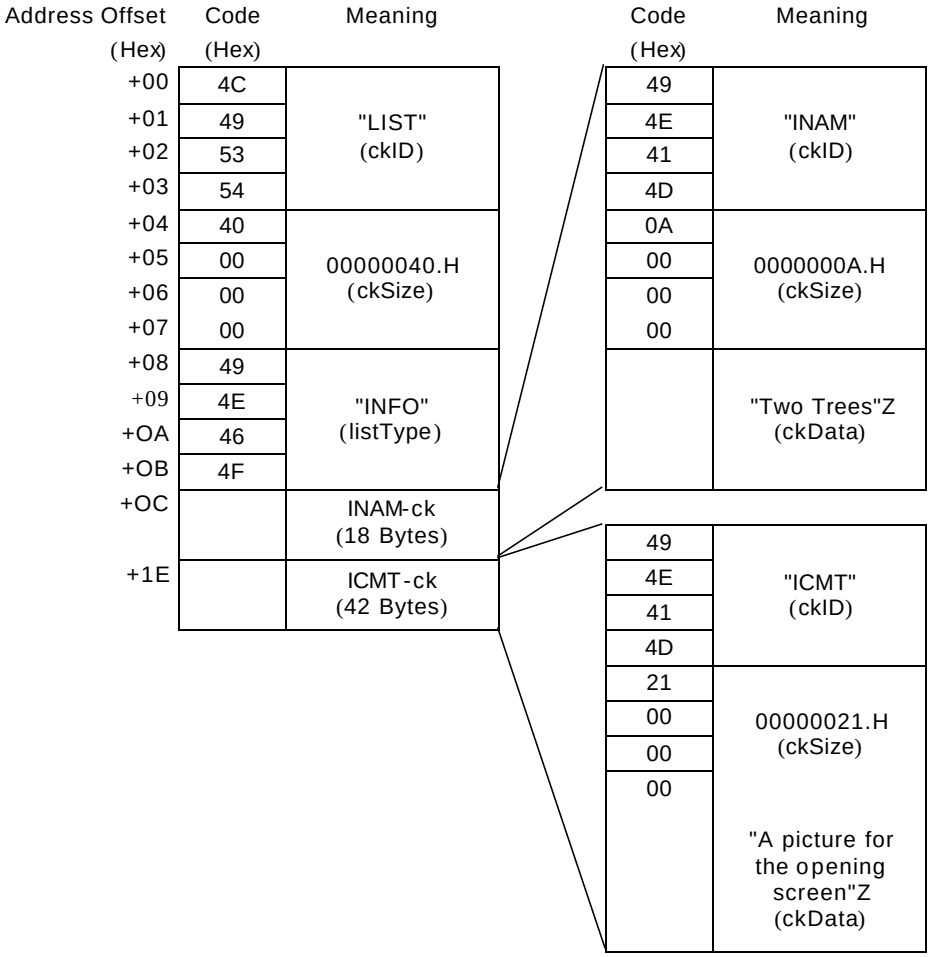

Fig. 45 Typical INFO List

The following points need to be observed in using the *INFO list*. They are explained in reference to Fig. 45.

- The 'Z' at the end of the text string information in the *INAM* and *ICMT* chunks means NULL termination. The actual code appended is '00.H'.
- The chunk data (*ckData*) in each chunk must be an even number of bytes. If the data itself is an odd number of bytes, it must be padded by one additional byte.
- In the example in Fig. 45, the *ICMT* chunk has 33 bytes of information including the NULL termination, so a padding byte '00.H' must be appended. No padding is necessary with the *INAM* chunk information, since the size including NULL termination is 10 bytes.
- The value of the chunk size (*ckSize*) of the *ICMT* chunk does not include the padding byte. However, the chunk size of the *LIST* chunk that is its parent chunk must include the padding bytes in the sub-chunks. If this

rule is not observed, it will not be possible to determine the start address of a chunk following after this *LIST* chunk.

(3) INFO List used by Exif audio files

The *INFO list* used with Exif audio files is as follows.

The chunks that can be included on the *INFO list* are those given in Table 30; but of these, only the following are used with Exif audio files.

[Chunks Used with Exif]

INAM

Records the title of the Exif audio file. The title is written in an ASCII string and terminated with NULL. Recording this information is optional.

Ex.) "Exif Audio File Example"Z

IGNR

Records the genre of the Exif audio file subject. The genre name is written in an ASCII string and terminated with NULL. Recording this information is optional.

Ex.) "narration"Z

ICRD

Records the date the Exif audio file was created. It is written as a fixed-length ASCII string, in the format year-month-day. That is, the year, month, and day are separated by a hyphen. The year is four digits, while month and day are two digits each. If the number of the month or the day is less than 10, the first digit is 0. The order must be year-month-day. Since this information is written as an ASCII string, it must be terminated with NULL. This chunk is fixed-length (the chunk data is 11 bytes, and a padding byte is added to make it an even byte number). Recording this information is optional.

Ex.) "1997-04-08"Z (Note: =April 8, 1997)

ICMT

Records a general comment on the Exif audio file or its subject. Comments are written in ASCII text terminated with NULL. If there are two or more comments, each statement ends with a period. A carriage return or line feed character must not be used. Recording this information is optional.

Ex.) "Recorded by Digital Still Camera"Z

IART

Records the name of the Exif audio file creator. The name is written in an ASCII string and terminated with NULL.

Recording this information is optional.

Ex.) "Taro Yamada"Z

ICOP

Records copyright information for the Exif audio file. The copyright is written in ASCII text and terminated with NULL. In case of multiple copyright information, each is separated by a semicolon followed by one blank space (20.H). Recording this information is optional.

Ex.) "Copyright Exif Corporation 1997."Z

[Notes and Additional Information]

- A camera shall not record chunks other than those listed above.
- If a camera encounters an unknown chunk when reading the *INFO list*, it shall skip that chunk. It is possible that the *INFO list* will be expanded in the future, and this provision ensures that compatibility will be maintained.
- Information shall be recorded in accord with the general *INFO list* stipulations.
- All the information on the *INFO list* is optional, and does not have to be recorded.
- The *INFO list* used for Exif audio files consists of pre-registered, general-purpose chunks only, which means this information can be read by commercial "RIFF Form Reader" software (such as the utility software provided with Windows™).

3.6.3. Chunks for Attribute Information Specific to Exif Audio Files

Recording of attribute information specific to Exif audio files is done as follows.

Exif-specific attributes are those not defined for ordinary WAVE Form Audio Files but only for Exif audio files. This is auxiliary information with no influence on Interoperability of the audio data itself. For this reason an Exif audio file can still be compatible with a standard WAVE Form Audio File.

The attributes specific to Exif audio files are recorded as follows.

(1) LIST chunk is used.

The compatibility noted above is realized by using a pre-registered, general-purpose *LIST* chunk to record the attribute information specific to Exif audio files. Since it can be used with all the *LIST* chunk form types, this chunk can be put in the WAVE Form Audio File. The individual information is recorded in sub-chunks of the *LIST* chunk.

(2) A dedicated list type "exif" is defined.

The information in the *LIST* chunk is explicitly labeled as information specific to Exif audio files by defining a dedicated list type. The following is used as this list type.

- Dedicated Exif list type: "exif" (all lower-case letters)

The attributes specific to Exif audio files cannot be used in the WAVE Form Audio File format, so it is all written in lower-case letters.

Hereafter, the notation "exif list" is used to mean the *LIST* chunk whose list type is exif.

(3) A dedicated chunk is defined for each of the attributes.

Since there are no corresponding existing chunks, a dedicated chunk is defined to record the attribute information specific to Exif audio files. The information items and their chunks are described below.

[Information items and chunks]

ever

Records the version information (number) of this standard.

As with Exif image files, it is recorded in 4 bytes. The address bytes are recorded as A1, A2, B1, B2, starting with the lowest number. A1 and A2 store the upper part of the standard version, with the lower part stored in B1 and B2. A1, A2, B1 and B2 are ASCII numerals giving the version number, but NULL termination is unnecessary. This chunk is mandatory.

On the conventions for version number updating, see section 3.2.

Ex.) "0200" (Note: =Version 2.00)

erel

Records information pointing to an Exif image file related to the Exif audio file recorded in this chunk. Recording this information makes it possible for a camera or application software to map an image to sound during playback.

The relational information consists of the name of the corresponding Exif image file, given as an 8-character file name plus 3-character extension in ASCII format. The path is not written. Stipulations on images are given in section 2.6.5. File naming rules are covered in section 3.7.1.

The mapping of Exif image files and audio files is done in any of the three ways shown in Table 31. If multiple files are mapped to one file as in [2] or [3] of Table 31, the above format is used to record just one destination file name. If there are multiple destination files, the first recorded file is given.

In the case of [2] in Table 31, for the Exif audio file "SND00001.WAV" only "DSC00001.JPG" is given as the related image file. When there are three Exif image files "DSC00001.JPG," "DSC00002.JPG" and "DSC00003.JPG," the related Exif audio file name for each of them, "SND00001.WAV," is indicated. By combining multiple relational information, a variety of playback possibilities can be supported. The method of using relational information is left to the implementation on the playback side. Since this information is an ASCII character string, it is terminated by NULL. If there is a related Exif image file, this chunk is mandatory.

Ex.) "DSC00001.JPG"Z

Table 31 Mapping between Image and Audio Files

	Relationship	Exif Image File	Exif Audio File
[1]	1 to 1	DSC00001.JPG	SND00001.WAV
[2]	Many to 1	DSC00001.JPG DSC00002.JPG DSC00003.JPG	SND00001.WAV
[3]	1 to many	DSC00001.JPG	SND00001.WAV SND00002.WAV SND00003.WAV

etim

Records the time of Exif audio file creation. This is defined as the time the recording of audio data was started. Time is expressed as a variable-length ASCII string. In order to conform as closely as possible to the Exif image file, time is recorded in the format "hour:minute:second.subsecond," with a colon in between each time unit and a period before the subsecond position.

Hour, minute and second are written as two digits each, with the first digit a zero if the value is one digit. Subseconds can be expressed to any desired decimal place. If there is no subsecond information, the string ends with a period only.

The order of time units is hour, minute, second, subsecond. The information is written as an ASCII string, so it must be terminated with NULL. Recording this information is optional.

Ex.) "10:05:10.130"Z

ecor

Records the name of the manufacturer of the equipment on which the Exif audio file was created. The manufacturer name is written in an ASCII string and terminated with NULL. Recording this information is optional.

Ex.) "Digital Still Camera Corporation"Z

emdl

Records the model name of the equipment on which the Exif audio file was created. The model name is written in an ASCII string and terminated with NULL. Recording this information is optional.

Ex.) "DSCamera1000"Z

emnt

As with Exif image files, this chunk is used by the writer manufacturer to record design information, version history and other maker-specific information. The contents and format of the information are up to each manufacturer.

Other manufacturers see this information only as a byte array of the size determined by the chunk size (*ckSize*).

Recording this information is optional.

eucm

Records user comment information that cannot be recorded on, or is not suitable for, the *INFO list*. Basically this is text information. Character code information is included so languages that do not use ASCII can be used here. Recording this chunk is optional.

Recording of user comments is discussed below. The structure of the user comment chunk is shown in Fig. 46.

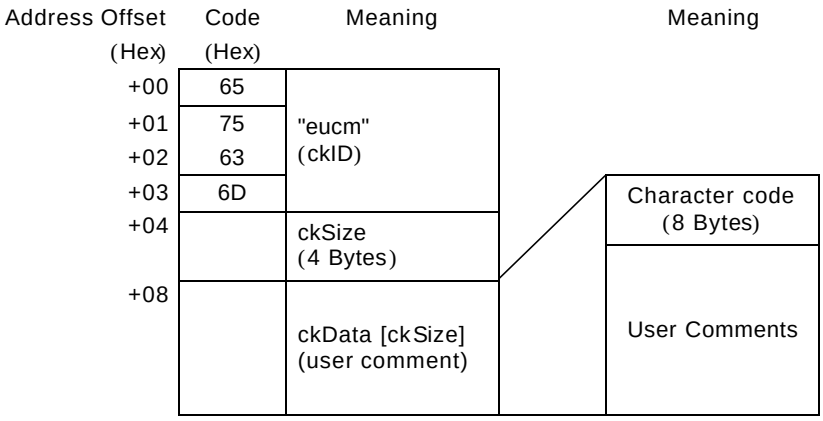

Fig. 46 Structure of User Comment Chunk

As seen in Fig. 46, the chunk data area storing the user comment starts with an 8-byte character code area, where the character code is given. The rest of the chunk data area is the user comment area, used for writing comments. The currently defined character codes are shown in Table 32. A registration system is used for character codes to avoid duplication. When a character code is registered, a standard document is indicated in the reference column to indicate the character format specification. If a character code is used for which there is no clear specification like Shift-JIS in Japan, Undefined is designated.

The character code is written from the start of the character code area, and the unused portion is padded with NULL ('00.H'). In order to match the format of the actual comments in the user comment part to that of the Exif image file *UserComment* tag, NULL termination is not used even if the comment is written in ASCII text. In accord with the chunk specification, however, a padding byte ('00.H') is used if the chunk data is not an even number of bytes.

Table 32 Character Codes and Character Code Designation

Character Code	Code Designation (8 Bytes)	Reference
ASCII	41.H, 53.H, 43.H, 49.H, 49.H, 00.H, 00.H, 00.H	ITU-T T.50 IA5 [x]
JIS	4A.H, 49.H, 53.H, 00.H, 00.H, 00.H, 00.H, 00.H	JIS X0208-1990 [xi]
Unicode	55.H, 4E.H, 49.H, 43.H, 4F.H, 44.H, 45.H, 00.H	Unicode Standard [xii]
Undefined	00.H, 00.H, 00.H, 00.H, 00.H, 00.H, 00.H, 00.H	Undefined

[Notes and Additional Information]

- The above chunks incorporated in exif list are used with a specific form type ('*WAVE*') and are therefore written in all lower-case letters.
- Only the *ever* chunk is mandatory; the others are optional. If an Exif image file related to an audio file exists, the *erel* chunk is also mandatory.
- When the exif list is read by a camera, information that cannot be recognized may be encountered, such as the *emnt* chunk or an Undefined string in the *eucm* chunk. In that case the chunk is to be skipped.
- An Exif reader and writer must conform to the stipulations for an ordinary *LIST* chunk.
- A general-purpose RIFF Form Reader will ignore the exif list. A dedicated Exif reader is required for reading the exif list.
- Fig. 47 shows the exif list structure and a coding example. The *ever* chunk is mandatory and has a fixed length (chunk data is 4 bytes). The *erel* chunk data is 13 bytes (odd), so a padding byte is added. The *erel* chunk is also fixed length.

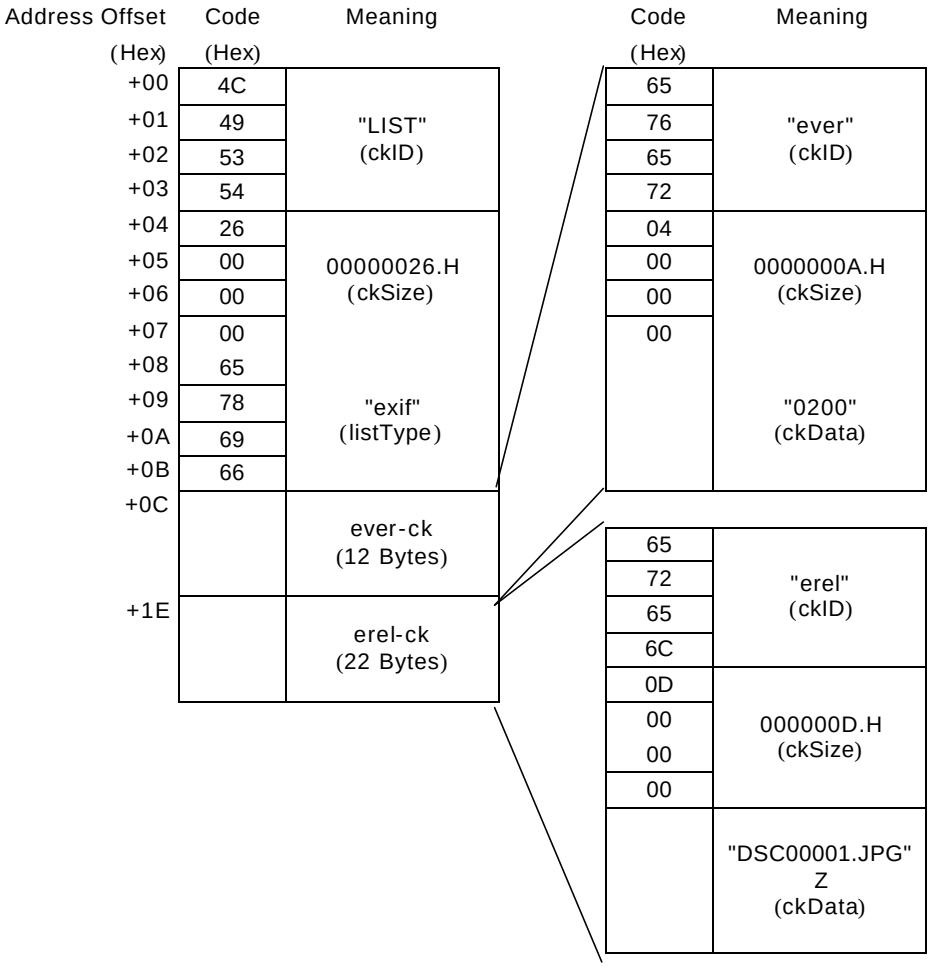

Fig. 47 exif List Structure and Typical Coding

3.7. Data Description

3.7.1. File Naming Stipulation

The file name and characters used for file names are not specified, other than to stipulate the use of ASCII alphanumerics. (File names in Japanese or other character sets are not to be used.) File names shall be 8 characters or fewer, not including the extension. (Long file names are not to be used.) The file extension is ".WAV" (to match the WAVE Form Audio File extension) regardless of the audio data format type.

Typical Exif Audio File Fig. 48 shows the configuration of a typical Exif audio file.

The shaded parts of Fig. 48 are the mandatory elements of an Exif audio file. The hatching (*fact-ck* only) means that this chunk is not required if the audio data is PCM (Pulse Code Modulation) format, but is mandatory for all non-PCM formats (μ-Law, IMA-ADPCM), etc. The non-shaded elements are optional.

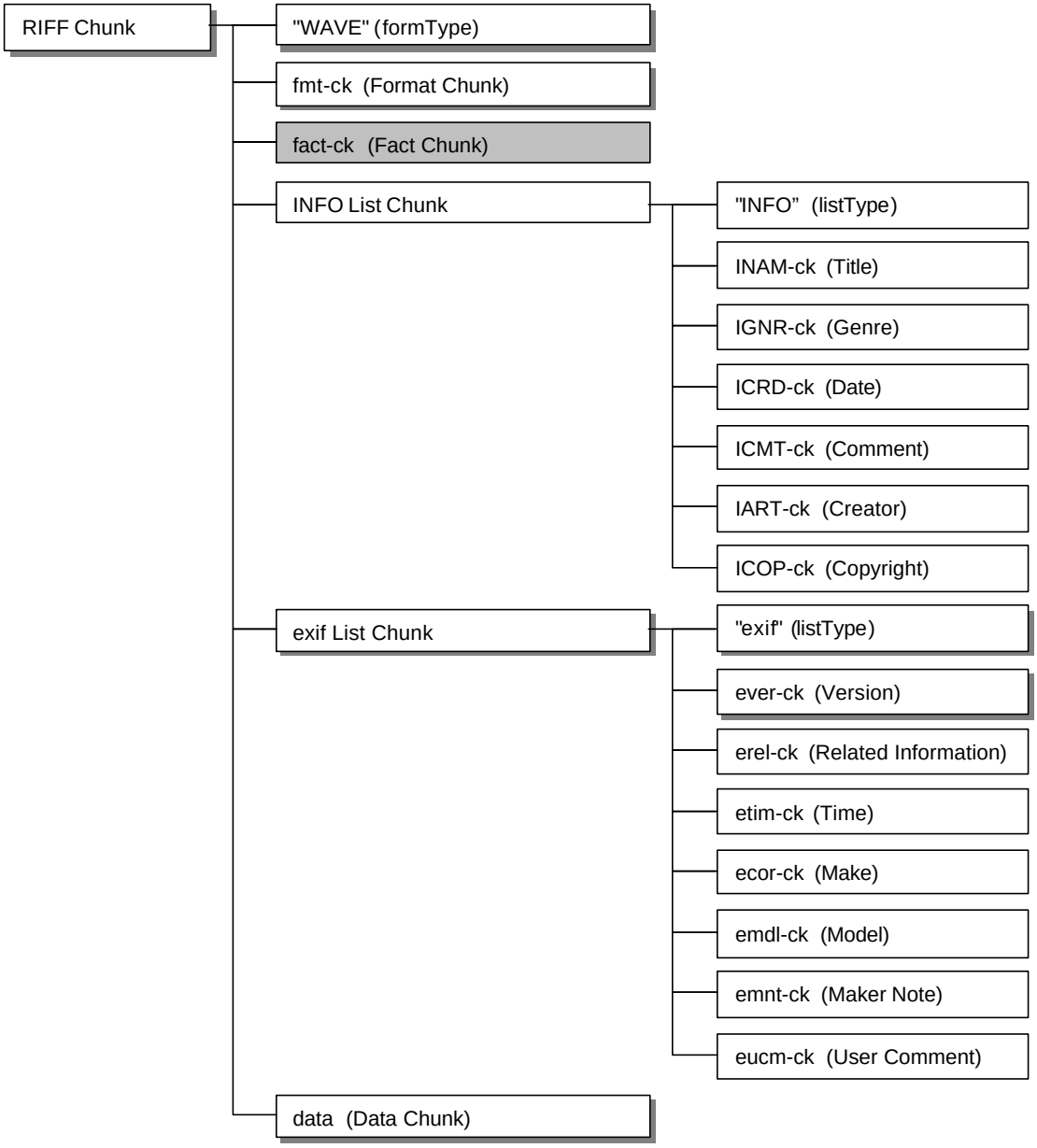

Fig. 48 Exif Audio File Configuration

The means of recording the data of each element is given in the section for that element.

Fig. 49 shows the most common Exif audio file data structure. Exif audio file data is recorded in accord with the structure shown in Fig. 49. Each sub-chunk is recorded in accord with its stipulations. Optional chunks may be omitted.

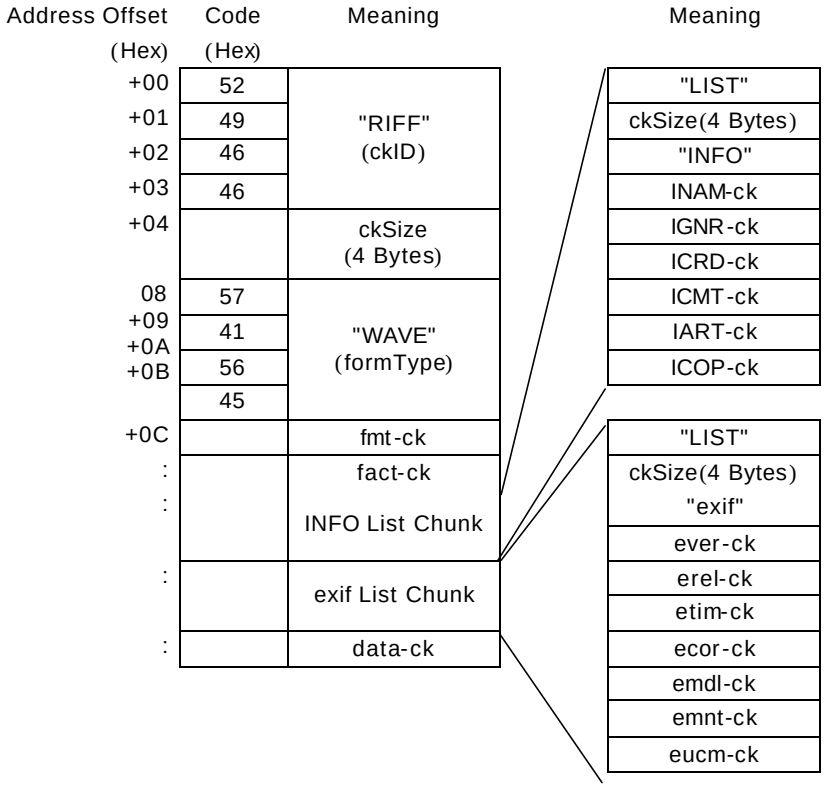

Fig. 49 Data Structure of a Typical Exif Audio File

Appendix A Image File Description Examples

A.1 Uncompressed RGB File

Table 33 Uncompressed RGB File Description Sample Contents

Primary Image	
Pixels	640 (W) x 480 (H)
Image Title	Exif_TIFF_RGB
Image Input Equipment Manufacturer	DSCompany
Image Input Equipment Model Name	Example
Orientation	Normal
Strips	96
Lines per Strip	5
Bytes per Strip	9600
Image Resolution	72 dpi (Width), 72 dpi (Length)
Image Data Arrangement	Chunky
File Change Date and Time	1997:09:01 12:00:00.000
Copyright	Copyright, ABCDE,1997
Exif-specific Information	
Version	Ver. 2.0
Date and Time of Original Image Creation	1997:09:01 12:00:00.000
Date and Time of File Creation	1997:09:01 12:00:00.000
Thumbnail	
Pixels	80 (W) x 60 (H)
Orientation	Normal
Strips	1
Lines per Strip	60
Bytes per Strip	14400
Image Resolution	72 dpi (Width), 72 dpi (Length)

Table 34 Uncompressed RGB File Description Sample

Header	**Offset (Hex)**	**Name**	**Data (Hex or "ASCII")**			
	0000	Byte Order	4D4D ("MM")			
	0002	42	002A			
	0004	0th IFD Offset	00000008			
	Offset (Hex)	**Name**	**Interoperability Number (Hex)**			
	0008	Number of Interoperability	0014			
0th IFD	**Offset (Hex)**	**Name**	**Tag ID (Hex)**	**Type (Hex)**	**Count (Hex)**	**ValueOffset (Hex or "ASCII")**
	000A	ImageWidth	0100	0004	00000001	00000280
	0016	ImageLength	0101	0004	00000001	000001E0
	0022	BitsPerSample	0102	0003	00000003	000000FE
	002E	Compression	0103	0003	00000001	00010000
	003A	PhotometricInterpretation	0106	0003	00000001	00020000
	0046	ImageDescription	010E	0002	0000000E	00000104
	0052	Make	010F	0002	00000009	00000112
	005E	Model	0110	0002	00000008	0000011C
	006A	StripOffsets	0111	0004	00000060	00000124
	0076	Orientation	0112	0003	00000001	00010000
	0082	SamplesPerPixel	0	0003	00000001	00030000
	008E	RowsPerStrip	0116	0004	00000001	00000005
	009A	StripByteCounts	0117	0004	00000060	000002A4
	00A6	XResolution	011A	0005	00000001	00000424
	00B2	YResolution	011B	0005	00000001	0000042C
	00BE	PlanarConfiguration	011C	0003	00000001	00010000
	00CA	ResolutionUnit	0128	0003	00000001	00020000
	00D6	DateTime	0132	0002	00000014	00000434
	00E2	Copyright	8298	0002	00000015	00000484
	00EE	Exif IFD Pointer	8769	0004	00000001	0000045E
	Offset (Hex)	**Name**	**Offset (Hex)**			
	00FA	Next IFD Offset	000004EC			
Value longer than 4byte of 0th IFD	**Offset (Hex)**	**Name**	**Data (Hex or "ASCII")**			
	00FE	BitPerSample Value	000800080008			
	0104	ImageDescription Value	"Exif_TIFF_RGB"00			
	0112	Make Value	"DSCompany"00			
	011C	Model Value	"Example"00			
	0124	StripOffsets Value	offset0,offset1,offset2.....offset95			
	02A4	StripByteCounts Value	count0, count1, count2....count95			
	0424	XResolution Value	0000004800000001			
	042C	YResolution Value	0000004800000001			
	0434	DateTime Value	"1997:09:01 12:00:00"00			
	0448	Copyright Value (Last Byte is Padded)	"Copyright,ABCDE,1997"0000			
Exif IFD	**Offset (Hex)**	**Name**	**Interoperability Number (Hex)**			
	045E	Exif IFD Number	0008			
	Offset (Hex)	**Name**	**Tag ID (Hex)**	**Type (Hex)**	**Count (Hex)**	**ValueOffset (Hex or "ASCII")**
	0460	ExifVersion	9000	0007	00000004	"0200"
	046C	DateTimeOriginal	9003	0002	00000014	000004C4

	0478	DateTimeDigitized	9004	0002	00000014	000004D8
	0484	SubSecTime	9290	0002	00000004	"000"00
	0490	SubSecTimeOriginal	9291	0002	00000004	"000"00
	049C	SubSecTimeDigitized	9292	0002	00000004	"000"00
	04A8	FlashPixVersion	A000	0007	00000004	"0100"
	04B4	Colorspace	A001	0003	00000001	0001
	Offset (Hex)	**Name**	**Offset (Hex)**			
	04C0	Next IFD Offset	00000000			
Value longer than 4byte of Exif IFD	**Offset (Hex)**	**Name**	**Data (Hex or "ASCII")**			
	04C4	SubSecTimeOriginal Value	"1997:09:01 12:00:00"00			
	04D8	SubSecTimeDigitized Value	"1997:09:01 12:00:00"00			
1st IFD	**Offset (Hex)**	**Name**	**Interoperability Number (Hex)**			
	04EC	Number Of Interoperability	000D			
	Offset (Hex)	**Name**	**Tag ID (Hex)**	**Type (Hex)**	**Count (Hex)**	**ValueOffset (Hex)**
	04EE	ImageWidth	0100	0004	00000001	00000050
	04FA	ImageLength	0101	0004	00000001	0000003C
	0506	BitsPerSample	0102	0003	00000003	0000058E
	0512	Compression	0103	0003	00000001	00010000
	051E	PhotometricInterpretation	0106	0003	00000001	00020000
	052A	StripOffsets	0111	0004	00000001	000005A4
	0536	SamplesPerPixel	011	0003	00000001	00030000
	0542	RowsPerStrip	0116	0004	00000001	0000003C
	054E	StripByteCounts	0117	0004	00000001	00003840
	055A	XResolution	011A	0005	00000001	00000594
	0566	YResolution	011B	0005	00000001	0000059C
	0572	PlanarConfiguration	011C	0003	00000001	00010000
	057E	ResolutionUnit	0128	0003	00000001	00020000
	Offset (Hex)	**Name**	**Offset (Hex)**			
	058A	Next IFD Offset	00000000			
Value longer than 4byte of 1st IFD	**Offset (Hex)**	**Name**	**Data (Hex or "ASCII")**			
	058E	BitPerSample Value	000800080008			
	0594	XResolution Value	0000004800000001			
	059C	YResolution Value	0000004800000001			
	05A4	Thumbnail Image Data Strip	:			
Primary Image	**Offset (Hex)**	**Name**	**Data (Hex or "ASCII")**			
	3DE4	Primary Image Data Strip0	:			
	6364	Primary Image Data Strip1	:			
	:	:	:			
	:	:	:			
	0E2864	Primary Image Data Strip95	:			

A.2 Uncompressed YCbCr File

Table 35 Uncompressed YCbCr File Description Sample Contents

Primary Image	
Pixels	640 (W) x 480 (H)
Image Title	Exif_TIFF_YCC
Image Input Equipment Manufacturer	DSCompany
Image Input Equipment Model Name	Example
Orientation	Normal
Strips	69
Lines per Strip	7
Bytes per Strip	8960
Image Resolution	72 dpi (Width), 72 dpi (Length)
Image Data Arrangement	Chunky
File Change Date and Time	1997:09:01 12:00:00
Pixel Composition	Subsampling = 4:2:2 Chrominance Subsampling point matches luminance point
Copyright	Copyright, ABCDE,1997
Exif-specific Information	
Version	Ver. 2.0
Date and Time of Original Image Creation	1997:09:01 12:00:00
Date and Time of File Creation	1997:09:01 12:00:00
Shutter Speed	59/10 (equivalent to 1/60 sec.)
Aperture	50/10 (equivalent to F:5.6)
Brightness	80/10
Exposure Bias	0/0
Maximum Lens Aperture	200/10
Subject Distance	20/10
Metering Mode	MultiSpot
Light Source	Daylight
Flash ON/OFF	ON
GPS Information	
Version	Ver. 2.0
Measurement Position	North Latitude 35 deg. 48 min. 8 sec., East Longitude 139 deg. 34 min. 55 sec.
Altitude	30.48 meters above sea level
GPS Time	0:00:00
GPS Receiver Movement	Moving at 1km/h at 0 deg. true direction
Image Direction	0 deg. true direction
Geodetic Data Used for Measurement	TOKYO
Thumbnail	
Pixels	80 (W) x 60 (H)
Orientation	Normal
Strips	1
Lines per Strip	60
Bytes per Strip	9600
Image Resolution	72 dpi (Width), 72 dpi (Length)

Table 36 Uncompressed YCbCr File Description Sample

Header	**Offset (Hex)**	**Name**	**Data (Hex or "ASCII")**			
	0000	Byte Order	4D4D ("II")			
	0002	42	2A00			
	0004	0th IFD Offset	08000000			
	Offset (Hex)	**Name**	**Interoperability Number (Hex)**			
	0008	Number of Interoperability	1700			
0th IFD	**Offset (Hex)**	**Name**	**Tag ID (Hex)**	**Type (Hex)**	**Count (Hex)**	**ValueOffset (Hex or "ASCII")**
	000A	ImageWidth	0001	0400	01000000	80020000
	0016	ImageLength	0101	0400	01000000	E0010000
	0022	BitsPerSample	0201	0300	03000000	22010000
	002E	Compression	0301	0300	01000000	01000000
	003A	PhotometricInterpretation	0601	0300	01000000	06000000
	0046	ImageDescription	0E01	0200	0E000000	28010000
	0052	Make	0F01	0200	09000000	36010000
	005E	Model	1001	0200	08000000	40010000
	006A	StripOffsets	1101	0400	45000000	48010000
	0076	Orientation	1201	0300	01000000	01000000
	0082	SamplesPerPixel	1501	0300	01000000	03000000
	008E	RowsPerStrip	1601	0400	01000000	07000000
	009A	StripByteCounts	1701	0400	45000000	5C020000
	00A6	XResolution	1A01	0500	01000000	70030000
	00B2	YResolution	1B01	0500	01000000	78030000
	00BE	PlanarConfiguration	1C01	0300	01000000	01000000
	00CA	ResolutionUnit	2801	0300	01000000	02000000
	00D6	DateTime	3201	0200	14000000	80030000
	00E2	YCbCrSubSampling	1202	0300	02000000	02000100
	00EE	YCbCrPositioning	1302	0300	01000000	02000000
	00FA	Copyright	9882	0200	15000000	94030000
	0106	Exif IFD Pointer	6987	0400	01000000	AA030000
	0112	GPS IFD Offset	2588	0400	01000000	10050000
	Offset (Hex)	**Name**	**Offset (Hex)**			
	011E	Next IFD Offset	7E060000			
Value longer than 4byte of 0th IFD	**Offset (Hex)**	**Name**	**Data (Hex or "ASCII")**			
	0122	BitPerSample Value	080008000800			
	0128	ImageDescription Value	"Exif_TIFF_YCC"00			
	0136	Make Value	"DSCompany"00			
	0140	Model Value	"Example"00			
	0148	StripOffsets Value	(offset0,offset1,offset2.....offset95)			
	025C	StripByteCounts Value	(count0, count1, count2....count95)			
	0370	XResolution Value	4800000001000000			
	037C	YResolution Value	4800000001000000			
	0380	DateTime Value	"1997:09:01 12:00:00"00			
	0394	Copyright Value (Last Byte is Padded)	"Copyright,ABCDE,1997"0000			
Exif IFD	**Offset (Hex)**	**Name**	**Interoperability Number (Hex)**			
	03AA	Exif IFD Number	1400			

	Offset (Hex)	Name	Tag ID (Hex)	Type (Hex)	Count (Hex)	ValueOffset (Hex or "ASCII")
	03AC	ExposureTime	9A82	0500	01000000	A0040000
	03B8	FNumber	9D82	0500	01000000	A8040000
	03C4	ExifVersion	0090	0700	04000000	"0200"
	03D0	DateTimeOriginal	0390	0200	14000000	B0040000
	03DC	DateTimeDigitized	0490	0200	14000000	C4040000
	03E8	ShutterSpeedValue	0192	0A00	01000000	D8040000
	03F4	ApertureValue	0292	0500	01000000	E0040000
	0400	BrightnessValue	0392	0A00	01000000	E8040000
	040C	ExposureBiasValue	0492	0A00	01000000	F0040000
	0418	MaxApertureRatioValue	0592	0500	01000000	F8040000
	0424	SubjectDistance	0692	0500	01000000	00050000
	0430	MeteringMode	0792	0300	01000000	01000000
	043C	LightSource	0892	0300	01000000	01000000
	0448	Flash	0992	0300	01000000	01000000
	0454	FocalLength	0A92	0500	01000000	08050000
	0460	SubSecTime	9092	0200	04000000	"000"00
	046C	SubSecTimeOriginal	9192	0200	04000000	"000"00
	0478	SubSecTimeDigitized	9292	0200	04000000	"000"00
	0484	FlashPixVersion	A000	0700	04000000	"0100"
	0490	ColorSpace	A001	0300	01000000	01000000
	Offset (Hex)	**Name**			**Offset (Hex)**	
	049C	Next IFD Offset			00000000	
Value longer than 4 Bytes of Exif IFD	**Offset (Hex)**	**Name**			**Data (Hex or "ASCII")**	
	04A0	ExposureTime Value			010000003C000000	
	04A8	FNumber Value			0400000001000000	
	04B0	DateTimeOriginal Value			"1997:09:01 12:00:00"00	
	04C4	DateTimeDigitized Value			"1997:09:01 12:00:00"00	
	04D8	ShutterSpeed Value			0600000001000000	
	04E0	ApertureValue Value			0400000001000000	
	04E8	BrightnessValue Value			0000000001000000	
	04F0	ExposureBiasValue Value			0000000001000000	
	04F8	MaxApertureRatio Value			0100000001000000	
	0500	SubjectDistance Value			0F0000000A000000	
	0508	FocalLength Value			3200000001000000	
GPS IFD	**Offset (Hex)**	**Name**			**Interoperability Number (Hex)**	
	0510	GPS IFD Number			0013	
	Offset (Hex)	**Name**	**Tag ID (Hex)**	**Type (Hex)**	**Count (Hex)**	**ValueOffset (Hex or "ASCII")**
	0512	GPSVersionIF	0000	0100	04000000	02000000
	051E	GPSLatitudeRef	0100	0200	02000000	"N"000000
	052A	GPSLatitude	0200	0500	03000000	FA050000
	0536	GPSLongitudeRef	0300	0200	02000000	"E"000000
	0542	GPSLongitude	0400	0500	03000000	12060000
	054E	GPSAltitudeRef	0500	0100	01000000	00000000
	055A	GPSAltitude	0600	0500	01000000	2A060000
	0566	GPSTimeStamp	0700	0500	03000000	32060000
	0572	GPSSatellites	0800	0200	0D000000	4A060000
	057E	GPSStatus	0900	0200	02000000	"A"000000
	058A	GPSMeasureMode	0A00	0200	02000000	"2"000000
	0596	GPSDOP	0B00	0500	01000000	58060000

	05A2	GPSSpeedRef	0C00	0200	02000000	"K"000000
	05AE	GPSSpeed	0D00	0500	01000000	60060000
	05BA	GPSTrackRef	0E00	0200	02000000	"T"000000
	05C6	GPSTrack	0F00	0500	01000000	68060000
	05D2	GPSImgDirectionRef	1000	0200	02000000	"T"000000
	05DE	GPSImgDirection	1100	0500	01000000	70060000
	05EA	GPSMapDatum	1200	0200	06000000	78060000
	Offset (Hex)	**Name**	**Offset (Hex)**			
	05F6	Next IFD Offset	00000000			
Value longer than 4 Bytes of GPS IFD	**Offset (Hex)**	**Name**	**Data (Hex or "ASCII")**			
	05FA	GPSLatitude Value	230000000100000030000000010000000800000001000000			
	0612	GPSLongitude Value	8B0000000100000022000000010000003700000001000000			
	062A	GPSAltitude Value	E80B000064000000			
	0632	GPSTimeStamp Value	0000000001000000000000000100000000000000001000000			
	064A	GPSSatellites Value (Last Byte is padded)	"2,7,14,15,16"0000			
	0658	GPSDOP Value	0100000001000000			
	0660	GPSSpeed Value	0000000001000000			
	0668	GPSTrack Value	0000000001000000			
	0670	GPSImgDirection Value	0000000001000000			
	0678	GPSMapDatum Value	"TOKYO"00			
1st IFD	**Offset (Hex)**	**Name**	**Interoperability Number (Hex)**			
	067E	Number Of Interoperability	0F00			
	Offset (Hex)	**Name**	**Tag ID (Hex)**	**Type (Hex)**	**Count (Hex)**	**ValueOffset (Hex or "ASCII")**
	0680	ImageWidth	0001	0400	01000000	50000000
	068C	ImageLength	0101	0400	01000000	3C000000
	0698	BitsPerSample	0201	0300	03000000	38070000
	06A4	Compression	0301	0300	01000000	01000000
	06B0	PhotometricInterpretation	0601	0300	01000000	06000000
	06BC	StripOffsets	1101	0400	01000000	4E070000
	06C8	SamplesPerPixel	1501	0300	01000000	03000000
	06D4	RowsPerStrip	1601	0400	01000000	3C000000
	06E0	StripByteCounts	1701	0400	01000000	80250000
	06EC	XResolution	1A01	0500	01000000	3E070000
	06F8	YResolution	1B01	0500	01000000	46070000
	0704	PlanarConfiguration	1C01	0300	01000000	01000000
	0710	ResolutionUnit	2801	0300	01000000	02000000
	071C	YCbCrSubSampling	1202	0300	02000000	02000100
	0728	YCbCrPositioning	1302	0300	01000000	02000000
	Offset (Hex)	**Name**	**Offset (Hex)**			
	0734	Next IFD Offset	00000000			
Value longer than 4byte of 1st IFD	**Offset (Hex)**	**Name**	**Data (Hex or "ASCII")**			
	0738	BitPerSample Value	080008000800			
	073E	XResolution Value	4800000001000000			
	0746	YResolution Value	4800000001000000			
	074E	(Thumbnail Image Data Strip)				
Primary Image Data	**Offset (Hex)**	**Name**	**Data (Hex or "ASCII")**			
	2CCE	Image Data Strip0	:			

4FCE	Image Data Strip1	:
:	:	:
:	:	:
0978CE	Image Data Strip68	:

A.3 JPEG Compressed (4:2:2) File

Table 37 JPEG Compressed (4:2:2) File Description Sample Contents

Primary Image	
Recording Format	JPEG
Subsampling	YCC 4:2:2
Restart Markers	Inserted
Quantization Tables	3
Pixels	640 (W) x 480 (H)
Image Title	Exif_JPEG_422
Image Input Equipment Manufacturer	DS Company
Image Input Equipment Model Name	Example
Orientation	Normal
Image Resolution	72 dpi (Width), 72 dpi (Length)
File Change Date and Time	1997:09:01 12:00:00
Copyright	Copyright, ABCDE,1997
Exif-specific Information	
Version	Ver. 2.0
Date and Time of Original Image Creation	1997:09:01 12:00:00
Date and Time of File Creation	1997:09:01 12:00:00
Components	Y,Cb,Cr
Image Compression Mode	2bit/pel
Shutter Speed	59/10 (equivalent to 1/60 sec.)
Aperture	50/10 (equivalent to F:5.6)
Brightness	80/10
Exposure Bias	0/0
Maximum Lens Aperture	200/10
Subject Distance	20/10
Metering Mode	MultiSpot
Light Source	Daylight
Flash ON/OFF	ON
Thumbnails	
Recording Format	JPEG
Subsampling	YCC 4:2:2
Pixels	80 (W) x 60 (H)
Image Resolution	72 dpi (Width), 72 dpi (Length)

Table 38 JPEG Compressed (4:2:2) File JPEG Stream Description Sample

Offset (Hex)	Maker Segment	Name	Code (Hex)	Comment
0000	SOI	SOI Marker	FFD8	Start of Image
0002	APP1	APP1 Marker	FFE1	
0004		APP1 Length	291C	
0006		Identifier	"Exif"00	
000B		Pad	00	
000C		APP1 Body		See Next Table
0E39	DQT	DQT Marker	FFDB	Define Quantization Table
0E3B		DQT Length	00C5	
0E3D		Pq, Tq	00	
0E3E		table elements	100B0C0E.....	64 Bytes of Data
0E7E		Pq,Tq	01	
0E7F		table elements	0F101016....	64 Bytes of Data
0EBF		Pq,Tq	02	
0EC0		table elements	0F101016....	64 Bytes of Data
0F00	DHT	DHT Marker	FFC4	
0F02		DHT Length	01A2	
0F04		Th	00	Table 0 for DC
0F05		Li	00010501....	
0F15		Vij	00010203....	
0F21		Th	10	Table 0 for AC
0F22		Li	00020103....	
0F32		Vij	01020300....	
0FD4		Th	01	Table 1 for DC
0FD5		Li	00030101....	
0FE5		Vij	00010203....	
0FF1		Th	11	Table 1 for AC
0FF2		Li	00020102....	
1002		Vij	00010203....	
10A4	DRI	DRI Marker	FFDD	
10A6		DRI Length	0004	
10A8		Ri	0004	
10AA	SOF0	SOF0 Marker	FFC0	
10AC		SOF0 Length	0011	
10AE		P	08	
10AF		Y	01E0	
10B1		X	0280	
10B3		Nf	03	
10B4		C1	01	
10B5		H1,V1	21	
10B6		Tq1	00	
10B7		C2	02	
10B8		H2,V2	11	
10B9		Tq2	01	
10BA		C3	03	
10BB		H3,V3	11	
10BC		Tq3	02	
10BD	SOS	SOS Marker	FFDA	
10BF		SOS Length	000C	
10C1		Ns	03	
10C2		Cs1	01	

10C3	Td1,Ta1	00	
10C4	Cs2	02	
10C5	Td2,Ta2	11	
10C6	Cs3	03	
10C7	Td3,Ta3	11	
10C8	Ss	00	
10C9	Se	3F	
10CA	Ah,Al	00	
10CB	Image Data	F36A....	Compressed Data
111C4	EOI	FFD9	

Table 39 JPEG Compressed (4:2:2) File APP1 Description Sample

	Offset (Hex)	Name	Data (Hex or "ASCII")			
Header	0000	Byte Order	4D4D ("II")			
	0002	42	2A00			
	0004	0th IFD Offset	08000000			
	Offset (Hex)	**Name**	**Interoperability Number (Hex)**			
	0008	Number of Interoperability	0B00			
	Offset (Hex)	**Name**	**Tag ID (Hex)**	**Type (Hex)**	**Count (Hex)**	**ValueOffset (Hex or "ASCII")**
0th IFD	000A	ImageDescription	0E01	0200	0E000000	92000000
	0016	Make	0F01	0200	09000000	A0000000
	0022	Model	1001	0200	08000000	AA000000
	002E	Orientation	1201	0300	01000000	01000000
	003A	XResolution	1A01	0500	01000000	B2000000
	0046	YResolution	1B01	0500	01000000	BA000000
	0052	ResolutionUnit	2801	0300	01000000	02000000
	005E	DateTime	3201	0200	14000000	C2000000
	006A	YCbCrPositioning	1302	0300	01000000	02000000
	0076	CopyRight	9882	0200	15000000	D6000000
	0082	Exif IFD Pointer	6987	0400	01000000	EC000000
	Offset (Hex)	**Name**	**Offset (Hex)**			
	008E	Next IFD Offset	C402			
Value longer than 4byte of 0th IFD	**Offset (Hex)**	**Name**	**Data (Hex or "ASCII")**			
	0092	ImageDescription Value	"Exif_JPEG_422"00			
	00A0	Make Value	"DSCompany"00			
	00AA	Model Value	"Example"00			
	00B2	XResolution Value	4800000001000000			
	00BA	YResolution Value	4800000001000000			
	00C2	DateTime Value	"1997:09:01 12:00:00"00			
	00D6	Copyright Value (Last Byte is Padded)	"Copyright,ABCDE,1997"0000			
Exif IFD	**Offset (Hex)**	**Name**	**Interoperability Number (Hex)**			
	00EC	Exif IFD Number	1900			
	Offset (Hex)	**Name**	**Tag ID (Hex)**	**Type (Hex)**	**Count (Hex)**	**ValueOffset (Hex or "ASCII")**
	00EE	ExposureTime	9A82	0500	01000000	1E020000
	00FA	FNumber	9D82	0500	01000000	26020000
	0106	ExifVersion	0090	0700	04000000	"0200"
	0112	DateTimeOriginal	0390	0200	14000000	2E020000
	011E	DateTimeDigitized	0490	0200	14000000	42020000
	012A	ComponentsConfiguration	0191	0700	04000000	01020000
	0136	CompressedBitsPerPixel	0292	0500	01000000	56020000
	0142	ShutterSpeedValue	0192	0A00	01000000	5E020000
	014E	ApertureValue	0292	0500	01000000	66020000
	015A	BrightnessValue	0392	0A00	01000000	6E020000
	0166	ExposureBiasValue	0492	0A00	01000000	76020000
	0172	MaxApertureRatioValue	0592	0500	01000000	7E020000
	017E	SubjectDistance	0692	0500	01000000	86020000
	018A	MeteringMode	0792	0300	01000000	01000000

	0196	LightSource	0892	0300	01000000	01000000
	01A2	Flash	0992	0300	01000000	00000000
	01AE	FocalLength	0A92	0500	01000000	8E020000
	01BA	UserComments	8692	0700	2E000000	96020000
	01C6	SubSecTime	9092	0200	04000000	"000"00
	01D2	SubSecTimeOriginal	9192	0200	04000000	"000"00
	01DE	SubSecTimeDigitized	9292	0200	04000000	"000"00
	01EA	FlashPixVersion	A000	0700	04000000	"0100"
	01F6	Colorspace	A001	0300	01000000	01000000
	0202	Pixel X Dimension	A002	0400	01000000	80020000
	020E	Pixel Y Dimension	A003	0400	01000000	E0010000
	Offset (Hex)	**Name**			**Offset (Hex)**	
	021A	Next IFD Offset			00000000	
Value longer than 4 Bytes of Exif IFD	**Offset (Hex)**	**Name**			**Data (Hex or "ASCII")**	
	021E	ExposureTime Value			010000003C000000	
	0226	FNumber Value			0400000001000000	
	022E	DateTimeOriginal Value			"1997:09:01 12:00:00"00	
	0242	DateTimeDigitized Value			"1997:09:01 12:00:00"00	
	0256	CompressedBitsPerPixel Value			0200000001000000	
	025E	ShutterSpeedValue Value			0600000001000000	
	0266	ApertureValue Value			0400000001000000	
	026E	BrightnessValue Value			0000000001000000	
	0276	ExposureBiasValue Value			0000000001000000	
	027E	MaxApertureRatioValue Value			0100000001000000	
	0286	SubjectDistance Value			0F0000000A000000	
	028E	FocalLength Value			3200000001000000	
	0296	UserComment Value (46 Bytes)			4A49530000000000....	
1st IFD	**Offset (Hex)**	**Name**			**Interoperability Number (Hex)**	
	02C4	Number Of Interoperability			0700	
	Offset (Hex)	**Name**	**Tag ID (Hex)**	**Type (Hex)**	**Count (Hex)**	**ValueOffset (Hex or "ASCII")**
	02C6	Compression	0301	0300	01000000	01000000
	02D2	XResolution	1A01	0500	01000000	1E030000
	02DE	YResolution	1B01	0500	01000000	26030000
	02EA	ResolutionUnit	2801	0300	01000000	02000000
	02F6	JPEGInterchangeFormat	0102	0400	01000000	2D0E0000
	0302	JPEGInterchangeFormatLength	0202	0400	01000000	FF0A0000
	030E	YCbCrPositioning	1302	0300	01000000	02000000
	Offset (Hex)	**Name**			**Offset (Hex)**	
	031A	Next IFD Offset			00000000	
Value longer than 4byte of 1st IFD	**Offset (Hex)**	**Data (Hex or "ASCII")**			**Name**	
	031E	4800000001000000			XResolution Value	
	0326	4800000001000000			YResolution Value	
Thumbnail Image Data	**Offset (Hex)**	**Name**			**Data**	
	032E	Thumbnail Data			(JPEG Stream)	

A.4 JPEG Compressed (4:2:0) File

Table 40 JPEG Compressed (4:2:0) File Description Sample Contents

Primary Image	
Recording Format	JPEG
Subsampling	YCC 4:2:0
Restart Markers	Inserted
Quantization Tables	2
Pixels	620 (W) x 475 (H)
Image Title	620x475
SOF Recorded Pixels	640x475
DCT Data	640x480
Image Title	Exif_JPEG_420
Image Input Equipment Manufacturer	DSCompany
Image Input Equipment Model Name	Example
Orientation	Normal
Image Resolution	72 dpi (Width), 72 dpi (Length)
File Change Date and Time	1997:09:01 12:00:00
Copyright	Copyright, ABCDE,1997
Exif-specific Information	
Version	Ver. 2.0
Date and Time of Original Image Creation	1997:09:01 12:00:00
Date and Time of File Creation	1997:09:01 12:00:00
Components	Y,Cb,Cr
Image Compression Mode	2bit/pel
Shutter Speed	59/10 (equivalent to 1/60 sec.)
Aperture	50/10 (equivalent to F:5.6)
Brightness	80/10
Exposure Bias	0/0
Maximum Lens Aperture	200/10
Subject Distance	20/10
Metering Mode	MultiSpot
Light Source	Daylight
Flash ON/OFF	ON
Thumbnails	
Recording Format	TIFF
Subsampling	YCC 4:2:0
Pixels	80x60
Image Resolution	72 dpi (Width), 72 dpi (Length)

Table 41 JPEG Compressed (4:2:0) File JPEG Stream Description Sample

Offset (Hex)	Maker Segment	Name	Code (Hex)	Comment
0000	SOI	SOI Marker	FFD8	Start of Image
0002	APP1	APP1 Marker	FFE1	
0004		APP1 Length	1FBC	
0006		Identifier	"Exif"00	
000B		Pad	00	
000C		APP1 Body		See Next Table
1FC0	DQT	DQT Marker	FFDB	Define Quantization Table
1FC2		DQT Length	0084	
1FC4		Pq, Tq	00	
1FC5		table elements	08060607....	64 Bytes of Data
2005		Pq,Tq	01	
2006		table elements	0909090C....	64 Bytes of Data
2046	DHT	DHT Marker	FFC4	
2048		DHT Length	01A2	
204A		Th	00	Table 0 for DC
204B		Li	00010501....	
205B		Vij	00010203....	
2067		Th	10	Table 0 for AC
2068		Li	00020103....	
2078		Vij	01020300....	
211A		Th	01	Table 1 for DC
211B		Li	00030101....	
212B		Vij	00010203....	
2137		Th	11	Table 1 for AC
2138		Li	00020102....	
2148		Vij	00010203....	
21EA	DRI	DR Marker	FFDD	
21EC		DRI Length	0004	
21EE		Ri	0004	
21F0	SOF0	SOF0 Marker	FFC0	
21F2		SOF0 Lentth	0011	
21F4		P	08	
21F5		Y	01DB	
21F7		X	0280	
21F9		Nf	03	
21FA		C1	01	
21FB		H1,V1	22	
21FC		Tq1	00	
21FD		C2	02	
21FE		H2,V2	11	
21FF		Tq2	01	
2200		C3	03	
2201		H3,V3	11	
2202		Tq3	01	
2203	SOS	SOS Marker	FFDA	
2205		SOS Length	000C	
2207		Ns	03	
2208		Cs1	01	
2209		Td1,Ta1	00	
220A		Cs2	02	

220B		Td2,Ta2	11	
220C		Cs3	03	
220D		Td3,Ta3	11	
220E		Ss	00	
220F		Se	3F	
2210		Ah,Al	00	
2211	Image Data		F9FE....	Compressed Data
13BA4	EOI		FFD9	

Table 42 JPEG Compressed (4:2:0) File APP1 Description Sample

Header	**Offset (Hex)**	**Name**	**Data (Hex or "ASCII")**			
	0000	Byte Order	4D4D ("II")			
	0002	42	2A00			
	0004	0th IFD Offset	08000000			
	Offset (Hex)	**Name**	**Interoperability Number (Hex)**			
	0008	Number of Interoperability	0B00			
0th IFD	**Offset (Hex)**	**Name**	**Tag ID (Hex)**	**Type (Hex)**	**Count (Hex)**	**ValueOffset (Hex or "ASCII")**
	000A	ImageDescription	0E01	0200	0E000000	92000000
	0016	Make	0F01	0200	09000000	A0000000
	0022	Model	1001	0200	08000000	AA000000
	002E	Orientation	1201	0300	01000000	01000000
	003A	XResolution	1A01	0500	01000000	B2000000
	0046	YResolution	1B01	0500	01000000	BA000000
	0052	ResolutionUnit	2801	0300	01000000	02000000
	005E	DateTime	3201	0200	14000000	C2000000
	006A	YCbCrPositioning	1302	0300	01000000	02000000
	0076	Copyright	9882	0200	15000000	D6000000
	0082	Exif IFD Pointer	6987	0400	01000000	EC000000
	Offset (Hex)	**Name**	**Offset (Hex)**			
	008E	Next IFD Offset	C402			
Value longer than 4byte of 0th IFD	**Offset (Hex)**	**Name**	**Data (Hex or "ASCII")**			
	0092	ImageDescription Value	"Exif_JPEG_420"00			
	00A0	Make Value	"DSCompany"00			
	00AA	Model Value	"Example"00			
	00B2	XResolution Value	4800000001000000			
	00BA	YResolution Value	4800000001000000			
	00C2	DateTime Value	"1997:09:01 12:00:00"00			
	00D6	Copyright Value (Last Byte is Padded)	"Copyright,ABCDE,1997"0000			
Exif IFD	**Offset (Hex)**	**Name**	**Interoperability Number (Hex)**			
	00EC	Exif IFD Number	1900			
	Offset (Hex)	**Name**	**Tag ID (Hex)**	**Type (Hex)**	**Count (Hex)**	**ValueOffset (Hex or "ASCII")**
	00EE	ExposureTime	9A82	0500	01000000	1E020000
	00FA	FNumber	9D82	0500	01000000	26020000
	0106	ExifVersion	0090	0700	04000000	"0200"
	0112	DateTimeOriginal	0390	0200	14000000	2E020000
	011E	DateTimeDigitized	0490	0200	14000000	42020000
	012A	ComponentsConfiguration	0191	0700	04000000	01020300
	0136	CompressedBitsPerPixel	0292	0500	01000000	56020000
	0142	ShutterSpeedValue	0192	0A00	01000000	5E020000
	014E	ApertureValue	0292	0500	01000000	66020000
	015A	BrightnessValue	0392	0A00	01000000	6E020000
	0166	ExposureBiasValue	0492	0A00	01000000	76020000
	0172	MaxApertureRatioValue	0592	0500	01000000	7E020000
	017E	SubjectDistance	0692	0500	01000000	86020000
	018A	MeteringMode	0792	0300	01000000	01000000

	0196	LightSource	0892	0300	01000000	01000000
	01A2	Flash	0992	0300	01000000	00000000
	01AE	FocalLength	0A92	0500	01000000	8E020000
	01BA	UserComments	8692	0700	2E000000	96020000
	01C6	SubSecTime	9092	0200	04000000	30303000
	01D2	SubSecTimeOriginal	9192	0200	04000000	"000"00
	01DE	SubSecTimeDigitized	9292	0200	04000000	"000"00
	01EA	FlashPixVersion	A000	0700	04000000	"0100"
	01F6	ColorSpace	A001	0300	01000000	01000000
	0202	Pixel X Dimension	A002	0400	01000000	6C020000
	020E	Pixel Y Dimension	A003	0400	01000000	DB010000
	Offset (Hex)	**Name**	**Offset (Hex)**			
	021A	Next IFD Offset	00000000			
Value longer than 4 Bytes of Exif IFD	**Offset (Hex)**	**Name**	**Data (Hex or "ASCII")**			
	021E	ExposureTime Value	010000003C000000			
	0226	FNumber Value	0400000001000000			
	022E	DateTimeOriginal Value	"1997:09:01 12:00:00"00			
	0242	DateTimeDigitized Value	"1997:09:01 12:00:00"00			
	0256	CompressedBitsPerPixel Value	0200000001000000			
	025E	ShutterSpeedValue Value	0600000001000000			
	0266	ApertureValue Value	0400000001000000			
	026E	BrightnessValue Value	0000000001000000			
	0276	ExposureBiasValue Value	0000000001000000			
	027E	MaxApertureRatioValue Value	0100000001000000			
	0286	SubjectDistance Value	0F0000000A000000			
	028E	FocalLength Value	3200000001000000			
	0296	UserComment Value (46 Bytes)	4A49530000000000....			
1st IFD	**Offset (Hex)**	**Name**	**Interoperability Number (Hex)**			
	02C4	Number Of Interoperability	0F00			
	Offset (Hex)	**Name**	**Tag ID (Hex)**	**Type (Hex)**	**Count (Hex)**	**ValueOffset (Hex or "ASCII")**
	02C6	ImageWidth	0001	0400	01000000	50000000
	02D2	ImageLength	0101	0400	01000000	3C000000
	02DE	BitsPerSample	0201	0300	03000000	7E030000
	02EA	Compression	0301	0300	01000000	01000000
	02F6	PhotometricInterpretation	0601	0300	01000000	06000000
	0302	StripOffsets	1101	0400	01000000	94030000
	030E	SamplesPerPixel	1501	0300	01000000	03000000
	031A	RowsPerStrip	1601	0400	01000000	3C000000
	0326	StripByteCounts	1701	0400	01000000	201C0000
	0332	XResolution	1A01	0500	01000000	84030000
	033E	YResolution	1B01	0500	01000000	8C030000
	034A	PlanarConfiguration	1C01	0300	01000000	01000000
	0356	ResolutionUnit	2801	0300	01000000	02000000
	0362	YCbCrSubSampling	1202	0300	02000000	02000200
	036E	YCbCrPositioning	1302	0300	01000000	02000000
	Offset (Hex)	**Name**	**Offset (Hex)**			
	037A	Next IFD Offset	00000000			
Value longer than	**Offset (Hex)**	**Name**	**Data (Hex or "ASCII")**			

4byte of 1st IFD	037E	BitsPerSample Value	080008000800
	0384	XResolution Value	4800000001000000
	038C	YResolution Value	4800000001000000
Thumbnail Image Data	**Offset (Hex)**	**Name**	**Data (Hex or "ASCII")**
	0394	Thumbnail Image Data Strip	:

Appendix B Audio File Description Examples

B.1 PCM Audio Data

Table 43 PCM Audio File Description Sample Contents

Audio Data	
Format Type	PCM Format
Channels	monaural
Sampling Frequency	22.05 kHz
Bits per Sample	8 Bits/Sample
Total Samples	27768 Samples
Attribute Information	
Audio Title	ExifPCMExampleZ
Audio Genre	None
Recording Date	1997-07-13
Recording Engineer	Taro Yamada
Copyright	Copyright Exif Corporation on 1997.
Exif-specific Information	
Exif Version	0200 (Version 2.0)
Related Exif Image File	DSC00001.JPGZ
Recording Start Time	10:15:30.130Z
Recording Equipment Manufacturer	DSC CorporationZ
Recording Equipment Model	DSC1000Z
Manufacturer Note	None
User Comment	None

Table 44 PCM Audio File Description Example

	Offset (Hex)	Name	Comment	Data (Hex or "ASCII")
RIFF-ck	0000	ckID	RIFF	52494646
	0004	ckSize		766D0000
	0008	formType	WAVE	57415645
fmt-ck	000C	ckID	fmt_	666D7420
	0010	ckSize		10000000
	0014	wFormatTag	PCM Format	0100
	0016	nchannels	monaural	0100
	0018	nSamplesPerSec	22.05 kHz	22560000
	001C	nAvgBytesPerSec	22050 bytes/sec	22560000
	0020	nBlockAlign	1 byte/block	0100
	0022	wBitsPerSample	8 bits/sample	0800
INFO-LIST	0024	ckID	LIST	4C495354
	0028	ckSize		6E000000
	002C	listType	"INFO"	494E464F
INAM-ck	0030	ckID	INAM	494E414D
	0034	ckSize		0F000000
	0038	ckData	(audio title)	"ExifPCMExample"0000
ICRD-ck	0048	ckID	ICRD	49435244
	004C	ckSize		0B000000
	0050	ckData	(July 13, 1997)	"1997-07-13"0000
IART-ck	005C	ckID	IART	49415254
	0060	ckSize		0C000000
	0064	ckData	(creator)	"Taro Yamada"00
ICOP-ck	0070	ckID	ICOP	49434F50
	0074	ckSize		21000000
	0078	ckData	(copyright)	"Copyright Exif Corporation on 1997."0000
exif-LIST	009A	ckID	LIST	4C495354
	009E	ckSize		64000000
	00A2	listType	exif	65786966
ever-ck	00A6	ckID	ever	65766572
	00AA	ckSize		4000000
	00AE	ckData	Ver. 2.0	200
erel-ck	00B2	ckID	erel	6572656C
	00B6	ckSize		0D000000
	00BA	ckData	(relation to Exif image file)	"DSC00001.JPG"0000
etim-ck	00C8	ckID	etim	6574696D
	00CC	ckSize		0D000000
	00D0	ckData	(10:15:30.130)	"10:15:30.130"0000
ecor-ck	00DE	ckID	ecor	65636F72
	00E2	ckSize		10000000
	00E6	ckSize	(equipment manufacturer)	"DSC Corporation"00
emdl-ck	00F6	ckID	emdl	656D646C
	00FA	ckSize		8000000
	00FE	ckData	(equipment model)	"DSC1000"00
data-ck	0106	ckID	data	64617461
	010A	ckSize		706C0000
	010E	ckData	PCM Audio Data	00000000000.....

(Total samples = 27768)

B.2 μ-Law Audio Data

Table 45 μ-Law Audio File Description Sample Contents

Audio Data	
Format Type	μ-LAW PCM
Channels	monaural
Sampling Frequency	8.000 kHz
Bits per Sample	8 bits
Total Samples	111912
Attribute Information	
Audio Title	μ-LAW PCM ExampleZ
Audio Genre	GreetingZ
Recording Date	1997-07-17
Recording Engineer	Interoperability Multimedia AssociationZ
Copyright	Copyright ABCZ
Exif-specific Information	
Exif Version	0200 (Version 2.0)
Related Exif Image File	DSC00001.JPGZ
Recording Start Time	10:20:30.130Z
Recording Equipment Manufacturer	ABCD CorporationZ
Recording Equipment Model	Camera XYZZ
Manufacturer Note	0000000000000000
User Comment	User Comment (ASCII)

Table 46 μ-Law Audio File Description Sample

	Offset (Hex)	Name	Comment	Data (Hex or "ASCII")
RIFF-ck	0000	ckID	RIFF	52494646
	0004	ckSize		AAB60100
	0008	formType	WAVE	57415645
fmt-ck	000C	ckID	fmt_	666D7420
	0010	ckSize		12000000
	0014	wFormatTag	μ-Law Format	0700
	0016	nchannels	monaural	0100
	0018	nSamplesPerSec	8.00 kHz	401F0000
	001C	nAvgBytesPerSec	8.00Kbytes/sec	401F0000
	0020	nBlockAlign	1 byte/block	0100
	0022	wBitsPerSample	8 bits/sample	0800
	0024	cbSize	0	0000
fact-ck	0026	ckID	fact	66616374
	002A	ckSize		04000000
	002E	dwSampleLength		28B50100
INFO-LIST	0032	ckID	LIST	4C495354
	0036	ckSize		AC000000
	003A	listType	INFO	494E464F
INAM-ck	003E	ckID	INAM	494E414D
	0042	ckSize		12000000
	0046	ckData	(audio title)	"uLAW PCM Example"00
IGNR-ck	0058	ckID	IGNR	49474E52
	005C	ckSize		09000000
	0060	ckData	(recording genre)	"Greeting"Z
ICRD-ck	006A	ckID	ICRD	49435244
	006E	ckSize		0B000000
	0072	ckData	(July 17, 1997)	"1997-07-17"00
ICMT-ck	007E	ckID	ICMT	49434D54
	0082	ckSize		18000000
	0086	ckData	(This File μ-LAW Sample)	"This File uLAW Sample"000000
IART-ck	009E	ckID	IART	49415254
	00A2	ckSize		23000000
	00A6	ckData	(creator)	"Interoperability Multimedia Association"00
ICOP-ck	00CA	ckID	ICOP	49434F50
	00CE	ckSize		10000000
	00D2	ckData	(creator)	"ABCD Corporation"00
exif-LIST	00E2	ckID	LIST	4C495354
	00E6	ckSize		94000000
	00EA	listType	exif	65786966
ever-ck	00EE	ckID	ever	4C495354
	00F2	ckSize		94000000
	00F6	ckData	Ver. 2.0	65786966
erel-ck	00FA	ckID	erel	4C495354
	00FE	ckSize		94000000
	0102	ckData	(relation to Exif image file)	"DSC00001.JPG"00
etim-ck	0110	ckID	etim	4C495354
	0114	ckSize		94000000
	0118	ckData	(10:20:30.130)	"10:20:30.130"00
ecor-ck	0126	ckID	ecor	4C495354
	012A	ckSize		94000000

		012E	ckSize	(equipment manufacturer)	"ABCD Corporation"00
	emdl-ck	0140	ckID	emdl	656D646C
		0144	ckSize		0A000000
		0148	ckData	(equipment model)	"Camera XY"0000
	emnt-ck	0152	ckID	emnt	656D6E74
		0156	ckSize		08000000
		015A	ckData	(manufacturer note)	0000000000000000
	eucm-ck	0162	ckID	eucm	6575636D
		0166	ckSize		14000000
		016A	ckData	(user comment)	415343494900000055736572204 36F6D
data-ck		017E	ckID	data	64617461
		0182	ckSize		28B50100
		0186	ckData	µ-Law Audio Data	F2FE00007FFF0000E3.....

(Total samples = 111912)

B.3 IMA-ADPCM Audio Data

Table 47 IMA-ADPCM Audio File Description Sample Contents

Audio Data	
Format Type	IMA-ADPCM Format
Channels	stereo
Sampling Frequency	8.000 kHz
Bytes per Block	8110 bytes/sec
Bits per Sample	4 bits/sample
Total Data Bytes	35840 bytes
Attribute Information	
Audio Title	IMA-ADPCM ExampleZ
Audio Genre	None
Recording Date	1997-08-11Z
Comment	None
Recording Engineer	Hanako YamadaZ
Copyright	Copyright XYZ on 1997.Z
Exif-specific Information	
Exif Version	0200 (Version 2.0)
Related Exif Image File	DSC00001.JPGZ
Recording Start Time	15:14:13.135Z
Recording Equipment Manufacturer	DSC Interoperability CorporationZ
Recording Equipment Model	DSC Camera-2Z
Manufacturer Note	None
User Comment	None

Table 48 IMA-ADPCM Audio File Description Example

	Offset (Hex)	Name	Comment	Data (Hex or "ASCII")
RIFF-ck	0000	ckID	RIFF	52494646
	0004	ckSize		248D0000
	0008	formType	WAVE	57415645
fmt-ck	000C	ckID	"fmt_"	666D7420
	0010	ckSize	IMA-ADPCM Format	14000000
	0014	wFormatTag		1100
	0016	nchannels	stereo	0200
	0018	nSamplesPerSec	8.0kHz	401F0000
	001C	nAvgBytesPerSec	8110 bytes/sec	AE1F0000
	0020	nBlockAlign	512 bytes/block	0002
	0022	wBitsPerSample	4 bits/sample	0400
	0024	cbSize	Additional bytes = 2	0200
	0026	wSamplesPerBlock	505 bytes/block	F901
fact-ck	0028	ckID	fact	66616374
	002C	ckSize		04000000
	0030	dwSampleLength	35350 samples	168A0000
INFO-LIST	0034	ckID	LIST	4C495354
	0038	ckSize		68000000
	003C	listType	INFO	494E464F
INAM-ck	0040	ckID	INAM	494E414D
	0044	ckSize		12000000
	0048	ckData	(audio title)	"IMA-ADPCM Example"00
IGNR-ck	0058	ckID	IGNR	49474E52
	005C	ckSize		09000000
	0060	ckData	(recording genre)	"Greeting"Z
ICRD-ck	005A	ckID	ICRD	49435244
	005E	ckSize		0B000000
	0062	ckData	(August 11, 1997)	"1997-08-11"0000
IART-ck	006E	ckID	IART	49415254
	0072	ckSize		0E000000
	0076	ckData	(creator)	"Hanako Yamada"00
ICOP-ck	0084	ckID	ICOP	49434F50
	0088	ckSize		17000000
	008C	ckData	(copyright)	"Copyright XYZ on 1997."0000
exif-LIST	00E2	ckID	LIST	4C495354
	00E6	ckSize		94000000
	00EA	listType	exif	65786966
ever-ck	00A4	ckID	LIST	4C495354
	00A8	ckSize		78000000
	00AC	listType	exif	65786966
erel-ck	00BC	ckID	erel	6572656C
	00C0	ckSize		0D000000
	00C4	ckData	(relation to Exif image file)	"DSC00001.JPG"0000
etim-ck	00D2	ckID	etim	6574696D
	00D6	ckSize		0D000000
	00DA	ckData	(15:14:13.135)	"15:14:13.135"0000
ecor-ck	00E8	ckID	ecor	65636F72
	00EC	ckSize		1E000000
	00F0	ckSize	(equipment manufacturer)	"DSC Interoperability Corporation"00
emdl-ck	010E	ckID	emdl	656D646C

	0112 0116	ckSize ckData	(equipment model)	0D000000 "DSC Camera-2"0000
data-ck	0124 0128 012C	ckID ckSize ckData	data	64617461 008C0000 .....

(Total bytes = 35840)

Appendix C APEX Units

The camera information in this standard conforms to the APEX (Additive System of Photographic Exposure) unit system. APEX is a convenient unit for expressing exposure (Ev). The relation of APEX to other units is essentially as follows.

- ApertureValue (Av) = 2 $\log_2$ (F number)
- ShutterSpeedValue (Tv) = - $\log_2$ (exposure time)
- BrightnessValue (Bv) = $\log_2$ (B/NK) Note that: B:cd/cm^2, N,K: constant

Film sensitivity (not used in this standard) is expressed as follows.

- Film sensitivity (Sv) = $\log_2$ (ASA / 3.125)

Using these values, exposure (Ev) is calculated as follows.

- Ev = Av + Tv = Bv + Sv

The table below gives examples of values actually used as camera information.

Table 49 Typical APEX Values

ApertureValue (APEX)	F-Number
0	1
1	1.4
2	2
3	2.8
4	4
5	5.6
6	8
7	11
8	16
9	22
10	32

ShutterSpeed Value (APEX)	ExposureTime (second)
-5	30
-4	15
-3	8
-2	4
-1	2
0	1
1	1/2
2	1/4
3	1/8
4	1/15
5	1/30
6	1/60
7	1/125
8	1/250
9	1/500
10	1/1000
11	1/2000

BrightnessValue (APEX)	foot lambert
-2	1/4
-1	1/2
0	1
1	2
2	4
3	8
4	15
5	30

Appendix D Recommended Implementation Examples

The purpose of this chapter is not to restrict Exif implementations, but to show examples of recommended practices that will increase the level of compatibility among DSC cameras and related systems using general-purpose removable media such as PC Card or Smart Media.

The practices illustrated below are recommended for DSC and other embedded systems when the processing capacity for handling the recording media is limited.

D.1 Recommended Directory Name Usage Examples

Writers

Create a subdirectory "IMxxxxxx" Interoperability the root directory, and record the Exif file there. The "xxxxxx" part of the name consists of no more than 6 alphanumerics and cannot contain special characters. "IM" are upper case. Hereafter this is called the Exif directory.

D.2 Recommended File Naming Usage Examples

Readers

An Exif reader plays the files in the Exif directory noted in D.1 above, treating those with the extension "JPG" as Exif compressed files, those with the extension "TIF" as Exif uncompressed files, and those with the extension "WAV" as audio files. On this basis it confirms the mandatory tags or chunk data in the file and plays it as appropriate. No specification is made regarding the handling of files with extensions other than the above.

D.3 Recommended File Operation Usage Examples

Exif compressed files, uncompressed files and audio files can be recorded in the same Exif directory. It is also possible to create two or more Exif directories Interoperability the root directory, so long as the stipulations for "IMxxxxxx" (in D.1 above) are observed. A specific usage case is given below.

Usage case

If the recording medium already has an Exif directory (e.g., IMXYZ) recorded by a different model, separate from the self-recorded Exif directory (e.g., IMFIDX10), then a self-recorded Exif directory (IMFIDX10) can be created

Interoperability the root directory and used to record Exif files.

In this case the existing Exif directory (IMXYZ) continues to be preserved on the medium (see Fig. 50).

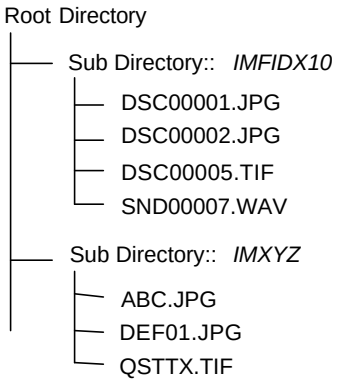

Fig. 50 Directory Structure and File Recording Example

Readers

The reader recognizes an Exif directory "IMxxxxxx" in the root directory (a subdirectory with "IM" as the first two letters of its name) and files in it that meet the naming conventions in section 2.8.3 and section 3.7.1, and plays the file if the contents of the mandatory tags or chunks match the equipment specifications.

When there are multiple Exif directories "IMxxxxxx" Interoperability the root directory, it must be possible to recognize the files recorded in those directories.

D.4 Interoperability "Recommended Exif Interoperability Rules" (ExifR98)

ExifR98 is established as detailed rules recommended by this specification to ensure the more playback Interoperability among the devices using this specification. In ExifR98 naming rules of directories and files to store images are defined more concretely in conformance with this specification and the thumbnail format and covering range of playback is defined according to the function of devices.

Separate Volume Recommended Exif Interoperability Rules Version 1.0

Appendix E Color Space Guidelines

These guidelines are given with reference to sRGB[xviii], ITU-R BT.709[xix], and ITU-R BT.601[xx]. For details see the documents themselves.

E.1 sRGB

The sRGB standard gives strict color space definitions based on standard monitor characteristics and viewing conditions (details are Interoperability deliberation in IEC/TC 100 PT 61966). This standard takes the characteristics of typical commercially available displays as its median reference values.

ITU-R BT.709 is a standard specification for cameras, which specifies algorithms for photographing a scene and displaying it on a standard monitor. It does not, however, give a clear specification of the standard monitor characteristics. Accordingly, sRGB can be thought of as a standard that augments and is compatible with ITU-R BT.709.

In actual camera design, the ITU-R BT.709 characteristics can be used as the picture-taking algorithms, presupposing the standard monitor characteristics and viewing conditions given in sRGB, in order to generate images with a standard color space.

E.2 Tone Reproduction (Brightness and Contrast)

Scene reflectance can be nonlinearly converted based on ITU-R BT.709, and recorded using 8-bit quantization.

The ITU-R BT.709 transfer characteristics are as follows.

(1) When R, G, B equal or lager than 0.018

$R' = 1.099R^{0.45}-0.099$

$G' = 1.099G^{0.45}-0.099$

$B' = 1.099B^{0.45}-0.099$

(2) When R, G, B less than 0.018

$R' = 4.5R$

$G' = 4.5G$

$B' = 4.5B$

After this conversion takes place, the data are enlarged by a factor of 255 and recorded using 8-bit quantization.

E.3 Luminance/Chrominance and RGB Transformation

Calculation of R, G, B from luminance Y and chrominance Cb and Cr takes place as follows based on ITU-R BT.601.

$$Y = 0.299R + 0.587G + 0.114B$$

$$Cb = (-0.299R - 0.587G + 0.886B) * 0.564 + offset$$

$$Cr = (0.701R - 0.587G - 0.114B) * 0.713 + offset$$

Appendix F Notes on Conversion to FlashPix

The data recording method in this standard makes it possible to convert from Exif to FlashPix format with no loss of image quality, and retaining all attribute information. A file that is thus designed from the start for conversion to FlashPix is called a FlashPix-Ready (FPXR) file.

There are three main FlashPix-Ready functions:

- All Exif tag information is mapped to the FlashPix Image Info Property Set,
- APP2 extended data can be converted to FlashPix extensions,
- JPEG images can be converted to the FlashPix tile structure without image quality loss, making use of restart markers.

Fig. 51 illustrates the conversion process.

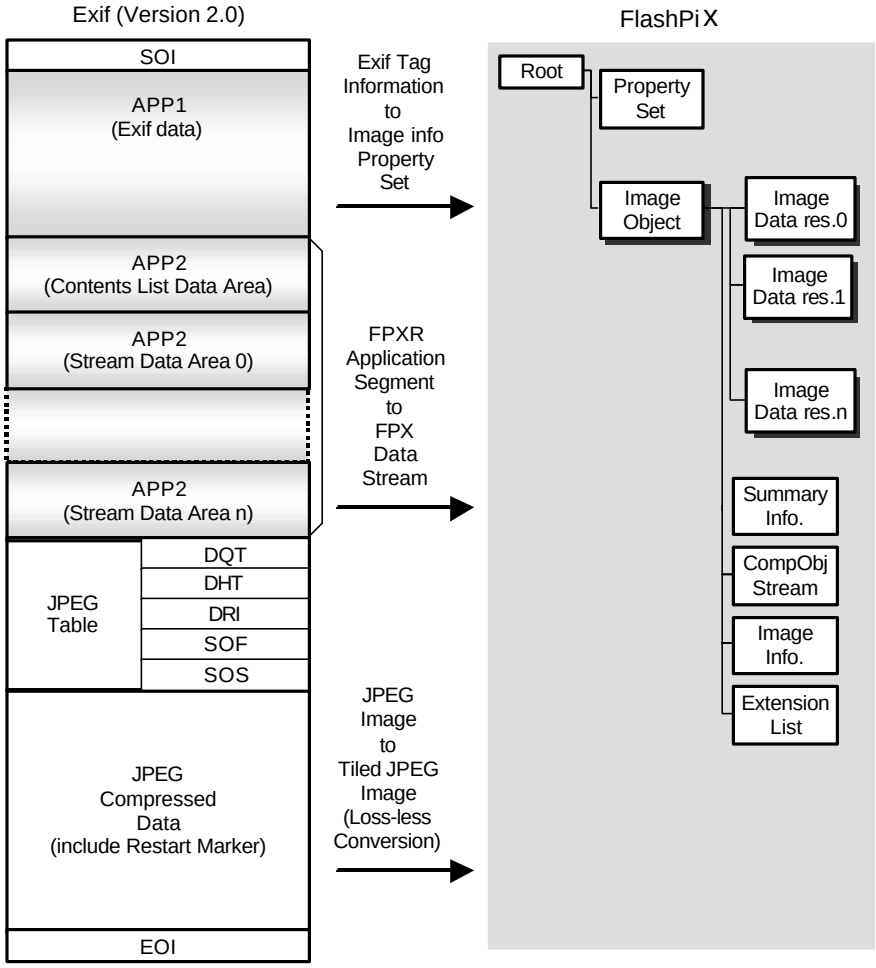

Fig. 51 Conversion from Exif to FlashPix

F.1 Converting Image Data

FlashPix compressed image data consists of JPEG-compressed 64 x 64-pixel tiles. Converting JPEG images without restart markers to FlashPix images requires that the JPEG data be expanded and re-compressed, which can lead to image quality loss. By inserting restart markers at 64-pixel Interoperability, FlashPix images of the maximum resolution can be generated simply by rearranging the JPEG-compressed data.

Fig. 52 shows how compressed data is rearranged using restart markers.

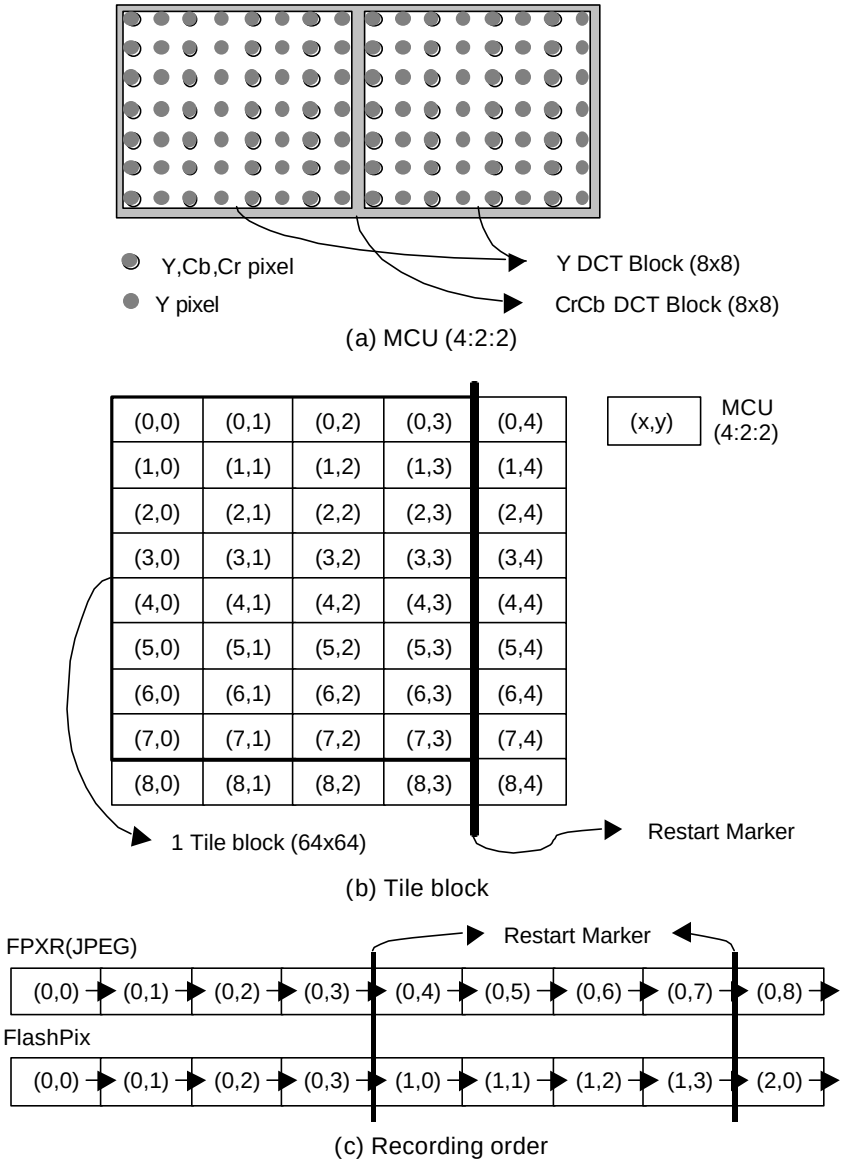

Fig. 52 Conversion to FlashPix Using Restart Markers

Recording of restart markers is optional, and conversion to FlashPix is possible without them; but conversion without restart markers may result in some image quality loss and require a longer processing time.

In order for restart markers to be inserted at 64-pixel Interoperability, the image data width must be an exact multiple of 64. Therefore the valid image width is recorded as tag information (*PixelXDimension*), and the JPEG compressed data is recorded with the valid image padded to the right to make it an exact multiple of 64 (see section 2.8.1).

As in the FlashPix standard, padding is used where necessary to achieve exact multiples of 64; and when converting to FlashPix, the padding data on the right can be treated in the same way as valid image data.

If the image height is not an exact multiple of 64, Exif files are not padded; so when converting to FlashPix it is necessary to pad the bottom edge of the image.

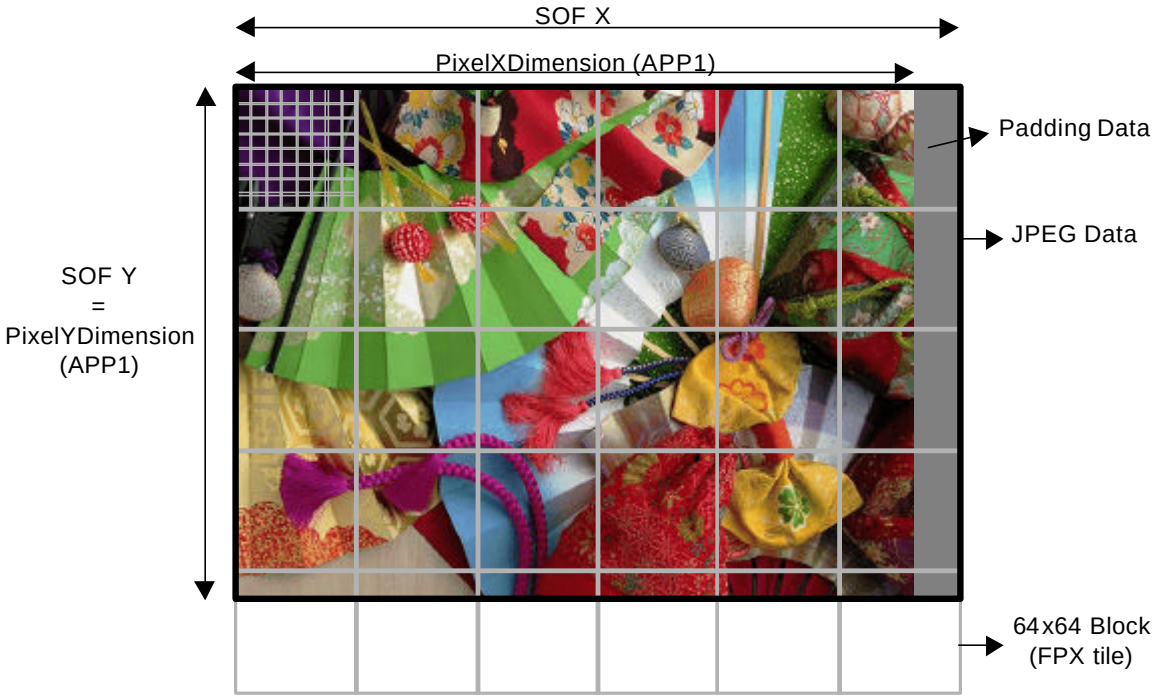

Fig. 53 Image Size Restrictions

F.2 Converting Tag Data

When Exif attribute information is converted to FlashPix, a one-to-one conversion can be made to the Property Set used to record FlashPix attributes. The rules for converting from each kind of Exif tag to the FlashPix PropertySet are given in the tables below (conversion of GPS Info tags is to be determined later).

Table 50 Conversion between Exif Tags and FlashPix Property Set (1) (TIFF Tags)

Exif			FPX		
Field Name	Tag Code		Property Set	Group	Name
	Dec	Hex			
ImageWidth	256	100	-	-	-
ImageLength	257	101	-	-	-
BitsPerSample	258	102	-	-	-
Compression	259	103	-	-	-
PhotometricInterpretation	262	106	-	-	-
ImageDescription	270	10E	Image Info	Content Description	Caption text
Make	271	10F	Image Info	Camera Information	Camera manufacturer name
Model	272	110	Image Info	Camera Information	Camera model name
StripOffsets	273	111	-	-	-
Orientation	274	112	Transform	-	Spatial Orientation
SamplesPerPixel	277	115	-	-	-
RowsPerStrip	278	116	-	-	-
StripByteCounts	279	117	-	-	-
XResolution	282	11A	Image Contents	Primary description	Default display width
YResolution	283	11B	Image Contents	Primary description	Default display height
PlanarConfiguration	284	11C	-	-	-
ResolutionUnit	296	128	Image Contents	Primary description	Display height/width units
TransferFunction	301	12D	-	-	-
Software	305	131	Image Info	File source	Software Name
DateTime	306	132	Ignore	Ignore	Ignore
Artist	306	13B	Image Info	Intellectual Property	Authorship
WhitePoint	318	13E	-	-	-
PrimaryChromaticities	319	13F	-	-	-
YCbCrCoefficients	529	211	-	-	-
YCbCrSubSampling	530	212	-	-	-
YCbCrPositioning	531	213	Ignore	Ignore	Ignore
ReferenceBlackWhite	532	214	-	-	-
Copyright	33432	8298	Image Info	Intellectual Property	Copyright message
Exif IFD Pointer	34665	8769	-	-	-
GPS Info IFD Pointer	34853	8825	-	-	-

Table 51 Conversion between Exif Tags and FlashPix Property Set (2) (Exif Private Tags)

Exif			FPX		
Field Name	Tag Code		Property Set	Group	Name
	Dec	Hex			
ExposureTime	33434	829A	Image Info	Per Picture Camera Setting	Exposure time
FNumber	33437	829D	Image Info	Per Picture Camera Setting	F-number
ExposureProgram	34850	8822	Image Info	Per Picture Camera Setting	Exposure program
SpectralSensitivity	34852	8824	Image Info	Digital Camera Characterization	Spectral sensitivity
ISOSpeedRatings	34855	8827	Image Info	Digital Camera Characterization	ISO speed ratings
OECF	34857	8829	Image Info	Digital Camera Characterization	OECF
ExifVersion	36864	9000	-	-	-
DateTimeOriginal	36867	9003	Image Info	Content Description	Date of the original image
			Image Info	Per Picture Camera Setting	Capture date
DateTimeDigitized	36868	9004	Summary Info	-	Create date/time
ComponentsConfiguration	37121	9101	Ignore	Ignore	Ignore
CompressedBitsPerPixel	37122	9102	Ignore	Ignore	Ignore
ShutterSpeedValue	37377	9201	Image Info	Per Picture Camera Setting	Exposure time
ApertureValue	37378	9202	Image Info	Per Picture Camera Setting	F-number
BrightnessValue	37379	9203	Image Info	Per Picture Camera Setting	Brightness value
ExposureBiasValue	37380	9204	Image Info	Per Picture Camera Setting	Exposure bias value
MaxApertureValue	37381	9205	Image Info	Per Picture Camera Setting	Maximum aperture value
SubjectDistance	37382	9206	Image Info	Per Picture Camera Setting	Subject distance
MeteringMode	37383	9207	Image Info	Per Picture Camera Setting	Metering mode
LightSource	37384	9208	Image Info	Per Picture Camera Setting	Scene illuminant
Flash	37385	9209	Image Info	Per Picture Camera Setting	Flash
			Image Info	Per Picture Camera Setting	Flash return
FocalLength	37386	920A	Image Info	Per Picture Camera Setting	Focal length
MakerNote	37500	927C	-	-	-
UserComment	37510	9286	Image Info	Content description	Content description note
SubSecTime	37520	9290	Ignore	Ignore	Ignore
SubSecTimeOriginal	37521	9291	Image Info	Content Description	Date of the original image
			Image Info	Per Picture Camera Setting	Capture date
SubSecTimeDigitized	37522	9292	Summary Info	-	Create date/time
FlashPixVersion	40960	A000	-	-	-
ColorSpace	40961	A001	Image Contents	resolution description	Subimage color
PixelXDimension	40962	A002	Image Contents	Primary description	Highest resolution width
PixelYDimension	40963	A003	Image Contents	Primary description	Highest resolution height
RelatedSoundFile	40964	A004	-	-	-
FlashEnergy	41483	A20B	Image Info	Per Picture Camera Setting	Flash Energy
SpatialFrequencyResponse	41484	A20C	Image Info	Digital Camera Characterization	Spatial frequency response
FocalplaneXResolution	41486	A20E	Image Info	Digital Camera Characterization	Focal plane X resolution
FocalplaneYResolution	41487	A20F	Image Info	Digital Camera Characterization	Focal plane Y resolution
FocalplaneResolutionUnit	41488	A210	Image Info	Digital Camera Characterization	Focal plane resolution unit
SubjectLocation	41492	A214	Image Info	Per Picture Camera Setting	Subject location
ExposureIndex	41493	A215	Image Info	Per Picture Camera Setting	Exposure index
SensingMethod	41495	A217	Image Info	Digital Camera Characterization	Sensing method
FileSource	41728	A300	Image Info	File Source	File source
SceneType	41729	A301	Image Info	File Source	Scene type
CFAPattern	41730	A302	Image Info	Digital Camera Characterization	CFA pattern

Table 52 Conversion between Exif Tags and FlashPix Property Set (3) (GPS Info Tags)

Exif			FPX		
Field Name	Tag Code		Property Set	Group	Name
	Dec	Hex			
GPSVersionID	0	0	GPS Info extension	-	GPSVersionID
GPSLatitudeRef	1	1	GPS Info extension	-	GPSLatitudeRef
GPSLatitude	2	2	GPS Info extension	-	GPSLatitude
GPSLongitudeRef	3	3	GPS Info extension	-	GPSLongitudeRef
GPSLongitude	4	4	GPS Info extension	-	GPSLongitude
GPSAltitudeRef	5	5	GPS Info extension	-	GPSAltitudeRef
GPSAltitude	6	6	GPS Info extension	-	GPSAltitude
GPSTimeStamp	7	7	GPS Info extension	-	GPSTimeStamp
GPSSatellites	8	8	GPS Info extension	-	GPSSatellites
GPSStatus	9	9	GPS Info extension	-	GPSStatus
GPSMeasureMode	10	A	GPS Info extension	-	GPSMeasureMode
GPSDOP	11	B	GPS Info extension	-	GPSDOP
GPSSpeedRef	12	C	GPS Info extension	-	GPSSpeedRef
GPSSpeed	13	D	GPS Info extension	-	GPSSpeed
GPSTrackRef	14	E	GPS Info extension	-	GPSTrackRef
GPSTrack	15	F	GPS Info extension	-	GPSTrack
GPSImgDirectionRef	16	10	GPS Info extension	-	GPSImgDirectionRef
GPSImgDirection	17	11	GPS Info extension	-	GPSImgDirection
GPSMapDatum	18	12	GPS Info extension	-	GPSMapDatum
GPSDestLatitudeRef	19	13	GPS Info extension	-	GPSDestLatitudeRef
GPSDestLatitude	20	14	GPS Info extension	-	GPSDestLatitude
GPSDestLongitudeRef	21	15	GPS Info extension	-	GPSDestLongitudeRef
GPSDestLongitude	22	16	GPS Info extension	-	GPSDestLongitude
GPSDestBearingRef	23	17	GPS Info extension	-	GPSDestBearingRef
GPSDestBearing	24	18	GPS Info extension	-	GPSDestBearing
GPSDestDistanceRef	25	19	GPS Info extension	-	GPSDestDistanceRef
GPSDestDistance	26	1A	GPS Info extension	-	GPSDestDistance

F.3 Converting to FlashPix Extensions (APP2)

The extended data recorded in APP2 marker segments can be converted readily to FlashPix extensions.

First of all, Fig. 54 shows the conversion process when APP2 is recorded as one Interoperability per stream of data.

An area with data size of 8000.H, Default value 00.H is allocated to the stream name "/¥005MyPropertySet" (¥005 means 005.H) in the FlashPix file Structured Storage structure, and the stream data recorded in APP2-2 is copied to offset 00000000.H, that is, the start of the allocated area.

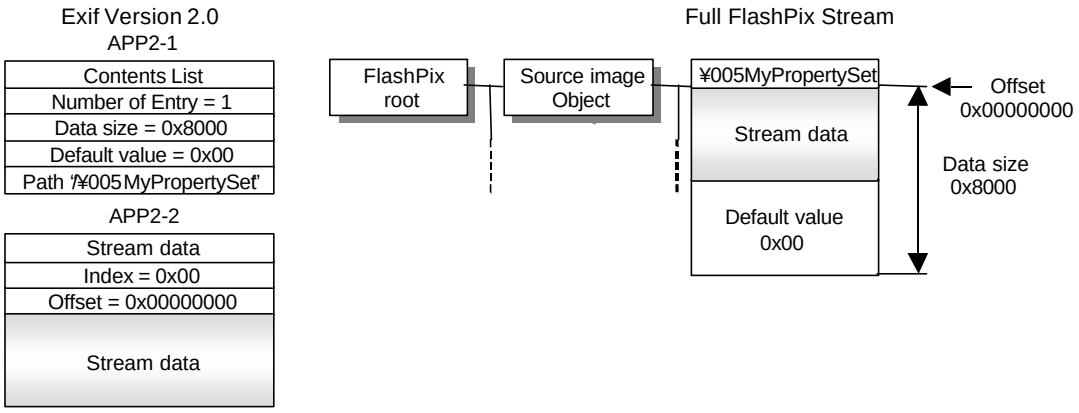

Fig. 54 Conversion to FlashPix Extensions (1)

Next, Fig. 55 shows the conversion process when one Interoperability per two streams of data is recorded in APP2.

This time an area with data size of 10000.H, Default value 00.H is allocated to the stream name "/¥005MyPropertySet" in the FlashPix file Structured Storage structure, and the stream data recorded in APP2-2 is copied to offset 00000000.H, that is, the start of the allocated area, while the stream data recorded in APP2-3 is copied starting from offset 00008000.H.

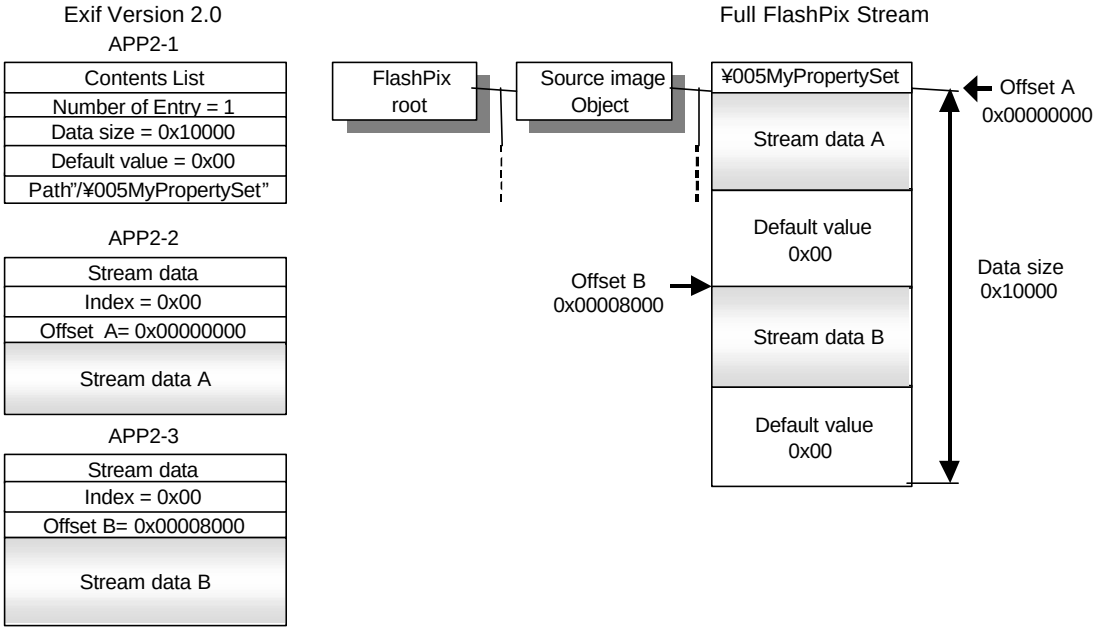

Fig. 55 Conversion to FlashPix Extensions (2)

Finally, Fig. 56 shows an example of conversion when 2 Interoperability per stream of data are recorded in APP2.

Here a data size of 8000.H, Default value 00.H is allocated to the stream name "MyPropertySet" Interoperability the storage name "¥005MyStorage" in the FlashPix file Structured Storage structure, and the stream data recorded in APP2-2 is copied to offset 00000000.H, that is, the start of the allocated area.

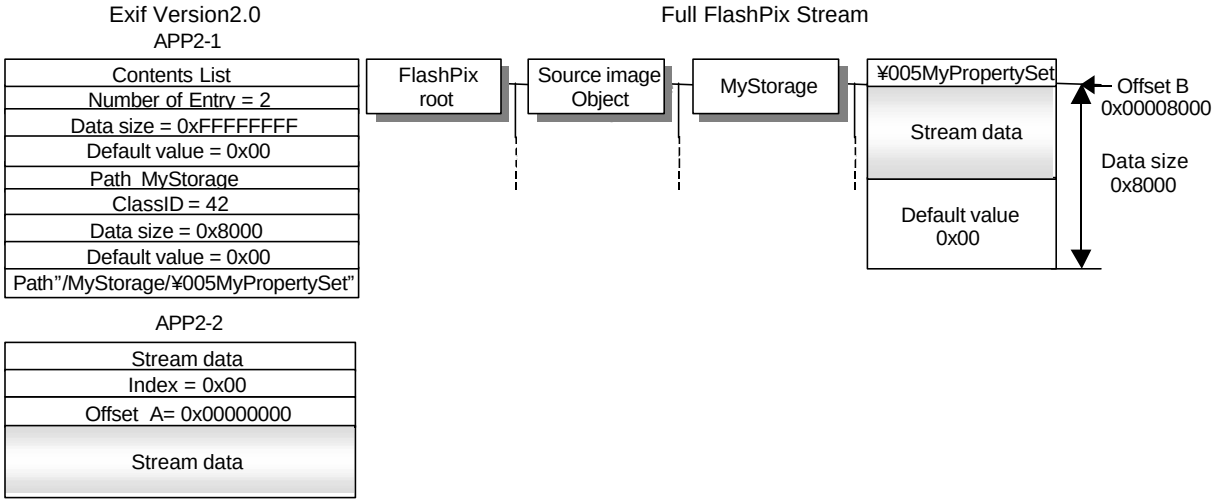

Fig. 56 Conversion to FlashPix Extensions (3)

References

[i] Digital Still Camera Image File Format Standard (Exif) Version 1.0, October 1995, Japan Electronic Industry Development Association.

[ii] Digital Still Camera Image File Format Standard (Exif) Version 1.1, May 1997, Japan Electronic Industry Development Association.

[iii] Digital Still Camera Image File Format Standard (Exif) Version 2.0, Nov 1997, Japan Electronic Industry Development Association.

[iv] ISO/IEC 10918-1 / ITU-T Recommendation T.81 information technology - Digital compression and coding of continuous-tone still images - Requirements and guide-lines

[v] TIFF Revision 6.0 Final, June 3, 1992, AldusCorporation.

[vi] FlashPix Format Specification Version 1.0, September 11, 1996, Eastman Kodak Company.

[vii] New Multimedia Data Types and Data Techniques, 1996, Microsoft Corporation.

[viii] ITU-T G.711, Pulse code modulation (PCM) of Voice Frequencies.

[ix] Recommended Practices for Enhancing Digital Audio Compatibility in Multimedia Systems Revision 3.00, October 21, 1992, Interoperability Multimedia Association(IMA)

[x] JIS X 0208:1990 Code of the Japanese graphic character set for information Interoperability.

[xi] ITU-T T.50 (09/92) Interoperability Reference Alphabet (IRA) (Formerly Interoperability Alphabet No.5 or IA5)

[xii] Unicode Standard, The Unicode Consortium, 1991, Addison-Wesley.

[xiii] New Standard Practice for the Electronic Interoperability of Color and Appearance Data, ASTM Technical Committee

[xiv] ISO 12232, Photography-Electronic still picture cameras-Determination of ISO speed.

[xv] ISO 14524, Photography-Electronic still picture cameras-Methods for measuring the opto-electronic conversion functions.

[xvi] ISO 12233, Photography-Electronic still picture cameras-Resolution measurements.

[xvii] IMA Digital Audio Doc-Pac, 1992, Interoperability Multimedia Association

[xviii] IEC TC100, 100/43/NP: Colour measurement and management in multimedia systems and equipment, Part 2.1 of the approved project 61966: Colour management in multimedia systems - Default RGB colour space - sRGB (Interoperability discussion)

[xix] ITU-R BT.709, Basic Parameter Values for the HDTV Standard for the Studio and for Interoperability Programm Exchange.

[xx] ITU-R.BT.601, Encoding Parameters of Digital Television for Studios.