US009333946B2

(12) **United States Patent**
**Simon**

(10) **Patent No.: US 9,333,946 B2**
(45) **Date of Patent: May 10, 2016**

(54) **SYSTEM AND METHOD FOR IDENTIFYING VEHICLE BY UTILIZING DETECTED MAGNETIC FIELD**

(71) Applicant: **Sascha Simon**, Warwick, NY (US)

(72) Inventor: **Sascha Simon**, Warwick, NY (US)

(73) Assignee: **APIO SYSTEMS, INC.**, Rochelle Park, NJ (US)

( * ) Notice: Subject to any disclaimer, the term of this patent is extended or adjusted under 35 U.S.C. 154(b) by 445 days.

(21) Appl. No.: **14/072,231**

(22) Filed: **Nov. 5, 2013**

(65) **Prior Publication Data**

US 2014/0180615 A1 Jun. 26, 2014

**Related U.S. Application Data**

(60) Provisional application No. 61/740,814, filed on Dec. 21, 2012, provisional application No. 61/740,831, filed on Dec. 21, 2012, provisional application No. 61/740,851, filed on Dec. 21, 2012, provisional application No. 61/745,677, filed on Dec. 24, 2012.

(51) **Int. Cl.**
***G06F 19/00*** (2011.01)
***B60R 25/24*** (2013.01)

(52) **U.S. Cl.**
CPC ..... ***B60R 25/24*** (2013.01)

(58) **Field of Classification Search**
CPC .... B60R 25/24; A61B 5/0022; A61B 5/1118; A61B 2560/0214
USPC ..... 702/65, 64, 150, 155, 182–185, 188
See application file for complete search history.

(56) **References Cited**

U.S. PATENT DOCUMENTS

5,785,347 A 7/1998 Adolph et al.
6,411,250 B1 6/2002 Oswald et al.
7,136,828 B1 11/2006 Allen et al.
(Continued)

FOREIGN PATENT DOCUMENTS

EP 0461688 A2 12/1991
JP 10-260241 A 9/1998
(Continued)

OTHER PUBLICATIONS

PCT/US2013/076432 Internatioral Search Report and Written Opinion, Apr. 9, 2014, Ham, Joung Hyun.
(Continued)

*Primary Examiner* — Edward Raymond
(74) *Attorney, Agent, or Firm* — John T. Whelan

(57) **ABSTRACT**

A device includes a field-detecting component, an input component, an accessing component, a comparing component and an identifying component. The field-detecting component can detect a field and generate a detected field signature based thereon. The input component can input the detected field signature into a database. The accessing component can access the detected field signature from the database. The comparing component can generate a comparison signal. The identifying component can identify item or location based on the comparison signal. The field-detecting component can further detect a second field and generate a second detected field signature based on the detected second field. The comparing component can generate the comparison signal based on a comparison of the detected field signature and the second detected field signature.

**42 Claims, 10 Drawing Sheets**

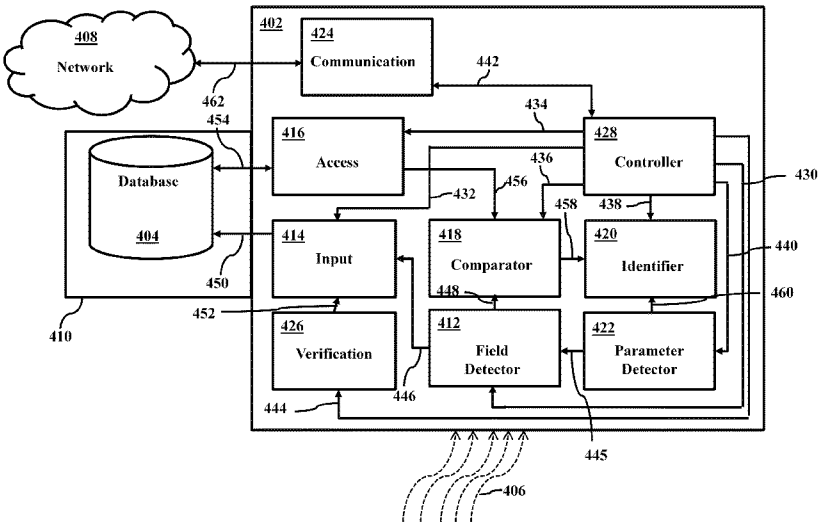

(56) **References Cited**

U.S. PATENT DOCUMENTS

| | | | | |
|---|---|---|---|---|
| 7,415,126 | B2 | 8/2008 | Breed et al. | |
| 7,904,053 | B2 | 3/2011 | Krasner et al. | |
| 8,082,014 | B2 | 12/2011 | Causey et al. | |
| 9,286,783 | B1 * | 3/2016 | Teller | G08B 21/24 |
| 2003/0029345 | A1 | 2/2003 | Tiernan et al. | |
| 2003/0209893 | A1 | 11/2003 | Breed et al. | |
| 2004/0152471 | A1 | 8/2004 | Macdonald et al. | |
| 2004/0257208 | A1 | 12/2004 | Huang et al. | |
| 2006/0085153 | A1 | 4/2006 | Oesterling et al. | |
| 2006/0089153 | A1 | 4/2006 | Sheynblat | |
| 2007/0021915 | A1 | 1/2007 | Breed et al. | |
| 2008/0040004 | A1 * | 2/2008 | Breed | B60R 21/0134 701/45 |
| 2008/0203814 | A1 | 8/2008 | Kamiya | |
| 2008/0287143 | A1 | 11/2008 | Banks et al. | |
| 2009/0037056 | A1 | 2/2009 | Erb | |
| 2009/0309709 | A1 | 12/2009 | Bevacqua et al. | |
| 2010/0063649 | A1 | 3/2010 | Wu et al. | |
| 2011/0169654 | A1 | 7/2011 | Ketari | |
| 2011/0301795 | A1 | 12/2011 | Failing | |
| 2012/0123634 | A1 | 5/2012 | Shimizu | |
| 2012/0135764 | A1 | 5/2012 | Ohashi | |
| 2012/0158249 | A1 | 6/2012 | Xu et al. | |
| 2012/0208517 | A1 | 8/2012 | Zohar | |
| 2012/0282885 | A1 | 11/2012 | Hamed et al. | |
| 2013/0130639 | A1 | 5/2013 | Oesterling et al. | |
| 2013/0253775 | A1 | 9/2013 | Shimizu | |
| 2014/0179348 | A1 | 6/2014 | Simon | |
| 2014/0179353 | A1 | 6/2014 | Simon | |
| 2014/0180563 | A1 | 6/2014 | Simon | |
| 2014/0180615 | A1 | 6/2014 | Simon | |

FOREIGN PATENT DOCUMENTS

| | | | |
|---|---|---|---|
| JP | 2007-183865 | A | 7/2007 |
| JP | 2009-177758 | A | 8/2009 |
| WO | WO 03-095276 | A1 | 11/2003 |

OTHER PUBLICATIONS

PCT/US2013/076410 International Search Reportand Written Opinion, Apr. 7, 2014, Song, Ho Keun.
PCT/US2013/076426 International Search Report and Written Opinion, Apr. 9, 2014, Ham, Joung Hyun.
PCT/US2013/076440 International Search Report and Written Opinion, Apr. 9, 2014, Sohn, Byoung Cheol.

* cited by examiner

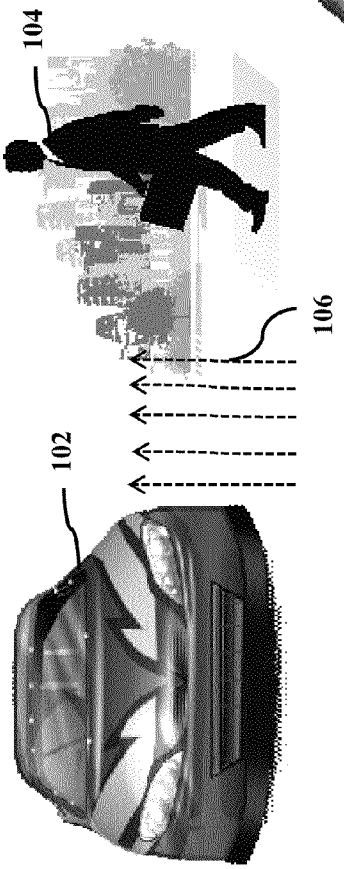


FIG. 1A

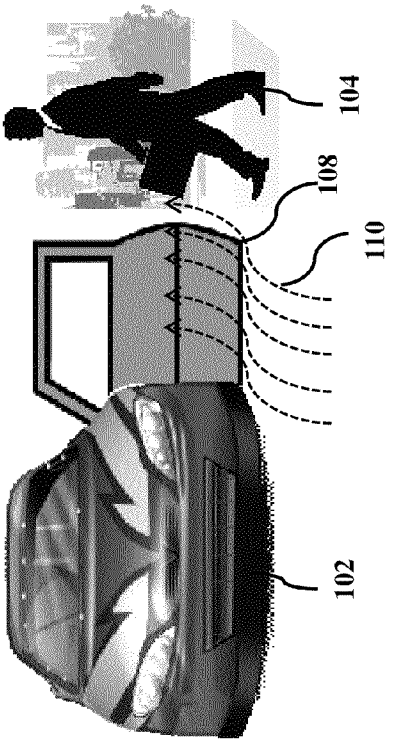


FIG. 1B

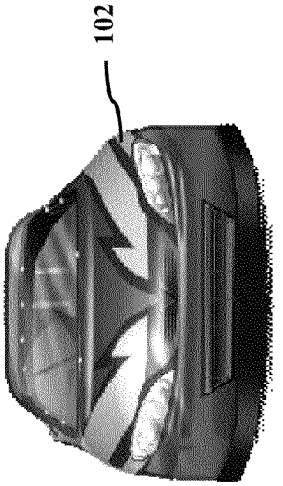


FIG. 1C

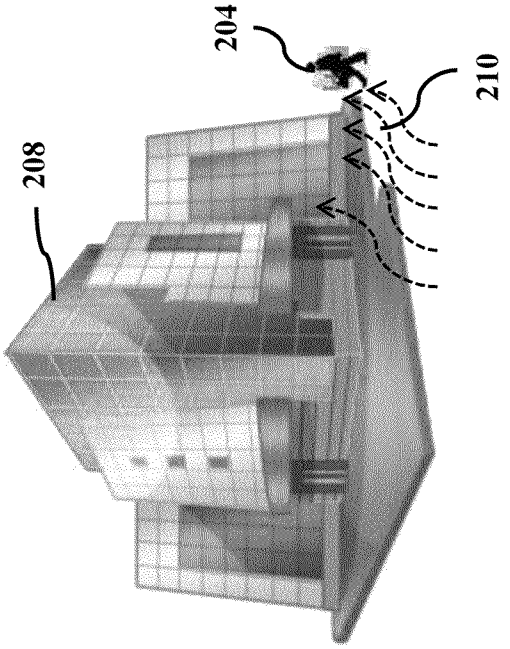


FIG. 2B

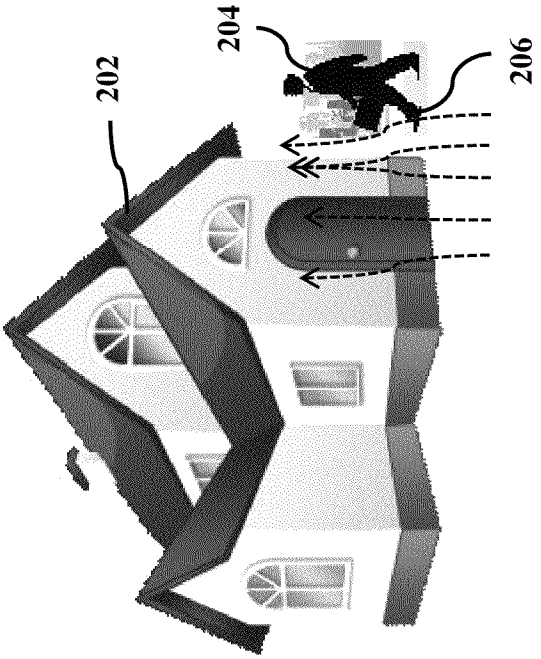


FIG. 2A

FIG. 5

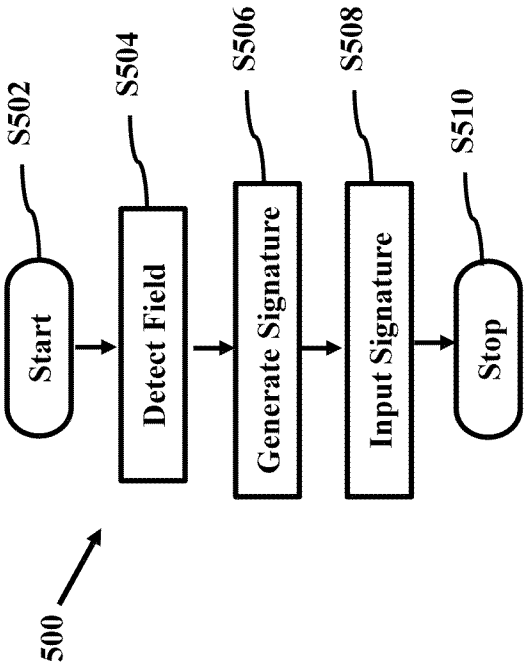
500
Start
S502
Detect Field
S504
Generate Signature
S506
Input Signature
S508
Stop
S510

FIG. 3

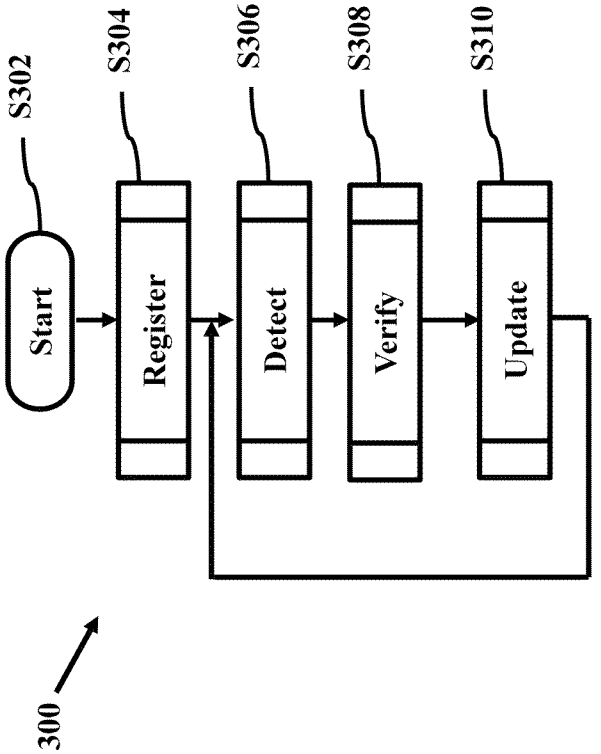
300
Start
S302
Register
S304
Detect
S306
Verify
S308
Update
S310

FIG. 4

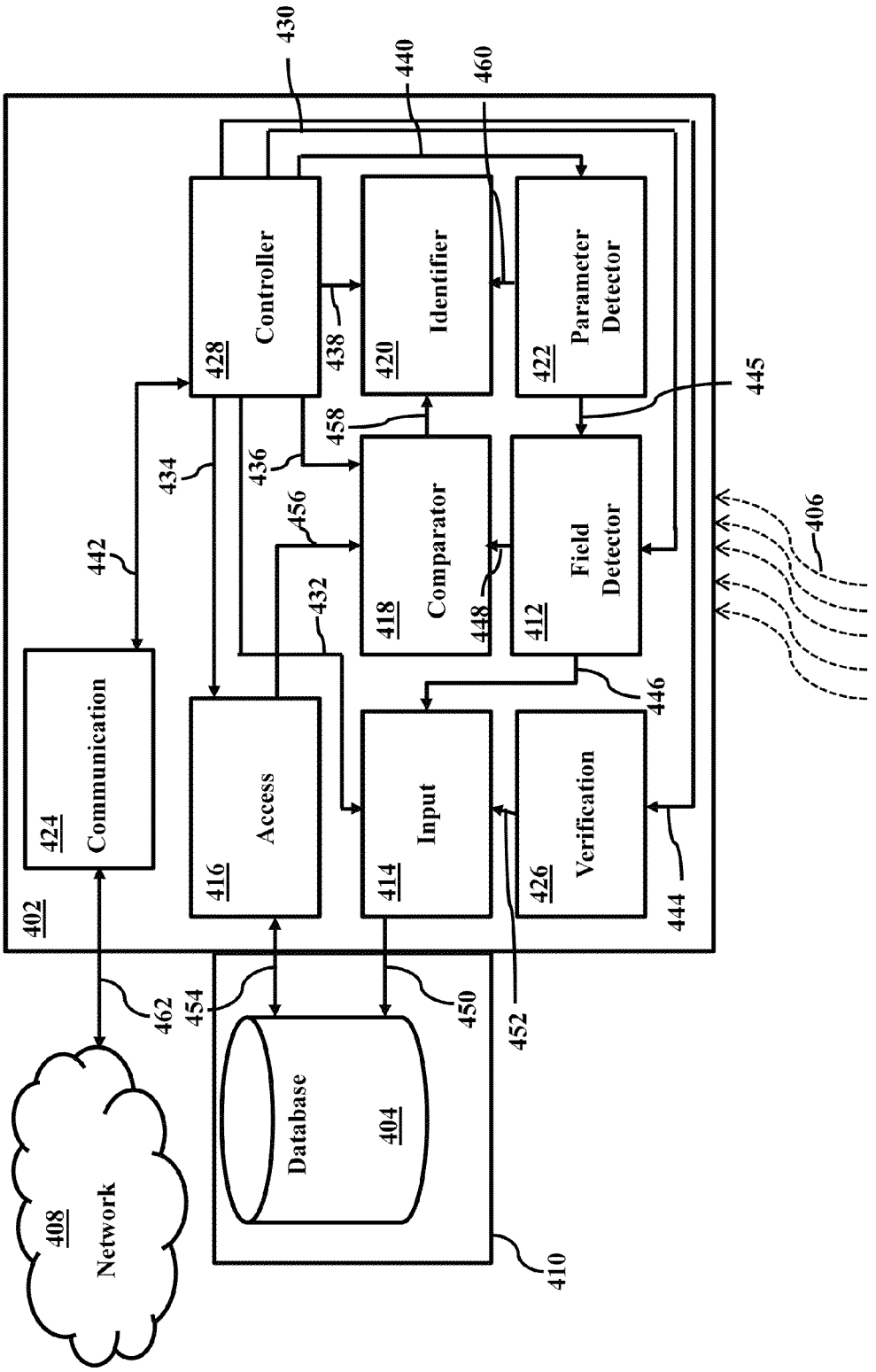

Controller
428
Identifier
420
Parameter Detector
422
Comparator
418
Field Detector
412
Communication
424
Access
416
Input
414
Verification
426
Database
404
Network
408
402
410
430
440
460
438
458
445
434
436
456
442
432
448
446
406
444
462
454
450
452

FIG. 6

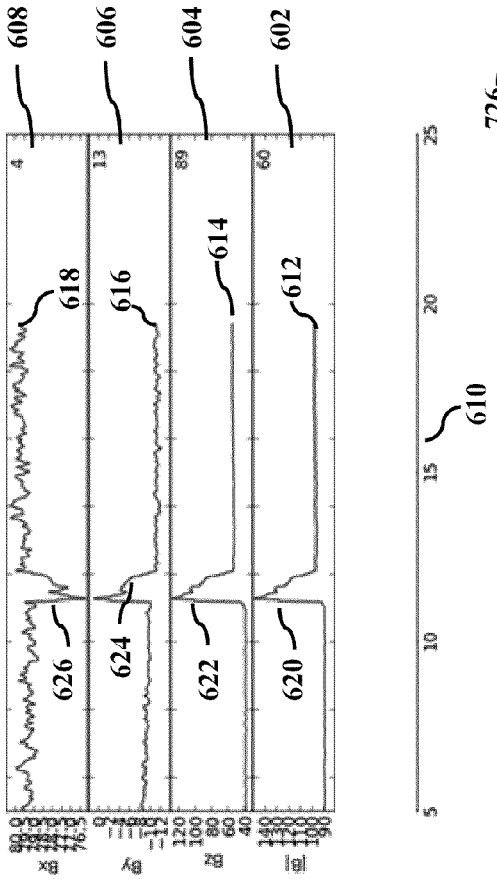
608
606
604
602
618
616
614
612
626
624
622
620
610
Bx
By
Bz
|B|

FIG. 7

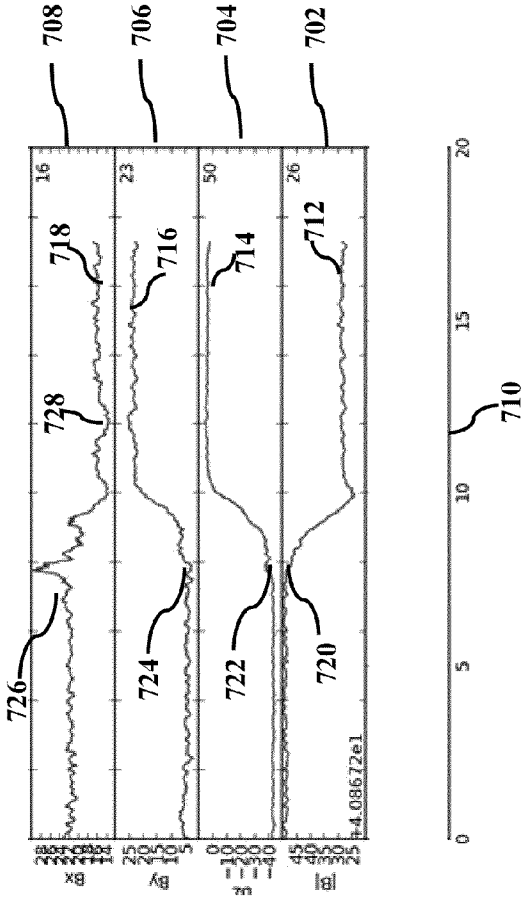
708
706
704
702
718
716
714
712
728
726
724
722
720
710
Bx
By
Bz
|B|
+4.08672e1

FIG. 8

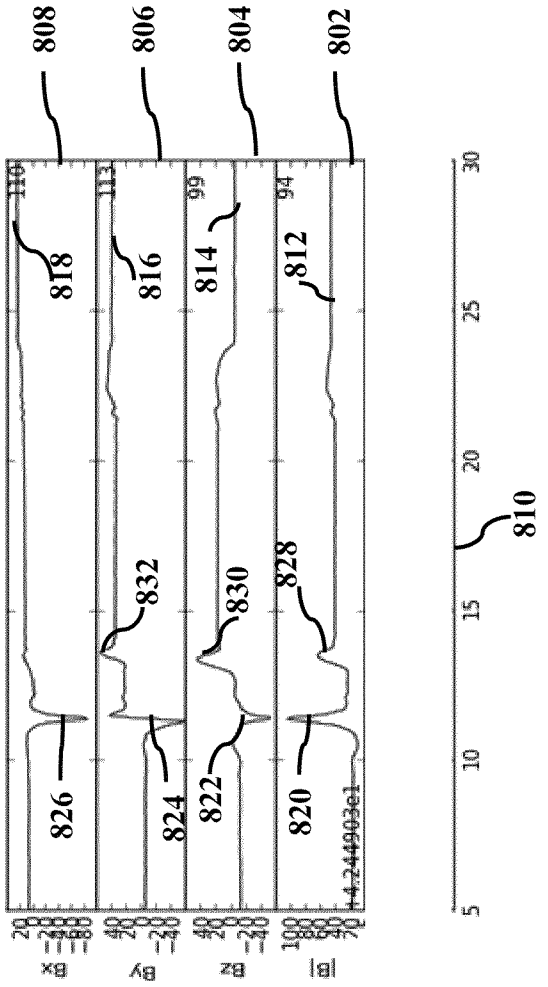
808
806
804
802
818
816
814
812
832
830
828
826
824
822
820
810
Bx
By
Bz
|B|
116
113
99
94
5
10
15
20
25
30

FIG. 9

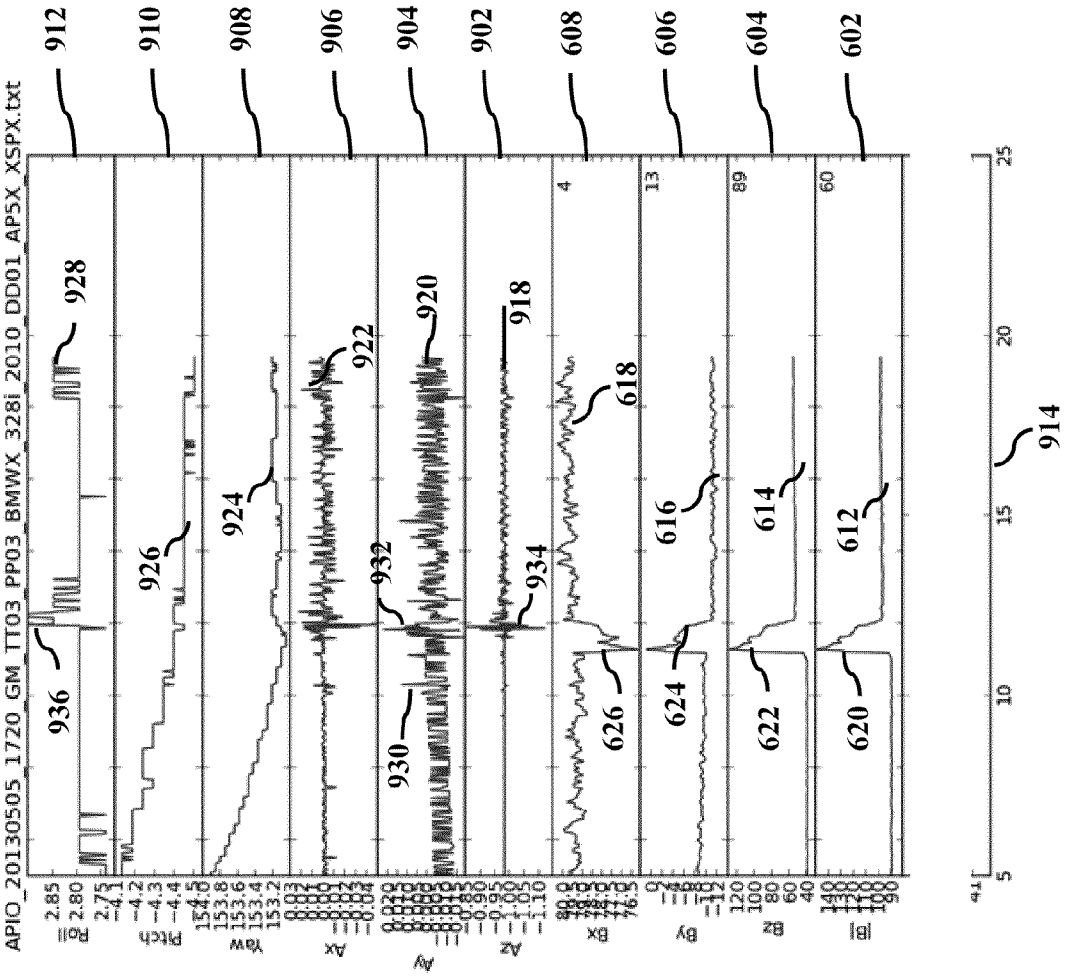
APIO_20130505_1720_GM_TT03_PP03_BMWX_328i_2010_DD01_AP5X_XSPX.txt
Roll
Pitch
Yaw
Ax
Ay
Az
Bx
By
Bz
|B|
912
910
908
906
904
902
608
606
604
602
928
926
924
922
920
918
936
932
930
934
618
616
614
612
626
624
622
620
914
5
10
15
20
25

FIG. 10

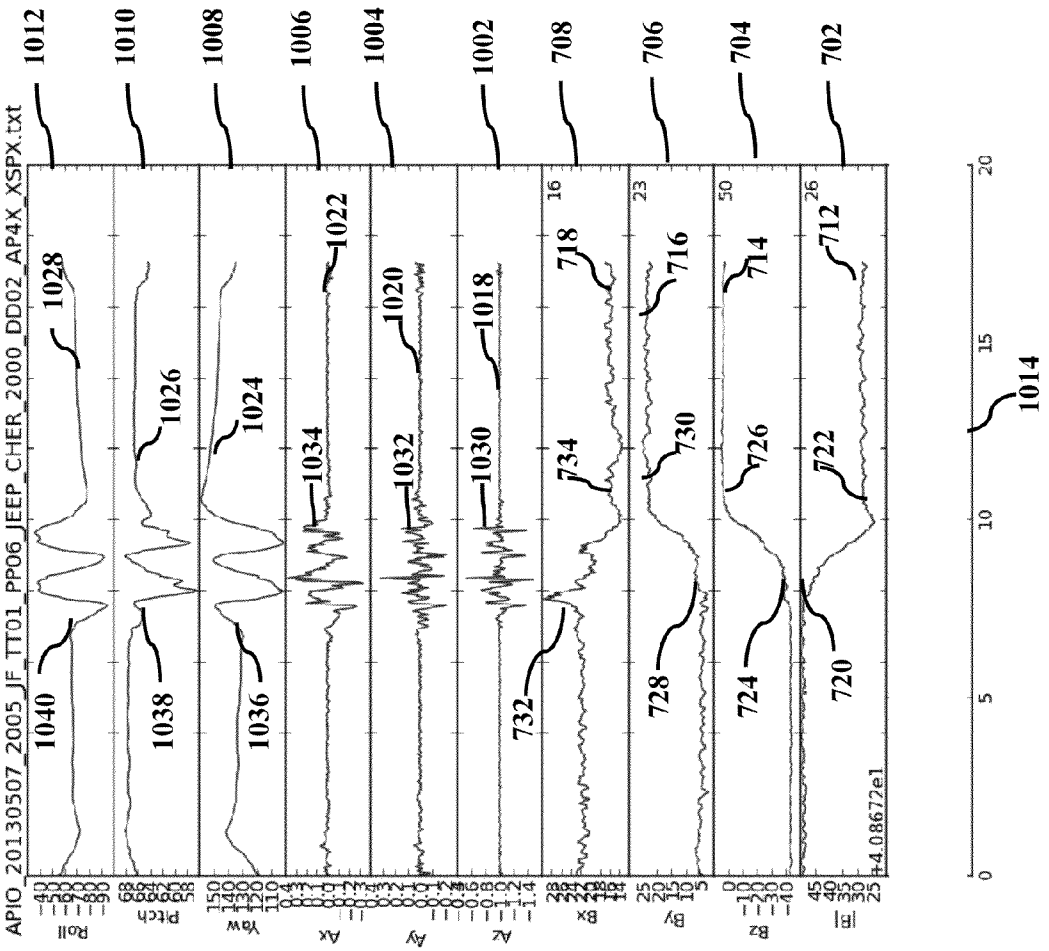
APIO_20130507_2005_JF_TT01_PP06_JEEP_CHER_2000_DD02_AP4X_XSPX.txt
Roll
Pitch
Yaw
Ax
Ay
Az
Bx
By
Bz
|B|
4.08672e1
1012
1010
1008
1006
1004
1002
708
706
704
702
1028
1026
1024
1022
1020
1018
1040
1038
1036
1034
1032
1030
734
732
718
716
714
712
730
728
726
724
722
720
1014
0
5
10
15
20

FIG. 11

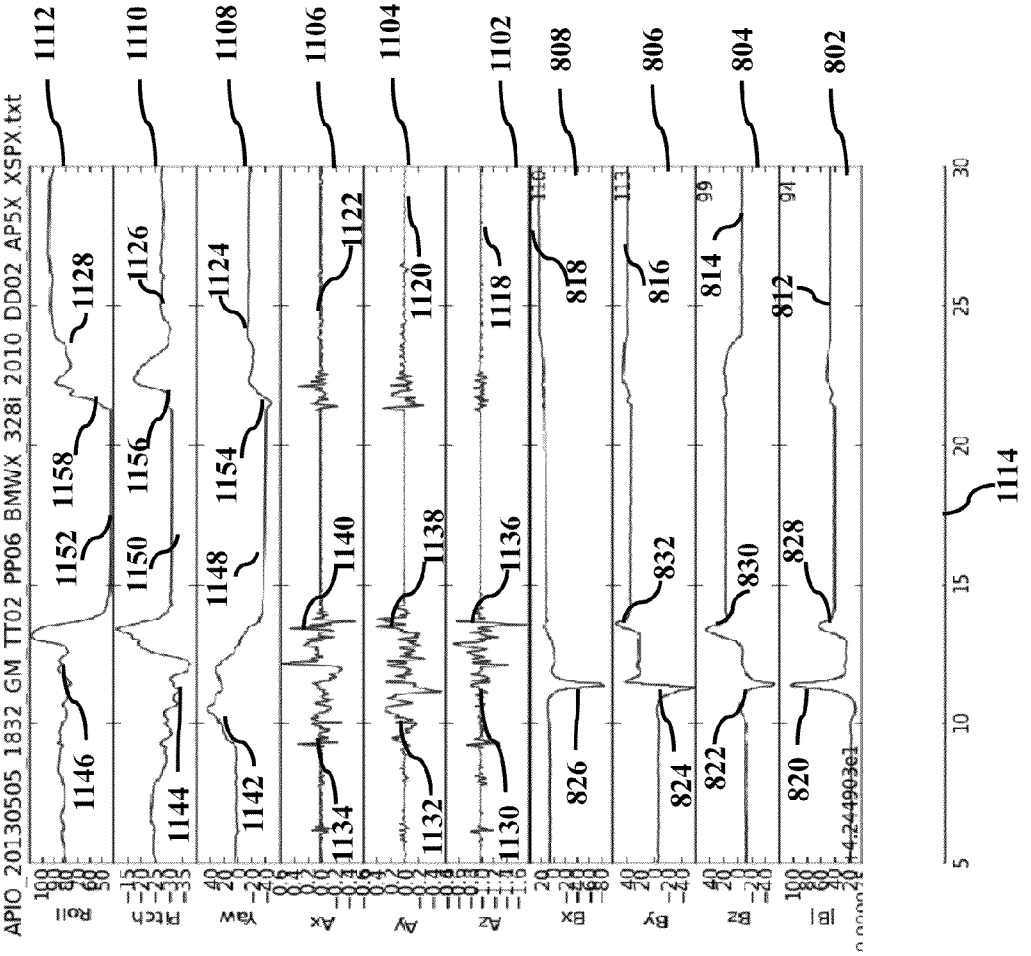
APIO_20130505_1832_GM_TT02_PP06_BMWX_328i_2010_DD02_AP5X_XSPX.txt
Roll
Pitch
Yaw
Ax
Ay
Az
Bx
By
Bz
|B|
1112
1110
1108
1106
1104
1102
808
806
804
802
1146
1152
1158
1128
1144
1150
1156
1126
1142
1148
1154
1124
1134
1140
1122
1132
1138
1120
1130
1136
1118
826
818
824
832
816
822
830
814
820
828
812
1114
5
10
15
20
25
30

FIG. 13

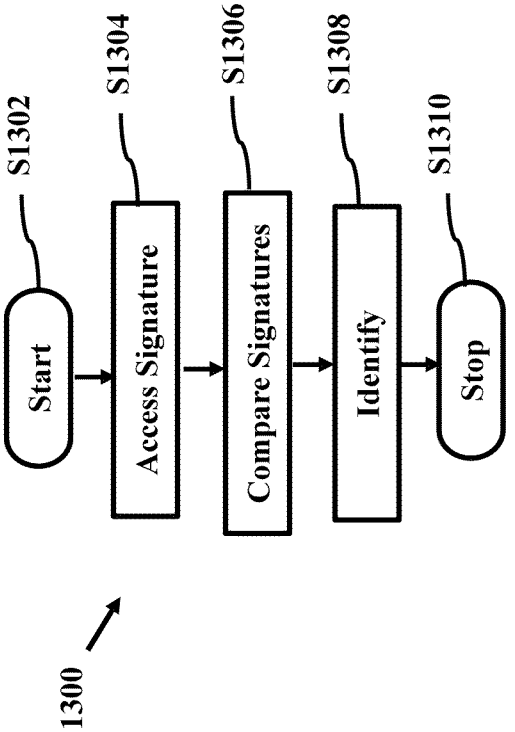
1300
Start
S1302
Access Signature
S1304
Compare Signatures
S1306
Identify
S1308
Stop
S1310

FIG. 12

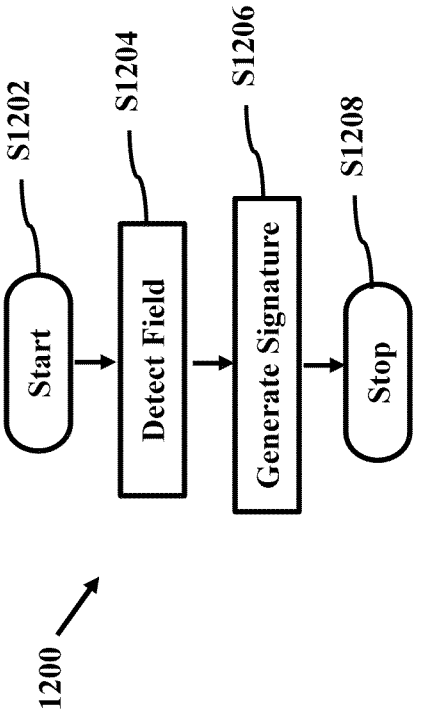
1200
Start
S1202
Detect Field
S1204
Generate Signature
S1206
Stop
S1208

# SYSTEM AND METHOD FOR IDENTIFYING VEHICLE BY UTILIZING DETECTED MAGNETIC FIELD

The present application claims priority from: U.S. Provisional Application No. 61/740,814 filed Dec. 21, 2012; U.S. Provisional Application. No. 61/740,831 filed Dec. 21, 2012; U.S. Provisional Application No. 61/740,851 filed Dec. 21, 2012; and U.S. Provisional Application No. 61/745,677 filed Dec. 24, 2012, the entire disclosures of which are incorporated herein by reference.

## BACKGROUND

Vehicle telematics is the technology of sending, receiving and storing information to and from vehicles and is generally present (at least to a limited extent) in the automotive marketplace today. For example, both General Motors (through their OnStar offering) and Mercedes Benz (through their Tele-Aid and more recent embrace system offering) have long offered connected-vehicle functionality to their customers. Both of these offerings make use of the data available on a vehicle's CAN bus, which is specified in the OBD-II vehicle diagnostics standard. For example, the deployment of an airbag, which suggests that the vehicle has been involved in a crash, may be detected by monitoring the CAN bus. In this event, a digital wireless telephony module that is embedded in the vehicle and connected to the vehicle's audio system (i.e., having voice connectivity) can initiate a phone call to a telematics service provider (TSP) to "report" the crash. Vehicle location may also be provided to the TSP using the vehicle's GPS functionality. Once the call is established, the TSP representative may attempt to communicate with the vehicle driver, using the vehicle's audio system, to assess the severity of the situation. Assistance may thus be dispatched by the TSP representative to the vehicle as appropriate.

Historically, these services were focused entirely on driver and passenger safety. These types of services have expanded since their initial roll-out, however, and now offer additional features to the driver, such as concierge services. The services, however, remain mainly focused on voice based driver to call center communication, with data services being only slowly introduced, hindered by low bandwidth communication modules, high cost and only partial availability on some model lines.

As a result, while generally functional, vehicle telematics services have experienced only limited commercial acceptance in the marketplace. There are several reasons for this. In addition to low speeds and bandwidth, most vehicle drivers (perhaps excluding the premium automotive market niche) are reluctant to pay extra for vehicle telematics services, either in the form of an upfront payment (i.e., more expensive vehicle) or a recurring (monthly/yearly) service fee. Moreover, from the vehicle manufacturer's perspective, the services require additional hardware to be embedded into the vehicle, resulting in extra costs on the order of $250 to $350 or more per vehicle which cannot be recouped. Thus, manufacturers have been slow to fully commit to or invest in the provision of vehicle telematics equipment in all vehicles.

There have been rudimentary attempts in the past to determine when a smartphone is in a moving vehicle. Wireless service provider AT&T, Sprint and Verizon, for example, offer a smartphone application that reacts in a specific manner to incoming text messages and voice calls when a phone is in what AT&T calls DriveMode™. With the AT&T DriveMode™ application, a wireless telephone is considered to be in "drive mode" when one of two conditions are met. First, the



smartphone operator can manually turn on the application, i.e., she "tells" the application to enter drive mode. Alternatively, when the DriveMode application is in automatic on/off mode and the smartphone GPS sensor senses that the smartphone is travelling at greater than 25 miles per hour, the GPS sensor so informs the DriveMode application, the DriveMode application concludes that the smartphone is in a moving vehicle, and drive mode is entered.

Both of these paths to engaging the AT&T DriveMode application—the "manual" approach to entering drive mode and the "automatic" approach to entering drive mode—are problematic. First, if the smartphone operator forgets or simply chooses not to launch the DriveMode application prior to driving the vehicle when the application is in manual mode then the application will not launch. Second, in automatic on/off mode AT&T's use of only the GPS sensor to determine when a smartphone is in a moving vehicle is problematic for a number of reasons. First, the speed threshold of the application is arbitrary, meaning that drive mode will not be detected/engaged at less than 25 mph. If the vehicle is stopped in traffic or at a traffic signal, for example, then the DriveMode application may inadvertently terminate. Second, and perhaps more importantly, AT&T's DriveMode application requires that the smartphone's GPS functionality be turned on at all times. Because the use of a smartphone's GPS sensor is extremely demanding to the battery resources of a smartphone, this requirement severely undermines the usefulness of AT&T's application. Thirdly this method does not differentiate between the type of vehicle that the phone is in, e.g. a bus, a taxi or a train and therefore allows no correlation between the owner of the phone and her driving situation. For the classic embedded telematics devices to be replaces by smartphones it is important to correlate the driver and smartphone owner with her personal vehicle. Only then the smartphone can truly take the functional role of an embedded telematics device in a vehicle.

Accordingly, for at least the foregoing reasons there exists a need and it is an object of the present invention to provide an improved method and apparatus of determining the specific identity and type of vehicle a smartphone is in.

## SUMMARY

The present invention provides an improved method and apparatus of determining the specific identity and type of vehicle a smartphone is in.

Various embodiments described herein are drawn to a device, for use with a database. The device includes a field-detecting component, an input component, an accessing component, a comparing component and an identifying component. The field-detecting component can detect at least one of an electric field, a magnetic field and an electro-magnetic field and can generate a detected field signature based on the detected one of an electric field, a magnetic field and an electro-magnetic field. The input component can input the detected field signature into the database. The accessing component can access the detected field signature from the database. The comparing component can generate a comparison signal. The identifying component can identify one of an item and a location based on the comparison signal. The field-detecting component can further detect a second one of an electric field, a magnetic field and an electro-magnetic field and can generate a second detected field signature based on the detected second one of an electric field, a magnetic field and an electro-magnetic field. The comparing component can

generate the comparison signal based on a comparison of the detected field signature and the second detected field signature.

## BRIEF SUMMARY OF THE DRAWINGS

The accompanying drawings, which are incorporated in and form a part of the specification, illustrate an exemplary embodiment of the present invention and, together with the description, serve to explain the principles of the invention. In the drawings:

FIGS. **1**A-C illustrate a person and a vehicle at times $t_1$, $t_2$ and $t_3$, respectively;

FIGS. **2**A-B illustrate a house and a building, respectively;

FIG. **3** illustrates an example method of identifying an item or a location in accordance with aspects of the present invention;

FIG. **4** illustrates an example device for identifying an item or a location in accordance with aspects of the present invention;

FIG. **5** illustrates an example method of registering an item or a location in accordance with aspects of the present invention;

FIG. **6** illustrates an example of measured magnetic fields associated with a vehicle in accordance with aspects of the present invention;

FIG. **7** illustrates another example of measured magnetic fields associated with a vehicle in accordance with aspects of the present invention;

FIG. **8** illustrates another example of measured magnetic fields associated with a vehicle in accordance with aspects of the present invention;

FIG. **9** illustrates an example of measured magnetic fields and of measured acceleration associated with a vehicle in accordance with aspects of the present invention;

FIG. **10** illustrates another example of measured magnetic fields and of measured acceleration associated with a vehicle in accordance with aspects of the present invention;

FIG. **11** illustrates another example of measured magnetic fields and of measured acceleration associated with a vehicle in accordance with aspects of the present invention;

FIG. **12** illustrates an example method of detecting an item or a location in accordance with aspects of the present invention; and

FIG. **13** illustrates an example method of verifying an item or a location in accordance with aspects of the present invention.

## DETAILED DESCRIPTION

Aspects of the present invention are drawn to a system and method for determining a specific item and/or location by utilizing field properties within and/or near the specific item and or location.

As used herein, the term "smartphone" includes cellular and/or satellite radiotelephone(s) with or without a display (text/graphical); Personal Communications System (PCS) terminal(s) that may combine a radiotelephone with data processing, facsimile and/or data communications capabilities; Personal Digital Assistant(s) (PDA) or other devices that can include a radio frequency transceiver and a pager, Internet/Intranet access, Web browser, organizer, calendar and/or a global positioning system (GPS) receiver; and/or conventional laptop (notebook) and/or palmtop (netbook) computer(s), tablet(s), or other appliance(s), which include a radio frequency transceiver. As used herein, the term "smartphone" also includes any other radiating user device that may have time-varying or fixed geographic coordinates and/or may be portable, transportable, installed in a vehicle (aeronautical, maritime, or land-based) and/or situated and/or configured to operate locally and/or in a distributed fashion over one or more location(s).

In one non-limiting example embodiment, a smartphone is used to measure a magnetic field associated with a vehicle to identify the vehicle. In another non-limiting example embodiment, a smartphone is used to measure a magnetic field associated with a house to identify the location of the user of the smartphone. These aspects will now be described in more detail with reference to FIGS. **1**A-**2**B.

As shown in FIG. **1**A, at time $t_1$, a magnetic field **106** is located near vehicle **102**. For purposes of discussion, person **104** is holding a device (not shown) in accordance with an aspect of the present invention. In this specific example, the device in accordance with an aspect of the present invention is embodied in a smartphone. In this specific example, the smartphone is able to detect magnetic field **106**.

As shown in FIG. **1**B, at time $t_3$, the opening of door **108** affects the magnetic field located near vehicle **102**, as shown by filed lines **110**. Again the smartphone is able to detect magnetic field shown by field lines **110**.

As shown in FIG. **1**C, at time $t_3$, the smartphone is not detecting the magnetic field outside of vehicle **102**.

In accordance with example aspects of the present invention, a smartphone carried by person **104** may identify vehicle **102** by aspects of magnetic field **102** or magnetic field **108**. Non-limiting detectable aspects of the magnetic fields include an instantaneous magnitude, an instantaneous field vector, a magnitude as a function over a period of time, a field vector as a function over a period of time and combinations thereof.

In accordance with other example aspects of the present invention, a smartphone carried by person **104** may identify vehicle **102** by aspects of a change of magnetic field **102** to magnetic field **108**. Non-limiting detectable aspects of the change magnetic fields include an instantaneous change in magnitude, an instantaneous change in field vector, a change in magnitude as a function over a period of time, a change in field vector as a function over a period of time and combinations thereof.

In addition to identifying an item, as discussed above with reference to FIGS. **1**A-**1**C, aspects of the present invention may be used to identify a location.

As shown in FIG. **2**A, at time $t_4$, a person **204** is entering a house **202**. A magnetic field **206** is located near house **202**. For purposes of discussion, person **204** is holding a device (not shown) in accordance with an aspect of the present invention. In this specific example, the device in accordance with an aspect of the present invention is embodied in a smartphone. In this specific example, the smartphone is able to detect magnetic field **106**.

As shown in FIG. **2**B, at time $t_5$, person **204** is entering a building **208**. A magnetic field **210** is located near building **208**. Again the smartphone is able to detect magnetic field **210**.

In accordance with example aspects of the present invention, a smartphone carried by person **104** may identify whether person **204** is entering house **202** or building **208** by aspects of magnetic field **206** or magnetic field **210**.

A more detailed discussion of example working embodiment will now be discussed with additional reference to FIGS. **3**-**13**.

FIG. **3** illustrates an example method **300** of identifying an item or a location in accordance with aspects of the present invention.

Method **300** starts (S**302**) and an item or location is registered (S**304**). For example, if a person would like to be able to identify their vehicle, the vehicle would be registered based on a field associated with the vehicle, whereas if a person would like to be able to identify a location such as their place of work, then the location would be registered based on a field associated with the vehicle. A more detailed discussion of registration will now be provided with additional reference to FIGS. **4-11**.

FIG. **4** illustrates an example device **402** for identifying an item or a location in accordance with aspects of the present invention.

FIG. **4** includes a device **402**, a database **404**, a field **406** and a network **408**. In this example embodiment, device **402** and database **404** are distinct elements. However, in some embodiments, device **402** and database **404** may be a unitary device as indicated by dotted line **410**.

Device **402** includes a field-detecting component **412**, an input component **414**, an accessing component **416**, a comparing component **418**, an identifying component **420**, a parameter-detecting component **422**, a communication component **424**, a verification component **426** and a controlling component **428**.

In this example, field-detecting component **412**, input component **414**, accessing component **416**, comparing component **418**, identifying component **420**, parameter-detecting component **422**, communication component **424**, verification component **426** and controlling component **428** are illustrated as individual devices. However, in some embodiments, at least two of field-detecting component **412**, input component **414**, accessing component **416**, comparing component **418**, identifying component **420**, parameter-detecting component **422**, communication component **424**, verification component **426** and controlling component **428** may be combined as a unitary device. Further, in some embodiments, at least one of field-detecting component **412**, input component **414**, accessing component **416**, comparing component **418**, identifying component **420**, parameter-detecting component **422**, communication component **424**, verification component **426** and controlling component **428** may be implemented as a computer having tangible computer-readable media for carrying or having computer-executable instructions or data structures stored thereon. Such tangible computer-readable media can be any available media that can be accessed by a general purpose or special purpose computer. Non-limiting examples of tangible computer-readable media include physical storage and/or memory media such as RAM, ROM, EEPROM, CD-ROM or other optical disk storage, magnetic disk storage or other magnetic storage devices, or any other medium which can be used to carry or store desired program code means in the form of computer-executable instructions or data structures and which can be accessed by a general purpose or special purpose computer. For information transferred or provided over a network or another communications connection (either hardwired, wireless, or a combination of hardwired or wireless) to a computer, the computer may properly view the connection as a computer-readable medium. Thus, any such connection may be properly termed a computer-readable medium. Combinations of the above should also be included within the scope of computer-readable media.

Controlling component **428** is arranged to communicate with: field-detecting component **412** via a communication line **430**; input component **414** via a communication line **432**; accessing component **416** via a communication line **434**; comparing component **418** via a communication line **436**; identifying component **420** via a communication line **438**; parameter-detecting component **422** via a communication line **440**; communication component **424** via a communication line **442**; and verification component **426** via a communication line **444**. Controlling component **428** is operable to control each of field-detecting component **412**, input component **414**, accessing component **416**, comparing component **418**, identifying component **420**, parameter-detecting component **422**, communication component **424** and verification component **426**.

Field-detecting component **412** is additionally arranged to detect field **406**, to communicate with input component **414** via a communication line **446**, to communicate with comparing component **418** via a communication line **448** and to communicate with parameter-detecting component **422** via a communication line **445**. Field-detecting component **412** may be any known device or system that is operable to detect a field, non-limiting examples of which include an electric field, a magnetic field, and electro-magnetic field and combinations thereof. In some non-limiting example embodiments, field-detecting component **412** may detect the amplitude of a field at an instant of time. In some non-limiting example embodiments, field-detecting component **412** may detect a field vector at an instant of time. In some non-limiting example embodiments, field-detecting component **412** may detect the amplitude of a field as a function over a period of time. In some non-limiting example embodiments, field-detecting component **412** may detect a field vector as a function over a period of time. In some non-limiting example embodiments, field-detecting component **412** may detect a change in the amplitude of a field as a function over a period of time. In some non-limiting example embodiments, field-detecting component **412** may detect a change in a field vector as a function over a period of time.

Input component **414** is additionally arranged to communicate with database **404** via a communication line **450** and to communicate with verification component **426** via a communication line **452**. Input component **414** may be any known device or system that is operable to input data into database **404**. Non-limiting examples of input component **414** include a graphic user interface (GUI) having a user interactive touch screen or keypad.

Accessing component **416** is additionally arranged to communicate with database **404** via a communication line **454** and to communicate with comparing component **418** via a communication line **456**. Accessing component **416** may be any known device or system that access data from database **404**.

Comparing component **418** is additionally arranged to communicate with identifying component **420** via a communication line **458**. Comparing component **418** may be any known device or system that is operable to compare two inputs.

Parameter-detecting component **422** is additionally arranged to communicate with identifying component **422** via a communication line **460**. Parameter-detecting component **422** may be any known device or system that is operable to detect a parameter, non-limiting examples of which include velocity, acceleration, angular velocity, angular acceleration, geodetic position, sound, temperature, vibrations, pressure, biometrics, contents of surrounding atmosphere and combinations thereof. In some non-limiting example embodiments, parameter-detecting component **422** may detect the amplitude of a parameter at an instant of time. In some non-limiting example embodiments, parameter-detecting component **422** may detect a parameter vector at an instant of time. In some non-limiting example embodiments, parameter-detecting component **422** may detect the amplitude of a parameter as a

function over a period of time. In some non-limiting example embodiments, parameter-detecting component **422** may detect a parameter vector as a function over a period of time. In some non-limiting example embodiments, parameter-detecting component **422** may detect a change in the amplitude of a parameter as a function over a period of time. In some non-limiting example embodiments, parameter-detecting component **422** may detect a change in a parameter vector as a function over a period of time.

Communication component **424** is additionally arranged to communicate with network **408** via a communication line **462**. Communication component **424** may be any known device or system that is operable to communicate with network **408**. Non-limiting examples of communication component include a wired and a wireless transmitter/receiver.

Verification component **426** may be any known device or system that is operable to provide a request for verification. Non-limiting examples of verification component **426** include a graphic user interface having a user interactive touch screen or keypad.

Communication lines **430**, **432**, **434**, **436**, **438**, **440**, **442**, **444**, **445**, **446**, **448**, **450**, **452**, **454**, **456**, **458**, **460** and **462** may be any known wired or wireless communication line.

Database **404** may be any known device or system that is operable to receive, store, organize and provide (upon a request) data, wherein the "database" refers to the data itself and supporting data structures. Non-limiting examples of database **404** include a memory hard-drive and a semiconductor memory.

Network **408** may be any known linkage of two or more communication devices. Non-limiting examples of database **408** include a wide-area network, a local-area network and the Internet.

For purposes of discussion, consider the example where a person is registering their vehicle. In some example embodiments, the vehicle may be registered based on an approach and entry into the vehicle as discussed above with reference to FIGS. **1**A-C. In some example embodiments, the vehicle may be registered based upon fields detected while the person using the device is within the vehicle. For purposes of discussion, consider the example where a person is registering their vehicle while sitting in the vehicle. In some example embodiments, the registration may be performed based upon fields detected while the vehicle is in a specific mode of operation, non-limiting examples of which include starting up, driving forward, driving in reverse, stopped, accelerating, decelerating and combinations thereof. For purposes of discussion, consider the following example where a person is registering their vehicle based on the starting up of the vehicle. This example will now be described with additional reference to FIG. **5**.

FIG. **5** illustrates an example method **500** of registering an item or a location in accordance with aspects of the present invention.

Method **500** starts (S**502**) and a field is detected (S**504**). For example, returning to FIG. **4**, field-detecting component **412** detects field **406**. For purposes of discussion, let field **406** be a magnetic field corresponding to the superposition of magnetic fields generated by all electronic and mechanical systems involved with the ignition of the vehicle. Some example detected field will now be described with greater detail with reference to FIGS. **6**-**8**.

FIG. **6** illustrates an example of measured magnetic fields associated with a specific vehicle in accordance with aspects of the present invention.

FIG. **6** includes a graph **602**, a graph **604**, a graph **606** and a graph **608**, each of which share a common x-axis **610** in units of seconds. Graph **602** has a y-axis in units of μT and includes a function **612**. Graph **604** has a y-axis in units of μT and includes a function **614**. Graph **606** has a y-axis in units of μT and includes a function **616**. Graph **608** has a y-axis in units of μT and includes a function **618**.

Function **612** corresponds to the absolute value of the magnitude of a magnetic field vector (B) of the vehicle. Function **614** corresponds to the magnitude of B in a z-direction relative to field-detecting component **412**. Function **616** corresponds to the magnitude of B in a y-direction relative to field-detecting component **412**. Function **618** corresponds to the magnitude of B in an x-direction relative to field-detecting component **412**.

A sudden change in the magnetic field manifests as spike **620** in function **612**, as spike **622** in function **614**, as spike **624** in function **616** and as spike **626** in function **618**. This spike may be indicative of an event. For purposes of discussion, let this sudden change in the magnetic field correspond to the ignition of a particular vehicle. In this example therefore, the vehicle may have a signature based on functions **612**, **614**, **616** and **618**, having tell-tail spikes **620**, **622**, **624** and **626**, respectively. These functions may be easily distinguished from signatures based on different events, as will now be described with reference to FIG. **7**.

FIG. **7** illustrates another example of measured magnetic fields associated with a second vehicle in accordance with aspects of the present invention.

FIG. **7** includes a graph **702**, a graph **704**, a graph **706** and a graph **708**, each of which share a common x-axis **710** in units of seconds. Graph **702** has a y-axis in units of μT and includes a function **712**. Graph **704** has a y-axis in units of μT and includes a function **714**. Graph **706** has a y-axis in units of μT and includes a function **716**. Graph **708** has a y-axis in units of μT and includes a function **718**.

Function **712** corresponds to the absolute value of the magnitude of a B of the second vehicle. Function **714** corresponds to the magnitude of B in a z-direction relative to field-detecting component **412**. Function **716** corresponds to the magnitude of B in a y-direction relative to field-detecting component **412**. Function **718** corresponds to the magnitude of B in an x-direction relative to field-detecting component **412**.

By comparing the overall magnitudes of the detected magnetic fields between FIG. **6** and FIG. **7** it is clear that the fields are associated with two different vehicles. However, there are additional differences between the detected fields worth noting. A change in the magnetic field of FIG. **7** manifests as a curve **720** in function **712**, as a curve **722** in function **714**, as a curve **724** in function **716** and as a spike **726** in function **718**. A commonality of each of these features is a rotation of the magnetic field, which may be indicative of an event. In this example, the relatively smooth transition of the magnetic field in more than one axis as shown in functions **714** and **716**, is indicative of a smooth movement of the detecting device within the detected magnetic field. For purposes of discussion, let this smooth change in the magnetic field correspond to the person, holding the device, entering a vehicle. Also noteworthy is a sudden change **728** in function **718**. This change which is detected in only one axis may be indicative of another event. For purposes of discussion, let this sudden change correspond to ignition of the vehicle. Therefore, in this example, the action of entering a specific vehicle and starting that specific vehicle may have a signature based on functions **712**, **714**, **716** and **718**.

FIG. **8** illustrates another example of measured magnetic fields associated with a third vehicle in accordance with aspects of the present invention.

FIG. **8** includes a graph **802**, a graph **804**, a graph **806** and a graph **808**, each of which share a common x-axis **810** in units of seconds. Graph **802** has a y-axis in units of μT and includes a function **812**. Graph **804** has a y-axis in units of μT and includes a function **814**. Graph **806** has a y-axis in units of μT and includes a function **816**. Graph **808** has a y-axis in units of μT and includes a function **818**.

Function **812** corresponds to the absolute value of the magnitude of a B of the third vehicle. Function **814** corresponds to the magnitude of B in a z-direction relative to field-detecting component **412**. Function **816** corresponds to the magnitude of B in a y-direction relative to field-detecting component **412**. Function **818** corresponds to the magnitude of B in an x-direction relative to field-detecting component **412**.

A sudden change in the magnetic field manifests as a curve **820** in function **812**, as a spike **822** in function **814**, as a spike **824** in function **816** and as a spike **826** in function **818**. A commonality of each of these features is a brief rotation of the magnetic field, which may be indicative of an event. In this example, the very brief rotation of the magnetic field in more than one axis, is indicative of a rotation the detecting device within the detected magnetic field. For purposes of discussion, let this quick change in the magnetic field correspond to the person, holding the device, entering a vehicle. Also noteworthy is a small bump **828** in function **812**, a small bump **830** in function **814** and a small bump **832** in function **816**. This small bump, which is detected in only two axes may be indicative of another event. For purposes of discussion, let this change correspond to ignition of the vehicle. Therefore, in this example, the action of entering a specific vehicle and starting that specific vehicle may have a signature based on functions **812**, **814**, **816** and **818**.

Returning to FIG. **5**, once the field is detected (S**504**), a signature is generated (S**506**). In some embodiments, for example as shown in FIG. **4**, field-detecting component **412** may generate a signature of the vehicle based any of functions **612**, **614**, **616**, **618** of FIG. **6**, and combinations thereof. In some embodiments, field-detecting component **412** may additionally process any of functions **612**, **614**, **616**, **618** and combinations thereof to generate such a signature. Non-limiting examples of further processes include averaging, adding, subtracting, and transforming any of functions **612**, **614**, **616**, **618** and combinations thereof.

Returning to FIG. **5**, once the signature is generated (S**506**), the signature in input into memory (S**508**). For example, as shown in FIG. **4**, field-detecting component **412** provides the signature to input component **414** via communication line **446**.

In an example embodiment, input component **414** includes a GUI that informs a user of device **402** that a signature has been generated. Input component **414** may additionally enable the user to input an association between and item or location and the generated signature. For example, input component **414** may display on a GUI a message such as "A signature was generated. To what item/location is the signature associated?" Input component **414** may then display an input prompt for the user to input, via the GUI, an item/location to be associated with the generated signature.

Input component **414** may then provide the signature, and the association to a specific item or location, to database **404** via communication line **450**.

As discussed above, in some embodiments, database **404** is part of device **402**, whereas in other embodiments, database **404** is separate from device **402**. Data input and retrieval from database **404** may be faster when database **404** part of device **402**, as opposed to cases where database **404** is distinct from device **402**. However, size may be a concern when designing device **402**, particularly when device **402** is intended to be a handheld device such as a smartphone. As such, device **402** may be much smaller when database **404** is distinct from device **402**, as opposed to cases where database **404** is part of device **402**.

Consider an example embodiment, where database **404** is part of device **402**. In such cases, input component **414** may enable a user to input signatures and the item/location associations, for a predetermined number of items/locations. In this manner, database **404** will only be used for device **402**.

Now consider an example embodiment, where database **404** is separate from device **402**. Further, let database **404** be much larger than the ease where database **404** is part of device **402**. Still further, let database **404** be accessible to other devices in accordance with aspects of the present invention. In such cases, input component **414** may enable a user to input signatures and the item/location associations, for a much larger predetermined number of items/locations. Further, in such cases, input component **414** may enable other users of similar devices to input signatures and the item/location associations, for even more items/locations.

An example embodiment may use the differentiating magnetic field properties between different vehicle types and makes to identify the different vehicle types and makes. Today's vehicles are fully equipped with electronic and mechanical actuators and switches, engine subsystems. All these subsystems are generating their own electromagnetic and magnetic fields and therefore will alter the overall three-dimensional properties and field strength fluctuations of the vehicle interior. Particularly the ignition of a vehicle generates a characteristic magnetic flux for every vehicle. Aspects of the present invention include a storing these field properties as signatures within database **404** through measurements in the near field within the vehicle interior for a reference group of make and models. As such, any user of a device may be able to identify a registered vehicle within database **404**. Thus, through previously stored signatures and additional measurements, the present invention enables a library of vehicular electromagnetic signatures. This library may be augmented with additional measurements describing the electromagnetic signatures of different vehicles. This will be described in greater detail later with reference to FIG. **13**.

At this point, method **500** stops (S**510**).

In the examples discussed above with respect to FIGS. **6-8**, field-detecting component **412** is detecting magnetic fields as field vectors as functions over a period of time. The detected signals illustrated in FIGS. **6-8** are easily distinguishable from one another. Accordingly, the vehicles associated therewith, respectively, may additionally be easily distinguishable from one another.

Returning to FIG. **5**, method **500** may involve the detection of additional parameters to associate with an item or location. Specifically, additional aspects of the present invention are drawn to a system and method for determining a specific item and/or location by utilizing: 1) field properties within and/or near the specific item and or location; and 2) additionally detected parameters. In one non-limiting example embodiment, a smartphone is used to measure a magnetic field associated with a vehicle, and to measure velocity and/acceleration whether the user of the smartphone is in an identified vehicle.

For example, returning to FIG. **4**, parameter-detecting component **422** may be used to detect another parameter for use in detecting the vehicle. For purposes of discussion, consider the example where a person is registering their vehicle based on the walking up to the vehicle, entering the vehicle

and starting up of the vehicle, wherein parameter-detecting component **422** measured various accelerations of the device as it is being carried by the person. This example will now be described with additional reference to FIGS. **9-11**.

FIG. **9** illustrates an example of measured magnetic fields and of measured acceleration associated with the device being carried in accordance with aspects of the present invention.

FIG. **9** includes graph **602**, graph **604**, graph **606** and graph **608**, in addition to a graph **902**, a graph **904**, a graph **906**, a graph **908**, a graph **910** and a graph **912**, each of which share a common x-axis **914** in units of seconds. FIG. **9** additionally includes a line **916**. Graph **902** has a y-axis in units of $m/s^2$ and includes a function **918**. Graph **904** has a y-axis in units of $m/s^2$ and includes a function **920**. Graph **906** has a y-axis in units of $m/s^2$ and includes a function **922**. Graph **908** has a y-axis in units of degrees and includes a function **924**. Graph **910** has a y-axis in units of degrees and includes a function **926**. Graph **912** has a y-axis in units of degrees and includes a function **928**.

Function **918** corresponds to the acceleration in a z-direction relative to parameter-detecting component **422**. Function **920** corresponds to the acceleration in a y-direction relative to parameter-detecting component **422**. Function **922** corresponds to the acceleration in an x-direction relative to parameter-detecting component **422**. Function **924** corresponds to the angular acceleration in a yaw direction relative to parameter-detecting component **422**. Function **926** corresponds to the angular acceleration in a pitch direction relative to parameter-detecting component **422**. Function **928** corresponds to the angular acceleration in a roll direction relative to parameter-detecting component **422**.

As noted, function **920**, the acceleration in the y-direction, changes dramatically. This corresponds to the up and down motion of a person walking. Further, a spike **930** corresponds to motion of the person sitting into the vehicle. A second spike **932** corresponds to the large vibration coincident with starting of the vehicle. As discussed above, spikes **620**, **622**, **624** and **626** correspond to the detected magnetic field associated with ignition of the vehicle. Now these two separate parameters may be analyzed together to more clearly identify an event. In this example, a person is walking to, entering and starting a vehicle. As shown in each of functions **918**, **920** and **922**, the dramatic variations in detected acceleration in each axis (after the vehicle has been started as evidenced by the spikes in the detected magnetic fields of functions **612**, **614**, **616** and **618**) may be explained by way of the vibrations of the vehicle now that it is running. This is particularly telling by function **918**, or the acceleration in the z-axis (toward the vehicle). As the person is walking toward the vehicle, the constant walking velocity registers as no change in acceleration in this axis. However, after the vehicle is started, which shows as spike **934** in function **918**, acceleration changes in the z-axis as a result of the vehicle vibrating from the engine.

Functions **924**, **926** and **928** are shown here as further non-limiting examples of additional parameters that may be detected for use to identify a vehicle or location. In this example however, it should be noted that functions **928** includes a spike **936**. This spike in the "roll" rotational axis is indicative that the device is being rolled, which may correspond to the phone being in the user's hand when entering the vehicle. This further supports the notion that a person is entering a vehicle. This, evidence in conjunction with the magnetic and acceleration signatures may be used to accurately identify the vehicle.

The additionally detected parameter, in the above example of FIG. **9**, reduces the likelihood of false positive identification of a vehicle with only a magnetic signature. In accordance with aspects of the present invention, the use of additional parameter signatures may provide evidence to correctly identify a vehicle—or if the case may be—correctly identify a location.

In some embodiments, parameter-detecting component **422** may generate an output associated with the vehicle based any of functions **918**, **920**, **922**, **924**, **926**, **928** and combinations thereof. In some embodiments, parameter-detecting component **422** may additionally process any of functions **918**, **920**, **922**, **924**, **926**, **928** and combinations thereof to generate such an output. Non-limiting examples of further processes include averaging, adding, subtracting, and transforming any of functions **918**, **920**, **922**, **924**, **926**, **928** and combinations thereof. In any of these embodiments, field-detecting component **412** may then generate a signature of the vehicle based any of functions **612**, **614**, **616**, **618** and combinations thereof and based on the output generated by parameter-detecting component **422**.

FIG. **10** illustrates another example of measured magnetic fields and of measured acceleration associated with a vehicle in accordance with aspects of the present invention.

FIG. **10** includes graph **702**, graph **704**, graph **706** and graph **708**, in addition to a graph **1002**, a graph **1004**, a graph **1006**, a graph **1.008**, a graph **1010** and a graph **1012**, each of which share a common x-axis **1014** in units of seconds. FIG. **10** additionally includes a line **1016**. Graph **1002** has a y-axis in units of $m/s^2$ and includes a function **1018**. Graph **1004** has a y-axis in units of $m/s^2$ and includes a function **1020**. Graph **1006** has a y-axis in units of $m/s^2$ and includes a function **1022**. Graph **1008** has a y-axis in units of degrees and includes a function **1024**. Graph **1010** has a y-axis in units of degrees and includes a function **1026**. Graph **1012** has a y-axis in units of degrees and includes a function **1028**.

Function **1018** corresponds to the acceleration in a z-direction relative to parameter-detecting component **422**. Function **1020** corresponds to the acceleration in a y-direction relative to parameter-detecting component **422**. Function **1022** corresponds to the acceleration in an x-direction relative to parameter-detecting component **422**. Function **1024** corresponds to the angular acceleration in a yaw direction relative to parameter-detecting component **422**. Function **1026** corresponds to the angular acceleration in a pitch direction relative to parameter-detecting component **422**. Function **1028** corresponds to the angular acceleration in a roll direction relative to parameter-detecting component **422**.

As discussed above with reference to FIGS. **6-7**, by comparing the overall magnitudes of the detected magnetic fields between FIG. **9** and FIG. **10**, it is clear that the fields are associated with two different vehicles. However, there are additional differences between the detected parameters worth noting. As noted by functions **1018**, **1020** and **1022**, the acceleration changes very little until changes in the detected magnetic field as noted by **720**, **724**, **728** and **732**. At this point in time, as evidenced by variations **1030**, **1032** and **1034**, the acceleration-detecting component is "jostled" in all three axes. This corresponds to the relatively constant motion of a person walking, followed by the person entering the vehicle. Furthermore, as noted by function **1024**, **1026** and **1028** there is a generally constant yaw pitch and roll until the changes in the detected magnetic field as noted by **720**, **724**, **728** and **732**. At this point in time, as evidenced by double variations **1036**, **1038** and **1040**, the rotation-detecting component is "spun" in all three axes. These signatures, in conjunction with the relatively low acceleration as noted in functions **1018**, **1020** and **1022**, may be explained by the device being carried in a purse, for example. In such a case, being carried in a purse would

buffer changes in acceleration, which is reflected in the relatively calm functions **1018**, **1020** and **1022**. When the person enters the vehicle and the purse is spun around and place in a seat, double variations **1036**, **1038** and **1040** may result. This is further evidenced by the lack of acceleration or movement detected in any of functions **1018**, **1020**, **1022**, **1024**, **1026** and **1028** after entering the vehicle.

In some embodiments, parameter-detecting component **422** may generate an output associated with the vehicle based any of functions **1018**, **1020**, **1022**, **1024**, **1026**, **1028** and combinations thereof. In some embodiments, parameter-detecting component **422** may additionally process any of functions **1018**, **1020**, **1022**, **1024**, **1026**, **1028** and combinations thereof to generate such an output. Non-limiting examples of further processes include averaging, adding, subtracting, and transforming any of functions **1018**, **1020**, **1022**, **1024**, **1026**, **1028** and combinations thereof. In any of these embodiments, field-detecting component **412** may then generate a signature of the vehicle based any of functions **612**, **614**, **616**, **618** and combinations thereof and based on the output generated by parameter-detecting component **422**.

FIG. **11** illustrates another example of measured magnetic fields and of measured acceleration associated with a vehicle in accordance with aspects of the present invention.

FIG. **11** includes graph **802**, graph **804**, graph **806** and graph **808**, in addition to a graph **1102**, a graph **1104**, a graph **1106**, a graph **1108**, a graph **1110** and a graph **1112**, each of which share a common x-axis **1114** in units of seconds. FIG. **11** additionally includes a line **1116**. Graph **1102** has a y-axis in units of $m/s^2$ and includes a function **1118**. Graph **1104** has a y-axis in units of $m/s^2$ and includes a function **1120**. Graph **1106** has a y-axis in units of $m/s^2$ and includes a function **1122**. Graph **1108** has a y-axis in units of degrees and includes a function **1124**. Graph **1110** has a y-axis in units of degrees and includes a function **1126**. Graph **1112** has a y-axis in units of degrees and includes a function **1128**.

Function **1118** corresponds to the acceleration in a z-direction relative to parameter-detecting component **422**. Function **1120** corresponds to the acceleration in a y-direction relative to parameter-detecting component **422**. Function **1122** corresponds to the acceleration in an x-direction relative to parameter-detecting component **422**. Function **1124** corresponds to the angular acceleration in a yaw direction relative to parameter-detecting component **422**. Function **1126** corresponds to the angular acceleration in a pitch direction relative to parameter-detecting component **422**. Function **1128** corresponds to the angular acceleration in a roll direction relative to parameter-detecting component **422**.

By comparing the overall magnitudes of the detected magnetic fields between FIGS. **9-11**, it is clear that the fields are associated with different vehicles. However, there are additional differences between the detected parameters worth noting. As noted by fluctuations **1130**, **1132** and **1134** of functions **1118**, **1120** and **1122**, respectively, the acceleration changes drastically in correspondence with changes in the detected magnetic field as noted by **820**, **822**, **824** and **826**. As discussed above, with reference to FIG. **8**, this corresponds to entry into the vehicle. Further, as noted by spikes **1136**, **1138** and **1140** of functions **1118**, **1120** and **1122**, respectively, the acceleration changes drastically in correspondence with changes in the detected magnetic field as noted by **828**, **830** and **832**. As discussed above, with reference to FIG. **8**, this ignition of the vehicle. At this point in time, as evidenced by spikes **1136**, **1138** and **1140**, the acceleration detecting component is "jostled" in all three axes.

Furthermore, as noted by function **1124**, **1126** and **1128** there is a generally constant yaw pitch and roll until the changes in the detected magnetic field as noted by **820**, **822**, **824** and **826**. At this point in time, as evidenced by changes **1142**, **1144** and **1146**, the rotation-detecting component is "spun" in all three axes as a result of the person entering the vehicle. Then the yaw pitch and roll remain constant for a period indicated by portions **1148**, **1150** and **1152** of functions **1124**, **1126** and **1128**, respectively. These signatures may be explained by the user setting the device down into one position after the entering the vehicle. At this point in time, as evidenced by changes **1142**, **1144** and **1146**, the rotation-detecting component is "spun" in all three axes as a result of the person entering the vehicle. Then the yaw pitch and roll again change as indicated by portions **1154**, **1156** and **1158** of functions **1124**, **1126** and **1128**, respectively. These signatures may be explained by the person moving the device.

In some embodiments, parameter-detecting component **422** may generate an output associated with the vehicle based any of functions **1118**, **1120**, **1122**, **1124**, **1126**, **1128** and combinations thereof. In some embodiments, parameter-detecting component **422** may additionally process any of functions **1118**, **1120**, **1122**, **1124**, **1126**, **1128** and combinations thereof to generate such an output. Non-limiting examples of further processes include averaging, adding, subtracting, and transforming any of functions **1118**, **1120**, **1122**, **1124**, **1126**, **1128** and combinations thereof. In any of these embodiments, field-detecting component **412** may then generate a signature of the vehicle based any of functions **612**, **614**, **616**, **618** and combinations thereof and based on the output generated by parameter-detecting component **422**.

In the examples discussed above with respect to FIGS. **9-11**, just as with the examples discussed above with respect to FIGS. **6-8**, the detected magnetic signals are easily distinguishable from one another. Accordingly, the vehicles associated therewith, respectively, may additionally be easily distinguishable from one another. However, in situations where the magnetic field signatures may be somewhat similar, it may be more difficult for a device in accordance with aspects of the present invention to distinguish vehicles—solely on the detected magnetic (or electric or electro-magnetic) fields. As such, the use of further distinguishing with at least a second detected parameter may help distinguish the vehicles.

In the examples discussed above with respect to FIGS. **9-11**, parameter-detecting component **422** is detecting acceleration vectors as functions over a period of time. The detected acceleration signals illustrated in FIGS. **9-11** are easily distinguishable from one another. Accordingly, even if such vehicles had similar magnetic signatures, the vehicles associated with the detected acceleration signals, respectively, may additionally be easily distinguishable from one another.

The above discussed examples of FIGS. **9-11** are merely provided for purposes of explanation and are not limiting. Clearly, any other type of detectable parameter may be used to additionally distinguish an item or location in accordance with aspects of the present invention.

It should be noted that the detected fields and parameters in the examples discussed above with reference to FIGS. **6-11** are non-limiting examples. Each vehicle may have a distinct signature, just as each person may have a unique gait that will register a unique acceleration signature. An aspect of the present invention is the recording of a field signature, and in some cases an additional parameter signature, for future use to detect a vehicle or location.

In an example embodiment, field-detecting component **412** may detect magnetic field vectors associated with the approach and entry into vehicle **102**, for example as discussed above with reference to FIGS. **1**A-C, whereas parameter-

detecting component **422** may detect three dimensional acceleration associated with the gait of person **104**, the motion of person **104** opening door **108** and the motion of person **104** sitting in vehicle **102**. An overall signature may be generated based on the signatures generated from each of field-detecting component **412** and parameter-detecting component **422**.

In another example embodiment, field-detecting component **412** may detect magnetic field vectors associated the inside of vehicle **102** while it is operating, whereas parameter-detecting component **422** may detect ambient noise associated with the running engine and road noise associated with vehicle **102** while it is operating. An overall signature may be generated based on the signatures generated from each of field-detecting component **412** and parameter-detecting component **422**.

Returning to FIG. **3**, after the item or location has been registered (S**304**), an item or location is detected (S**306**). For example, the next time the person approaches a vehicle, a device in accordance with aspects of the present invention would detect a field associated with the vehicle. Similarly, for example, the next time the person approaches a location, a device in accordance with aspects of the present invention would detect a field associated with the location. A more detailed discussion of registration will now be provided with additional reference to FIG. **12**.

FIG. **12** illustrates an example method **1200** of detecting an item or a location in accordance with aspects of the present invention.

Method **1200** starts (S**1202**) and a field is detected (S**1204**). This is the same as the field being detected (S**504**) as discussed above with reference to method **500**. For example, returning to FIG. **4**, field-detecting component **412** detects a new field. For purposes of discussion, let the new field be a magnetic field corresponding to the superposition of magnetic fields generated by all electronic and mechanical systems involved with the ignition of a vehicle.

Returning to FIG. **12**, once the field is detected (S**1204**), a signature is generated (S**1206**). This is similar to the signature being generated (S**506**) as discussed above with reference to method **500**. In some embodiments, for example as shown in FIG. **4**, field-detecting component **412** may generate a signature of the vehicle based any of functions **612**, **614**, **616**, **618** of FIG. **6**, and combinations thereof. In some embodiments, field-detecting component **412** may additionally process any of functions **612**, **614**, **616**, **618** and combinations thereof to generate such a signature. Non-limiting examples of further processes include averaging, adding, subtracting, and transforming any of functions **612**, **614**, **616**, **618** and combinations thereof.

This second signature is provided to comparing component **418** via communication line **448**.

At this point, method **1200** stops (S**1208**).

Returning to FIG. **3**, after the item or location has been detected (S**306**), it is verified (S**308**). For example, a device in accordance with aspects of the present invention would determine whether the newly detected vehicle is the vehicle that was previously registered. Similarly, a device in accordance with aspects of the present invention would determine whether the newly detected location is the location that was previously registered. A more detailed discussion of registration will now be provided with additional reference to FIG. **13**.

FIG. **13** illustrates an example method **1300** of verifying an item or a location in accordance with aspects of the present invention.

Method **1300** starts (S**1302**) and the previously stored signature is accessed (S**1304**). For example, as shown in FIG. **4**, access component **416** retrieves the previously-stored signature from database **404** via communication line **454**. Access component **416** then provides the retrieved, previously-stored signature to comparator **418** via communication line **456**.

Returning to FIG. **13**, now that the previously stored signature has been accessed (S**1304**), the signatures are compared (S**1306**). For example, as shown in FIG. **4**, comparator **418** compares the retrieved, previously stored signature as provided by access component **416** with the newly generated signature as provided by field-detecting component **412**.

Returning to FIG. **13**, now that the signatures have been compared (S**1306**), the item/location may be identified (S**1308**). For example, as shown in FIG. **4**, comparator **418** provides an output to identifying component **420** via communication line **458**. If the retrieved, previously stored signature as provided by access component **416** matches the newly generated signature as provided by field-detecting component **412**, then the newly detected item/location is the same item/location that was previously registered. In such a case, identifying component **420** may indicate that the newly detected item/location is the same item/location that was previously registered. If the retrieved, previously stored signature as provided by access component **416** does not match the newly generated signature as provided by field-detecting component **412**, then the newly detected item/location is not the same item/location that was previously registered. In such a case, identifying component **420** may indicate that the newly detected item/location is the same item/location that was previously registered.

At this point, method **1300** stops (S**1310**).

Returning to FIG. **3**, after the item or location has been verified, the data is updated (S**310**). For example, in some embodiments, as shown in FIG. **4**, comparator **418** may determine that the previously stored signature as provided by access component **416** does not exactly match the newly generated signature as provided by field-detecting component **412**, but the difference between the previously stored signature as provided by access component **416** does not exactly match the newly generated signature as provided by field-detecting component **412** is within a predetermined acceptable limit. In such cases, identifying component **420** may indicate that the newly detected item/location is still the same item/location that was previously registered. Further, comparator **418** may provide the newly generated signature as provided by field-detecting component **41.2** to access component **416** via communication line **456**. Access component **416** may then provide the newly generated signature to database **404** via communication line **454**.

In this manner, database **404** may be "taught" to accept variations of previously registered signatures. In some embodiments, an average of recognized signatures may be stored for future use. In some embodiments, a plurality of each recognized signature may be stored for future use.

Returning to FIG. **3**, device **402** waits to detect a new field (S**306**).

The example embodiments discussed above are drawn to identifying an item or location using fields associated therewith. Once identified, other functions may be available. For example, consider the situation wherein a device in accordance with aspects of the present invention is embodied in a smartphone. In such an example, once an item (e.g., a vehicle) or a location (e.g., a house) is identified, the smartphone may institute a suite of applications and turn off other applications. In a specific example embodiment, the identification of a vehicle may be used to place a smartphone in a "Vehicle

Mode," wherein the smartphone will operate in a particular manner because it is determined to be in a vehicle.

In accordance with aspects of the present invention discussed above, the sensors and functionalities of smartphones can be used to supplement or even replace the known vehicle-based techniques of vehicle telematics. More specifically, smartphone-to-smartphone (when both phones are in Vehicle Mode), smartphone-to-infrastructure and infrastructure-to-smartphone communications (again, when the smartphone is in Vehicle Mode) can provide drivers with a wide range of telematics services and features, while resulting in little or no additional cost to the vehicle driver (because she likely already has a smartphone) or the vehicle manufacturer (because it doesn't have to provide the purchaser of the vehicle with a smartphone and also doesn't have to embed costly vehicle telematics equipment in the vehicle). To be able to do so, however, the smartphone again has to be able to "know" that it is in Vehicle Mode and be able to determine in what vehicle it is. Ideally for various applications it is necessary to be able to determine if the smartphone is in the vehicle that is owned by the smartphone user. Aspects of the present invention enable a smartphone to know that it is in Vehicle Mode based on detected magnetic, electric, magneto-electric fields and combinations thereof.

Further in accordance with the present invention, a smartphone may utilize its magnetometer function to periodically measure the electromagnetic levels sensed at the smartphone's current location. The smartphone uses its processing capabilities to try to map the periodic electromagnetic levels sensed by the smartphone with the vehicular electromagnetic signatures stored in library. If the periodic electromagnetic levels sensed by the smartphone match any of the specific vehicle signatures stored in the library, then the processor of the smartphone may generate and/or otherwise output a signal indicating that the smartphone is located in the specific vehicle, which in turn will be used by the Vehicle Mode detection method to trigger certain functions.

The Vehicle Mode relevant sensor suite may be monitored at intervals depending on detected speed and location, for example, up to several times per second. The magneto metric sensor output may be monitored dependent on the accelerometer output as this will indicate a movement of the phone either within the vehicle environment or of the vehicle itself.

In the drawings and specification, there have been disclosed embodiments of the invention and, although specific terms are employed, they are used in a generic and descriptive sense only and not for purposes of limitation, the scope of the invention being set forth in the following claims.

What is claimed as new and desired to be protected by Letters Patent of the United States is:

**1**. A device, for use with a database, said device comprising:

a field-detecting component operable to detect at least one of an electric field, a magnetic field and an electro-magnetic field and to generate a detected field signature based on the detected one of an electric field, a magnetic field and an electro-magnetic field;

an input component operable to input the detected field signature into the database;

an accessing component operable to access the detected field signature from the database;

a comparing component operable to generate a comparison signal; and

an identifying component operable to identify one of an item and a location based on the comparison signal,

wherein said field-detecting component is further operable to detect a second one of an electric field, a magnetic field and an electro-magnetic field and to generate a second detected field signature based on the detected second one of an electric field, a magnetic field and an electro-magnetic field, and

wherein said comparing component is operable to generate the comparison signal based on a comparison of the detected field signature and the second detected field signature.

**2**. The device of claim **1**, wherein said field-detecting component is operable to detect the at least one of an electric field, a magnetic field and an electro-magnetic field as a function over a period of time.

**3**. The device of claim **1**, further comprising:

a parameter-detecting component operable to detect a parameter and to generate a parameter signal based on the detected parameter,

wherein said identifying component is operable to identify the one of an item and a location based additionally on the parameter signal.

**4**. The device of claim **3**, wherein said parameter-detecting component is operable to detect, as the parameter, one of the group consisting of a velocity, acceleration, angular velocity, angular acceleration, geodetic position, sound, temperature, vibrations, pressure, biometrics, contents of surrounding atmosphere and combinations thereof.

**5**. The device of claim **1**, further comprising a communication component operable to wirelessly communicate with a network.

**6**. The device of claim **1**,

wherein said field-detecting component is operable to detect a magnetic field,

wherein said input component is further operable to input an association between a vehicle and the detected magnetic field,

wherein said field-detecting component is further operable to detect a second magnetic field and to generate a second detected field signature based on the detected second magnetic field, and

wherein said identifying component is further operable, based on the association, to identify the vehicle as the item.

**7**. The device of claim **6**, further comprising:

a verification component operable to provide a request for verification based on the comparison signal and the association,

wherein said input component is further operable to input a verification based on the request for verification.

**8**. A method, for use with a database, said method comprising:

detecting, via a field-detecting component, at least one of an electric field, a magnetic field and an electro-magnetic field;

generating, via the field-detecting component, a detected field signature based on the detected one of an electric field, a magnetic field and an electro-magnetic field;

inputting, via an input component, the detected field signature into the database;

accessing, via an accessing component, the detected field signature from the database;

generating, via a comparing component, a comparison signal;

identifying, via an identifying component, one of an item and a location based on the comparison signal;

detecting, via the field-detecting component, a second one of an electric field, a magnetic field and an electro-magnetic field; and

generating, via the field-detecting component, a second detected field signature based on the detected second one of an electric field, a magnetic field and an electro-magnetic field,

wherein said generating a comparison signal comprises generating the comparison signal based on a comparison of the detected field signature and the second detected field signature.

**9**. The method of claim **8**, wherein said detecting comprises detecting the at least one of an electric field, a magnetic field and an electro-magnetic field as a function over a period of time.

**10**. The method of claim **8**, further comprising:

detecting, via a parameter-detecting component, a parameter; and

generating, via the parameter-detecting component, a parameter signal based on the detected parameter,

wherein said identifying comprises identifying the one of an item and a location based additionally on the parameter signal.

**11**. The method of claim **10**, wherein said detecting a parameter comprises detecting, as the parameter, one of the group consisting of a velocity, acceleration, angular velocity, angular acceleration, geodetic position, sound, temperature, vibrations, pressure, biometrics, contents of surrounding atmosphere and combinations thereof.

**12**. The method of claim **8**, further comprising wirelessly communicating, via a communication component, with a network.

**13**. The method of claim **8**, further comprising:

inputting, via the input component is further operable to input an association; and

identifying, via the identifying component, a vehicle,

wherein said detecting, via a field-detecting component, at least one of an electric field, a magnetic field and an electro-magnetic field comprises detecting detect a magnetic field,

wherein said inputting an association comprises inputting an association between a vehicle and the detected magnetic field,

wherein said detecting a second one of an electric field, a magnetic field and an electro-magnetic field comprises detecting a second magnetic field,

wherein said generating a second detected field signature comprises generating a second detected field signature based on the detected second magnetic field, and

wherein said identifying a vehicle comprises identifying, based on the association, the vehicle as the item.

**14**. The method of claim **13**, further comprising:

providing, via a verification component, operable to provide a request for verification based on the comparison signal and the association; and

inputting, via the input component, a verification based on the request for verification.

**15**. A non-transitory, tangible, computer-readable media having computer-readable instructions stored thereon, for use with a database, the computer-readable instructions being capable of being read by a computer and being capable of instructing the computer to perform the method comprising:

detecting, via a field-detecting component, at least one of an electric field, a magnetic field and an electro-magnetic field;

generating, via the field-detecting component, a detected field signature based on the detected one of an electric field, a magnetic field and an electro-magnetic field;

inputting, via an input component, the detected field signature into the database;

accessing, via an accessing component, the detected field signature from the database;

generating, via a comparing component, a comparison signal;

identifying, via an identifying component, one of an item and a location based on the comparison signal;

detecting, via the field-detecting component, a second one of an electric field, a magnetic field and an electro-magnetic field; and

generating, via the field-detecting component, a second detected field signature based on the detected second one of an electric field, a magnetic field and an electro-magnetic field,

wherein said generating a comparison signal comprises generating the comparison signal based on a comparison of the detected field signature and the second detected field signature.

**16**. The non-transitory, tangible, computer-readable media of claim **15**, wherein the computer-readable instructions are capable of instructing the computer to perform the method such that said detecting comprises detecting the at least one of an electric field, a magnetic field and an electro-magnetic field as a function over a period of time.

**17**. The non-transitory, tangible, computer-readable media of claim **15**, the computer-readable instructions being capable of being read by a computer and being capable of instructing the computer to perform the method further comprising:

detecting, via a parameter-detecting component, a parameter; and

generating, via the parameter-detecting component, a parameter signal based on the detected parameter,

wherein said identifying comprises identifying the one of an item and a location based additionally on the parameter signal.

**18**. The non-transitory, tangible, computer-readable media of claim **17**, wherein the computer-readable instructions are capable of instructing the computer to perform the method such that said detecting a parameter comprises detecting, as the parameter, one of the group consisting of a velocity, acceleration, angular velocity, angular acceleration, geodetic position, sound, temperature, vibrations, pressure, biometrics, contents of surrounding atmosphere and combinations thereof.

**19**. The non-transitory, tangible, computer-readable media of claim **15**, the computer-readable instructions being capable of being read by a computer and being capable of instructing the computer to perform the method further comprising wirelessly communicating, via a communication component, with a network.

**20**. The non-transitory, tangible, computer-readable media of claim **15**, the computer-readable instructions being capable of instructing the computer to perform the method further comprising:

inputting, via the input component is further operable to input an association; and

identifying, via the identifying component, a vehicle,

wherein said detecting, via a field-detecting component, at least one of an electric field, a magnetic field and an electro-magnetic field comprises detecting detect a magnetic field,

wherein said inputting an association comprises inputting an association between a vehicle and the detected magnetic field,

wherein said detecting a second one of an electric field, a magnetic field and an electro-magnetic field comprises detecting a second magnetic field,

wherein said generating a second detected field signature comprises generating a second detected field signature based on the detected second magnetic field, and

wherein said identifying a vehicle comprises identifying, based on the association, the vehicle as the item.

**21**. The non-transitory, tangible, computer-readable media of claim **20**, the computer-readable instructions being capable of instructing the computer to perform the method further comprising:

providing, via a verification component, operable to provide a request for verification based on the comparison signal and the association; and

inputting, via the input component, a verification based on the request for verification.

**22**. A device, for use with a database having stored therein, at least one of a first plurality of signatures, a second plurality of signatures and a third plurality of signatures, the first plurality of signatures corresponding to a plurality of electric fields, respectively, the second plurality of signatures corresponding to a plurality of magnetic fields, respectively, the third plurality of signatures corresponding to a plurality of electro-magnetic fields, respectively, said device comprising:

an accessing component operable to access one of the first plurality of signatures, the second plurality of signatures and the third plurality of signatures from the database;

a field-detecting component operable to detect at least one of an electric field, a magnetic field and an electro-magnetic field and to generate a detected field signature based on the detected one of said fields;

a comparing component operable to generate a comparison signal; and

an identifying component operable to identify one of an item and a location based on the comparison signal,

wherein, when said field-detecting component is operable to detect an electric field, said comparison component is operable to generate the comparison signal based on a comparison of the detected field signature and the first plurality of signatures,

wherein, when said field-detecting component is operable to detect a magnetic field, said comparison component is operable to generate the comparison signal based on a comparison of the detected field signature and the second plurality of signatures, and

wherein, when said field-detecting component is operable to detect an electro-magnetic field, said comparison component is operable to generate the comparison signal based on a comparison of the detected field signature and the third plurality of signatures.

**23**. The device of claim **22**, wherein said field-detecting component is operable to detect the at least one of an electric field, a magnetic field and an electro-magnetic field as a function over a period of time.

**24**. The device of claim **22**, further comprising:

a parameter-detecting component operable to detect a parameter and to generate a parameter signal based on the detected parameter,

wherein said identifying component is operable to identify the one of an item and a location based additionally on the parameter signal.

**25**. The device of claim **24**, wherein said parameter-detecting component is operable to detect, as the parameter, one of the group consisting of a velocity, acceleration, angular velocity, angular acceleration, geodetic position, sound, temperature, vibrations, pressure, biometrics, contents of surrounding atmosphere and combinations thereof.

**26**. The device of claim **22**, further comprising a communication component, operable to wirelessly communicate with a network.

**27**. The device of claim **22**,

wherein said field-detecting component is operable to detect a magnetic field,

wherein said input component is further operable to input an association between a vehicle and the detected magnetic field,

wherein said field-detecting component is further operable to detect a second magnetic field and to generate a second detected field signature based on the detected second magnetic field, and

wherein said identifying component is further operable, based on the association, to identify the vehicle as the item.

**28**. The device of claim **27**, further comprising:

a verification component operable to provide a request for verification based on the comparison signal and the association,

wherein said input component is further operable to input a verification based on the request for verification.

**29**. A method, for use with a database having stored therein, at least one of a first plurality of signatures, a second plurality of signatures and a third plurality of signatures, the first plurality of signatures corresponding to a plurality of electric fields, respectively, the second plurality of signatures corresponding to a plurality of magnetic fields, respectively, the third plurality of signatures corresponding to a plurality of electro-magnetic fields, respectively, said method comprising:

accessing, via an accessing component, one of the first plurality of signatures, the second plurality of signatures and the third plurality of signatures from the database;

detecting, via a field-detecting component, at least one of an electric field, a magnetic field and an electro-magnetic field;

generating, via a field-detecting component, a detected field signature based on the detected one of an electric field, a magnetic field and an electro-magnetic field;

generating, via a comparing component, a comparison signal; and

identifying, via an identifying component, one of an item and a location based on the comparison signal,

wherein, when said detecting comprises detecting an electric field, said generating comprises generating the comparison signal based on a comparison of the detected field signature and the first plurality of signatures,

wherein, when said detecting comprises detecting a magnetic field, said generating comprises generating the comparison signal based on a comparison of the detected field signature and the second plurality of signatures, and

wherein, when said detecting comprises detecting an electro-magnetic field, said generating comprises generating the comparison signal based on a comparison of the detected field signature and the third plurality of signatures.

**30**. The method of claim **29**, wherein said detecting comprises detecting the at least one of an electric field, a magnetic field and an electro-magnetic field as a function over a period of time.

**31**. The method of claim **29**, further comprising:

detecting, via a parameter-detecting component, a parameter; and

generating, via the parameter-detecting component, a parameter signal based on the detected parameter,

wherein said identifying comprises identifying the one of an item and a location based additionally on the parameter signal.

**32**. The method of claim **31**, wherein said detecting a parameter comprises detecting, as the parameter, one of the group consisting of velocity, acceleration, angular velocity, angular acceleration, geodetic position, sound, temperature, vibrations, pressure, biometrics, contents of surrounding atmosphere and combinations thereof.

**33**. The method of claim **29**, further comprising wirelessly communicating, via a communication component, with a network.

**34**. The method of claim **29**, further comprising:

inputting, via the input component is further operable to input an association; and

identifying, via the identifying component, a vehicle,

wherein said detecting, via a field-detecting component, at least one of an electric field, a magnetic field and an electro-magnetic field comprises detecting detect a magnetic field,

wherein said inputting an association comprises inputting an association between a vehicle and the detected magnetic field,

wherein said detecting a second one of an electric field, a magnetic field and an electro-magnetic field comprises detecting a second magnetic field,

wherein said generating a second detected field signature comprises generating a second detected field signature based on the detected second magnetic field, and

wherein said identifying a vehicle comprises identifying, based on the association, the vehicle as the item.

**35**. The method of claim **34**, further comprising:

providing, via a verification component, operable to provide a request for verification based on the comparison signal and the association; and

inputting, via the input component, a verification based on the request for verification.

**36**. A non-transitory, tangible, computer-readable media having computer-readable instructions stored thereon, for use with a database having stored therein, at least one of a first plurality of signatures, a second plurality of signatures and a third plurality of signatures, the first plurality of signatures corresponding to a plurality of electric fields, respectively, the second plurality of signatures corresponding to a plurality of magnetic fields, respectively, the third plurality of signatures corresponding to a plurality of electro-magnetic fields, respectively, the computer-readable instructions being capable of being read by a computer and being capable of instructing the computer to perform the method comprising:

accessing, via an accessing component, one of the first plurality of signatures, the second plurality of signatures and the third plurality of signatures from the database;

detecting, via a field-detecting component, at least one of an electric field, a magnetic field and an electro-magnetic field;

generating, via a field-detecting component, a detected field signature based on the detected one of an electric field, a magnetic field and an electro-magnetic field;

generating, via a comparing component, a comparison signal; and

identifying, via an identifying component, one of an item and a location based on the comparison signal,

wherein, when said detecting comprises detecting an electric field, said generating comprises generating the comparison signal based on a comparison of the detected field signature and the first plurality of signatures,

wherein, when said detecting comprises detecting a magnetic field, said generating comprises generating the comparison signal based on a comparison of the detected field signature and the second plurality of signatures, and

wherein, when said detecting comprises detecting an electro-magnetic field, said generating comprises generating the comparison signal based on a comparison of the detected field signature and the third plurality of signatures.

**37**. The non-transitory, tangible, computer-readable media of claim **36**, wherein the computer-readable instructions are capable of instructing the computer to perform the method such that said detecting comprises detecting the at least one of an electric field, a magnetic field and an electro-magnetic field as a function over a period of time.

**38**. The non-transitory, tangible, computer-readable media of claim **36**, the computer-readable instructions being capable of being read by a computer and being capable of instructing the computer to perform the method further comprising:

detecting, via a parameter-detecting component, a parameter; and

generating, via the parameter-detecting component, a parameter signal based on the detected parameter,

wherein said identifying comprises identifying the one of an item and a location based additionally on the parameter signal.

**39**. The non-transitory, tangible, computer-readable media of claim **38**, wherein the computer-readable instructions are capable of instructing the computer to perform the method such that said detecting a parameter comprises detecting, as the parameter, one of the group consisting of velocity, acceleration, angular velocity, angular acceleration, geodetic position, sound, temperature, vibrations, pressure, biometrics, contents of surrounding atmosphere and combinations thereof.

**40**. The non-transitory, tangible, computer-readable media of claim **36**, the computer-readable instructions being capable of being read by a computer and being capable of instructing the computer to perform the method further comprising wirelessly communicating, via a communication component, with a network.

**41**. The non-transitory, tangible, computer-readable media of claim **36**, the computer-readable instructions being capable of instructing the computer to perform the method further comprising:

inputting, via the input component is further operable to input an association; and

identifying, via the identifying component, a vehicle,

wherein said detecting, via a field-detecting component, at least one of an electric field, a magnetic field and an electro-magnetic field comprises detecting detect a magnetic field,

wherein said inputting an association comprises inputting an association between a vehicle and the detected magnetic field,

wherein said detecting a second one of an electric field, a magnetic field and an electro-magnetic field comprises detecting a second magnetic field,

wherein said generating a second detected field signature comprises generating a second detected field signature based on the detected second magnetic field, and

wherein said identifying a vehicle comprises identifying, based on the association, the vehicle as the item.

**42**. The non-transitory, tangible, computer-readable, media of claim **41**, the computer-readable instructions being capable of instructing the computer to perform the method further comprising:

providing, via a verification component, operable to provide a request for verification based on the comparison signal and the association; and

inputting, via the input component, a verification based on the request for verification.

* * * * *