US007719024B2

(12) **United States Patent**
Bando

(10) **Patent No.: US 7,719,024 B2**
(45) **Date of Patent: May 18, 2010**

(54) **SEMICONDUCTOR LIGHT EMITTING DEVICE AND A METHOD FOR PRODUCING THE SAME**

(75) Inventor: **Yoshitaka Bando**, Tokushima (JP)

(73) Assignee: **Nichia Corporation**, Anan-shi (JP)

(*) Notice: Subject to any disclaimer, the term of this patent is extended or adjusted under 35 U.S.C. 154(b) by 161 days.

(21) Appl. No.: **11/616,533**

(22) Filed: **Dec. 27, 2006**

(65) **Prior Publication Data**

US 2007/0262328 A1 Nov. 15, 2007

(30) **Foreign Application Priority Data**

May 10, 2006 (JP) 2006-131915
Sep. 12, 2006 (JP) 2006-247359
Oct. 6, 2006 (JP) 2006-274724

(51) **Int. Cl.**
H01L 31/0224 (2006.01)

(52) **U.S. Cl.** **257/99**; 257/100; 257/676; 257/692; 257/E33.065; 257/E33.066

(58) **Field of Classification Search** 257/81, 257/95, 98–100, E33.057, E33.058, E33.059, 257/E33.067, E33.068, 676, 692–697, E53.019, 257/E33.065, E33.066; 362/327, 545, 555, 362/612, 800
See application file for complete search history.

(56) **References Cited**

U.S. PATENT DOCUMENTS

6,054,716 A * 4/2000 Sonobe et al. 250/552
2002/0163001 A1* 11/2002 Shaddock 257/79
2002/0185649 A1* 12/2002 Oshio 257/81
2007/0252246 A1* 11/2007 Ng et al. 257/666

FOREIGN PATENT DOCUMENTS

JP 2004214338 A * 7/2004
JP 2005-33194 2/2005

OTHER PUBLICATIONS

www.nichia.co.jp/jp.product/led-smd.powerled.html, Nichia Products, SMD Type LED, Power LED Series, accessed May 8, 2006.
"LED catalogue," NICHIA, Apr. 2006.

* cited by examiner

Primary Examiner—Sue Purvis
Assistant Examiner—Leslie Pilar Cruz
(74) *Attorney, Agent, or Firm*—Ditthavong Mori & Steiner, P.C.

(57) **ABSTRACT**

Both ends of the lead arrangement project outward from side surfaces of a package to form outer lead regions. Each of the outer lead regions includes a pair of outer lead projections and lead terminal smaller projections that are located between the outer lead projections. The outer lead projections and lead terminal smaller projections project outward. Adjustment is made to the projection amount of end surfaces of the lead smaller projections lying in a plane perpendicular to a longitudinal direction of the lead arrangement, whereby the end surfaces projecting less than end surfaces of the outer lead projections. Thus, cut surfaces of lead connection portions with edged corners are not exposed. This arrangement prevents that the cut surfaces damage other devices.

9 Claims, 18 Drawing Sheets

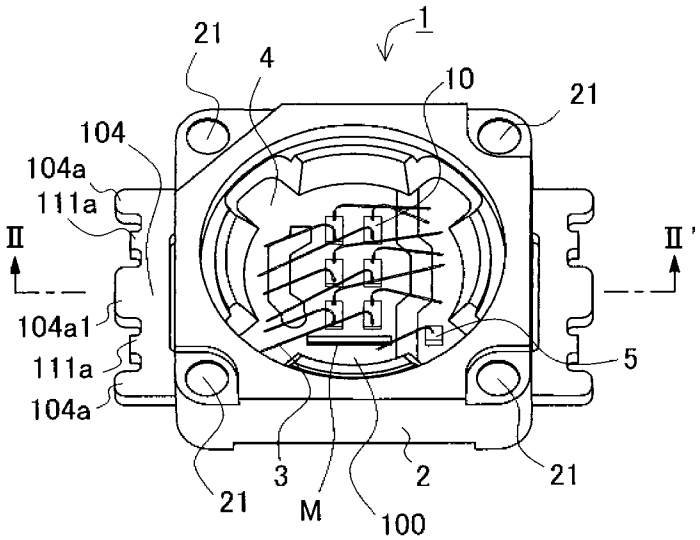

FIG.1

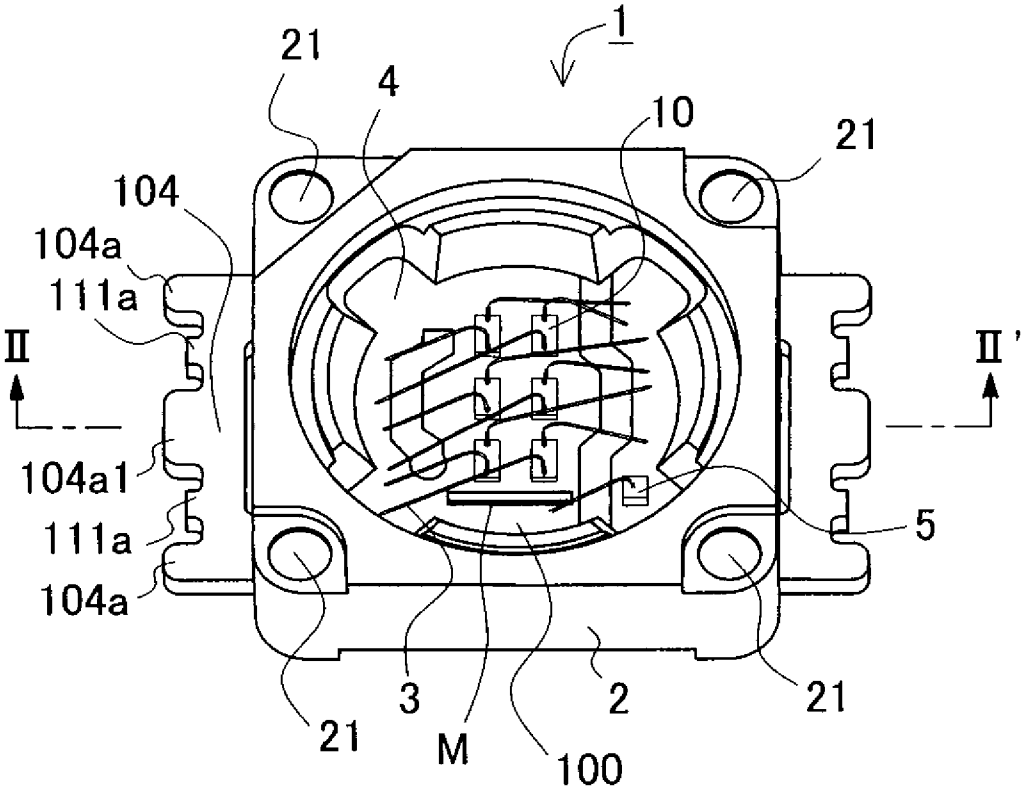

FIG.2

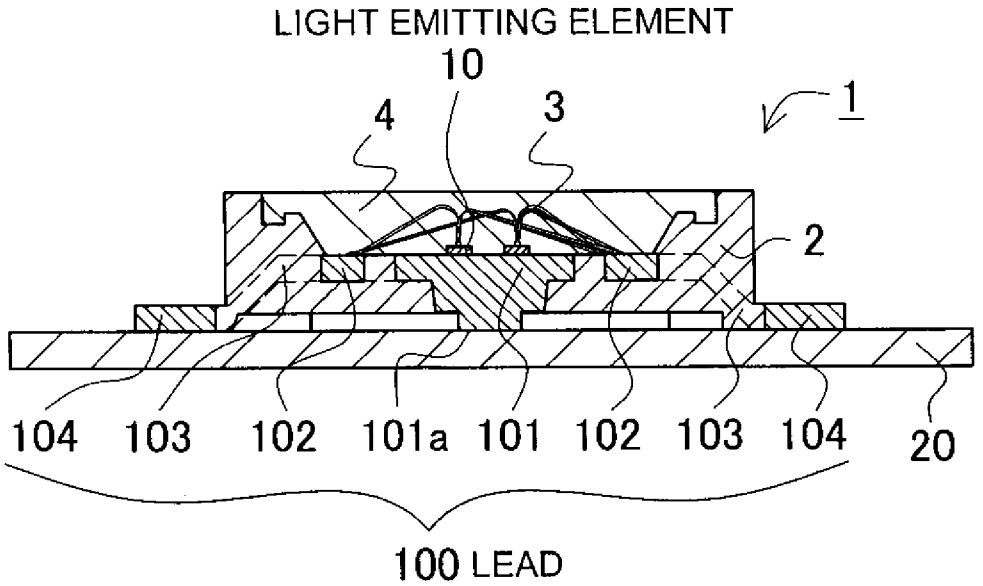

101 • • LEAD MIDDLE REGION

102 • • LEAD PERIPHERAL REGION

103 • • LEAD BENT REGION

FIG.3

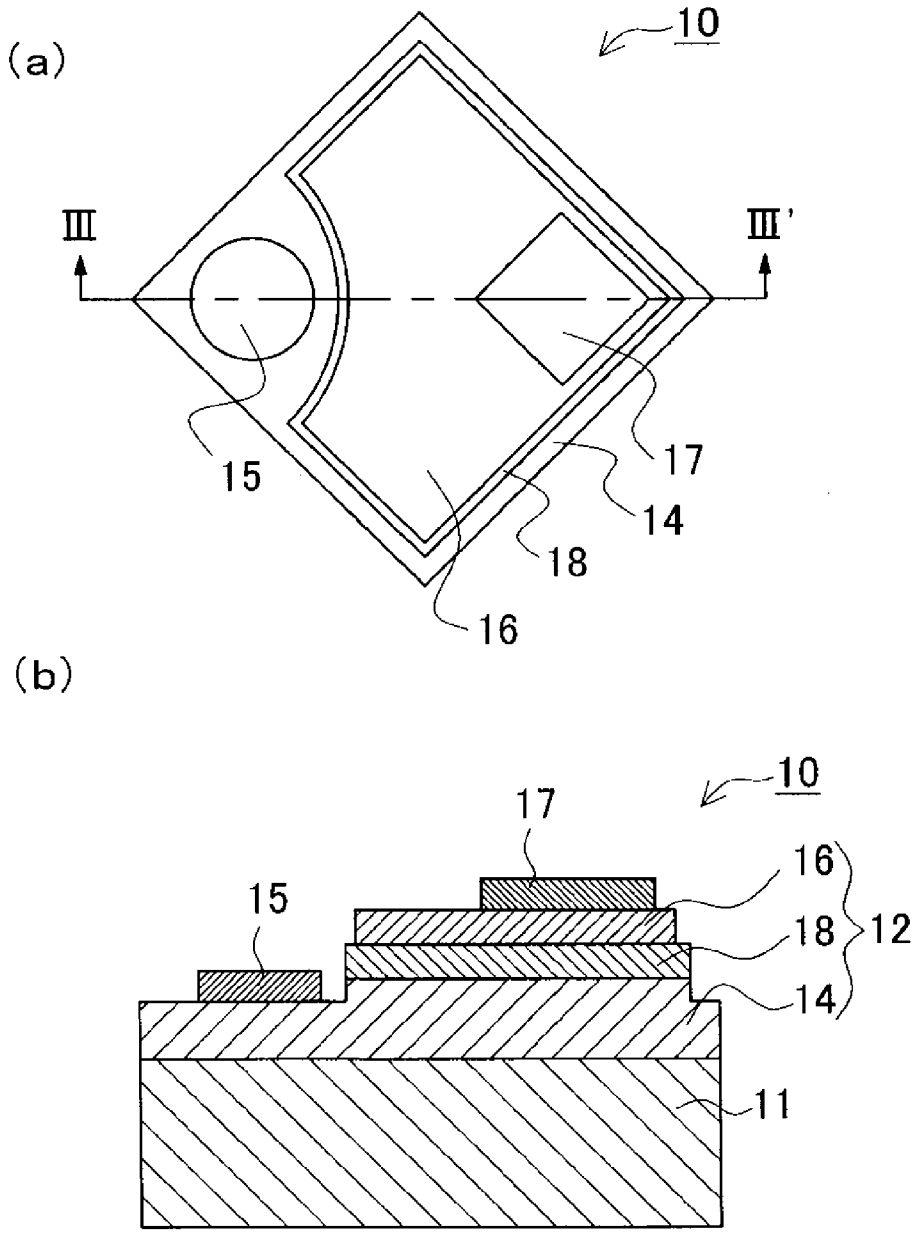

FIG.4

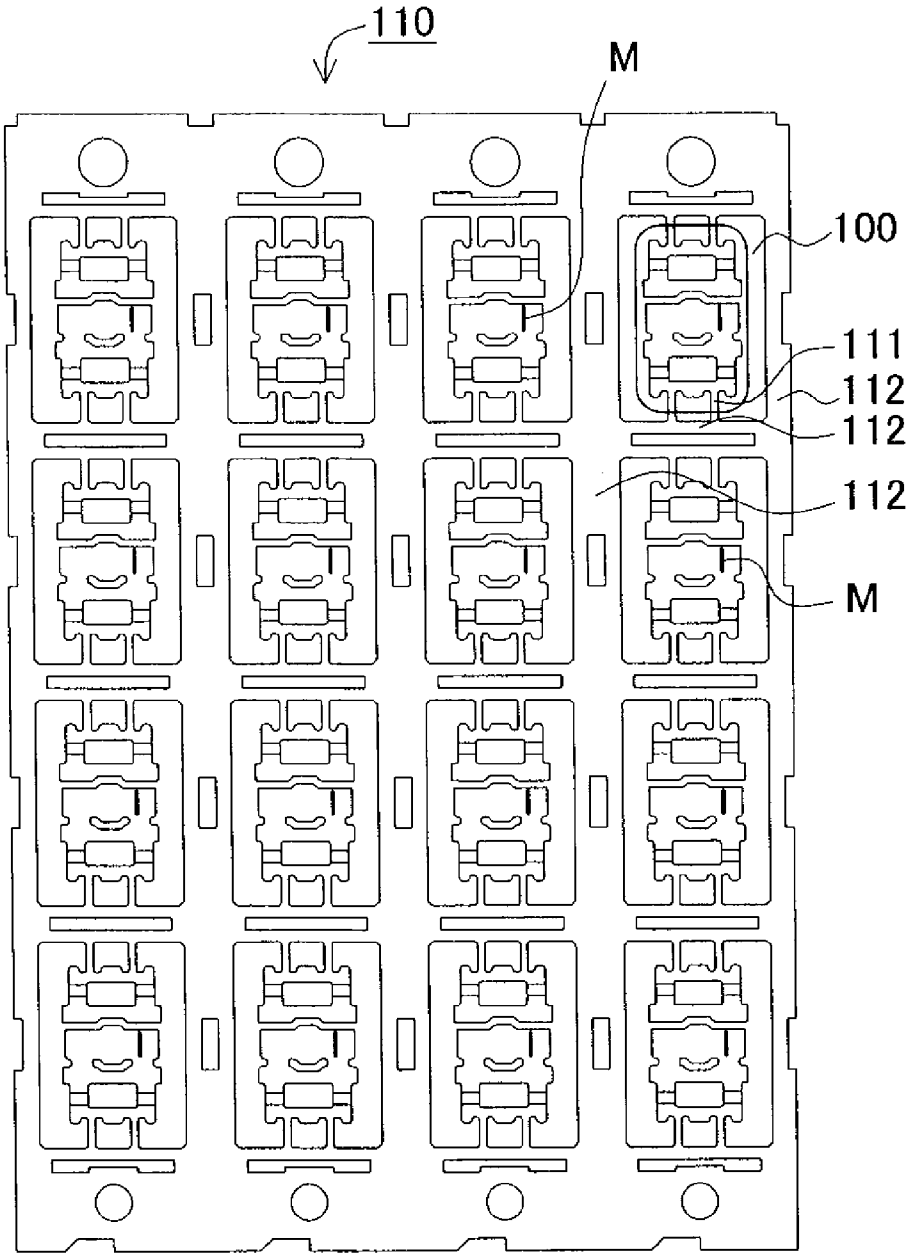

FIG.5

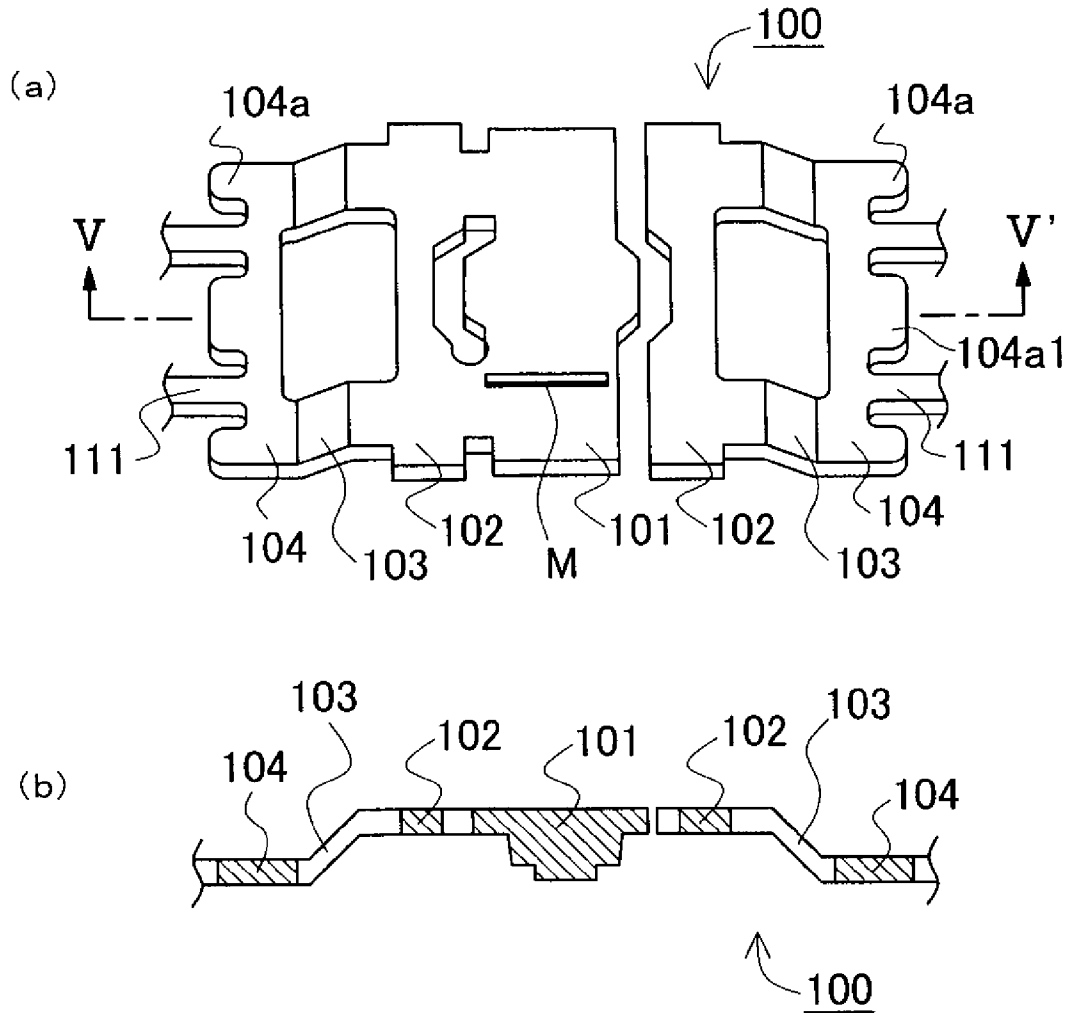
(a)
100
104a
104a
V
V'
104a1
111
111
104
103
102
M
101
102
104
103
(b)
103
102
101
102
103
104
104
100

FIG.6

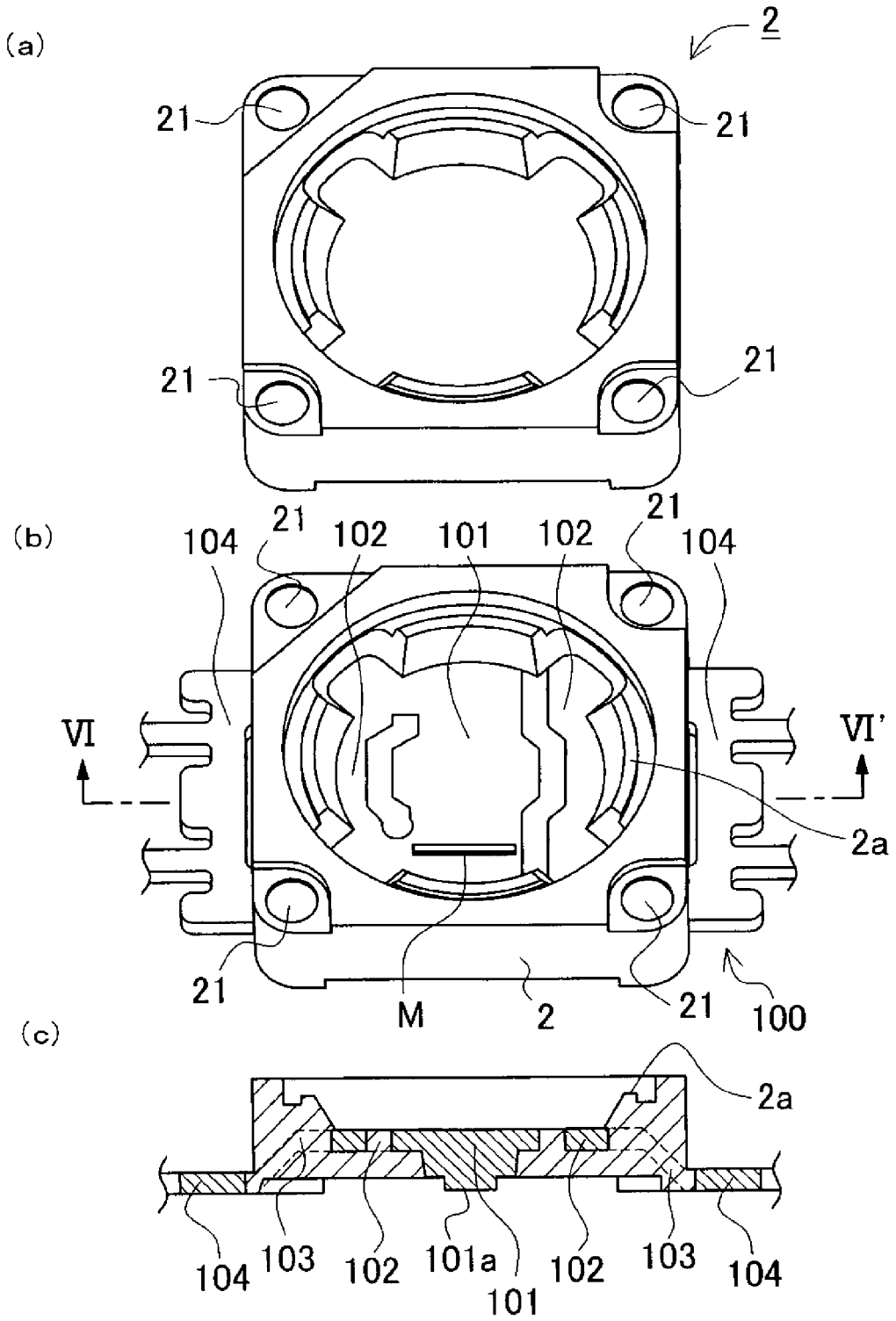
(a)
2
21
21
21
21
(b)
104
21
102
101
102
21
104
VI
VI'
2a
21
M
2
21
100
(c)
2a
104
103
102
101a
101
102
103
104

FIG.7

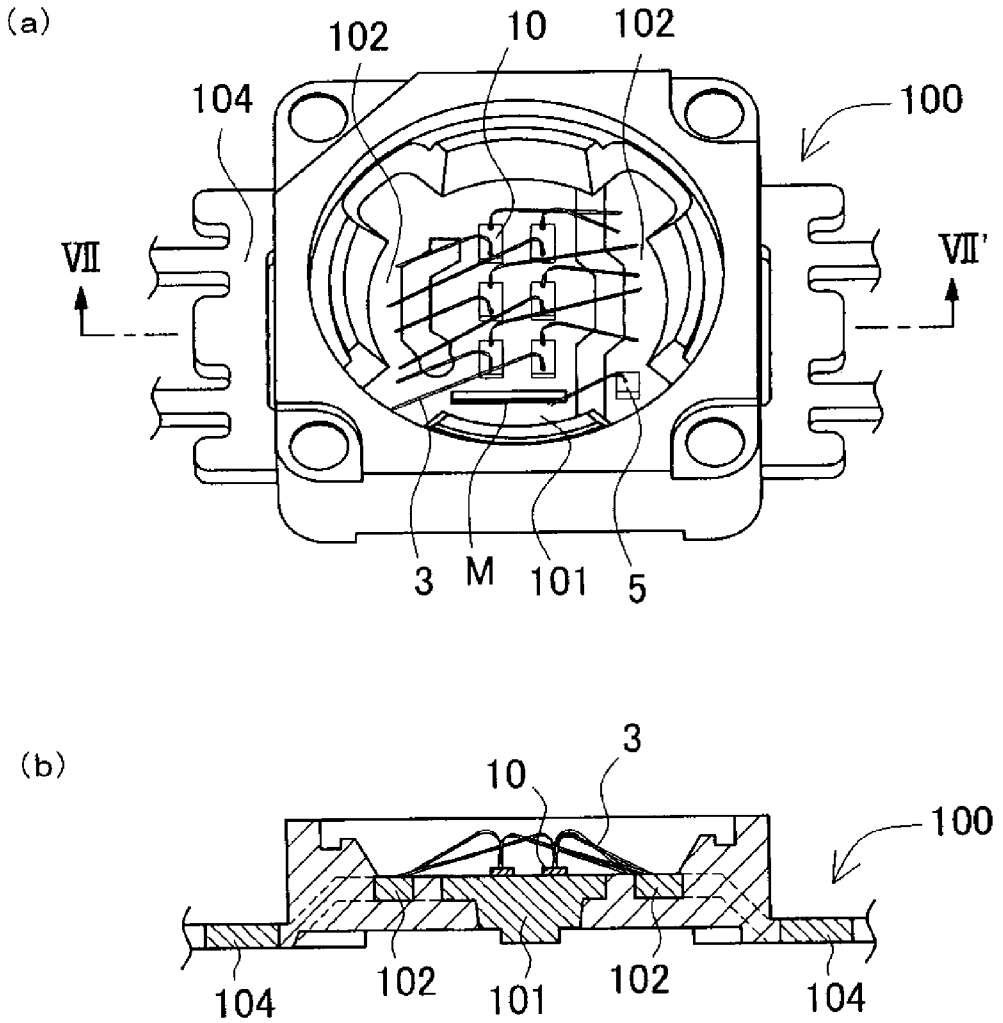

FIG.8

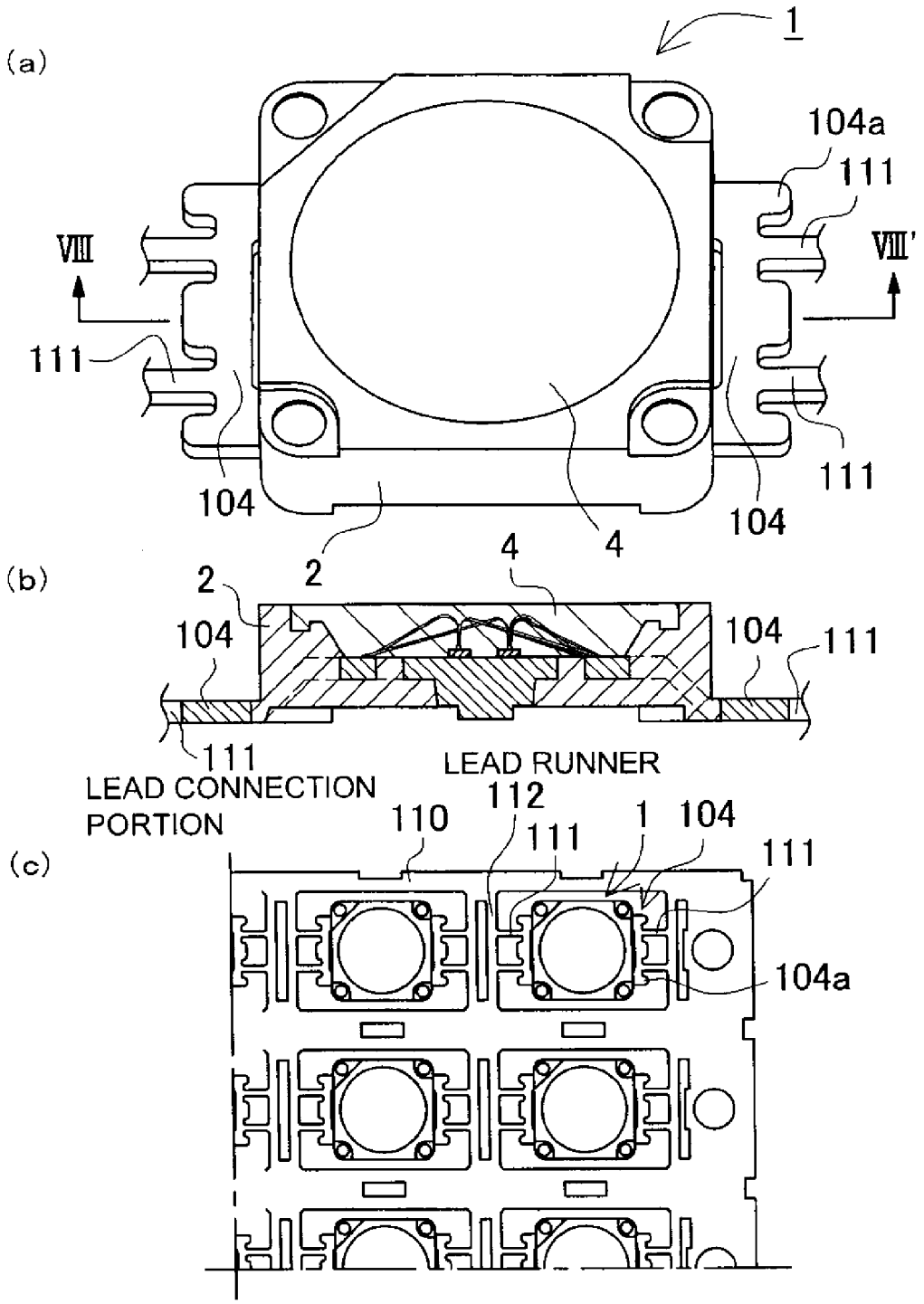
(a)
1
104a
111
VIII
VIII'
111
104
2
4
4
104
111
(b)
2
2
4
104
104
111
111
LEAD CONNECTION PORTION
LEAD RUNNER
(c)
110
112
111
1
104
111
104a

FIG.9

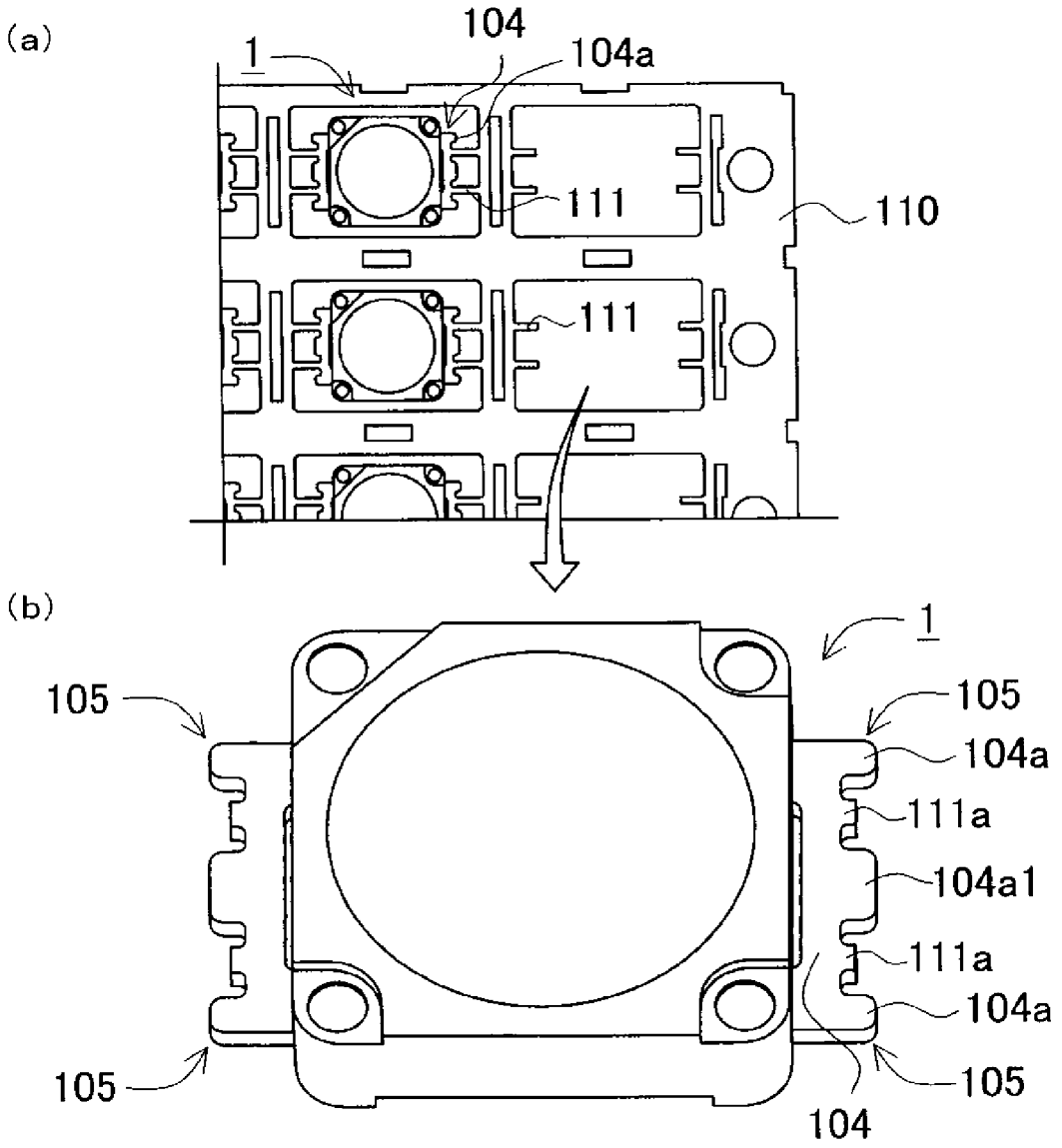
(a)
1
104
104a
111
110
111
(b)
1
105
105
104a
111a
104a1
111a
104a
105
105
104

FIG.10

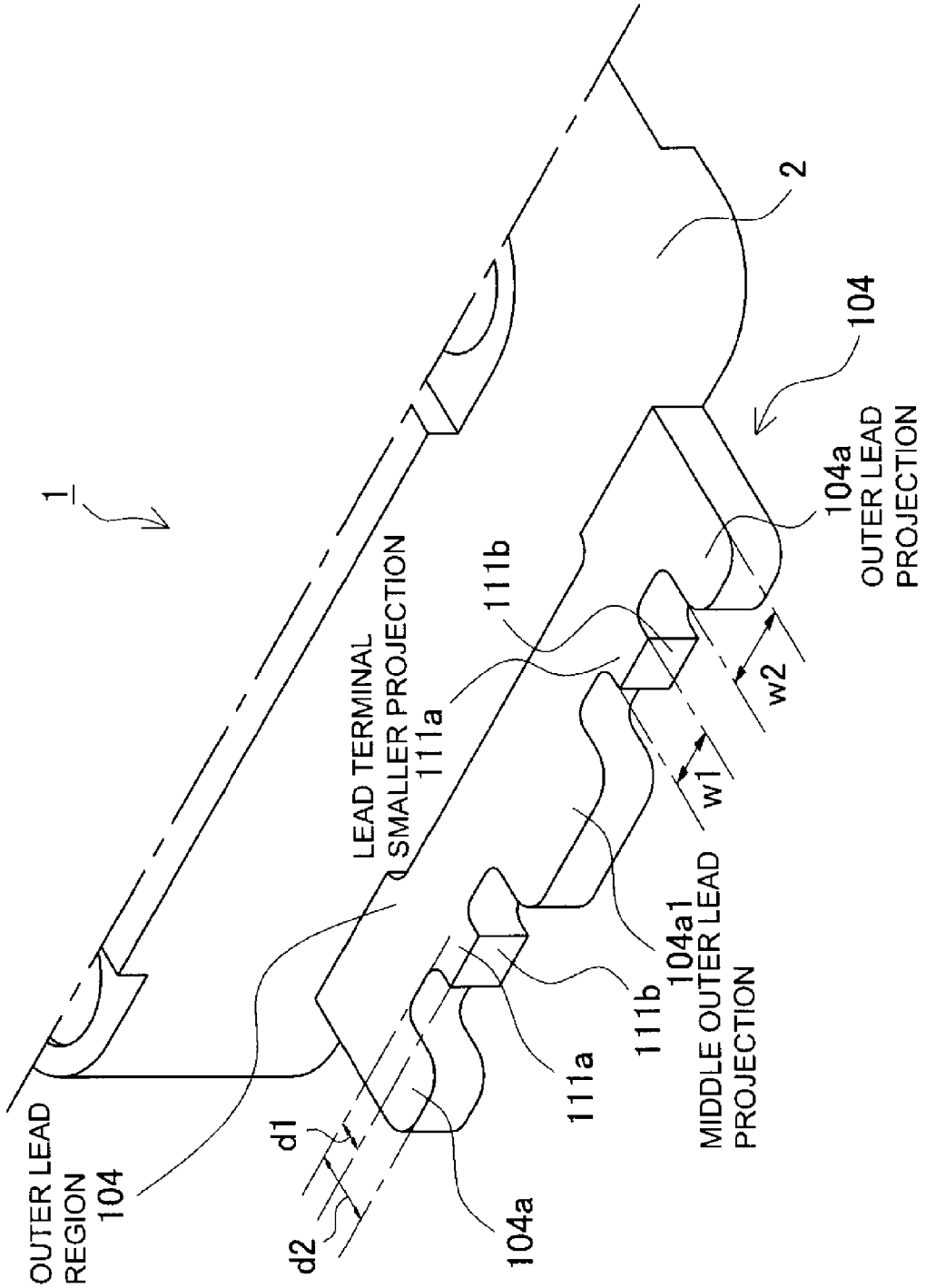
1
2
104
104a
OUTER LEAD
PROJECTION
w2
w1
104a1
MIDDLE OUTER LEAD
PROJECTION
111b
111a
LEAD TERMINAL
SMALLER PROJECTION
111a
111b
104a
d1
d2
OUTER LEAD
REGION
104

FIG. 11

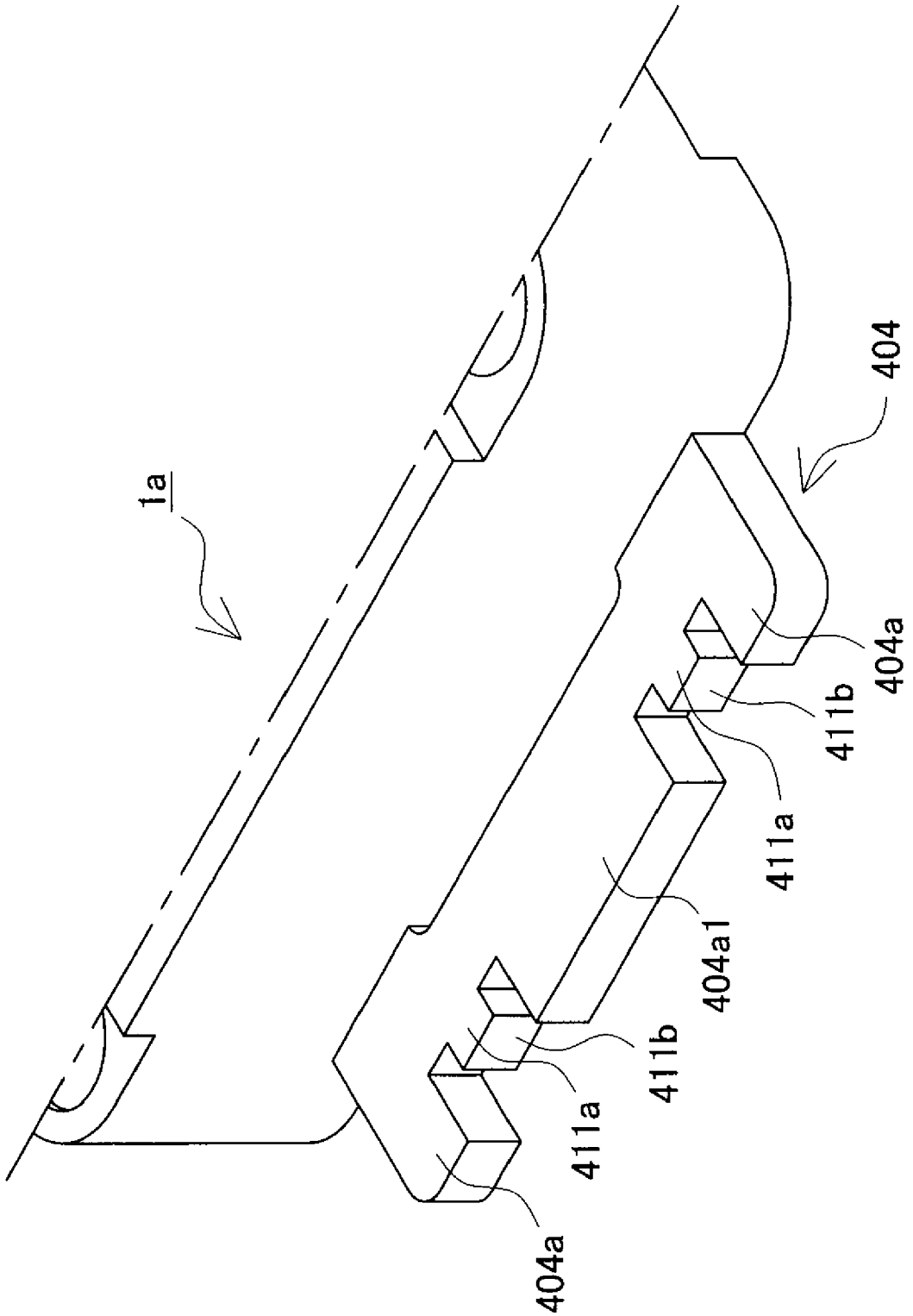

FIG. 12

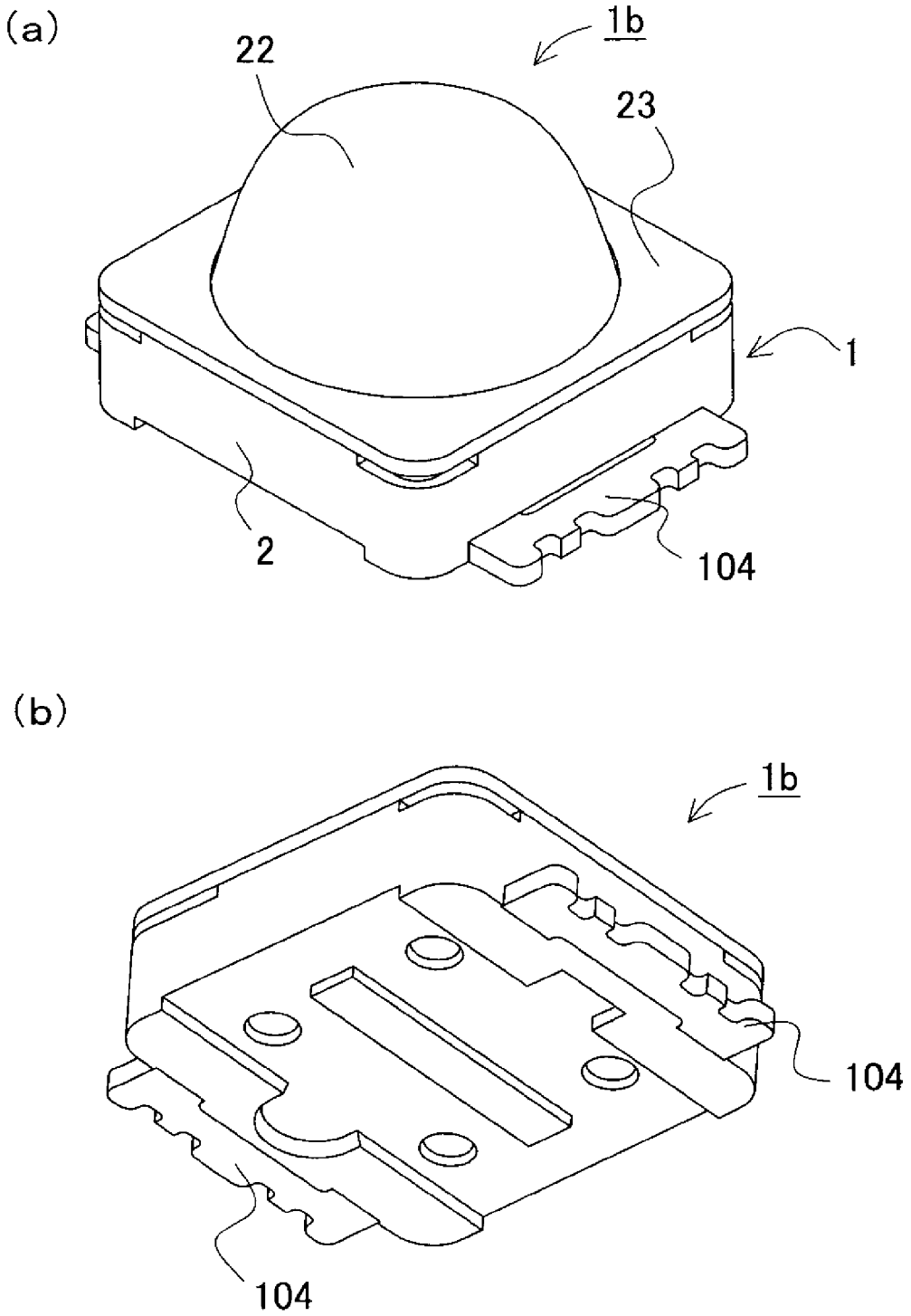

FIG. 13

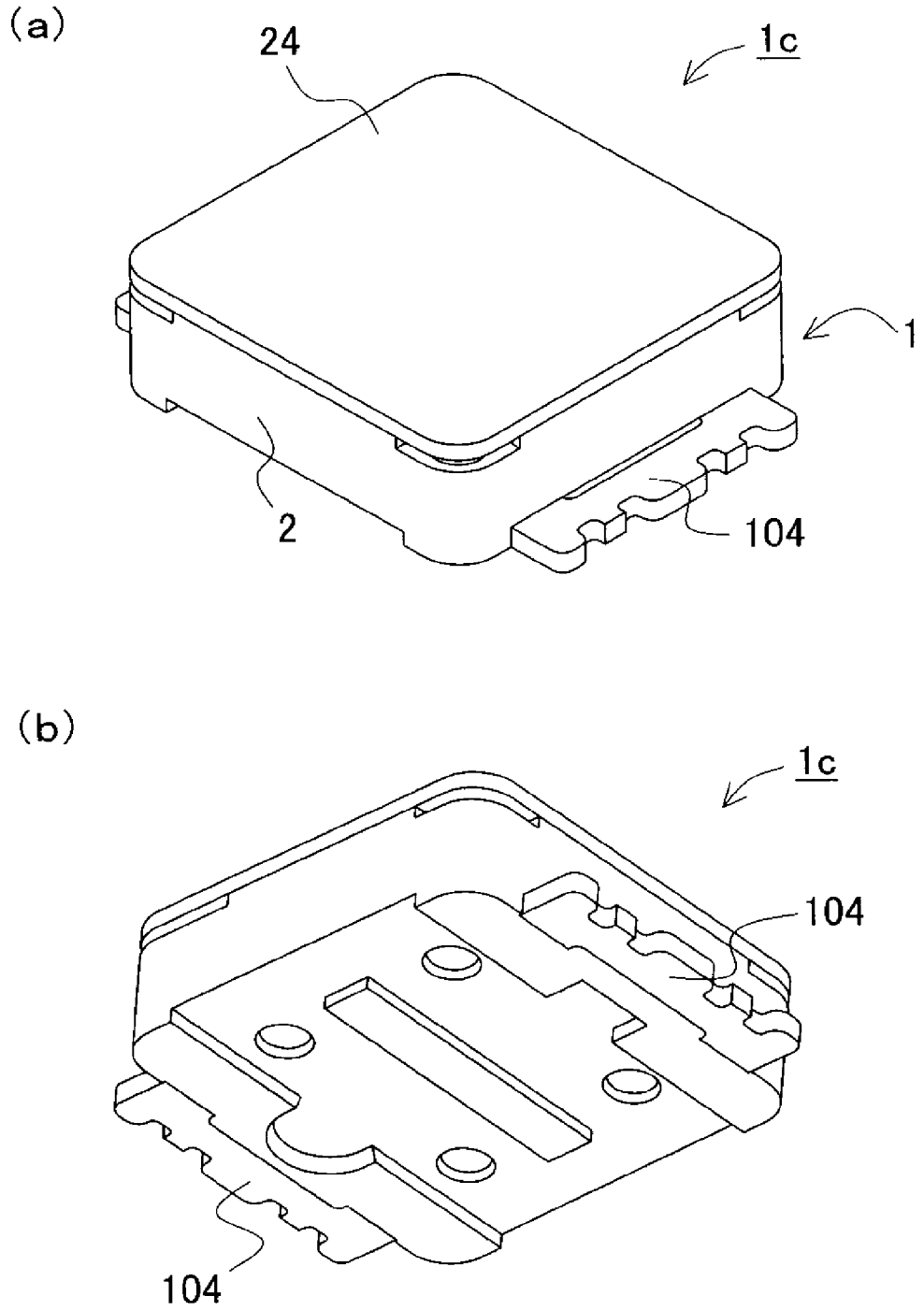

FIG.14

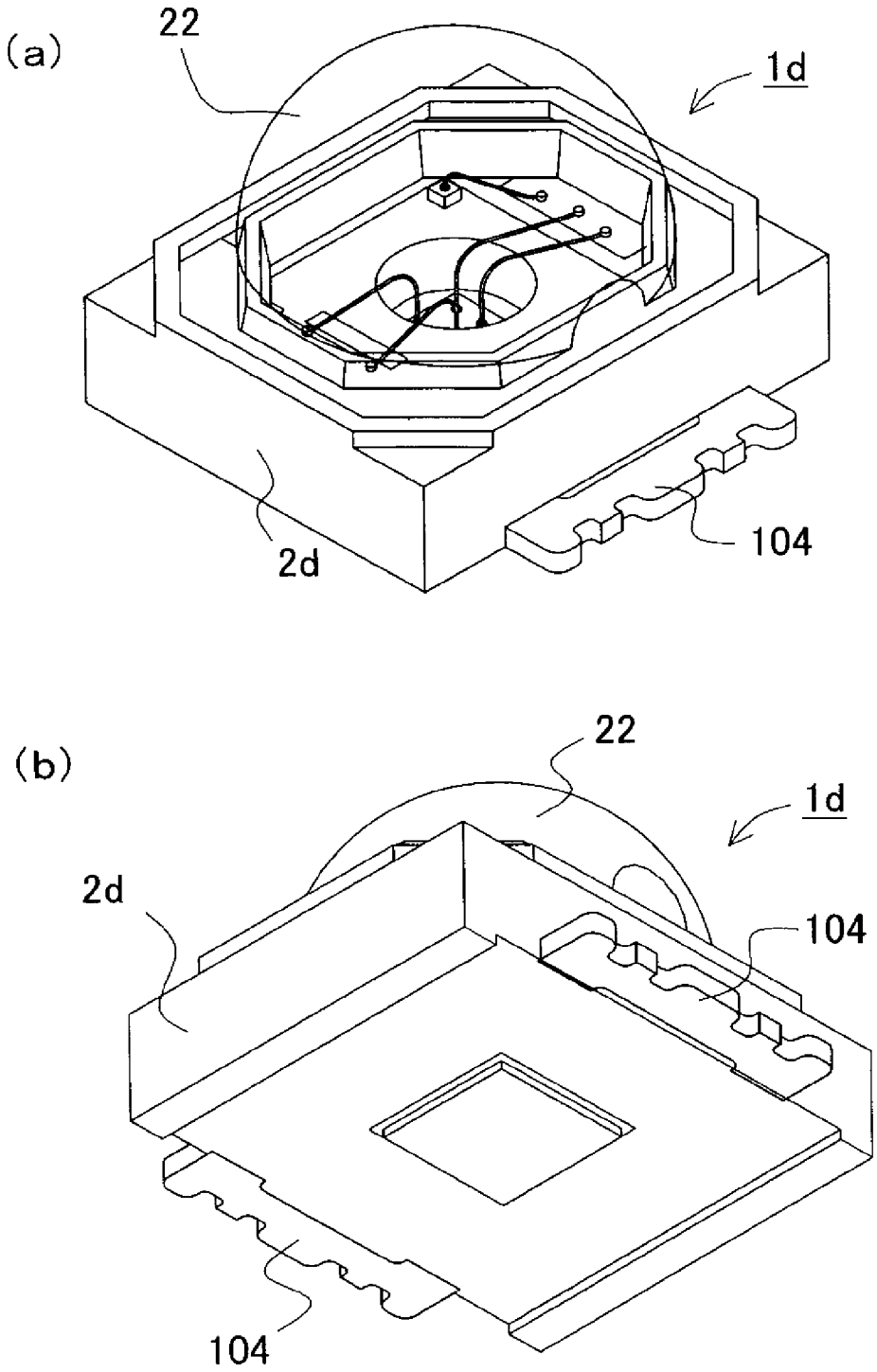

FIG.15

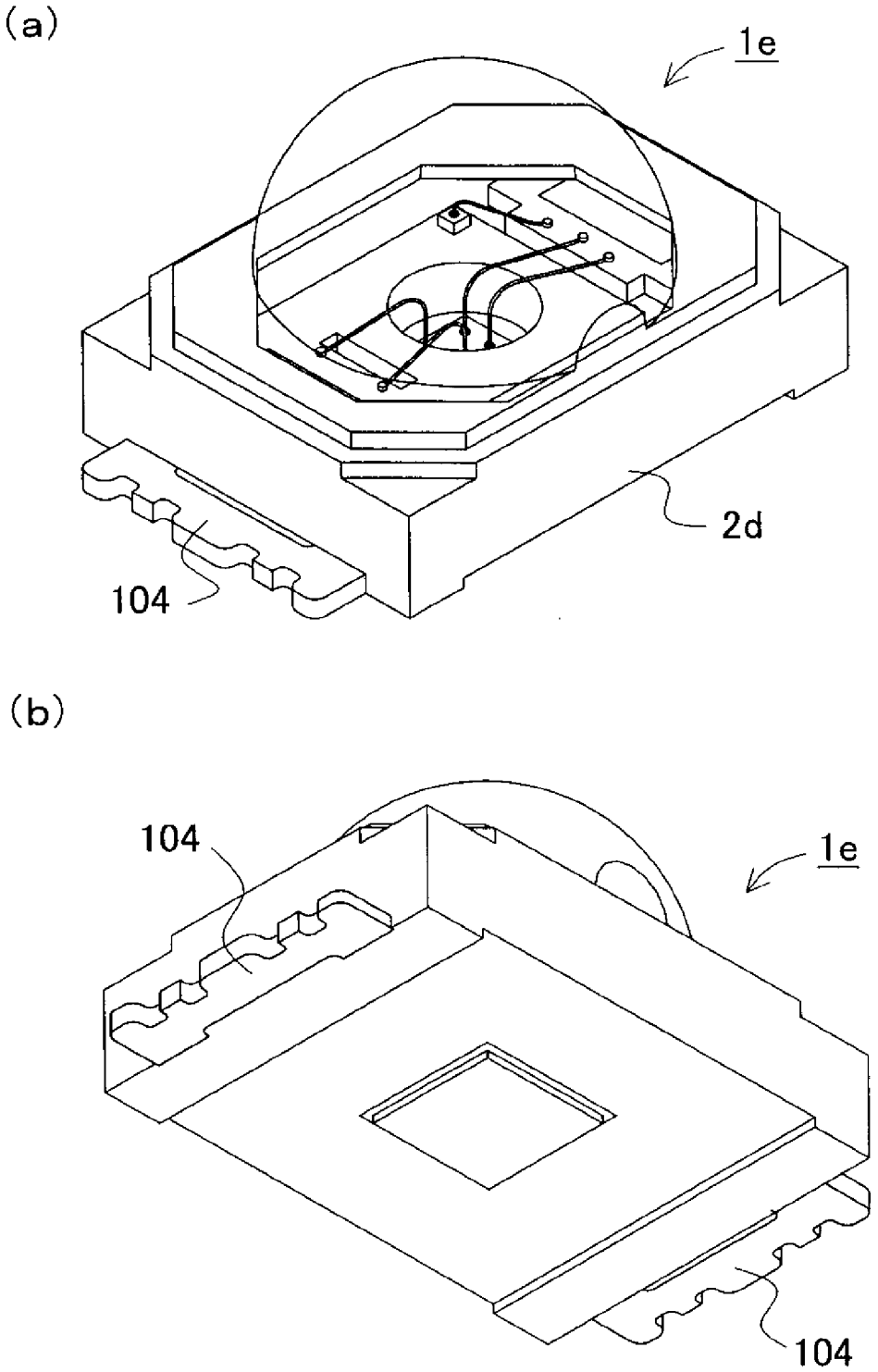

FIG. 16

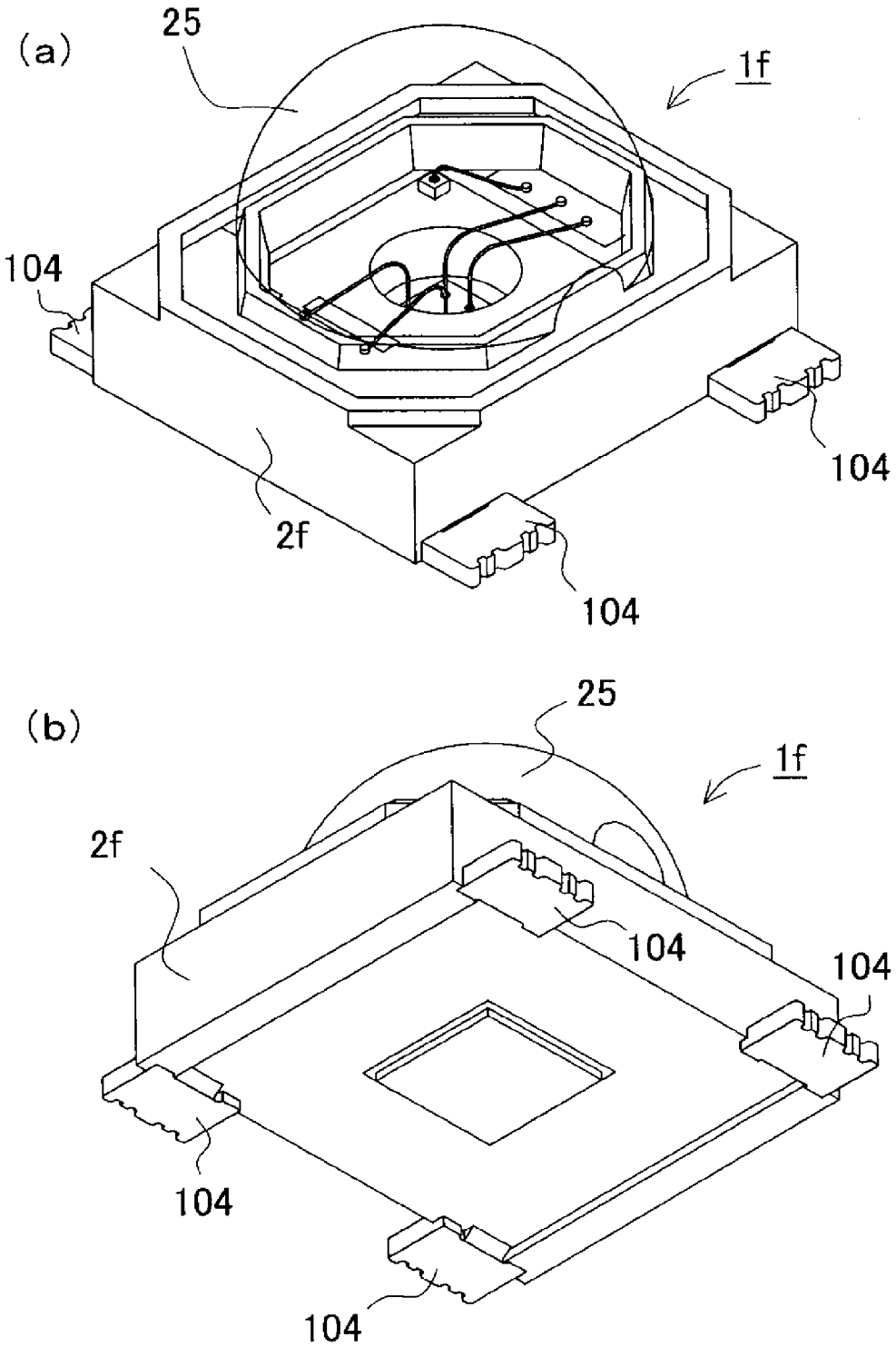

FIG. 17
(BACKGROUND ART)

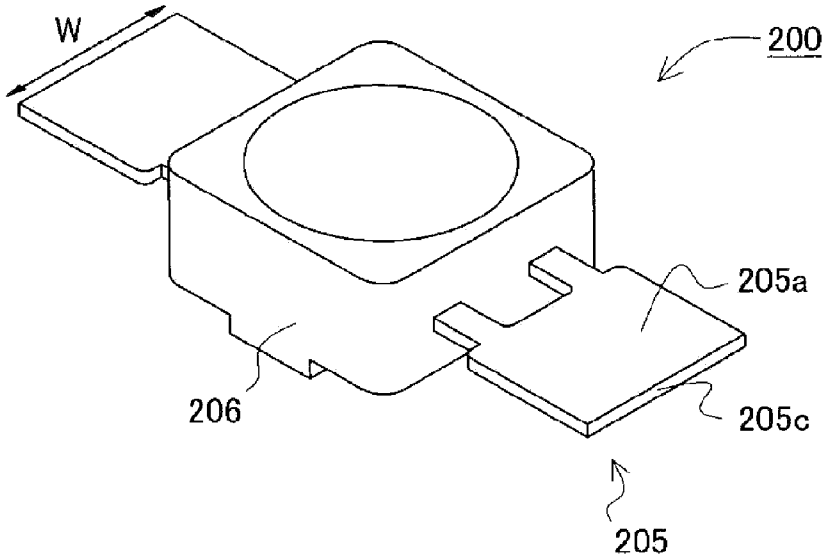

FIG. 18
(BACKGROUND ART)

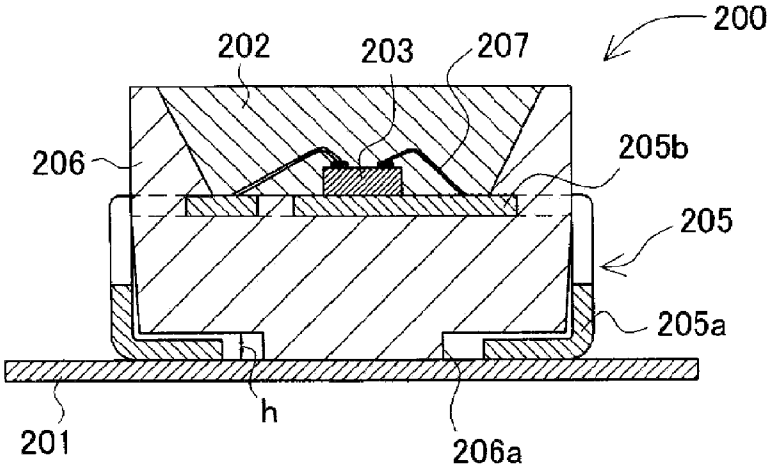

FIG.19
(BACKGROUND ART)

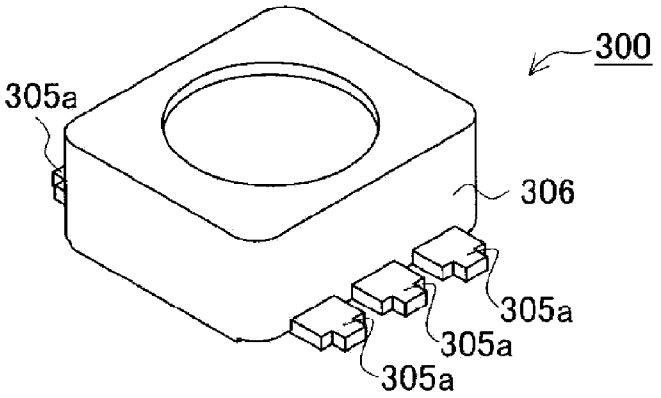

FIG.20
(BACKGROUND ART)

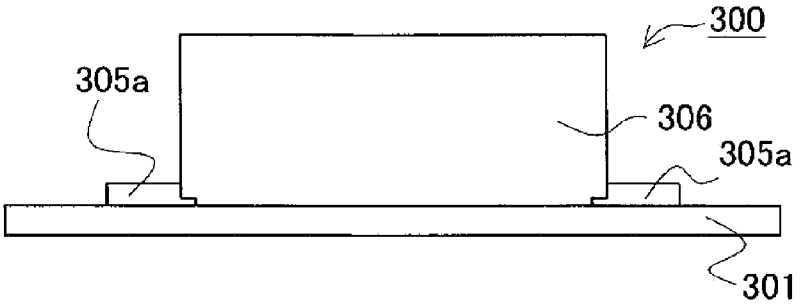

SEMICONDUCTOR LIGHT EMITTING DEVICE AND A METHOD FOR PRODUCING THE SAME

BACKGROUND OF THE INVENTION

1. Field of the Invention

The present invention relates to a semiconductor light emitting device, and a method for producing it.

2. Description of the Related Art

FIG. **17** is a perspective view showing one production process of a conventional LED light emitting device **200**. FIG. **18** is a cross-sectional view showing the LED light emitting device **200**. The LED light emitting device **200** includes a package **206** and a lead **205**, as shown in FIG. **8**. The package **206** includes space that opens upward and has a substantially inverted truncated cone shape. The lead **205** is made of a conductive material and is fixedly attached to the package **206**. The lead **205** includes a lead middle portion **205***b* that is located in a substantially middle part of the light emitting device, and a lead terminal portion **205***a* that projects outward of the package **206**. When the lead **205** and the package **206** are fixedly attached, the lead middle portion **205***b* that is a part of the lead **205** is exposed in the space in the packaged **206** that has a substantially inverted truncated cone shape. An LED chip **203** is mounted on the exposed lead middle portion **205***b* in the space of the package **206**. In addition, the lead middle portion **205***b* penetrates and extends inside the package **206** as shown by a dashed line. The lead then projects from a substantially center on the side surface of the package **206** in the thickness direction. The thus-projecting lead **205** is bent at substantially right angle so as to extend along the side surface of the package, and is again bent at substantially right angle so as to turn a corner toward the bottom of the package **206** as shown in FIG. **18**. A lead region that extends outside the package **206**, in other words, a lead region that is bent so as to extend along the side and bottom surfaces of the package **206** is referred to as the lead terminal portion **205***a*. Note that FIG. **17** is the perspective view showing the LED light emitting device **200** prior to bending the lead terminal portion **205***a*. Additionally, sealing resin **202** is filled in the space that opens in the package **206**.

In conventional production of the light emitting device **200**, a plurality of patterns for light emitting devices are formed in a lead frame **110** made of a sheet of conductive material as shown in FIG. **4**. Subsequently, the lead frame is subjected to production processes. The lead frame is cut and separated into individual patterns in a certain process. Thus, a plurality of light emitting devices are produced at a time. FIG. **17** shows the individual light emitting device **200** that is separated by cutting proper locations in the lead **205** that connects LED light emitting devices after the aforementioned production processes.

As shown in FIG. **18**, the LED chip **203** is mounted on the lead middle portion **205***b*, and they are electrically conducted to each other. In addition, the lead terminal portion **205***a* that is bent toward the bottom surface side of the light emitting device **200** is installed on a mount body **201** with conductive patterns by solder or the like. This installation provides electrically connection between the LED chip **203** and the mount body **201** through the lead terminal portion **205***a*. However, in this construction, there are problems that require a process for bending the lead terminal portion so as to adjust its alignment along the side and bottom surfaces of the semiconductor light emitting device, reduce resistance of lead terminal portion due to the bent lead terminal portion, and make the LED light emitting device thick since the lead terminal portion is bent so as to extend the side and bottom surfaces thereof.

Furthermore, the lead terminal portion **205***a* requires a length enough to be bent to some extent. In addition, since the lead **205** is made of a conductive material such as copper and iron, silver or the like is plated to prevent oxidation. The thus-plated lead **205** has good wettability, and can be stably bonded to the mount body **201** with solder or the like. Generally, the lead frame **110** is plated as shown in FIG. **4**. The patterns on the plated lead frame **110** are subjected to LED light emitting device processing. In other words, in a process after plating, proper locations of the leads **205** that connect the LED light emitting devices are cut, as a result, the connected LED light emitting devices are separated into individuals. Accordingly, a cut surface **205***c* that is produced by cutting the lead **205** is not plated. For this reason, this cut surface is prone to be oxidized to rust. Additionally, since the oxidized cut surface **205***c* has poor wettability, solder or the like crawls. As a result, there is a problem that causes insufficient adhesiveness between the oxidized cut surface **205***c* and the mount body **201**. Additionally, in mass-production processes of a number of LED light emitting devices, the sharp cut surface **205***c* of the lead terminal portion that projects from the end surface of one LED light emitting device may damage other semiconductor light emitting devices. On the other hand, since the lead terminal portion **205***a* is long, the lead terminal portion may be bent at an undesired angle due to some shock, or may be cut off. Additionally, long lead terminal portions reduce the number of leads that are arranged in patterns in one sheet of lead frame, and thus cause poor efficiency and comparatively high cost.

Furthermore, as shown in FIG. **18**, in the case where the lead terminal portion **205***a* that contacts the bottom surface of the LED light emitting device **200** and the mount body **201** are fixedly attached with solder or the like, a surface layer of the lead terminal portion **205***a* serves as a bonding surface. Accordingly, in order to stably fix them, as shown in FIG. **17**, the lead terminal portion **205***a* should have a width W to some extent. In addition, if the lead terminal portion **205***a* is not bent so as to extend along the bottom surface of the package **206**, the bottom surface of the package **206** and the top surface of the mount body **201** are not bonded in parallel. In this case, the LED light emitting device may be fixedly attached at an incline. As a result, there is a problem that the reach of light emitted from the LED light emitting device **200** is deviated.

In order to prevent this deviation of the reach, as shown in FIG. **18**, a projection portion **206***a* is disposed on the bottom surface of the package **206**, so that the bottom surface of this projection portion **206***a* and the mount body **201** are in stable contact with each other. Accordingly, it is necessary to accommodate the lead terminal portion **205***a* in a height h of the projection portion **206***a* on the bottom surface of the package. However, depending on the length, bent angle or bent location of lead terminal portion **205***a*, the lead terminal portion **205***a* pushes the package **206** upward. Thus, a gap may be produced between the package **206** and the mount body **201**. As a result, the installation angle or installation location of the LED light emitting device **200** can be deviated. In addition, the lead terminal portion **205***a* may not completely align along the bottom surface of the package **206**, as a result, there is a problem that the LED light emitting device **200** and the mount body **201** are not stably and mechanically or electrically coupled to each other. Additionally, since the lead terminal portion has a relatively large width W, the width of the cut surface **205***c* correspondingly becomes wider. This increases the defect due to the aforementioned cut surface of the lead terminal portion.

Moreover, FIG. **19** is a perspective view showing another LED light emitting device **300**. FIG. **20** is a side view of the LED light emitting device **300** shown in FIG. **19**. The lead terminal portions of the LED light emitting device **300** shown in FIG. **19** have a length shorter than the lead terminal portion **205***a* of the LED light emitting device shown in FIGS. **17** and **18**, and additionally are not bent. In addition, the lead terminal portions **305***a* of the LED light emitting **300** horizontally project outward of a package **306** from the bottom surface of the package **306** as shown in FIGS. **19** and **20**. Accordingly, in the case where the LED light emitting device **300** contacts the mount body **301**, the lead terminal portion **305***a* contacts the mount body **301**. In this case, they can be fixed by solder or the like. As a result, it is not necessary to bend the lead terminal portion **305***a* so as to turn a corner toward the bottom surface side of the package **306**, in order to provide a contact region with the mount body **301**.

However, a projection portion is formed in a substantially rectangular projection on the end surface of the lead terminal portion **305***a*, and has a cut surface that is produced when the lead terminal portion **305***a* is cut off from a lead frame. Since this projection portion has edged corners, these parts may damage other light emitting devices **300**. On the other hand, the defect that the cut surface is oxidized in air is not still solved. See Japanese Patent Laid-Open Publication TOKU-KAI No. 2005-33194.

SUMMARY OF THE INVENTION

The present invention is aimed at solving the problems. It is an object of the present invention to provide a semiconductor light emitting device that can reduce defects due to a cut surface of a lead and can be stably bonded on a mount body, and a method producing it.

To achieve the above object, a semiconductor light emitting device according to a first aspect of the present invention comprises conductive lead arrangement that has a first surface and a second surface opposed to the first surface; a package that covers at least the first surface side of the lead arrangement and has an opening recessed as viewed in a cross-section, the opening being formed so that the first surface is partially exposed in the bottom of the opening; a semiconductor light emitting element that is thermally conducted to and secured on the first surface of the lead arrangement in the bottom of the opening of the package; and a sealing resin that seals the opening of the package. Both ends of the lead arrangement project outward from side surfaces of the package to form outer lead regions. Each of the outer lead regions includes a pair of outer lead projections and lead terminal smaller projection(s) that is/are located between the outer lead projections. The outer lead projections and lead terminal smaller projection(s) project outward. Adjustment is made to the projection amount(s) of end surface(s) of the lead smaller projection(s) lying in a plane perpendicular to a longitudinal direction of the lead arrangement, whereby the end surface(s) projecting less than end surfaces of the outer lead projections.

In addition, in a semiconductor light emitting device according to a second aspect of the present invention, each of the pair of outer lead projections can project outward so that its side surface parallel to the longitudinal direction of the lead arrangement is substantially coplanar with the outer lead region, and a corner of each outer lead projection where the side surface and the end surface intersect each other can be rounded.

In addition, in a semiconductor light emitting device according to a third aspect of the present invention, the end surface of the lead terminal smaller projection can have edged corners.

In addition, in a semiconductor light emitting device according to a fourth aspect of the present invention, the lead terminal region can be provided with three outer lead projections and two lead terminal smaller projections. In this construction, the three outer lead projections include the pair of the outer lead projections that are located on the both sides of the outer lead region, and a middle outer lead projection that is located between the end side outer lead projections. Each of the two lead terminal smaller projections is located between the middle outer lead projection and each of the end side outer lead projections.

In addition, in a semiconductor light emitting device according to a fifth aspect of the present invention, a plurality of the outer lead projections can have end surfaces that are substantially coplanar with each other, and a plurality of the lead terminal smaller projections can have end surfaces that are substantially coplanar with each other.

In addition, in a semiconductor light emitting device according to a sixth aspect of the present invention, a protection film can cover the surface of the lead arrangement that is externally exposed except the end surfaces of a plurality of the lead terminal smaller projections. A material that can prevent metal oxidation, and so on can be used as the protective film, for example.

In addition, in a semiconductor light emitting device according to a seventh aspect of the present invention, the total areas of end surfaces of a plurality of the outer lead projections can be greater than the total area of end surface(s) of the lead terminal smaller projection(s).

In addition, in a semiconductor light emitting device according to an eighth aspect of the present invention, the lead arrangement can include a lead middle region that is located in a middle part in the longitudinal direction and is provided with the semiconductor light emitting element mounted on the first surface, lead peripheral regions that are located beside the lead middle region and substantially coplanar with the lead middle region, the outer lead regions that are located on the both ends and project from the side surfaces of the package, the outer lead regions being in parallel to not lying in coplanar with the lead middle region, and lead bent regions that divergently extend from the lead peripheral regions and connect the outer lead regions to the lead peripheral regions. In this construction, the lead arrangement is embedded in the package so that the package covers at least partially both the first and second surfaces.

In addition, in a semiconductor light emitting device according to a ninth aspect of the present invention, in the state where the lead arrangement is embedded in the package, the second surface side of the lead middle region can be at least partially exposed from the package, and the exposed surface can be substantially coplanar with the second surface side of the outer lead regions.

Furthermore, a method according to a tenth aspect of the present invention is a method for manufacturing a semiconductor light emitting device that includes conductive lead arrangement that has a first surface and a second surface opposed to the first surface, a package that covers at least the first surface side of the lead arrangement and has an opening recessed as viewed in a cross-section, the opening being formed so that the first surface is partially exposed in the bottom of the opening, a semiconductor light emitting element that is thermally conducted to and secured on the first surface of the lead arrangement in the bottom of the opening

of the package, a sealing resin that seals the opening of the package. The method comprises the steps of covering the lead arrangement with the package so that both ends of the lead arrangement project outward from side surfaces of the package to form the outer lead regions, the lead arrangement being formed in a plurality of patterns that are connected by frame-shaped lead runners and lead connection portions on a sheet of lead frame to define the lead arrangement by stamping; mounting the semiconductor light emitting element on the first surface of the lead arrangement through the opening of the package; filling the opening of the package with the sealing resin; and cutting the lead connection portions at locations that are closer to the package side relative to end surfaces of a pair of outer lead projections in the state where each of the lead connection portions is interposed between the outer lead projections that project outward in each of the outer lead regions.

Still furthermore, a semiconductor light emitting device according to an eleventh aspect of the present invention comprises conductive lead arrangement that has a first surface and a second surface opposed to the first surface; a package that covers at least the first surface side of the lead arrangement and has an opening recessed as viewed in a cross-section, the opening being formed so that the first surface is partially exposed in the bottom of the opening; a semiconductor light emitting element that is thermally conducted to and secured on the first surface of the lead arrangement in the bottom of the opening of the package; a sealing resin that seals the opening of the package, and a protection element that is located on the first surface side of the lead arrangement that is exposed inside the opening of the package to protect the semiconductor light emitting element from a reverse voltage. A groove is provided on the first surface of the lead arrangement between a location that provides electrical connection with the protection element and the semiconductor light emitting element. The groove is independently formed so that its ends are spaced away from an exposed periphery of the lead arrangement that is exposed inside the opening of the package.

According to the semiconductor light emitting device in the first or tenth aspect of the present invention, the lead terminal smaller projection(s) is/are located between the pair of outer lead projections, and additionally the end surface(s) of the lead smaller projection(s) is adjusted whereby projecting less than the end surfaces of the outer lead projections. Thus, the lead terminal smaller projection(s) does/do not project outward of the outer lead projections. For this reason, even in the case where corners of the lead terminal smaller projection(s) are not rounded, the lead terminal smaller projection(s) can be less prone to damage to other members due to edged corners. Therefore, in mass-production processes of a number of semiconductor light emitting devices, it is possible to prevent damage even if the semiconductor light emitting devices come in contact with each other. In addition, according to the semiconductor light emitting device in the second aspect of the present invention, the corners of the outer lead projections are rounded, thus, even if these parts come in contact with other members, it is possible to reduce possibility of damage to them. In addition, according to the semiconductor light emitting device in the third aspect of the present invention, since the lead terminal smaller projection(s) does/do not project, even in the case where the corners of the lead terminal smaller projection(s) are not rounded but are edged, these parts can be less prone to cause damage. Therefore it is possible to save time and effort of processing the lead terminal smaller projection(s).

In addition, according to the semiconductor light emitting device in the fourth aspect of the present invention, since two lead terminal smaller projections are formed in each outer lead region, in production processes, the lead arrangement can be stably held. Additionally, each of the two lead terminal smaller projections is located between the middle outer lead projection and each of the end side outer lead projections, thus, even after production, these lead terminal smaller projections can be less prone to project outward of the outer lead regions. In addition, according to the semiconductor light emitting device in the fifth aspect of the present invention, a plurality of the outer lead projections have end surfaces that are substantially coplanar with each other, and a plurality of the lead terminal smaller projections have end surfaces that are substantially coplanar with each other, thus, this construction can provide an advantage in installation of the semiconductor light emitting device. In addition, according to the semiconductor light emitting device in the sixth aspect of the present invention, the protection film protects the lead arrangement, therefore, it is possible to prevent oxidation or the like. In the case where the lead terminal smaller projection is not protected by the protection film, this may cause poor adhesiveness due to corrosion. However, according to the semiconductor light emitting device in the seventh aspect of the present invention, since the end portion of the outer lead projection that is protected by the protection film has a large area, it is possible to maintain wettability of solder in installation, or the like, and thus to improve installation strength. As a result, it is possible to improve reliability. Therefore, it is possible to avoid problems due to exposure of side surfaces of the lead terminal smaller projection on which a protection film does not cover.

In addition, according to the semiconductor light emitting device in the eighth aspect of the present invention, the lead arrangement embedded in the package has a bent structure, thus, it is possible to improve engagement when the package is secured. Therefore, it is possible to improve adhesiveness.

In addition, according to the semiconductor light emitting device in the ninth aspect of the present invention, the bottom surface of the lead middle region is externally exposed, and is coplanar with the outer lead region, thus, the bottom surface of the lead middle region can be used as a terminal. Additionally, in the case where this part is coupled to a member with excellent thermal conductivity, it is possible to directly and outwardly dissipate heat generated by the light emitting element mounted on the lead middle region through the lead middle region.

Still furthermore, according to the semiconductor light emitting device in the eleventh aspect of the present invention, since a die-bonding material is diffused in a location where that provides electrical connection for the protection element on the lead arrangement, it is possible to prevent poor electrical conduction.

BRIEF DESCRIPTION OF THE DRAWINGS

FIG. **1** is a perspective view showing a semiconductor light emitting device according to a first embodiment;

FIG. **2** is a cross-sectional view showing a sate where the semiconductor light emitting device according to the first embodiment is secured on a mount body;

FIG. **3**(*a*) is a plan view showing a production method of a light emitting element according to the first embodiment, and FIG. **3**(*b*) is a cross-sectional view showing the light emitting element shown in FIG. **3**(*a*) taken along the line III-III';

FIG. **4** is a plan view showing a lead frame;

FIG. **5**(*a*) is a perspective view showing one process in the production method of the semiconductor light emitting device according to the first embodiment, and FIG. **5**(*b*) is a cross-sectional view showing the process shown in FIG. **5**(*a*) taken along the line V-V';

FIG. **6**(*a*) is a perspective view showing one process in the production method of the semiconductor light emitting device according to the first embodiment, FIG. **6**(*b*) is a perspective view of another process, and FIG. **6**(*c*) is a cross-sectional view showing the process shown in FIG. **6**(*b*) taken along the line VI-VI';

FIG. **7**(*a*) is a perspective view showing one process in the production method of the semiconductor light emitting device according to the first embodiment, and FIG. **7**(*b*) is a cross-sectional view showing the process shown in FIG. **7**(*a*) taken along the line VII-VII';

FIG. **8**(*a*) is a perspective view showing one process in the production method of the semiconductor light emitting device according to the first embodiment, FIG. **8**(*b*) is a cross-sectional view showing the process shown in FIG. **6**(*a*) taken along the line VIII-VIII', and FIG. **8**(*c*) is a plan view of another process;

FIG. **9**(*a*) is an enlarged principal part plan view showing one process in the production method of the semiconductor light emitting device according to the first embodiment, and FIG. **9**(*b*) is a perspective view showing another process;

FIG. **10** is an enlarged partial view of the semiconductor light emitting device;

FIG. **11** is an enlarged partial view of the semiconductor light emitting device;

FIG. **12** shows perspective views of a lens-attached semiconductor light emitting device according to a second embodiment, wherein FIG. **12**(*a*) is a perspective view as viewed from the top side, and FIG. **12**(*b*) is a perspective view as viewed from the bottom side;

FIG. **13** shows perspective views of a lens-attached semiconductor light emitting device according to a third embodiment, wherein FIG. **13**(*a*) is a perspective view as viewed from the top side, and FIG. **13**(*b*) is a perspective view as viewed from the bottom side;

FIG. **14** shows perspective views of the lens-attached semiconductor light emitting device according to a fourth embodiment, wherein FIG. **14**(*a*) is a perspective view as viewed from the top side, and FIG. **14**(*b*) is a perspective view as viewed from the bottom side;

FIG. **15** shows perspective views of the lens-attached semiconductor light emitting device according to a fifth embodiment, wherein FIG. **15**(*a*) is a perspective view as viewed from the top side, and FIG. **15**(*b*) is a perspective view as viewed from the bottom side;

FIG. **16** shows perspective views of a semiconductor light emitting device according to a sixth embodiment, wherein FIG. **16**(*a*) is a perspective view as viewed from the top side, and FIG. **16**(*b*) is a perspective view as viewed from the bottom side;

FIG. **17** is a perspective view showing a conventional LED light emitting device in one example;

FIG. **18** is a cross-sectional view showing the conventional LED light emitting device in one example;

FIG. **19** is a perspective view showing a conventional LED light emitting device in another example; and

FIG. **20** is a side view showing the conventional LED light emitting device in another example.

DETAILED DESCRIPTION OF THE PREFERRED EMBODIMENT

In this specification, a light emitting element is not limited to the designation, and refers to an element including a photoreceptor such as photodiode and CCD, and an optical element such as image pickup element.

First Embodiment

FIG. **1** is a perspective view showing a semiconductor light emitting device **1** according to a first embodiment. FIG. **2** is a cross-sectional view of the semiconductor light emitting device **1** of FIG. **1** taken along the line II-II'. The semiconductor light emitting device **1** according to the first embodiment is now schematically described with reference to FIGS. **1** and **2**. The semiconductor light emitting device **1** is provided with a package **2** that is mounted on lead arrangement **100**. The package **2** has space that is formed in a substantially recessed shape and opens upward. In addition, a plurality of light emitting elements **10** are mounted on an exposed part of the lead arrangement **100** inside the space of the package **2**. That is, the package **2** serves as a frame body that surrounds the light emitting elements **10**. Additionally, a protection element **5** such as Zener diode **5** is also mounted inside the opening space of the package **2**. The protection element **5** provides electrical conduction when a voltage higher than a regulation voltage is applied. On the other hand, the light emitting elements **10** are electrically connected to the lead arrangement through gold wire lines **3**, bumps or the like. Besides, the opening space of the package **2** is filled with a sealing resin **4**.

Description will be made for each member.

Light Emitting Element **10**

FIGS. **3**(*a*) and **3**(*b*) are views schematically showing the light emitting element **10**. FIG. **3**(*a*) is a plan view showing the light emitting element **10**. FIG. **3**(*b*) is a cross-sectional view showing the light emitting element **10** shown in FIG. **3**(*a*) taken along the line III-III'. A semiconductor light emitting element is suitably used as the light emitting element **10**. This type of semiconductor light emitting element has a semiconductor layer **12** that is epitaxially grown on a growth substrate **11**. A sapphire substrate can be given as an example of the growth substrate **11**. However, the growth substrate **11** is not limited to sapphire, but known members, such as spinel, SiC, GaN, and GaAs can be used. In addition, in the case where not an insulating substrate such as sapphire but a conductive substrate such as SiC, GaN, and GaAs is used, a p-electrode and an n-electrode can be opposed to each other.

The light emitting element **10** can include various materials, such as BN, SiC, ZnSe, GaN, InGaN, InAlGaN, AlGaN, BAlGaN, and BInAlGaN. Si, Zn, and so on, can be included in these elements as impurity elements and serve as the center of light emission. A nitride semiconductor (e.g., $In_xAl_yGa_{1-x-y}N$, where $0 \leqq x$, $0 \leqq y$, $x+y \leqq 1$ as a nitride semiconductor containing Al and Ga, or a nitride semiconductor containing In and Ga) and so on can be used as a material of a light emission layer. In addition, MIS junction, PIN junction, homo structure with pn junction, hetero structure, double-hetero structure, or the like, can be suitably used as the structure of the semiconductor layer. Additionally, various light-emission wavelengths can be selected depending on materials and mixed crystal ratios of semiconductor layer. Additionally, the semiconductor layer can have a single- or multi-quantum-well structure provided with thin layer(s) for quantum effect. In this case, it is possible to improve output power. The light emitting elements **10** can emit light from the ultraviolet range

to the visible range. In particular, it is preferable that the light emitting elements having a light emission peak wavelength in the proximity of the range between 350 nm and 550 nm are used. The light emitting elements preferably include light emission layers that can emit light with a light emission wavelength capable of exciting a phosphor material. This description will be made as exemplary light emitting elements **10** of nitride semiconductor light emitting elements. However, the light emitting elements **10** are not limited to nitride semiconductor light emitting elements.

The nitride semiconductor light emitting element **10** according to the first embodiment includes the semiconductor layer **12** that has an n-type layer **14**, an active layer **18** and a p-type layer **16**. The n-type layer **14**, the active layer **18** and the p-type layer **16** are formed of a nitride semiconductor, and are laminated in this order on the sapphire substrate **11**, as shown in FIG. **3**(*b*). An n-pad electrode **15** is formed on an exposed portion of the n-type semiconductor On the other hand, a p-pad electrode **17** is formed on a p-ohmic electrode (not shown). The n-pad electrode **15** and the p-pad electrode **17** are spaced away from each other on the line.

Lead Arrangement **100**

FIG. **4** is a plan view showing one production process of the semiconductor light emitting device **1** according to the first embodiment. A plurality of patterns of lead arrangement **100** are arranged in a matrix shape on the lead frame **110** made of a conductive material. That is, the lead frame **110** is processed (e.g., stamped) so that the patterns of lead arrangement **100** are connected as branches to frame-shaped lead runners **112** through lead connection portions **111**. The plurality of patterns of the lead arrangement **100** are processed at a time, and thus are formed into the semiconductor light emitting devices **1** through production processes described later. In a certain process, the plurality of patterns of the lead arrangement **100** are separated into individual semiconductor light emitting devices **1** by cutting the lead connection portions **111**.

FIG. **5**(*a*) is an enlarged perspective view of one of the patterns of lead arrangement **100** that are arranged in a matrix shape on the lead frame **110** of FIG. **4**. FIG. **5**(*b*) is a cross-sectional view of the lead arrangement **100** of FIG. **5**(*a*) taken along the line V-V'.

In the present invention, the lead arrangement **100** includes not only parts that are exposed outside the frame body but also parts that are located inside the frame body of the semiconductor light emitting device **1**, and serves as a core member. As shown in FIGS. **5**(*a*) and **5**(*b*), the lead arrangement **100** includes a lead middle region **101** that is located in a substantially middle part and is provided with the semiconductor light emitting elements **10** mounted thereon, lead peripheral regions **102** that are electrically connected to the light emitting elements **10**, lead bent regions **103** that are subjected to bending, and outer lead regions **104**. In addition, ends of the outer lead regions **104** include substantially rectangular projections that extend from the same plane as the outer lead regions **104**. These projections are referred to as outer lead projections **104***a*. In an example of FIG. **5**, three outer lead projections **104***a* are located in each of the right and left side outer lead regions **104**. That is, the three outer lead projections **104***a* includes edge-side outer lead projections **104***a* that are located on both edges of the outer lead region **104**, and a middle outer lead projections **104***a***1** that is located in the middle part and has a wider width. On the other hand, the outer lead region **104** is provided with the lead connection portions **111**. The patterns of lead arrangement **100** are connected to adjacent lead runners **112** through the lead connection portions **111** (FIG. **4**). Note that the lead middle region **101**, the lead peripheral regions **102**, the lead bent regions **103**, the outer lead regions **104**, the outer lead projections **104***a*, and the lead connection portions **111** are named for parts of the lead arrangement for sake of explanation, and in this embodiment all of them are unitarily formed of the same material. However, the positive and negative terminals in electrical connection regions of the lead arrangement will be electrically disconnected from each other.

The lead arrangement **100** has a top surface side (the upper surface side in FIG. **5**(*b*)) where the light emitting elements **10** are mounted, and a bottom surface side (the lower surface side in FIG. **5**(*b*)) opposed to the top surface side. The top surface of the lead middle region **101** is substantially coplanar with the top surfaces of the lead peripheral regions **102**. The lead bent regions **103** are bent at an incline toward the bottom surface side. Thus, the outer lead regions **104** are stepped down but in parallel to the top surface of the lead middle region **101** and the top surfaces of the lead peripheral regions **102**. That is, as shown in FIG. **5**(*b*), the top surfaces of the lead middle region **101** and the lead peripheral regions **102**, the top surfaces of the lead bent regions **103**, and the top surfaces of the outer lead regions **104** become lower in this order. In other words, the lead bent regions **103** serve to adjust the bottom surfaces of the outer lead regions **104** so as to be coplanar with the bottom surface of the lead middle region **101**. Thus, the lead bent regions **103** are bent at an incline. The bent angle of the lead bent regions **103** is adjusted by the level difference between the outer lead region **104** and the lead peripheral region **102**. The lead bent regions **103** can be formed by press work. The lead bent regions **103** are located inside the package **2** described later.

The light emitting elements **10** are mounted on and electrically connected to the bent lead arrangement **100** in a later process. However, the positive and negative terminals in electrical connection regions of the lead arrangement will be separated and isolated from each other, and thus are electrically disconnected to each other. In addition, the positive and negative terminals can be electrically connected to external terminals. The lead arrangement **100** can be formed of a material with good electrical conductivity such as copper, phosphor bronze, iron and nickel. In the first embodiment, copper is employed. In addition, it is preferable that only connection parts between the light emitting elements **10** and an external terminal are exposed on the lead arrangement **100**, and in order to prevent corrosion of metal, after bending, a noble metal such as silver, gold, palladium and rhodium is plated on the other parts of the lead arrangement. Note that parts other than the connection parts may be exposed to improve light reflectivity.

Package **2**

FIG. **6**(*a*) is a perspective view showing the package **2**. FIG. **6**(*b*) is a perspective view showing a state where the package **2** is secured to the lead arrangement **100**. FIG. **6**(*c*) is a cross-sectional view of the package **2** secured to the lead arrangement **100** taken along the line VI-VI' of FIG. **6**(*b*). As shown in FIG. **6**(*a*), the package **2** has the space and forms a frame body. The space opens upward and has a substantially inverted truncated cone shape. In order to mount the light emitting element **10** in a substantially middle part of this opening, the opening of the package **2** has a size larger than the light emitting element **10**. In addition, the size of the space is determined in terms of reflection angle when light from the light emitting elements **10** strikes the side of the space of the package **2**, light chromaticity distribution, later-described sealing resin that seals the opening, content and type of phosphor that is contained in the sealing resin, and so on. Accordingly, the space is not limited to a particular shape. Additionally, since the light emitting elements **10** are mounted in a

substantially middle part of this opening, depending on the size of this opening, the distance between the light emitting element **10** and the side surface of the space of the package **2** is determined. In the case where the distance between the light emitting element **10** and the side surface of the space of the package **2** is uniform, it is possible to prevent color unevenness. The reason is that, in this case, the distance of the sealing resin that fills this opening between the light emitting element **10** and the side surface is also uniform. Accordingly, this arrangement is suitable.

As package **2**, a high light resistant and transparent organic material such as silicone resin, epoxy resin, acrylic resin, urea resin, fluorocarbon resin and imide resin, and a high light resistant inorganic material such as glass and silica gel can be used. In addition, a thermosetting resin is used in order not to melt due to heat in production processes. Additionally, in order to relieve thermal stress of resin, various types of fillers such as aluminum nitride, aluminum oxide and mixture compound of them may be mixed. The package **2** is not limited to resin. A metal group material or a ceramic group material may be used as a part of package such as the interior side surface of the package **2**, or as the whole of package. In this case, it is possible to avoid deterioration of the package **2** due to light radiation by light emitting elements.

The package **2** is formed by casting. Specifically, a cavity of heating mold is filled with liquid intermediate resin, and the bent lead arrangement **100** is disposed at a predetermined position in the cavity at substantially the same time. Thus, as shown in FIGS. **6**(*b*) and **6**(*c*), the resin is formed in a predetermined shape and is fitted in projections and depressions in the bent lead arrangement **100**. Subsequently, the resin is cured by reaction such as heat reaction. Alternatively, the package **2** can be formed by transfer molding. The transfer molding is a thermosetting resin formation process that, after softening a thermosetting material such as non-flame-retarded resin in a heating pot, fills a cavity of heating mold with the thermosetting material and then cures the thermosetting material. As formation process of the package **2**, injection molding, extrusion, press work, and so on can be given as other examples. In terms of resin, characteristics of the frame fitted therein, formation shape and so on, the formation process can be determined. Besides, the package **2** may be independently formed, and then attached to the lead arrangement **100**.

To remove the formed package **2** from the cavity, the mold is opened, then the cured package **2** is ejected by an injector pin. Thus, the package **2** is removed from the mold. As shown in FIGS. **6**(*a*) and **6**(*b*), injector pin prints are formed at four corners of the removed package **2**.

After the lead arrangement **100** is partially bent and is plated, the thus-formed package **2** is fixed so as to fill depressed space in the lead arrangement **100**. As shown in FIG. **6**(*c*), the outer lead regions **104** that are coupled to the lead bent regions **103** thus extend outward from opposed sides of the package **2** in parallel to the top surface of the lead middle region **101**. In addition, the bottom surfaces of the outer lead regions **104** are substantially coplanar with the bottom surface of the lead middle region **101**. Additionally, the lead bent regions **103** are embedded inside the package **2**. The level difference that is produced by the bent parts of the lead bent region **103** provides good engagement between the lead arrangement **100** and the package **2**, and thus increases adhesive strength.

As shown in FIGS. **6**(*b*) and **6**(*c*), the side surface that defines the substantially inverted truncated cone shaped space inside the package **2** has a slant and a circular shape, and is provided with a projecting rib **2***a* that is formed on the upper part of the slant. The rib **2***a* increases adhesive strength between the sealing resin **4** and the package **2**, and provides an effect that prevents detachment of the sealing resin **4** from the package **2**. The opening of the package **2** is filled with the sealing resin **4** in a later process.

The lead middle region **101** and the lead peripheral regions **102** are located in the frame body of the package **2**. The top surfaces of them are exposed in the opening of the package **2**. The lead middle region **101** is provided with the light emitting elements **10** that are mounted thereon. The lead peripheral regions **102** are electrically connected to the light emitting elements **10**. In addition, as shown in FIG. **6**(*c*), the package **2** is formed so that the lead middle region **101** penetrates the package **2** in the top-and-bottom direction (in the top-and-bottom direction in FIG. **6**(*c*)). Thus, the bottom surface **101***a* of the lead middle region **101** is exposed outward. The exposed bottom surface **101***a* of the lead middle region **101** is located at one level lower than the bottom surface of the package **2**. Accordingly, when the bottom of the semiconductor light emitting device **1** is bonded on a separate conductive mount body (not shown), the exposed bottom surface **101***a* of the lead middle region **101** comes in flat contact with the mount body. As a result, heat generated by the light emitting elements **10** can be dissipated externally of the semiconductor light emitting device **1** through the lead arrangement **100** that has excellent thermal conductivity. Therefore, heat dissipation effect is improved. In order to further improve heat dissipation effect, it is preferable that the bottom surface **101***a* of the lead middle region is installed on the mount body by solder or the like.

Light Emitting Element **10**

FIG. **7**(*a*) is a perspective view showing the semiconductor light emitting device **1** with the electrically conducted light emitting elements **10** are mounted on the lead middle region **101**. FIG. **7**(*b*) is a cross-sectional view of the semiconductor light emitting device **1** of FIG. **7**(*a*) taken along the line VII-VII'. As shown in FIG. **7**(*a*), die-bonding resin such as epoxy resin, and bumps such as silver paste are applied in predetermined, exposed locations of the lead middle region **101** inside the inverted substantially inverted truncated cone shaped space of the package **2**. In addition, the light emitting elements **10** are bonded and mounted on the lead middle regions **101** in an electrical connected state. In the first embodiment, two light emitting elements **10** for each of three colors, total six elements are arranged in a matrix shape. However, color types, number, combination and arrangement can be arbitrarily selected. In this mounting process, as shown in FIG. **7**(*b*), the bottom surfaces of the light emitting elements **10** are preferably disposed in parallel to the top surface of the lead middle region **101**. The reason is to keep the light chromaticity distribution of the semiconductor light emitting device **1** in a predetermined state. On the other hand, a conductive material softer than the lead arrangement **100**, such as silver paste and Ag—Sn, can be given as a material of the bumps. Additionally, a bonding material such as AuSi, SnAgBi, SnAgCu, SnAgBiCu, SnCu, SnBi, PbSn, In and so on, and combination of them can also be used. A eutectic material is selected in accordance with wettability and bonding characteristics depending on materials to be bonded.

As shown in FIGS. **7**(*a*) and **7**(*b*), the lead peripheral regions **102** are disposed beside both sides of the lead middle region **101** on which the light emitting elements **10** are mounted. The n-pad and p-pad electrodes of the light emitting elements **10** shown in FIG. **3** are electrically connected to these lead peripheral regions **102**. The pad electrodes and the lead peripheral regions **102** are connected by wire-bonding with gold wire lines **3** in the first embodiment. However,

solder, gold bump that is ultrasonically bonded between the conductive pattern and the pad electrode, conductive paste such as gold, silver, palladium and rhodium, anisotropic conductive paste, gold wire, and so on can be also used. In addition, the lead peripheral regions **102** are coupled to the outer lead regions **104**. The outer lead regions **104** can be connected to external terminals (not shown) through bumps and so on. Thus, the light emitting elements **10** are electrically connected to the external terminals through the lead arrangement **100**. Additionally, a groove M is provided on the lead middle region **101** of the lead arrangement **100** between a location where the wire line such as gold wire line for the protection element **5** is bonded and a location where the light emitting elements **10** are mounted. Thus, the die-bonding material for mounting the light emitting elements **10**, or the like, can be prevented form reaching the bonding part for the protection element **5**. That is, even if the die-bonding material such as epoxy resin is diffused, it flows into and is guided along the groove M. Thus, this diffusion is limited. As a result, it is possible to ensure separation between the location where the wire line for the protection element **5** is bonded and the location where the light emitting elements **10** are mounted. Consequently, it is possible to prevent poor contact of wire line due to interference of the die-bonding material that prevents electrical connection, or the like. Note that, although the protection element **5** is mounted on the right-side lead peripheral region **102** in the example of FIG. (a), the protection element **5** is not limited to this arrangement. The protection element **5** may be mounted on the lead middle region **101** and connected to the lead peripheral region **102** through a wire line by wire-bonding. In this case, the groove M that is located between the light emitting element **10** and the protection element **5** can also prevent poor mount of the protection element **5** caused by the die-bonding material. The groove M can have arbitrary cross-sectional shape and depth. In the case of the first embodiment, the groove M has a straight shape as shown in FIG. **4** for example. In addition, the groove M has a V-shape in a cross-sectional view. In this case, the groove M can be easily formed. Additionally, the groove M is formed not necessarily to penetrate the lead arrangement **100**, but enough to be shallowly recessed. In the case where the groove M is shallowly recessed, in molding of the package resin **2**, resin can be less prone to flow into this part. Therefore, it is possible to reduce fraction defective. Additionally, the groove M is formed so that its ends are spaced away from an exposed periphery of the lead arrangement **100**, as shown in FIGS. **4** and **5**, for example. In other words, the ends of the groove M do not reach the exposed periphery of the terminal. In the case of FIG. **5**, the groove M is spaced away from the edge that separates the lead middle region **101** from the right-side lead peripheral region **102** and a part that opens beside the left side of the groove M in the lead middle region **101** so that the groove M does not communicate them. Accordingly, it is possible to avoid defectiveness caused by flowing of the package resin **2** into the groove M. In other words, if the groove M reaches and communicates with the edge of the terminal, a wide opening is formed in this part. In this case, resin tends to enter the groove M through the communication part in the terminal edge in injection molding, as a result, this resin that enters the groove M forms flash after molding of the resin and causes defectiveness. In the first embodiment, since the groove M is formed so that its ends are spaced away from the periphery of the terminal as shown in FIG. **7** for example, it is possible to prevent such defectiveness and additionally to effectively prevent short circuit and so on.

Protection Element

The protection element **5** is mounted on an exposed part of the lead peripheral region **102** in the space of the package **2** as shown in FIGS. **7**(*a*) and **7**(*b*). A Zener diode that becomes in a conductive state when a specified voltage or more is applied, a capacitor that absorbs a pulse voltage, and so on, can be used as the protective element **5**. The Zener diode has a p-type semiconductor region with a positive electrode, and an n-type semiconductor region with a negative electrode, and is electrically connected to the p-side and n-side electrodes of the light emitting elements **10** in reverse parallel relative to them. The negative and positive electrodes provided in the Zener diode are connected to external terminals through the lead arrangement **100**. Thus, when the ovevoltage is applied between the terminals, even if the voltage exceeds the Zener voltage of the Zener diode, the voltage between the positive and negative electrodes of the light emitting element **10** is held at the Zener voltage. Accordingly, the voltage does not exceed this Zener voltage. As a result, application of overvoltage to the light emitting element **10** can be prevented. Therefore, it is possible to protect the light emitting elements **10** from overvoltage, and to prevent damage to the elements and the deterioration of their performance. In addition, since all the light emitting elements **10** in the first embodiment are connected to the same lead peripheral region **102**, they are connected in a parallel arrangement. The protection element **5** is connected to this lead peripheral region **102**. Accordingly, only one protection element is provided. As a result, a parts count is reduced, therefore, it is possible to save time and effort, and to reduce cost.

Sealing Resin **4**

FIG. **8**(*a*) is a perspective view showing a production process of the semiconductor light emitting device **1** in the state where the space of the package **2** that opens upward is filled with a molding material. FIG. **8**(*b*) is a cross-sectional view of the semiconductor light emitting device **1** of FIG. **8**(*a*) taken along the line VIII-VIII'. FIG. **8**(*c*) shows a part of the lead frame **110** that connects a plurality patterns of the lead arrangement **100** in the state of FIGS. **8**(*a*) and **8**(*b*) with the lead connection portions **111**.

The light emitting elements **10** and the protection element **5** are secured in proper positions on the lead arrangement **100** in the opening of the package **2**, and are electrically connected. Subsequently, the opening space of the package **2** is filled with the sealing resin **4** as the molding member. Thus, it is possible to prevent short circuit of the wire lines **3**, and the p-pad and n-pad electrodes of the light emitting elements **10**. Thermosetting resin can be used for the sealing resin **4**. The opening of the package **2** is filled with the sealing resin **4** by potting. Thus, the opening is sealed. In addition, the opening can be sealed by injection molding with thermoplastic resin, or by transfer molding with thermosetting resin.

A material of the sealing resin **4** is not limited if it is transparent. A silicone resin composition, a denatured silicone resin composition or the like is preferably used. However, a transparent, insulating resin composition such as epoxy resin composition, denatured epoxy resin composition and acrylic resin composition or the like may be used. A silicone resin, an epoxy resin, a urea resin, a fluorocarbon resin, a hybrid resin containing at least one resin selected from the group consisting of them, and so on can be used as sealing resin **4** with weather resistance. In addition, the sealing resin is not limited to an organic material. A high light resistant inorganic material such as glass and silica gel can be used. Additionally, the sealing resin **4** can be formed in a desired shape on the light emission side to provide a lens effect. In this case, light from the light emitting chips can be

focused. In the case where a photoreceptor is used as a semiconductor element, the sealing resin **4** through which light passes is formed so that the light is focused toward the photoreceptor and thus is incident on the photoreceptor. In this case, it is possible to improve sensitivity of photoreceptor device. Specifically, the sealing resin **4** can have a convex lens shape, a concave lens shape, an ellipse shape as viewed from the light observation surface side, or a combination shape of two or more types of them. In the first embodiment, a silicone resin is employed as the molding member.

In addition, the sealing resin **4** preferably has adhesiveness. In the case where the sealing resin **4** has adhesiveness, it is possible to improve adhesion between the light emitting element **10** and the lead middle region **101**. The resin that has adhesiveness includes not only a material that provides adhesiveness at room temperature, but also a material that provides adhesiveness when predetermined heat and pressure are applied to the sealing resin **4**. Additionally, in order to improve adhesive strength of the sealing resin **4**, in addition to applying of heat or pressure, it can be dried.

Wavelength Conversion Layer

In the case the sealing resin **4** is mixed with a wavelength conversion member such as phosphor material that is excited by light from the light emitting elements **10** and emits luminescent radiation, the light from the light emitting elements **10** is converted to light with different wavelength, thus, it is possible to emit mixture light of the light from the light emitting elements **10** and the light with wavelength converted by the wavelength conversion member. A phosphor can be suitably used as the wavelength conversion member.

It is preferable that a phosphor material that is mixed as necessary is mixed uniformly at a substantially constant ratio in the sealing resin **4**. On the other hand, a phosphor material can be unevenly mixed so as to partially exist. For example, a phosphor material is distributed so that much of the phosphor material is included on the exterior surface side of the sealing resin **4**. In this case, much of the phosphor material is spaced away from a contact surface between the light emitting element **10** and the sealing resin **4**, thus, heat generated by the light emitting element **10** is less prone to conducted to the phosphor material. Therefore, it is possible to suppress deterioration of the phosphor material.

Zinc cadmium sulfide activated by copper, and a YAG group phosphor activated by cerium can be given as typical phosphors. Particularly, in use under high luminance conditions and for a long time, it is preferable that $(Re_{1-x}Sm_x)_3(Al_{1-y}Ga_y)_5O_{12}$:Ce (where, $0 \leqq x \leqq 1$, $0 \leqq y \leqq 1$, and Re is at least one element selected from the group consisting of Y, Gd, La, and Lu), or the like, is employed.

In the light emitting apparatus according to this embodiment of the present invention, as for the phosphor, two or more kinds of phosphors may be mixed. That is, the wavelength components of RGB can be increased by mixing two or more kinds of phosphors of $(Re_{1-x}Sm_x)_3(Al_{1-y}Ga_y)_5O_{12}$:Ce with different contents of Al, Ga, Y, La, Lu, Gd, and Sm. In addition, the reddish component can be increased by using a nitride phosphor with yellow to red light emission, thus, it is possible to provide lighting with high general color rendering index Ra, or an LED with electric bulb color. Specifically, adjusting the amount of phosphor with a different chromaticity point on the chromaticity diagram of CIE depending on the light-emission wavelength of light emitting element can provide light emission of arbitrary point on the chromaticity diagram on the line connected between the phosphor and the light emitting element.

As for the thus-formed phosphor, a luminescent layer consisting of one layer on the surface of light emitting element may includes two or more kinds of the phosphors. Optionally, in the case where a luminescent layer consists of two layers, each layer can include one or two kinds of phosphors. In this case, it is preferable that the phosphors are uniformly distributed in the respective layers in the sealing resin **4**. Thus, the wavelength conversion layer can uniformly convert irrespective of portions thereof. Therefore, it is possible to the provide uniform mixture light without unevenness.

Diffusion Agent etc.

A proper material such as viscosity adjusting agent, light diffusion agent, pigment, and phosphor material can be added to the sealing resin **4** depending on applications. Barium titanate, titanium oxide, aluminum oxide, silicon oxide, silicon dioxide, heavy calcium carbonate, light calcium carbonate, a mixture containing at least one kind of them, and so on can be given as light diffusion agent. In this case, it is possible to provide a light emitting apparatus with excellent characteristics of directivity. Similarly, various types of coloring agents can be added as filter material that provides a filter effect that cuts off external incident light and light from the light emitting elements with unnecessary wavelength.

In this specification, the diffusion agent refers to a material that has a center particle size not less than 1 nm to less than 5 μm. The diffusion agent of not less than 1 nm to less than 5 μm excellently scatters light from the light emitting elements **10** and phosphor material, and thus suppresses color unevenness that tends to appear in the case where a phosphor material with a large particle size is used. For this reason, this type of diffusion agent is suitably used. In addition, the spectral half-value width in light emission can be narrow. Therefore, it is possible to a light emitting device with high color purity. A diffusion agent of not less than 1 nm to less than 1 μm has a small interference effect on the wavelength of light from the light emitting elements **10**, but has high transparency, and additionally can increase viscosity of resin without reduction of luminous intensity.

Filler

Furthermore, a filler can be added to the sealing resin **4** in addition to a phosphor material. Specifically, materials similar to the diffusion agent can be used as a material of the filler. But, the filler has a center particle size different from the diffusion agent. In this specification, the filler preferably has a center particle size of not less than 5 μm to not more than 100 μm. In the case where the sealing resin **4** contains this type of filler, chromaticity unevenness of the light emitting device can be improved by light dispersion, and additionally thermal shock resistance of the sealing resin **4** can be improved. Accordingly, it is possible to provide a highly reliable light emitting device that can prevent disconnection of wire lines that connect light emitting elements and external terminals, detachment of the bottom surfaces of the light emitting elements from the bottom surface of the recessed portion of the package, and so on, even in use under high temperature. Additionally, the resin can be adjusted so as to have constant flowability for a long time. As a result, the sealing resin can be formed in a desired location. Therefore it is possible to mass-produce the light emitting devices at high yield.

Thickness

Alternatively, the sealing resin may not fill the whole opening of the package **2**, but a thin phosphor-containing-resin layer (not shown) may be formed so as to cover only the periphery of the light emitting element **10**. In this case, the thickness of the resin layer on the upper and side surfaces of the tight emitting element **10** should be substantially uniform. In the case where the thickness of the resin layer on the upper and side surfaces is uniform, it is possible to provide excellent directivity characteristics In addition, in the case where the

thickness of the resin layer on the upper and side surfaces is substantially uniform, it is possible to provide high quality light emission in which light chromaticity distribution unevenness is reduced. Additionally, since the phosphor-containing-resin layer is thin, the density of a phosphor material is increased, and distribution unevenness due to sedimentation of a phosphor material can be reduced. Therefore, it is possible to provide an effect that more uniformly emits light. The thickness of the sealing resin **4** is determined depending on space between opening region that opens in the package **2** and the light emitting element **10**. It is preferable that the thickness is 10 to 50 μm, more preferably 20 to 40 μm, and most preferably about 30 μm.

Cut Process for Lead Connection Portion

As shown in FIGS. **8**(*a*) and **8**(*b*), in the semiconductor light emitting device **1** in the state where the space of the package **2** is filled with the sealing resin **4**, the outer lead regions **104** are located external of the frame body of the package **2**. In addition, the outer lead regions **104** extend in substantially coplanar with the bottom surface of the package **2**. The ends of the outer lead regions **104** have substantially rectangular projections and depressions as viewed from the top surface side. The outer lead projections **104***a* correspond to projections. Additionally, the lead connection portions **111** are interposed between a plurality of the outer lead projections **104***a*.

FIG. **8**(*c*) shows a part of the lead frame **110** in which a plurality of semiconductor light emitting devices **1** in the state where it is filled with the sealing resin **4** are arranged in a matrix shape in a production process of the semiconductor light emitting device **1**. That is, FIGS. **8**(*a*) and **8**(*b*) correspond to enlarged, partial views of FIG. **8**(*c*). As shown in FIG. **8**(*c*), semiconductor light emitting devices **1** are connected to adjacent lead runners **112** through the lead connection portions **111** that extend from the side surfaces of the outer lead regions **104**. A lead connection portion **111** can be disposed at one location, alternatively lead connection portions **111** can be disposed at two or more locations on the side surface of the outer lead region **104**. Irrespective of their locations they are disposed between the outer lead projections **104***a*.

The lead connection portions **111** in the state shown in FIG. **8**(*c*) are cut for separation into individual semiconductor light emitting devices **1**. FIG. **9**(*a*) shows the lead frame **110** with lead connection portions partially remaining therein after the semiconductor light emitting devices **1** are cut off from the lead frame **111**. FIG. **9**(*b*) shows one semiconductor light emitting device that is cut off as a chip. As shown in FIG. **9**(*b*), in the outer lead regions **104** of the semiconductor light emitting device **1** of chip, cut-off lead connection portions **111** remain in a projection shape. As a result, the number of projections increases. The projections corresponding to the increased number are referred to as lead terminal smaller projections **111***a*. The lead terminal smaller projections **111***a* are projection parts that are formed by parts of the lead connection portions **111** that remain on the outer lead regions **104**, after the lead connection portions **111** that connects a plurality of patterns of the lead arrangement **100** are cut off. Thus, the lead terminal smaller portions **111***a* are interposed between the plurality of the outer lead projections **104***a*. That is, the lead terminal smaller portions **111***a* do not form edge-side projections **105** (projections at four corners in FIG. **9**(*b*)) of a plurality of projections that are formed on the end surface part of the outer lead region **104**. The outer lead projections **104***a* forms at least the edge-side projections **105**.

As discussed later, cut surfaces of the lead connection portions **111** are not subjected to plating that prevents corrosion of metal. On the other hand, the outer lead projections **104** are subjected to plating that prevents corrosion of metal, and thus has good wettability. Since the edge-side projections **105** in the outer lead regions that are subjected to plating are located at the four corners of the semiconductor light emitting device **1** as shown in FIG. **9**(*b*), even though the cut surfaces of the lead connection portions **111** have poor adhesiveness, this construction can provides an effect of high adhesiveness between the semiconductor light emitting device **1** and a mount body (not shown) with solder or the like.

FIG. **10** is an enlarged, perspective view of the outer lead region **104** in the semiconductor light emitting device **1** that is separated by cutting the lead connection portions **111**. As shown in FIG. **10**, in the outer lead region **104** of the semiconductor light emitting device **1** according to the first embodiment, the lead terminal smaller projections **111***a* that form the projections on the end surface thereof are interposed between the outer lead projections **104***a*. In addition, a length d**1** from the bottom of the rising edge that forms a rectangular shape to the end surface in the lead terminal smaller projection **111***a* is shorter than a length d**2** from the bottom of the rising edge that forms rectangular shape to the end surface in the outer lead projection **104***a* (d**1**<d**2**). That is, the lead terminal smaller projections **111***a* are recessed toward the package **2** side relative to the outer lead projections **104***a*. The plurality of the outer lead projections **104***a* preferably have the same length d**2**, but may have different lengths. However, the length of the outer lead projections **104***a* that interpose the lead terminal smaller projection **111***a* have a length longer than the length of the lead terminal smaller projection **111***a* adjacent to them.

In addition, corners that form rectangular parts of the outer lead projections **104***a* are rounded and have arc shapes. On the other hand, corners that form rectangular parts of the lead terminal smaller projections **111***a* are not rounded and have a substantially edged right angle. The reason is that the corners are produced by cutting the lead connection portions **111** in a direction perpendicular thereto. Additionally, a width w**1** of the lead terminal smaller portion **111***a* is smaller than a width w**2** of the outer lead projection **104***a* (w**1**<w**2**). Thus, the lead terminal smaller projections with smaller width and shorter length are interposed between the plurality of the outer lead projections **104***a*. This arrangement prevents lead cut surfaces **111***b* of the lead terminal smaller portions **111***a* from being exposed outward. This construction can mainly have the following advantages.

1. In the lead cut surfaces **111***b*, the area of a part where metal is corroded can be reduced, thus, it is possible to avoid poor electrical conduction.
2. It is possible to avoid that the sharp edges of the lead cut surfaces **111***b* damage other semiconductor light emitting devices **1**.
3. A blade that cuts off the lead connection portion **111** can be small.
4. A process that bends a lead terminal can be omitted.
5. In this construction, since the lead terminals do not extend along the side surface of the frame body that composes the semiconductor light emitting device **1**, the semiconductor light emitting device **1** can be thin.
6. Since the lead terminals are not required to have a length enough to be bent, the lead arrangement can be small. Accordingly, the plurality of patterns of the lead arrangement can be arranged in one sheet of lead frame to minimize waste. Therefore, it is possible to improve productivity.

The aforementioned advantages will be described in more detail. The outer lead regions **104** compose part of the lead

arrangement **100**. Accordingly, their surfaces are covered by a protection film to prevent corrosion of metal in a prior process. For example, silver is plated thereon. The plated lead arrangement **100** is less prone to be oxidized by air, and thus is prevented from corrosion of metal. In addition, silver has good wettability, and thus can provide electrical adhesiveness between the lead arrangement **100** and a separate mount body with solder or the like. After silver is plated, the lead connection portions **111** are cut off. As a result, silver is not plated on the lead cut surfaces **111***b* as cut surfaces of the lead connection portions **111**. Accordingly, the lead cut surfaces **111***b* may be oxidized by air or the like. The lead cut surfaces **111***b* that are oxidized by air cause rust and poor electrical conduction. In addition, an oxidized part has poor wettability, and thus causes poor electrical or mechanical connection. Additionally, as discussed above, since the cut surfaces are sharp, through production processes of the semiconductor light emitting device **1**, the cut surfaces may damage other semiconductor light emitting devices **1** and so on. For this reason, in order to minimize the areas of the cut surfaces and to reduce exposure of them, the width w**1** of the lead terminal smaller projections **111***a* is small, and the lead connection portions **111** are cut off so that the length d**1** is short. Consequently, it is possible to avoid concerns about the lead cut surface **111***b*. Besides, the lead connection portions **111** serves to hold the lead frame **110** adjacent to them in production processes. In addition, the semiconductor light emitting devices **1** are subjected to a process that secures the packages **2**, a process that mounts the light emitting elements **10** on the lead arrangement by die-bonding, and a process that fills the sealing resin **4** in the openings of the packages **2** until the lead connection portions **111** are cut off. From these points of view, the length, width and number of the lead connection portions **111** are determined in consideration of mechanical strength that can bear the load applied to the lead arrangement through the production processes and can effectively arrange patterns of the lead arrangement in the frame.

Furthermore, since the width w**1** of the lead terminal smaller projection **111***a* and the area of the cut surface **111***b* are small, a blade that cuts off the lead connection portion **111** can be small. However, as discussed above, the lead terminal smaller portions **111***a* are interposed between the plurality of the outer lead projections **104***a*. In this case, if the interval between the plurality of the outer lead projections **104***a* is narrow, the blade that cuts off the lead connection portion **111** may come in contact with the outer lead projection **104***a*. On the other hand, if the interval between the plurality of the outer lead projections **104***a* is too wide, other semiconductor light emitting devices **1** as chips may be caught between the outer lead projections **104***a*. In this case, the lead cut surface **111***b* may cause damage. From this point of view, the intervals among the plurality of the outer lead projections **104***a* and the lead terminal smaller portions **111***a* are determined.

In a conventional LED light emitting device, the outer lead region **104** or the lead terminal smaller projection **111***a* is used as a lead terminal. That is, as shown in FIG. **17**, a lead terminal **205***a* is bent so as to extend along the side surface and the bottom surface of a frame body **206** of an LED light emitting device **200**. The lead terminal **205***a* that is bent toward the bottom surface side and a mount body **201** are electrically bonded through solder or the like. Thus, an LED element **203** in the LED light emitting device **200** is electrically connected to external terminals. Accordingly, the lead terminal **205***a* (that corresponds to the outer lead region **104** or the lead terminal smaller projection **111***a* in the first embodiment) necessarily has a length that reaches at least the bottom surface of the LED light emitting device **200** through the side surface.

On the contrary to this, in the semiconductor light emitting device **1** according to the first embodiment, the outer lead region **104** is short. Accordingly, dissimilarly to this conventional example, the outer lead region **104** cannot be bent so as to extend along the side surface and the bottom surface of a frame body of the semiconductor light emitting device **1**. However, the outer lead regions **104** according to the first embodiment project outward from the sides of the bottom surface of the semiconductor light emitting device **1** in coplanar with the bottom surface of the semiconductor light emitting device **1** as shown in FIG. **2**. In other words, the bottom surface of the outer lead region **104** is coplanar with the bottom surface of the frame body of the semiconductor light emitting device **1**. In addition, the bottom surface also serves as a terminal. Thus, when the semiconductor light emitting device **1** is installed on the mount body **20**, the bottom surface of the outer lead region **104** comes in contact with the mount body **20**. The bottom surface of the outer lead region **104** is mechanically and electrically connected to the mount body **20** with silver paste, solder or the like. As a result, the light emitting elements **10** on the lead arrangement are electrically connected to external terminals. That is, the outer lead region **104** serves as a lead terminal in the case of the conventional example. Accordingly, a process that bends the lead connection portions **111** is omitted. Additionally, it is possible to avoid metal stress on the lead connection portions **111** that is produced by bending. If the lead terminal is bent so as to extend along the side surface and to turn a corner toward the bottom of the semiconductor light emitting device, the semiconductor light emitting device **1** becomes tall. The semiconductor light emitting device **1** according to the first embodiment can also avoid this problem. Moreover, since the lead terminals are not required to have a length enough to be bent, the lead arrangement can be compact. Accordingly, the plurality of lead arrangement patterns can be arranged in one sheet of lead frame to minimize waste. Therefore, it is possible to improve productivity.

In the case where the aforementioned short outer lead region **104** that is not required to be bent is formed, if the area of the lead cut surface **111***b* is large, metal is easily corroded, thus, conductivity decreases. In addition, a defect due to edged corners of cut surface in the case of FIG. **19** still exists. However, in the semiconductor light emitting device **1** according to the first embodiment, since the lead cut surface **111***b* is less prone to be exposed, it is possible to avoid the above defect.

Furthermore, FIG. **11** is an enlarged, perspective view showing an outer read region **404** that has rectangular projections different from the foregoing projections. A semiconductor light emitting device **1***a* has the same construction and is formed in the same manner as the semiconductor light emitting device **1** except that the outer lead region has a different shape. In edges of the outer lead region **404** of this semiconductor light emitting device **1***a*, only corners of the outer lead projections **404***a* on the edge sides are rounded. That is, in a formation process of lead arrangement, only the corners on the edge sides in a plurality of the outer lead projections **404***a* are required to be rounded. Accordingly, it is possible to save time and effort that round a middle outer lead projection **404***a***1**, and so on. In particular, since the corners on the edge sides of the outer lead projections **404***a* that are prone to come in contact with other semiconductor light emitting devices are

rounded, it is possible to reduce damage to other semiconductor light emitting devices caused by the outer lead projections **404***a*.

On the other hand, the mount body **20** that is provided with the semiconductor light emitting device **1** is formed of a base mount with predetermined patterns disposed thereon. The base mount is made of an insulating material such as glass epoxy lamination board, liquid crystal polymer board, polyimide resin board and ceramic board. The predetermined patterns are arranged in portions to be connected to the lead arrangement **100**. Alternatively, a sub-mount board may be used as mount body **20** to secure the semiconductor light emitting device **1**. In this case, the sub-mount board is interposed between the semiconductor light emitting device **1** and another mount body.

Furthermore, as shown in FIG. **2**, the bottom surface of the lead middle region **101** is externally exposed, and forms a part of the bottom surface of the semiconductor light emitting device **1**. The lead middle region **101** is provided with the light emitting elements **10** mounted thereon. That is, when the semiconductor light emitting device **1** is bonded on the mount body **20**, the bottom surface **101***a* of the lead middle region **101** comes in flat contact with the mount body **20**. Accordingly, in the case where an excellent thermal conductive material is used for the mount body **20**, heat generated in light emission of the light emitting elements **10** is directly conducted to the mount body **20** through the lead middle region **101**, and thus is dissipated external of the semiconductor light emitting device **1**. Thus, heat generated by the light emitting elements is prevented from being stored in the semiconductor light emitting device **1**. Consequently, it is possible to increase life of the semiconductor light emitting device **1**.

Still furthermore, the bottom surface **101***a* of the lead middle region **101** provides stable adhesiveness between the semiconductor light emitting device **1** and the mount body **20**. Thus, the semiconductor light emitting device **1** is prevented from being installed on the mount body **20** at an incline. Therefore, it is possible to avoid deviation of the reach of light.

Second Embodiment

FIG. **12** shows a lens-attached semiconductor light emitting device **1***b*. FIG. **12**(*a*) is a perspective view showing the lens-attached semiconductor light emitting device **1***b* as viewed from the top side. FIG. **12**(*b*) is a perspective view showing the lens-attached semiconductor light emitting device **1***b* as viewed from the bottom side. The lens-attached semiconductor light emitting device **1***b* is similar to the semiconductor light emitting device **1** or **1***a* according to the first embodiment except that a dome-shaped lens **22** is additionally attached on the light emission surface side. The dome-shaped lens has a dome shape such as hemisphere. The members same as the semiconductor light emitting device **1** or **1***a* according to the first embodiment can be used except for this lens.

As shown in FIG. **12**(*a*), the dome-shaped lens **22** according to this second embodiment is attached so as to cover the light emission surface, i.e., an upper middle part of the semiconductor light emitting device **1** in FIG. **12**(*a*). In addition, the bottom of the dome-shaped lens **22** is secured by a lens mount **23**. The lens mount **23** has the area substantially same as the top surface of the package **2** of the semiconductor light emitting device **1**. The lens mount **23** additionally includes projections at four corners on the contact surface side to be in contact with the semiconductor light emitting device **1**. Particularly in the case where the projections of the lens mount **23** have a shape that can be fitted in a recessed portion of the injector pin print **21**, it is possible to provide strong connection by using stepped parts of the recessed portions that are formed in the injector pin prints **21**. The injector pin prints **21** are produced at four corners of the package resin **2**, when the package resin **2** is formed by casting, as shown in FIG. **1**. Note that the dome-shaped lens **22** may be formed unitarily with the lens mount **23**. In this case, it is possible to reduce the parts count of the lens-attached semiconductor light emitting device **1***b*.

In the case where the dome-shaped lens **22** is attached to the semiconductor light emitting device **1**, the light outgoing efficiency of the semiconductor light emitting device **1** is improved. The reason is that, when light from light source enters the dome-shaped lens **22** that covers the middle part of the semiconductor light emitting device **1**, the total internal reflection angle of light can be large.

Third Embodiment

FIG. **13** shows another lens-attached semiconductor light emitting device **1***c*. FIG. **13**(*a*) is a perspective view showing the lens-attached semiconductor light emitting device **1***c* as viewed from the top side. FIG. **13**(*b*) is a perspective view showing the lens-attached semiconductor light emitting device **1***c* as viewed from the bottom side. The semiconductor light emitting device **1***c* is similar to the semiconductor light emitting device **1** or **1***a* according to the first embodiment except that a Fresnel lens **24** is additionally attached on the light emission surface side. The Fresnel lens has concentrically narrow circular stepped lens setbacks that are divided from a convex surface of planoconvex lens, and has a small thickness but provides a thicker convex lens function. The members same as the semiconductor light emitting device **1** or **1***a* according to the first embodiment can be used except for this lens.

Similarly to the second embodiment, the Fresnel lens **24** includes projections at four corners on the contact surface side to be in contact with the semiconductor light emitting device **1**. The projections can be fitted into the recessed portions of the package resin **2**. In the lens-attached semiconductor light emitting device **1***c* that is provided with the Fresnel lens **24** attached thereto, the light source is arranged at a focus distance of the Fresnel lens **24**. Light emitted from the light source passes through the Fresnel lens **24** and outgoes as parallel light. That is, light emitted from the point-source light is finely converted into parallel light. Thus, a point light source can effectively emits light frontward. Consequently, it is possible to improve light outgoing efficiency of the semiconductor light emitting device **1**.

As discussed in the second and third embodiments, it is possible to easily attach the lens and lens mount on an upper part of the semiconductor light emitting device **1** or **1***a* by using the injector pin prints **21** of the package resin **2**. A lens that is attached to the semiconductor light emitting device **1** or **1***a* is not limited to a Fresnel lens and a dome-shape lens. Various types of lenses can be used. In addition, since each of the lens-attached semiconductor light emitting devices **1***b* and **1***c* according to the second and third embodiments includes the outer lead region **104** same as the semiconductor light emitting device **1** or **1***a* according to the first embodi-

ment, needless to say, each of them has advantages discussed above such as an advantage that can reduce a corrosion area of metal.

Fourth Embodiment

FIG. **14** shows another lens-attached semiconductor light emitting device **1***d*. FIG. **14**(*a*) is a perspective view showing the lens-attached semiconductor light emitting device **1***d* as viewed from the top side. FIG. **14**(*b*) is a perspective view showing the lens-attached semiconductor light emitting device **1***d* as viewed from the bottom side. The semiconductor light emitting device **1***d* includes a package resin **2***d* different from that of the first embodiment. The package resin **2***d* has an opening with a circular periphery. The opening has a recessed shape as viewed in a cross-sectional shape and is disposed in an octagonal frame. Light emitting elements are disposed on the bottom of the opening. In addition, the package resin **2***d* has a substantially rectangular parallelepiped shape that has a pair of opposed shorter sides and a pair of opposed longer sides. Outer lead regions **104** project outward of the pair of longer sides in the package resin **2***d*. The outer lead regions **104** have a shape similar to the outer lead regions **104** in the first embodiment. Accordingly, as discussed above, the lens-attached semiconductor light emitting device **1***d* has the advantages that are provided by using the outer lead regions with this shape.

Fifth Embodiment

FIG. **15** shows another lens-attached semiconductor light emitting device **1***e*. FIG. **15**(*a*) is a perspective view showing the lens-attached semiconductor light emitting device **1***e* as viewed from the top side. FIG. **15**(*b*) is a perspective view showing the lens-attached semiconductor light emitting device **1***e* as viewed from the bottom side. The lens-attached semiconductor light emitting device **1***e* includes a semiconductor light emitting device and a package resin **2***d* similar to the fourth embodiment. Outer lead regions **104** in this fifth embodiment project outward of a pair of shorter sides in the package resin **2***d*. The outer lead regions **104** have a shape similar to the outer lead regions **104** in the first embodiment. Accordingly, the lens-attached semiconductor light emitting device **1***d* has the aforementioned advantages that are provided by using the outer lead regions with this shape. In other words, the shape of the package resin **2** that is secured to a lead arrangement is not limited, and various types of shapes can be used, if the outer lead regions **104** that project from side surfaces of the package resin **2** have a shape shown in the description in the first embodiment.

Sixth Embodiment

Moreover, FIG. **16** shows still another LED light emitting device **1***f*. FIG. **16**(*a*) is a perspective view showing the semiconductor light emitting device **1***f* as viewed from the top side. FIG. **16**(*b*) is a perspective view showing the semiconductor light emitting device **1***f* as viewed from the bottom side. The semiconductor light emitting device **1***f* has a lens **25** that is attached on the top side of light emission surface. A dome-shaped lens, a Fresnel lens discussed in the foregoing embodiments, or various types of lenses other than them can be used as the lens **25**. Note that lens **25** can be omitted, and only semiconductor light emitting device can be used. In addition, in a rectangular-shaped package resin **2***f* that composes the semiconductor light emitting device **1***f*, the shape of opening is not limited to a substantially octagonal illustrated above. Various types of shapes such as quadrangle and circle can be used.

As shown in FIGS. **16**(*a*) and **16**(*b*), two outer lead regions **104** in the semiconductor light emitting device **1***f* according to this sixth embodiment are spaced away from each other on each of arbitrary opposed surfaces of the package resin **2***f*. The outer lead regions **104** project from parts in proximity to lower end of each of the opposed surfaces. The surfaces that are provided with the outer lead regions **104** are limited to neither longer nor shorter sides that define the rectangular shape of the package resin **2***f*. In the semiconductor light emitting device **1***f* according to this sixth embodiment, two outer lead regions **104** project from the bottom sides of the opposed surfaces that define longer sides of the package resin **2***f*, and are located in proximity to the corners. This arrangement can provide stable adhesiveness between the semiconductor light emitting device and a mount body on which the semiconductor light emitting device is installed. Note that the number of the outer lead regions **104** that are disposed on each surface is not limited to two, but can be three or more. In this case, the outer lead regions are preferably spaced away from each other at a substantially constant interval. The shape of the outer lead regions **104** is similar to that in the first embodiment. This shape provides the aforementioned advantages.

A light emitting device according to the present invention and a method for producing it can be applied to a light source for lighting, an LED display, a back light source, a signal light, an illuminated switch, various sensors, and various indicators, and so on.

It should be apparent to those with an ordinary skill in the art that while various preferred embodiments of the invention have been shown and described, it is contemplated that the invention is not limited to the particular embodiments disclosed, which are deemed to be merely illustrative of the inventive concepts and should not be interpreted as limiting the scope of the invention, and which are suitable for all modifications and changes falling within the spirit and scope of the invention as defined in the appended claims.

The present application is based on Application No. 2006-131915 filed in Japan on May 10, 2006, No. 2006-247359 filed in Japan on Sep. 12, 2006, and No. 274724-2006 filed in Japan on Oct. 6, 2006, the contents of which are incorporated herein by reference.

What is claimed is:

1. A light emitting device comprising:

conductive lead arrangement that has a first surface and a second surface opposed to the first surface;

a package that covers at least the first surface side of the lead arrangement and has an opening recessed as viewed in a cross-section, the opening being formed so that the first surface is partially exposed in the bottom of the opening;

a semiconductor light emitting element that is thermally conducted to and secured on the first surface of the lead arrangement in the bottom of the opening of the package; and

a sealing resin that seals the opening of the package, wherein

both ends of the lead arrangement project outward from side surfaces of the package to form outer lead regions, wherein

each of the outer lead regions includes a pair of outer lead projections and lead terminal smaller projection(s) that is/are located between the outer lead projections, the outer lead projections and lead terminal smaller projection(s) projecting outward, wherein

adjustment is made to the projection amount(s) of end surface(s) of the lead smaller projection(s) lying in a plane perpendicular to a longitudinal direction of the lead arrangement, whereby the end surface(s) projecting less than end surfaces of the outer lead projections.

2. The light emitting device according to claim **1**, wherein each of the pair of outer lead projections projects outward so that its side surface parallel to the longitudinal direction of the lead arrangement is substantially coplanar with the outer lead region, and a corner of each outer lead projection where the side surface and the end surface intersect each other is rounded.

3. The light emitting device according to claim **1**, wherein the end surface of the lead terminal smaller projection has edged corners.

4. The light emitting device according to claim **1**, wherein a protection film covers the surface of the lead arrangement that is externally exposed except the end surfaces of a plurality of the lead terminal smaller projections.

5. The light emitting device according to claim **1**, wherein the total areas of end surfaces of a plurality of the outer lead projections is greater than the total area of end surface(s) of the lead terminal smaller projection(s).

6. The light emitting device according to claim **1**, wherein the lead terminal region is provided with three outer lead projections and two lead terminal smaller projections, wherein the three outer lead projections include the pair of the outer lead projections that are located on the both sides of the outer lead region, and a middle outer lead projection that is located between the end side outer lead projections, wherein each of the two lead terminal smaller projections is located between the middle outer lead projection and each of the end side outer lead projections.

7. The light emitting device according to claim **6**, wherein a plurality of the outer lead projections have end surfaces that are substantially coplanar with each other, wherein a plurality of the lead terminal smaller projections have end surfaces that are substantially coplanar with each other.

8. The light emitting device according to claim **1**, wherein the lead arrangement includes

a lead middle region that is located in a middle part in the longitudinal direction and is provided with the semiconductor light emitting element mounted on the first surface,

lead peripheral regions that are located beside the lead middle region and substantially coplanar with the lead middle region,

the outer lead regions that are located on the both ends and project from the side surfaces of the package, the outer lead regions being in parallel to but not lying in coplanar with the lead middle region; and

lead bent regions that divergently extend from the lead peripheral regions and connect the outer lead regions to the lead peripheral regions, wherein

the lead arrangement is embedded in the package so that the package covers at least partially both the first and second surfaces.

9. The light emitting device according to claim **8**, wherein in the state where the lead arrangement is embedded in the package, the second surface side of the lead middle region is at least partially exposed from the package, wherein the exposed surface is substantially coplanar with the second surface side of the outer lead regions.

* * * * *