US009253925B1

(12) **United States Patent**
Smith

(10) **Patent No.: US 9,253,925 B1**
(45) **Date of Patent: Feb. 2, 2016**

(54) **PANEL FOR ENHANCING THERMAL CONDUCTION IN AN ELECTRONIC ASSEMBLY**

(71) Applicant: **L-3 Communications Corp.**, New York, NY (US)

(72) Inventor: **Robert H. Smith**, Salt Lake City, UT (US)

(73) Assignee: **L-3 Communications Corp.**, New York, NY (US)

(*) Notice: Subject to any disclaimer, the term of this patent is extended or adjusted under 35 U.S.C. 154(b) by 287 days.

(21) Appl. No.: **13/739,995**

(22) Filed: **Jan. 11, 2013**

(51) **Int. Cl.**
H05K 7/20 (2006.01)
H02B 1/01 (2006.01)

(52) **U.S. Cl.**
CPC ***H05K 7/20409*** (2013.01)

(58) **Field of Classification Search**
None
See application file for complete search history.

(56) **References Cited**

U.S. PATENT DOCUMENTS

7,784,585	B2	8/2010	Greenwood	
8,570,749	B2 *	10/2013	Tissot	361/720
2008/0019102	A1 *	1/2008	Yurko	361/719
2010/0321892	A1	12/2010	Vander Ploeg et al.	
2011/0058336	A1 *	3/2011	Sundstrom et al.	361/710
2012/0206882	A1 *	8/2012	Mohammed et al.	361/710
2013/0050953	A1 *	2/2013	Sano et al.	361/720

OTHER PUBLICATIONS

ITT Wire Rope Isolators (printed Sep. 4, 2012), 2 pages.

* cited by examiner

Primary Examiner — Courtney Smith
(74) *Attorney, Agent, or Firm* — Kirton | McConkie

(57) **ABSTRACT**

An electronic assembly can include a support structure, a circuit substrate coupled to a first portion of the support structure, and a composite material panel coupled to a second portion of the support structure. An electronic device can be coupled to a mounting surface of the circuit substrate and disposed within a space enclosed by walls of the support structure. The panel can include contiguous sections inner surfaces of which can be oriented within twenty-five degrees of parallel to said mounting surface. Each section can be significantly more thermally conductive generally parallel to the inner surface of the section than generally perpendicular to the inner surface.

21 Claims, 6 Drawing Sheets

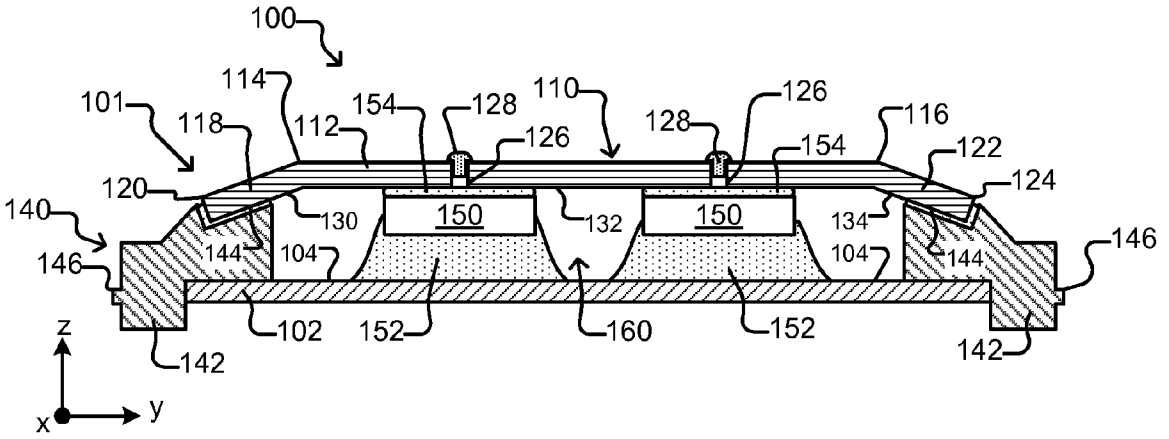

Figure 1A

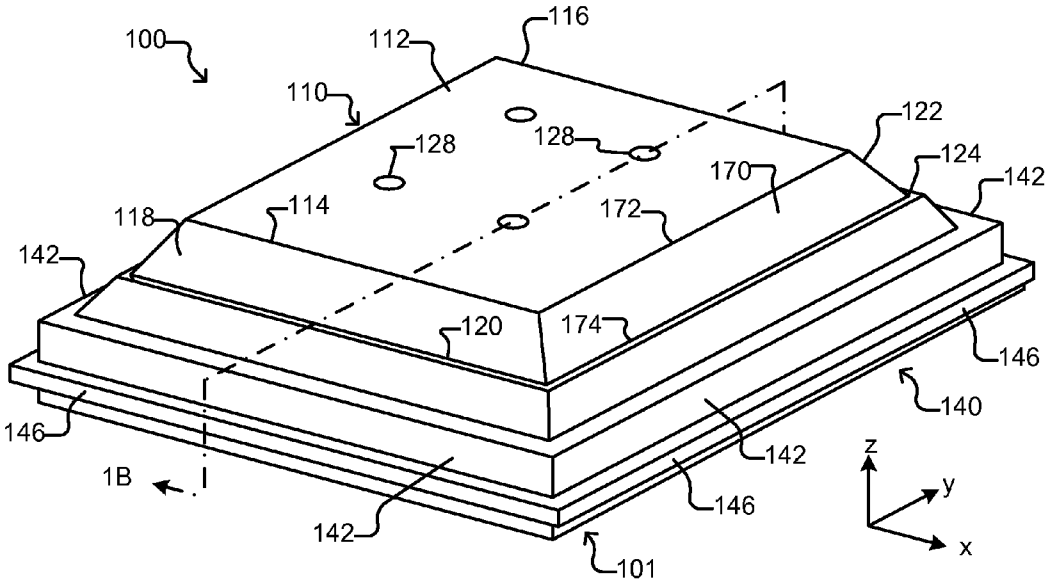

Figure 1B

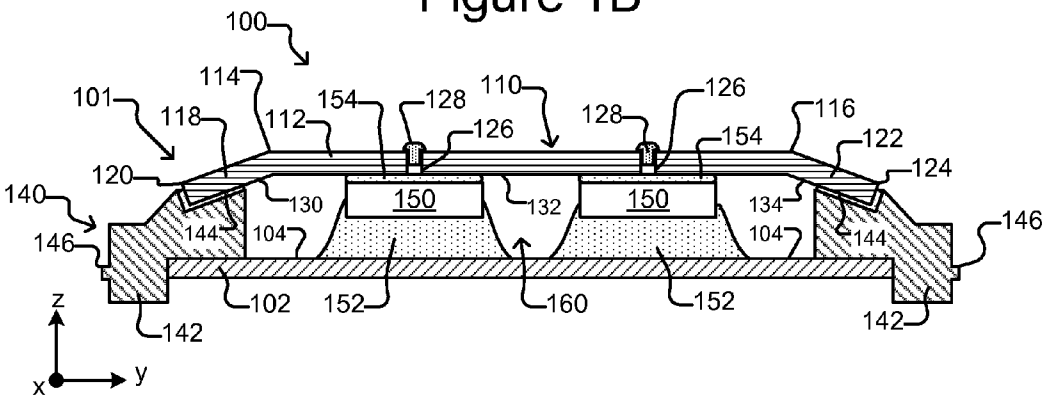

Figure 2

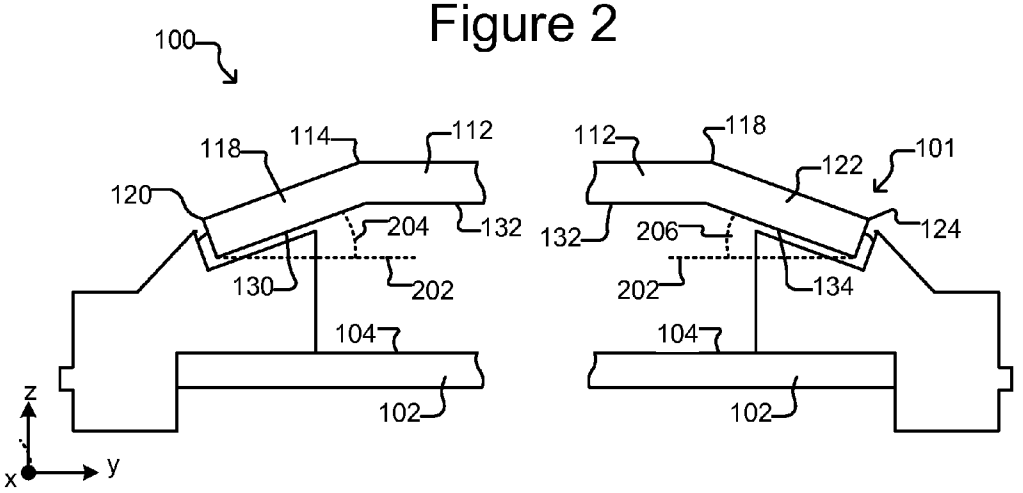

Figure 3

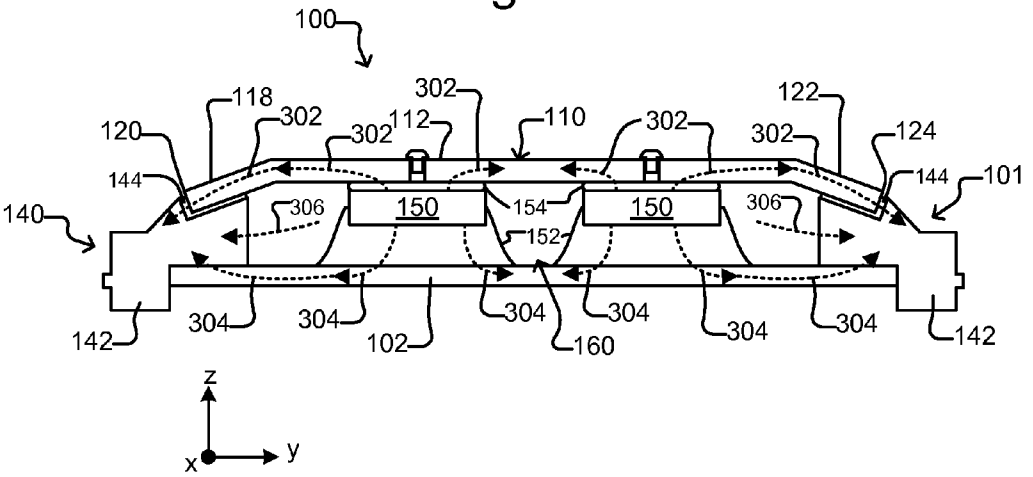

Figure 4

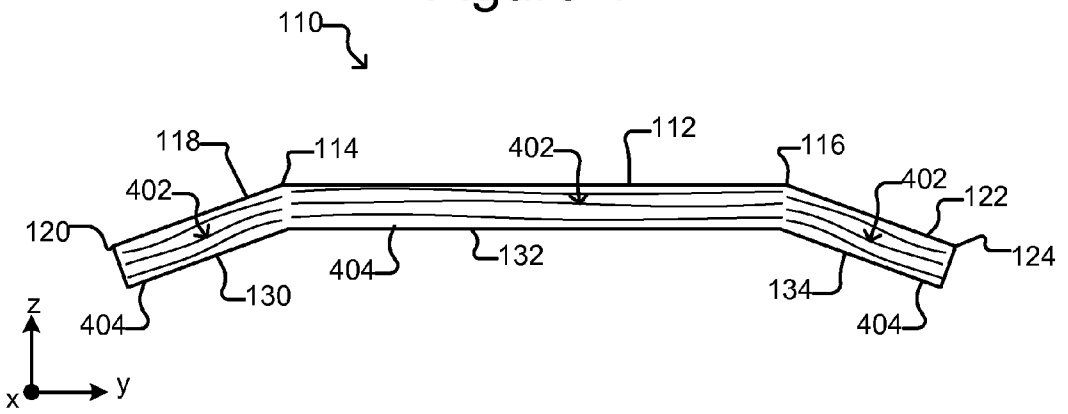

Figure 5

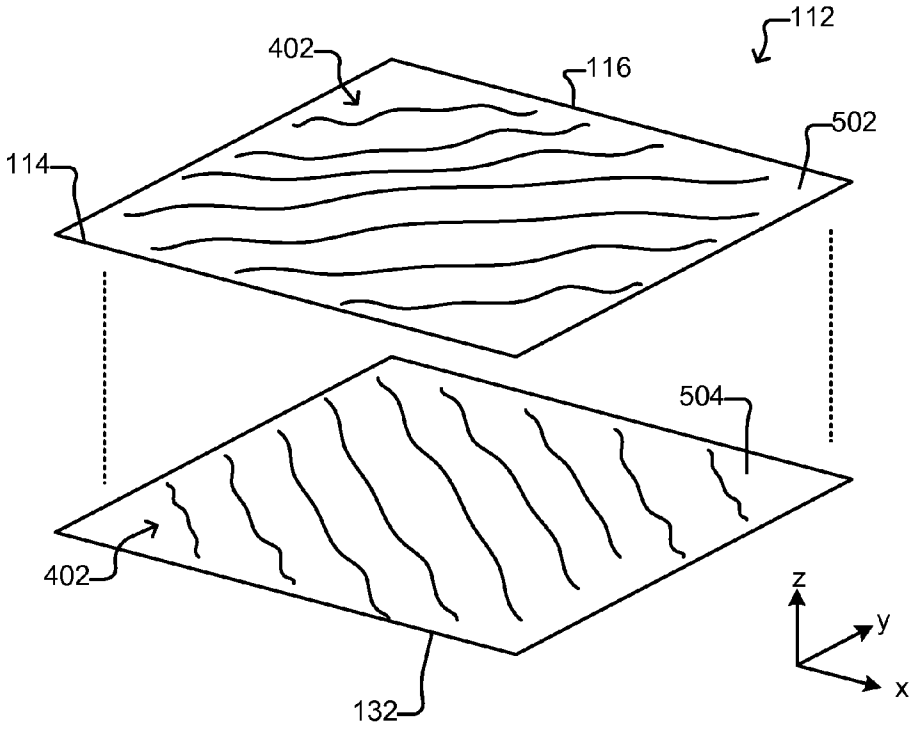

Figure 6

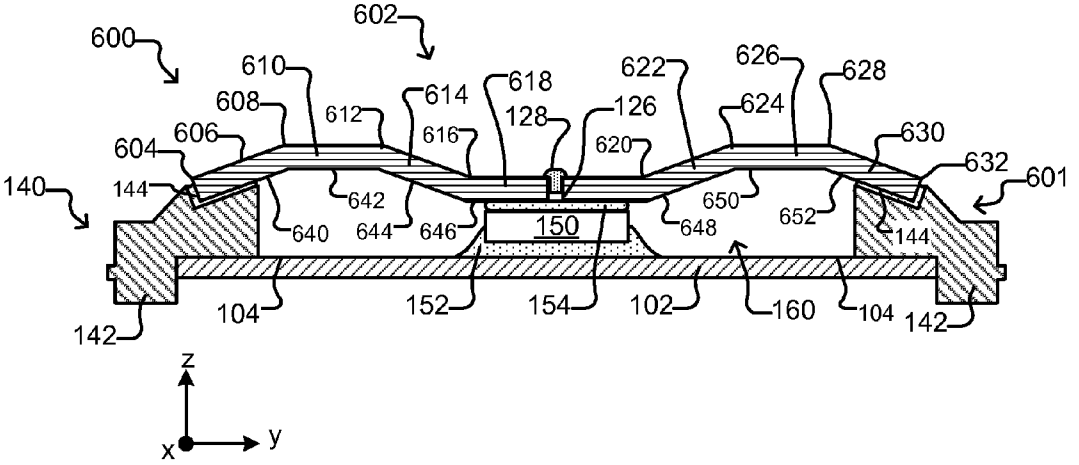

Figure 7

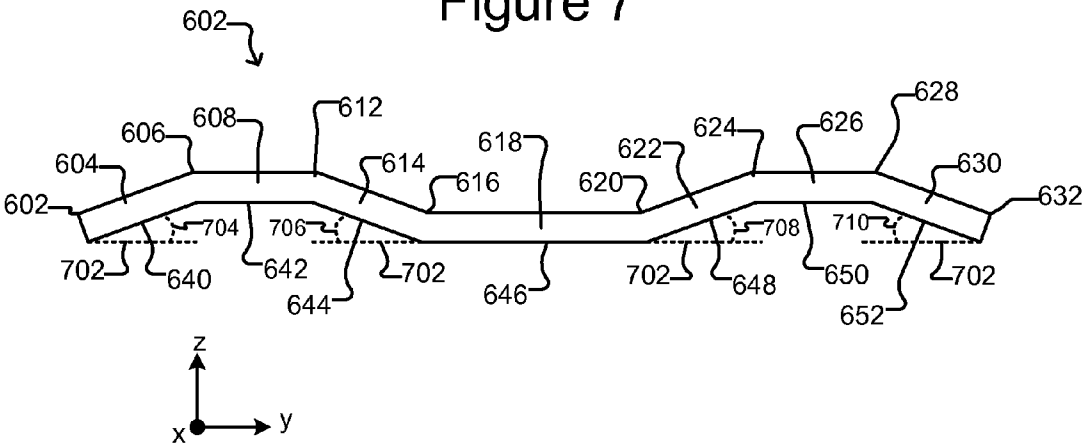

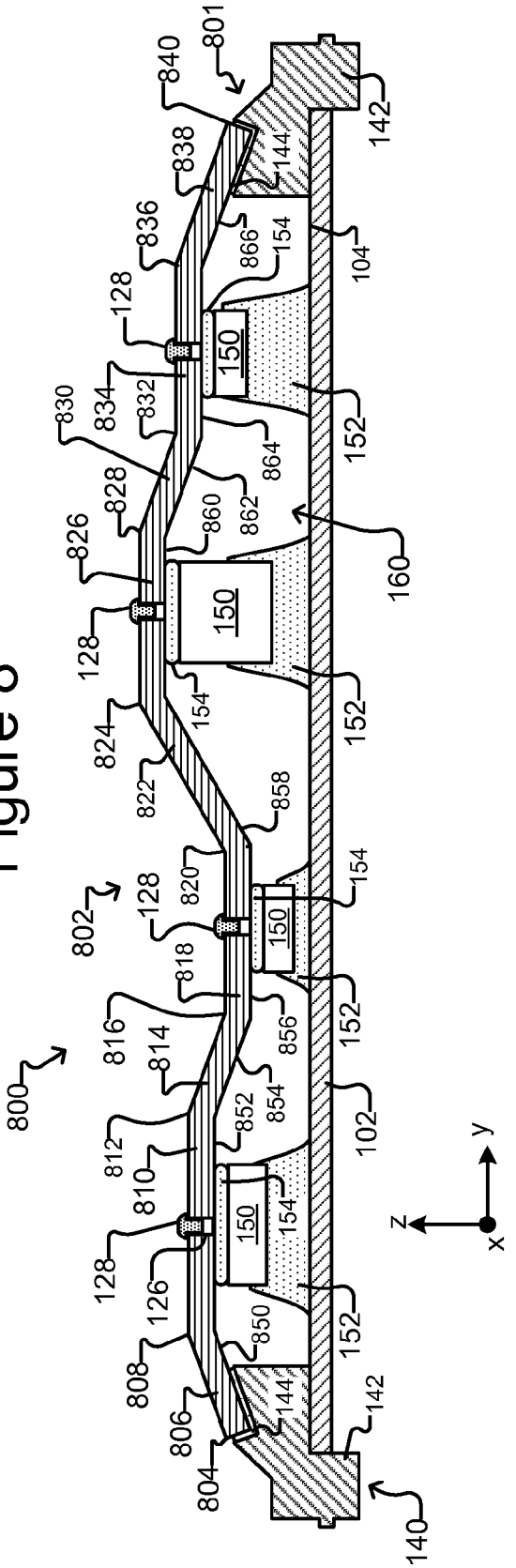
801
840
838
836
128
834
832
830
828
826
128
824
822
820
802
128
818
816
814
812
810
128
126
808
806
804
800
142
144
866
154
104
150
152
864
862
860
160
150
152
154
858
154
150
152
856
854
852
102
150
154
152
850
144
142
140
z
y
x

Figure 8

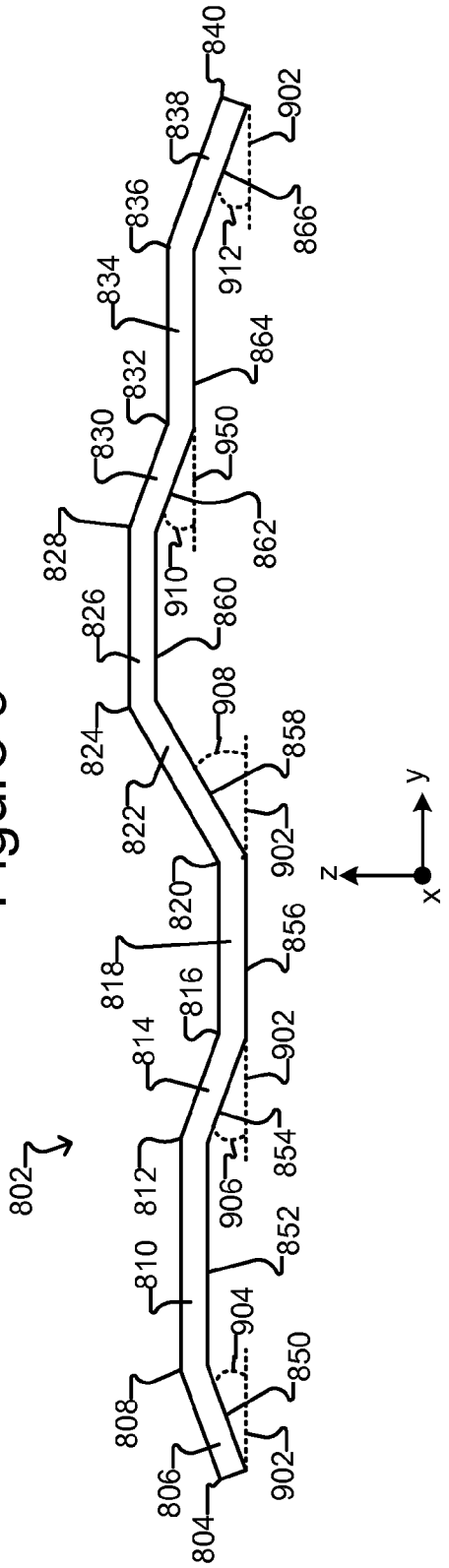

Figure 9

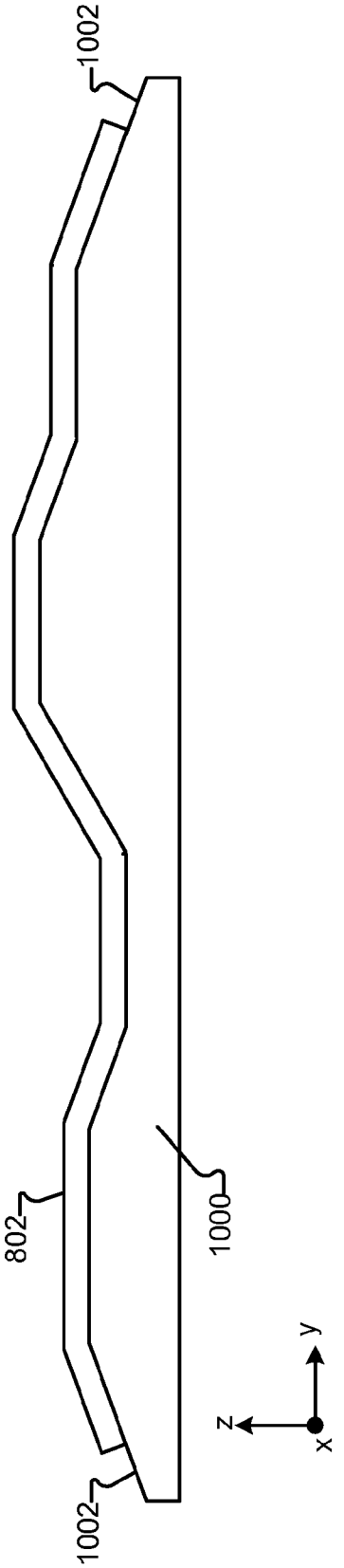

Figure 10

PANEL FOR ENHANCING THERMAL CONDUCTION IN AN ELECTRONIC ASSEMBLY

BACKGROUND

Circuit board assemblies are known in which multiple electronic circuit elements are attached to a circuit board. A support structure, to which the circuit board is attached, is often included. The support structure can, for example, aid in sinking heat generated by the electronic circuit elements and enhance the physical stiffness of the circuit board. Embodiments of the present invention include a composite heat frame, which can comprise a panel attached to such a support structure. Such a heat frame can be configured to enhance conduction of heat and impart stiffness to the circuit board. This can lead to improvements in heat sinking and physical stiffness with respect to weight, which can allow for the use of larger circuit boards. Some embodiments of the present invention provide the foregoing and/or other improvements and advantages.

SUMMARY

In some embodiments of the invention, an electronic assembly can include a support structure, a circuit substrate to which an electronic device is attached, and a panel. The support structure can have walls that enclose a space, and the circuit substrate can be coupled to a first portion of the support structure. The electronic device can be attached to a mounting surface of the circuit substrate and disposed within the space. The panel can be coupled to a second portion of the support structure and can comprise contiguous sections. Each of the sections can have an inner surface that faces the mounting surface of the circuit substrate and is oriented within twenty-five degrees of parallel to the mounting surface. Each section can have a first thermal conductivity substantially parallel to the inner surface of the section and a second thermal conductivity substantially perpendicular to the inner surface of said section, and the first thermal conductivity can be greater than the second thermal conductivity.

BRIEF DESCRIPTION OF THE DRAWINGS

FIG. **1**A illustrates a perspective view of an electronic assembly with a heat frame comprising a panel and a support structure and having superior heat conductive characteristics according to some embodiments of the invention.

FIG. **1**B is a cross sectional side view of the electronic assembly of FIG. **1**A.

FIG. **2** illustrates examples of angles between some of the sections of the panel and a plane that is substantially parallel to the mounting surface of a circuit substrate of the electronic assembly of FIG. **1**A or another of the sections according to some embodiments of the invention.

FIG. **3** illustrates with path flow arrows examples of heat conduction paths out of the electronic assembly of FIG. **1**A.

FIG. **4** illustrates an example in which the sections of the panel each comprise elongated fibers disposed in an encasing material according to some embodiments of the invention.

FIG. **5** shows an example in which one of the sections of the panel comprises layers laminated together according to some embodiments of the invention.

FIG. **6** illustrates another example of an electronic assembly with a composite material panel according to some embodiments of the invention.

FIG. **7** illustrates examples of angles between some of the sections of the panel and a plane that is substantially parallel to the mounting surface of a circuit substrate of the electronic assembly of FIG. **6** or another of the sections according to some embodiments of the invention.

FIG. **8** illustrates another example of an electronic assembly with a composite material panel according to some embodiments of the invention.

FIG. **9** illustrates examples of angles between some of the sections of the panel and a plane that is substantially parallel to the mounting surface of a circuit substrate of the electronic assembly of FIG. **8** or another of the sections according to some embodiments of the invention.

FIG. **10** shows an example of a mold plate with a patterned surface on which composite material panels can be formed according to some embodiments of the invention.

DETAILED DESCRIPTION OF EXEMPLARY EMBODIMENTS

This specification describes exemplary embodiments and applications of the invention. The invention, however, is not limited to these exemplary embodiments and applications or to the manner in which the exemplary embodiments and applications operate or are described herein. Moreover, the Figures may show simplified or partial views, and the dimensions of elements in the Figures may be exaggerated or otherwise not in proportion for clarity. In addition, as the terms "on," "attached to," or "coupled to" are used herein, one object (e.g., a material, a layer, a substrate, etc.) can be "on," "attached to," or "coupled to" another object regardless of whether the one object is directly on, attached, or coupled to the other object or there are one or more intervening objects between the one object and the other object. Also, directions (e.g., above, below, top, bottom, side, up, down, under, over, upper, lower, horizontal, vertical, "x," "y," "z," etc.), if provided, are relative and provided solely by way of example and for ease of illustration and discussion and not by way of limitation. In addition, where reference is made to a list of elements (e.g., elements a, b, c), such reference is intended to include any one of the listed elements by itself, any combination of less than all of the listed elements, and/or a combination of all of the listed elements.

As used herein, "substantially" means sufficient to work for the intended purpose. The term "substantially" allows for insignificant, unintended deviations from perfection. The words "substantially planar" thus allow for insignificant, unintended deviations from perfect planarity. As used herein, "substantially parallel" means within ten degrees of parallel and "substantially perpendicular" means within ten degrees of perpendicular. The term "ones" means more than one.

FIGS. **1**A and **1**B illustrate an example of an electronic apparatus **100** according to some embodiments of the invention. The electronic apparatus **100** can be, for example, a circuit card assembly. As shown, the electronic apparatus **100** can comprise a circuit substrate **102** and a composite heat frame **101**, which can comprise a panel **110** and a support structure **140**. As also shown, the circuit substrate **102** and the panel **110** can be coupled to the support structure **140**. The heat frame **101** can provide physical stiffness and sink heat generated by electronic devices **150** attached to the circuit substrate **102**. For example, the heat frame **101** can provide highly conductive thermal paths away from the electronic devices **150** and thus enhance heat sinking from the electronic devices **150**. The heat frame **101** can also enhance physical stiffness.

As shown, the circuit substrate **102** can be a structure to which one or more electronic devices **150** are attached. For example, the circuit substrate **102** can comprise a mounting surface **104** to which the electronic devices **150** are attached. For example, the electronic devices **150** can be soldered, adhered, or otherwise attached to the mounting surface **104**. Illustrated in FIGS. **1**A and **1**B is an adhesive material **152** adhering the electronic devices **150** to the mounting surface **104**. In some embodiments, the mounting surface **104** can be substantially planar. Although not shown, the circuit substrate **102** can comprise internal and/or external electrical wiring (not shown), such as electrically conductive traces, vias, and/or the like, to which the electronic devices **150** are electrically connected. Non-limiting examples of the circuit substrate **102** include a printed circuit board, which can also be referred to as a circuit board or circuit card.

As shown in FIG. **1**B, the circuit substrate **102** can be coupled to the support structure **140**, which can comprise walls **142** that enclose and define an interior space **160** between the walls **142**. As shown, the circuit substrate **102** can be coupled to the support structure **140** such that the electronic devices **150** attached to the circuit substrate **102** are in the interior space **160**. For example, the circuit substrate **102** can be coupled to a first (e.g., lower) portion of the support structure **140** as shown in FIG. **1**B. The circuit substrate **102** can be coupled to the support structure **140** in any suitable manner. For example, the circuit substrate **102** can be coupled to the support structure **140** by an adhesive material, screws, bolts, clamps, and/or the like (not shown).

The electronic devices **150** can be any type of electronic apparatus, component, circuit element, and/or the like. For example, one or more of the electronic devices **150** can be any of the following: a semiconductor die comprising one or more integrated electronic circuits, an electronic component (e.g., a resistors, capacitor, inductor, transistor or the like), a diode, or the like.

The support structure **140** can provide physical stiffness and can conduct heat away from the electronic devices **150**. The support structure **140** can thus comprise a physically stiff material that has a relatively high thermal conductivity. In some embodiments, the support structure **140** can be made of a metal, for example, such as aluminum, copper, or the like. Moreover, the support structure **140** can include one or more coatings. For example, the support structure **140** can be coated with an anti-corrosion material such as nickel.

The support structure **140** can include features aid in the dissipation of heat. For example, the support structure **140** can comprise one or more heat radiating elements **146**, which can comprise, for example, heat fins. Alternatively, an extension similar to element **146** can be a coupling structure that couples with corresponding coupling structure on another component or device (not shown) to facilitate coupling the electronic apparatus **100** to another device or apparatus.

Although illustrated as comprising four walls **142** surrounding the interior space **160**, the support structure **140** can include additional features. For example, the support structure **140** can include isolation walls (not shown) that extend from one or more of the walls **142** into the interior space **160**. Such isolation walls (not shown) can, for example, be disposed between ones of the electronic devices **150**.

The material of the support structure **140** can have a relatively high thermal conductivity. The support structure **140** can thus provide thermal paths that sink heat, such as heat generated by the electronic devices **150**, from the interior space **160**. With reference to FIG. **3**, heat generated by the electronic devices **150** can thus be conducted by walls **142** of the support structure **140** from the interior space **160** and radiated by the support structure **140** outside of the electronic assembly **100**. For example, the support structure **140** can radiate the heat into ambient air or, alternatively, into other components (not shown) outside of the support structure **140**. Examples of such components (not shown) include a chassis (not shown), a liquid cooling apparatus (not shown), a conduction apparatus (not shown), a forced convection cooling apparatus (not shown), or the like. Such a thermal flow is depicted in FIG. **3** by thermal flow arrows **306**. Heat from the electronic devices **150** can also heat the circuit substrate **102**, and such heat can also be conducted by the walls **142** into the ambient air or other components (not shown) (e.g., a chassis (not shown), a liquid cooling conduction apparatus (not shown), a forced convection cooling apparatus (not shown), or the like) that are outside the support structure **140** generally as discussed above. Examples of such thermal flows are depicted by the thermal flow arrows **304** in FIG. **3**.

As illustrated in FIGS. **1**A and **1**B, the panel **110** can be coupled to a second (e.g., upper) portion of the support structure **140** generally opposite the circuit substrate **102**. For example, the support structure **140**, the circuit substrate **102**, and the panel **110** can bound (e.g., partially or fully enclose) the space **160**. The panel **110** can be generally comparable to the circuit substrate **102** in size and overall form factor and can thus, with the support structure **140** and circuit substrate **102**, form an enclosure comprising the interior space **160** for the electronic devices **150**. The panel **110** can have high thermal conductivity and physical stiffness and can thus significantly enhance the thermal conductivity and stiffness characteristics of the support structure **140**.

As shown in FIGS. **1**A and **1**B, the panel **110** can comprise substantially parallel, contiguous sections **112**, **118**, **122** one or more of which can be angled with respect to each other and/or the mounting surface **104** of the circuit substrate **102**. For ease of illustration and discussion, the panel **110** is illustrated in FIGS. **1**A and **1**B and discussed below with respect to three such sections **112**, **118**, **122** angled as shown in FIGS. **1**A and **1**B. The panel **110** can, however, have more or fewer than the three substantially parallel, contiguous sections **112**, **118**, **122** shown, and those sections can be oriented (e.g., angled) differently than shown. As will be further discussed below, FIGS. **6** and **8** illustrate additional examples of panels **602** and **802** that have different numbers of substantially parallel, contiguous sections which are oriented differently than the panel **110** illustrated in FIGS. **1**A and **1**B. Even so, all of the panels **110**, **602**, **802** are examples only, and the invention is not limited to use of a panel with any particular number of sections or orientation of sections. Generally as illustrated by section **170**, the panel **110** can also include other sections, which may not be substantially parallel with one or more of the other sections.

With reference now to FIGS. **1**A and **1**B, as shown, the panel **110** can comprise sections **112**, **118**, **122**, which can be contiguous. In some embodiments, sections **112**, **118**, **122** can be bounded by boundaries **114**, **116**, **120**, **124**. Because sections **112**, **118**, **122** can be contiguous, pairs of contiguous sections **112**, **118**, **122** can share a common boundary **114**, **116**, **120**, **124**. For example, as illustrated in FIGS. **1**A and **1**B, boundary **114** is common to contiguous sections **112** and **118**, and boundary **116** is common to contiguous sections **112** and **122**. As also shown in FIGS. **1**A and **1**B, in some embodiments, the boundaries **114**, **116**, **120**, **124** can correspond generally to straight lines that can be substantially parallel. In other embodiments, however, the boundaries **114**, **116**, **120**, **124** do not correspond to straight lines and need not be substantially parallel. Moreover, as noted above, the panel **110** can have other sections **170** that may not be substantially

parallel with other sections, and those sections (e.g., section **170**) can include boundaries **172**, **174** that are not substantially parallel with the boundaries **114**, **116**, **120**, **124**. Such sections **170** can, however, by otherwise configured and have any of the same characteristics of the sections **112**, **118**, **122** discussed herein.

As also illustrated in FIGS. **1**A and **1**B, each section **112**, **118**, **122** can have an inner surface **130**, **132**, **134** that faces the mounting surface **104** of the circuit substrate **102**. As used herein, "faces" the mounting surface **104** means that an inner surface **130**, **132**, **134** is directed generally towards rather than away from the mounting surface **104**. In some embodiments, the inner surface **130**, **132**, **134** of each section **112**, **118**, **122** can extend between the boundaries **114**, **116**, **120**, **124** of the section **112**, **118**, **122**. For example, the inner surface **130** of section **118** can extend from an outer boundary **120** to the common boundary **114**, the inner surface **132** of section **112** can extend from the common boundary **114** to the common boundary **116**, and the inner surface **134** of section **122** can extend from the common boundary **116** to the outer boundary **124**. As shown, in some embodiments, the inner surfaces **130**, **132**, **134** can be substantially planar.

Generally as illustrated in FIG. **1**B, one or more of sections **112**, **118**, **122** can be angled with respect to each other and/or the mounting surface **104** of the circuit substrate **102**. For example, as shown in FIG. **2**, sections **118** and **122** can be angled with respect to section **112**. For example, there can be an angle **204** between an axis or plane **202** that is parallel to the mounting surface **104** of the circuit substrate **102** and/or the inner surface **132** of section **112**. As also illustrated in FIG. **2**, there can be an angle **206** between the axis or plane **202** and/or the inner surface **132**. In some embodiments, the angles **204** and **206** can be less than or equal to forty-five degrees, thirty degrees, twenty-five degrees, fifteen degrees, ten degrees, or five degrees. Put another way, in various embodiments, the angles **204** and **206** can be greater than zero but less than or equal to forty-five degrees, thirty degrees, twenty-five degrees, fifteen degrees, ten degrees, or five degrees. In fact, all of the inner surfaces **130**, **132**, **134** of the all of sections **112**, **118**, **122** of the panel **110** can be with forty-five degrees, thirty degrees, twenty-five degrees, fifteen degrees, ten degree, or five degrees of parallel to each other and/or the mounting surface **104** of the circuit substrate **102**.

The panel **110** can comprise a composite material. As used herein, "composite material" means a combination of two or more distinct and different materials. Moreover, the composite material of the panel **110** can be configured such that thermal conductivity can differ in different directions in the panel **110**. For example, each section **112**, **118**, **122** can be configured so that the thermal conductivity is significantly greater in a first direction that is substantially parallel to the inner surface **130**, **132**, **134** of the section **112**, **118**, **122** than in a second direction that is substantially perpendicular to the inner surface **130**, **132**, **134**. For example, section **118** can have a first thermal conductivity in a direction that is substantially parallel to the inner surface **130** and a second thermal conductivity in a direction that is substantially perpendicular to the inner surface **130**, and the first thermal conductivity can be significantly greater (e.g., two times or more, five times or more, fifty times or more, one-hundred times or more, or five hundred times or more) than the second thermal conductivity of section **118**. Put another way, the thermal conductivity of section **118** can be significantly greater (e.g., as much as five hundred times or more in some embodiments) in the plane of the inner surface **130** than perpendicular to the inner surface **130**. The panel **110** can also include one or more coatings such as an anti-corrosion coating, an electrically conductive coating that can function as an electromagnetic shield, or the like.

Similarly, section **112** can have a first thermal conductivity in a direction that is substantially parallel to the inner surface **132** and a second thermal conductivity in a direction that is substantially perpendicular to the inner surface **132**, and the first thermal conductivity can be significantly greater (e.g., two times or more, five times or more, fifty times or more, one-hundred times or more, of five hundred times or more) than the second thermal conductivity of section **112**. Likewise, section **122** can have a first thermal conductivity in a direction that is substantially parallel to the inner surface **134** and a second thermal conductivity in a direction that is substantially perpendicular to the inner surface **134**, and the first thermal conductivity can be significantly greater (e.g., as much as five hundred times or more) than the second thermal conductivity of section **122**. The thermal conductivity of section **112** can thus be significantly greater (e.g., in some embodiments, five hundred times or more) in the plane of the inner surface **132** than perpendicular to the inner surface **132**, and the thermal conductivity of section **122** can likewise be significantly greater in the plane of the inner surface **134** than perpendicular to the inner surface **134**.

The panel **110** can thus be configured to provide highly conductive thermal paths that are substantially parallel with the inner surfaces **130**, **132**, **134** of the sections **112**, **118**, **122**. For example, as illustrated in FIG. **3**, the panel **110** can provide highly conductive thermal paths as illustrated by flow arrows **302** from the electronic devices **150** into section **112** and then through the outer sections **118** and **122** to the support structure **140**. As shown in FIG. **1**B, a fill material **154** can be disposed between and physically contact the electronic devices **150** and the inner surface **132** of section **112**. The fill material **154** can be a thermally conductive material that can thus readily conduct heat from the electronic devices **150** into section **112** of the panel **110**. Similarly, the panel **110** can be coupled to the support structure **140** by a thermally conductive adhesive **144** to enhance conduction of the heat from the ends of the panel **110** corresponding to boundaries **120**, **124** to the support structure **140**.

Heat from the electronic devices **150** can thus readily flow from the electronic devices **150** through the fill material **154** into section **112** of the panel **110**. Due to the high conductivity in each section **112**, **118**, **122** substantially parallel to the inner surfaces **130**, **132**, **134**, the heat can readily flow as illustrated by flow arrows **302** through section **112** generally parallel to the inner surface **132** of section **112** into either of the outer sections **118**, **122** and out the ends of sections **118**, **122** that correspond to the outer boundaries **120**, **124** into the support structure **140**. As discussed above, the support structure **140** can radiate the heat into the surrounding ambient air or into other components (not shown) (e.g., a chassis (not shown), a liquid cooling apparatus (not shown), a conduction apparatus (not shown), a forced convection cooling apparatus (not shown), or the like) that are outside the support structure **140** generally as discussed above.

The panel **110** can thus provide thermal paths depicted by arrows **302** from the electronic devices **150** that are in addition to the thermal paths depicted by arrows **304** and **306** in FIG. **3**, which were discussed above. In fact, a thermal path corresponding to the flow arrows **302** in FIG. **3** from inside the electronic assembly **100** (e.g., from an electronic device **150**) to outside the electronic assembly can have a greater thermal conductivity than any other thermal path from the

space **160** inside the electronic assembly **100** to outside of the electronic assembly **100** including the thermal paths depicted by arrows **304**, **306** in FIG. **3**.

As noted, the panel **110** can comprise a composite material. FIG. **4** illustrates an example in which each section **112**, **118**, **122** is made of a composite material that comprises elongated fibers **402** embedded in an encasing material **404**. Moreover, the elongated fibers **402** in each section **112**, **118**, **122** can be oriented substantially parallel to the inner surface **130**, **132**, **34** of the section. For example, the elongated fibers **402** embedded in the encasing material **404** of section **118** can be oriented substantially parallel to the inner surface **130**. Similarly, the elongated fibers **402** embedded in the encasing material **404** of section **112** can be oriented substantially parallel to the inner surface **132**, and the elongated fibers **402** embedded in the encasing material **404** of section **122** can be oriented substantially parallel to the inner surface **134**. The fibers **402** can be significantly thermally conductive along their elongated lengths, which can thus make each section **112**, **118**, **122** significantly more conductive in a direction that is substantially parallel to the inner surfaces **130**, **132**, **134** of sections **112**, **118**, **122** than a direction that is substantially perpendicular to the inner surfaces **130**, **132**, **134** as discussed above.

In some embodiments, the elongated fibers **402** in a section **112**, **118**, **122** can be further oriented to extend generally from one boundary **114**, **118**, **120**, **124** to the other boundary of section. For example, the elongated fibers **402** embedded in the encasing material **404** of section **118** can extend generally from the boundary **120** to the boundary **114** of section **118**. Similarly, the elongated fibers **402** embedded in the encasing material **404** of section **112** can extend generally from the boundary **114** to the boundary **116** of section **112**, and the elongated fibers **402** embedded in the encasing material **404** of section **122** can extend generally from the boundary **116** to the boundary **124** of section **122**.

The foregoing, however, is merely an example. In some embodiments, one or more (e.g., all) of sections **112**, **118**, **122** can comprise a quasi-isotropic layup of layers of the fibers **402** in which the elongated lengths of the fibers **402** in all of the layers are substantially parallel to the inner surface **130**, **132**, **134** but the fibers **402** in one layer are oriented in different directions than the fibers **402** in another of the layers.

An example is illustrated in FIG. **5**, which shows an exploded view of section **112** comprising a layer **502** in which the elongated lengths of the fibers **402** are oriented in a first direction that is substantially parallel to the inner surface **132** and a second layer **504** in which the elongated lengths of the fibers **402** are oriented in a different direction that is also substantially parallel to the inner surface **132**. Section **112** can comprise two or more of such layers **502**, **504** stacked one on top of the other and laminated together. The other sections **118**, **122** can similarly comprise a plurality of stacked, laminated layers such as layers **502**, **504** as shown in FIG. **5**.

The fibers **402** can be any type of fiber that conducts heat along its elongated length. For example, the fibers **402** can be metal fibers. As another example, the fibers **402** can be carbon fibers. Examples of such carbon fibers include vapor grown carbon fibers, carbon nanotubes, or the like. As yet another example, the fibers **402** can be graphic fibers.

The encasing material **404** can be any material for holding the fibers **402** in place. For example, the encasing material **404** can be a matrix material. Examples of such matrix materials include polymeric, metallic, and ceramic matrixes. Epoxies, polyamides, resins, aluminum, titanium, and alumina are also suitable examples of encasing material **404**.

As shown in FIG. **1**B, there can be holes **126** in the panel **110** above the electronic devices **150**. The fill material **154** can be provided through the holes **126** onto the electronic devices **150**. Plugs **128** can thereafter plug the holes **126**.

Alternatively, the plugs **128** can be attached (e.g., with an adhesive such as an epoxy) to the panel **110**, and the holes **126** can be drilled through the plugs **128** and the panel **110**. The fill material **154** can then be provided through the holes **126** onto the electronic devices **150**. Such plugs **128** can seal holes **126** and improve thermal conductivity from the electronic devices **150** to the panel **110**.

Regardless, the fill material **154** can physically contact both the electronic devices **150** and the inner surface **132** of section **112**. A noted, the fill material **154** can be thermally conductive and can thus provide high conductivity thermal paths from the electronic devices **150** to the inner surface **132** of section **112** and thus the panel **110**.

As mentioned, the panel **110** can comprise more or fewer than the three substantially parallel sections **112**, **118**, **122**, and FIGS. **6** and **8** illustrates examples of panels **602** and **802** each of which has a different number and orientation of such sections. Other than a different number and configuration of sections and electronic devices **150**, however, the electronic assemblies **600** and **800** of FIGS. **6** and **8** can be the same as the electronic assembly **100** illustrated in FIGS. **1**A and **1**B as discussed above. In FIGS. **1**A, **1**B, **6**, and **8**, like number elements are the same, and like numbered elements in FIGS. **6** and **8** thus have the same properties and characteristics as discussed above with regard to electronic assembly **100**.

FIG. **6** illustrates an electronic apparatus **600** that can be the same as the electronic apparatus **100** but has a heat frame **601** rather than the heat frame **101**. As shown, the heat frame **601** can comprise the support structure **140** and an attached panel **602** rather than the panel **110**. As illustrated in FIG. **6**, the panel **602** can comprise sections **606**, **610**, **614**, **618**, **622**, **626**, **630**, which can be generally the same as any of sections **112**, **118**, **122** of the panel **110**. For example, each section **606**, **610**, **614**, **618**, **622**, **626**, **630** can comprise an inner surface **640**, **642**, **644**, **646**, **648**, **650**, **652**, and each section **606**, **610**, **614**, **618**, **622**, **626**, **630** can be bounded by boundaries **604**, **608**, **612**, **616**, **620**, **624**, **628**, **632**. Each section **606**, **610**, **614**, **618**, **622**, **626**, **630** can be configured like, comprise the same material as, and have the same characteristics and properties as any of sections **112**, **118**, **122** discussed above.

As shown in FIGS. **6** and **7**, section **618** can be oriented such that its inner surface **646** is substantially parallel with the mounting surface **104** of the circuit substrate **102**, and the inner sections **642** and **650** of sections **610** and **626** can also be substantially parallel with the mounting surface **104**. As illustrated in FIG. **7**, sections **604**, **614**, **622**, **630** can be angled with respect to sections **608**, **618**, **626**. For example, there can be an angle **704** between an axis or plane **702** that is parallel with the mounting surface **104** of the circuit substrate **102** and/or the inner surface **646** of section **618** and the inner surface **640** of section **604**. As also shown, there can be an angle **706** between the axis or plane **702** and the inner surface **644** of section **614**. There can similarly be an angle **708** between the axis or plane **702** and the inner surface **648** of section **622**, and there can likewise be an angle **710** between the axis or plane **702** and the inner surface **652** of section **630**.

In some embodiments, the angles **704**, **706**, **708**, **710** can be less than or equal to forty-five degrees, thirty degrees, twenty-five degrees, fifteen degrees, ten degrees, or five degrees. Put another way, in various embodiments, the angles **704**, **706**, **708**, **710** can be greater than zero degrees by but less than or equal to forty-five degrees, thirty degrees, twenty-five

degrees, fifteen degrees, ten degrees, or five degrees. In fact, all of the inner surfaces **640**, **642**, **644**, **646**, **648**, **650**, **652** of all of the sections **604**, **608**, **614**, **618**, **622**, **626**, **630** can be within forty-five degrees, thirty degrees, twenty-five degrees, fifteen degrees, ten degree, or five degrees of parallel with each other and/or the mounting surface **104** of the circuit substrate **102**.

As illustrated in FIG. **6**, the distance between the mounting surface **104** of the circuit substrate **102** and the inner surface **642** of section **610** and/or the inner surface **650** of section **626** can be greater than the distance between the mounting surface **104** and the inner surface **646** of section **618**. Moreover, the resulting downward orientation of sections **614** and **622** with respect to section **618** can, in some embodiments, create a downward force on the electronic device **150** that can keep the electronic device **150** in place, reduce contact resistance between leads of the electronic devices **150** and the circuit substrate **102**, or the like.

FIG. **8** illustrates an electronic apparatus **800** that can be the same as the electronic apparatus **100** but can comprise a heat frame **801** rather than the heat frame **101**. As shown, the heat frame **801** can comprise the support structure **140** and an attached panel **802** rather than the panel **110**. The panel **802** can comprise sections **806**, **810**, **814**, **818**, **822**, **826**, **830**, **834**, **838**, which can be generally the same as any of sections **112**, **118**, **122** of the panel **110**. For example, each section **806**, **810**, **814**, **818**, **822**, **826**, **830**, **834**, **838** can comprise an inner surface **850**, **852**, **854**, **856**, **858**, **860**, **862**, **864**, **866**, and each section **806**, **810**, **814**, **818**, **822**, **826**, **830**, **834**, **838** can be bounded by boundaries **804**, **808**, **812**, **816**, **820**, **824**, **828**, **832**, **836**, **840**. Each section **806**, **810**, **814**, **818**, **822**, **826**, **830**, **834**, **838** can be configured like, comprise the same material as, and have the same characteristics and properties as any of sections **112**, **118**, **122** discussed above.

As shown in FIGS. **8** and **9**, sections **810**, **818**, **826**, **834** can be oriented such that their inner surfaces **852**, **856**, **860**, **864** are substantially parallel with the mounting surface **104** of the circuit substrate **102**. As illustrated in FIG. **9**, sections **806**, **814**, **822**, **830**, **838** can be angled with respect to sections **810**, **818**, **826**, **834**. For example, there can be an angle **904** between an axis or plane **902** that is parallel with the mounting surface **104** of the circuit substrate **102** and/or the inner surfaces **852**, **856**, **860**, **864** of sections **810**, **818**, **826**, **834**. As also shown, there can be an angle **906** between the axis or plane **902** and the inner surface **854** of section **814**. There can similarly be an angle **908** between the axis or plane **902** and the inner surface **858** of section **822**, and there can likewise be an angle **912** between the axis or plane **902** and the inner surface **866** of section **838**. There can also be an angle **910** between an axis or plane **950** and the inner surface **862** of section **830**. The axis or plane **950** can be parallel to the axis or plane **902**.

In some embodiments, the angles **904**, **906**, **908**, **910**, **912** can be less than or equal to forty-five degrees, thirty degrees, twenty-five degrees, fifteen degrees, ten degrees, or five degrees. Put another way, in various embodiments, the angles **904**, **906**, **908**, **910**, **912** can be greater than zero degrees by but less than or equal to forty-five degrees, thirty degrees, twenty-five degrees, fifteen degrees, ten degrees, or five degrees. In fact, all of the inner surfaces **850**, **852**, **854**, **856**, **858**, **860**, **862**, **864**, **866** of all the sections **806**, **810**, **814**, **818**, **822**, **826**, **830**, **834**, **838** of the panel **802** can be within forty-five degrees, thirty degrees, twenty-five degrees, fifteen degrees, ten degree, or five degrees of parallel with each other and/or the mounting surface **104** of the circuit substrate **102**.

As illustrated in FIG. **8**, the distances between the mounting surface **104** of the circuit substrate **102** and two or more of the inner surfaces **852**, **856**, **860**, **864** can be different. The panel **802** can thus be customized to different sized electronic devices **150** as shown in FIG. **8**.

Panels **110**, **602**, **802** can be readily manufactured. For example, as shown in FIG. **10**, the panel **802** can be manufactured on a patterned surface **1002** of a mold plate **1000**. The patterned surface **1002** can be in the desired shape of the panel **802**. A panel **802** can be formed on the patterned surface **1002**. The panels **110**, **602** can also be made on a pattern surface like surface **1002** but that is patterned in the desired shape of panel **110** or panel **602**.

Although specific embodiments and applications of the invention have been described in this specification, these embodiments and applications are exemplary only, and many variations are possible. For example, there can be one or more additional support structures included in any of the electronic apparatuses **100**, **600**, **800**. For example, there can be a second support structure (not shown) disposed above the support structure **140** with the panel **110**, **602**, **802** between the second support structure (not shown) and the support structure **140** in any of the electronic devices **100**, **600**, **800**.

I claim:

1. An electronic assembly comprising:

a support structure comprising walls enclosing a space;

a circuit substrate coupled to a first portion of said support structure, said circuit substrate comprising a mounting surface;

an electronic device attached to said mounting surface and disposed within said space; and

a panel coupled to a second portion of said support structure, said panel comprising contiguous sections, each said section comprising a substantially planar inner surface facing said mounting surface of said circuit substrate and oriented within twenty-five degrees of parallel to said mounting surface,

wherein each said section has a first thermal conductivity substantially parallel to the inner surface of said section and a second thermal conductivity substantially perpendicular to the inner surface of said section,

wherein said first thermal conductivity is greater than said second thermal conductivity,

wherein an angle between said inner surface of a first one of said sections and a plane parallel to said inner surface of a second one of said sections is between five degrees and forty-five degrees inclusive, and

wherein said second one of said sections is contiguous with said first one of said sections.

2. The electronic assembly of claim **1**, wherein for each said section, said first thermal conductivity is at least five times greater than said second thermal conductivity.

3. An electronic assembly comprising:

a support structure comprising walls enclosing a space;

a circuit substrate coupled to a first portion of said support structure, said circuit substrate comprising a mounting surface;

an electronic device attached to said mounting surface and disposed within said space; and

a panel coupled to a second portion of said support structure, said panel comprising contiguous sections, each said section comprising an inner surface facing said mounting surface of said circuit substrate and oriented within twenty-five degrees of parallel to said mounting surface,

wherein each said section has a first thermal conductivity substantially parallel to the inner surface of said section and a second thermal conductivity substantially perpendicular to the inner surface of said section,

wherein for each said section, said first thermal conductivity is at least one-hundred times greater than said second thermal conductivity.

4. The electronic assembly of claim **2**, wherein:

said panel further comprises substantially parallel edges bounding said sections, and

for each said section, said inner surface of said section is from one of said edges bounding said section to another of said edges bounding said section.

5. The electronic assembly of claim **4**, wherein said mounting surface is substantially planar.

6. The electronic assembly of claim **5** further comprising thermally conductive material disposed between and physically contacting said electronic device and the inner surface of said first one of said sections of said panel.

7. The electronic assembly of claim **6**, wherein said inner surface of said first one of said sections is substantially parallel to said mounting surface.

8. An electronic assembly comprising:

a support structure comprising walls enclosing a space;

a circuit substrate coupled to a first portion of said support structure, said circuit substrate comprising a mounting surface;

an electronic device attached to said mounting surface and disposed within said space; and

a panel coupled to a second portion of said support structure, said panel comprising contiguous sections, each said section comprising an inner surface facing said mounting surface of said circuit substrate and oriented within twenty-five degrees of parallel to said mounting surface,

wherein each said section has a first thermal conductivity substantially parallel to the inner surface of said section and a second thermal conductivity substantially perpendicular to the inner surface of said section,

wherein said first thermal conductivity is greater than said second thermal conductivity, and

wherein:

the inner surface of a first one of said sections is substantially parallel to said mounting surface of said circuit substrate,

the inner surface of a second one of said sections is not substantially parallel to said mounting surface of said circuit substrate,

the inner surface of a third one of said sections is substantially parallel to said mounting surface of said circuit substrate, and

a distance perpendicular to said inner surface of said third one of said sections between said inner surface of said third one of said sections and said mounting surface of said circuit substrate is greater than a distance perpendicular to said inner surface of said first one of said sections between said inner surface of said first one of said sections and said mounting surface.

9. An electronic assembly comprising:

a support structure comprising walls enclosing a space;

a circuit substrate coupled to a first portion of said support structure, said circuit substrate comprising a mounting surface;

an electronic device attached to said mounting surface and disposed within said space;

a panel coupled to a second portion of said support structure, said panel comprising contiguous sections, each said section comprising an inner surface facing said mounting surface of said circuit substrate and oriented within twenty-five degrees of parallel to said mounting surface; and

thermally conductive material disposed between and physically contacting said electronic device and the inner surface of one of said sections of said panel,

wherein each said section has a first thermal conductivity substantially parallel to the inner surface of said section and a second thermal conductivity substantially perpendicular to the inner surface of said section,

wherein said first thermal conductivity is greater than said second thermal conductivity,

wherein for each said section, said first thermal conductivity is at least five times greater than said second thermal conductivity,

wherein said panel further comprises substantially parallel edges bounding said sections, and for each said section, said the inner surface of said section is from one of said edges bounding said section to another of said edges bounding said section,

wherein said mounting surface is substantially planar, and each of the inner surfaces of said sections of said panel are substantially planar,

wherein said inner surface of said one of said sections is substantially parallel to said mounting surface,

wherein the inner surface of a second one of said sections is substantially parallel to said mounting surface of said circuit substrate, and a distance between said inner surface of said second one of said sections and said mounting surface of said circuit substrate is greater than a distance between said inner surface of said one of said sections and said mounting surface, and

wherein:

an angle between the inner surface of a third one of said sections and a plane parallel to said inner surface of said second one of said sections is greater than zero but less than twenty-five degrees, and

said third one of said sections is contiguous with said one of said sections and said second one of said sections.

10. The electronic assembly of claim **9** further comprising:

a second electronic device coupled to said mounting surface of said circuit substrate; and

thermally conductive material disposed between and physically contacting said second electronic device and said inner surface of said second one of said sections of said panel.

11. The electronic assembly of claim **2**, wherein each of said inner surfaces of said sections of said panel are oriented within twenty five degrees of parallel to every other one of said inner surfaces of said sections.

12. The electronic assembly of claim **2**, wherein each said section of said panel comprises elongated fibers.

13. The electronic assembly of claim **12**, wherein for each said section of said panel, said elongated fibers of said section are substantially parallel to the inner surface of said section.

14. The electronic assembly of claim **13**, wherein a thermally conductive path from said space enclosed by said walls of said support structure out of said electronic assembly that has a greatest thermal conductivity comprises a thermal path through contiguous ones of said sections of said panel to an outer edge of an outer one of said sections of said panel.

15. An electronic assembly comprising:

a support structure comprising walls enclosing a space;

a circuit substrate coupled to a first portion of said support structure, said circuit substrate comprising a mounting surface;

an electronic device attached to said mounting surface and disposed within said space; and

a panel coupled to a second portion of said support structure, said panel comprising contiguous sections, each

said section comprising an inner surface facing said mounting surface of said circuit substrate and oriented within twenty-five degrees of parallel to said mounting surface,

wherein each said section has a first thermal conductivity substantially parallel to the inner surface of said section and a second thermal conductivity substantially perpendicular to the inner surface of said section,

wherein said first thermal conductivity is greater than said second thermal conductivity,

wherein a thermally conductive path from said space enclosed by said walls of said support structure out of said electronic assembly that has a greatest thermal conductivity comprises a thermal path through contiguous ones of said sections of said panel to an outer edge of an outer one of said sections of said panel, and

wherein said electronic assembly further comprises a thermally conductive adhesive coupling said outer edge of said outer one of said sections to said support structure.

16. The electronic assembly of claim **15** further comprising a thermally conductive material disposed between and in physical contact with said electronic device and the inner surface of one of said contiguous ones of said sections of said panel.

17. The electronic assembly of claim **12**, wherein said elongated fibers are carbon fibers.

18. The electronic assembly of claim **17**, wherein said elongated fibers are vapor grown carbon fibers.

19. The electronic assembly of claim **12**, wherein said panel comprises a matrix material and said elongated fibers disposed in said matrix material.

20. The electronic assembly of claim **1**, wherein said first one of said sections comprises:

a plurality of stacked layers each substantially parallel to said inner surface of said first one of said sections,

a first of said layers comprises elongated fibers oriented in a first direction,

a second of said layers comprises elongated fibers oriented in a second direction, and

said first direction is different than said second direction.

21. The electronic assembly of claim **20**, wherein:

said first direction is substantially perpendicular to said second direction, and

said first direction and said second direction are substantially parallel to said inner surface of said first one of said sections.

* * * * *