US007880280B2

(12) **United States Patent**
**Otremba**

(10) **Patent No.: US 7,880,280 B2**
(45) **Date of Patent: Feb. 1, 2011**

(54) **ELECTRONIC COMPONENT AND METHOD FOR MANUFACTURING AN ELECTRONIC COMPONENT**

(75) Inventor: **Ralf Otremba**, Kaufbeuren (DE)

(73) Assignee: **Infineon Technologies AG** (DE)

( * ) Notice: Subject to any disclaimer, the term of this patent is extended or adjusted under 35 U.S.C. 154(b) by 883 days.

(21) Appl. No.: **11/675,924**

(22) Filed: **Feb. 16, 2007**

(65) **Prior Publication Data**

US 2008/0197463 A1 Aug. 21, 2008

(51) **Int. Cl.**
***H01L 23/495*** (2006.01)
***H01L 23/52*** (2006.01)
***H01L 21/00*** (2006.01)

(52) **U.S. Cl.** ..... **257/676**; 257/E23.031; 257/E23.019; 257/E23.142; 257/E23.001; 257/E23.034; 257/E23.044; 257/E21.001; 257/734; 257/777; 257/686; 257/685; 257/666; 257/782; 257/784; 257/796; 257/712; 257/713; 257/717; 257/720

(58) **Field of Classification Search** ..... 257/676, 257/723, 777, 686, 685, E23.031, 666, 782, 257/E23.019, 690, E23.142, E23.001, 784, 257/796, 712, 713, 717, 720, E23.034, E23.044, 257/E23.141, E21.001
See application file for complete search history.

(56) **References Cited**

U.S. PATENT DOCUMENTS

| | | | | |
|---|---|---|---|---|
| 5,705,848 | A | 1/1998 | Bayerer | |
| 6,624,522 | B2 | 9/2003 | Standing et al. | |
| 7,271,470 | B1 * | 9/2007 | Otremba | 257/666 |
| 7,615,854 | B2 * | 11/2009 | Montgomery | 257/678 |
| 2006/0087026 | A1 | 4/2006 | Cao et al. | |

FOREIGN PATENT DOCUMENTS

| | | |
|---|---|---|
| DE | 19612514 | 5/1997 |
| DE | 10301091 | 7/2004 |

* cited by examiner

*Primary Examiner*—Alexander O Williams
(74) *Attorney, Agent, or Firm*—Banner & Witcoff, Ltd.

(57) **ABSTRACT**

An electronic component has at least two semiconductor devices, a contact clip and a leadframe with a device carrier portion and a plurality of leads. The contact clip extends between the first side of at least two semiconductor devices and at least one lead of the leadframe to electrically connect a load electrode of the at least two semiconductor devices to at least one lead.

**23 Claims, 3 Drawing Sheets**

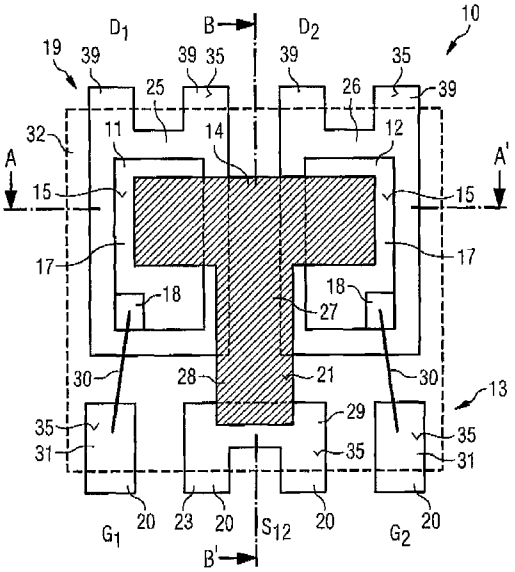


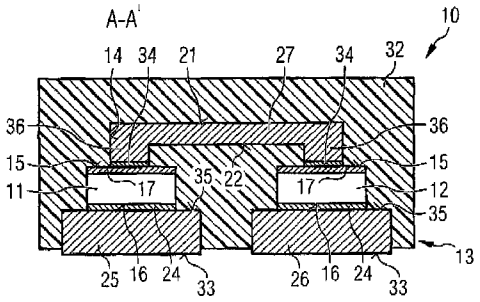




**INNOSCIENCE EXHIBIT 1009**

FIG 1

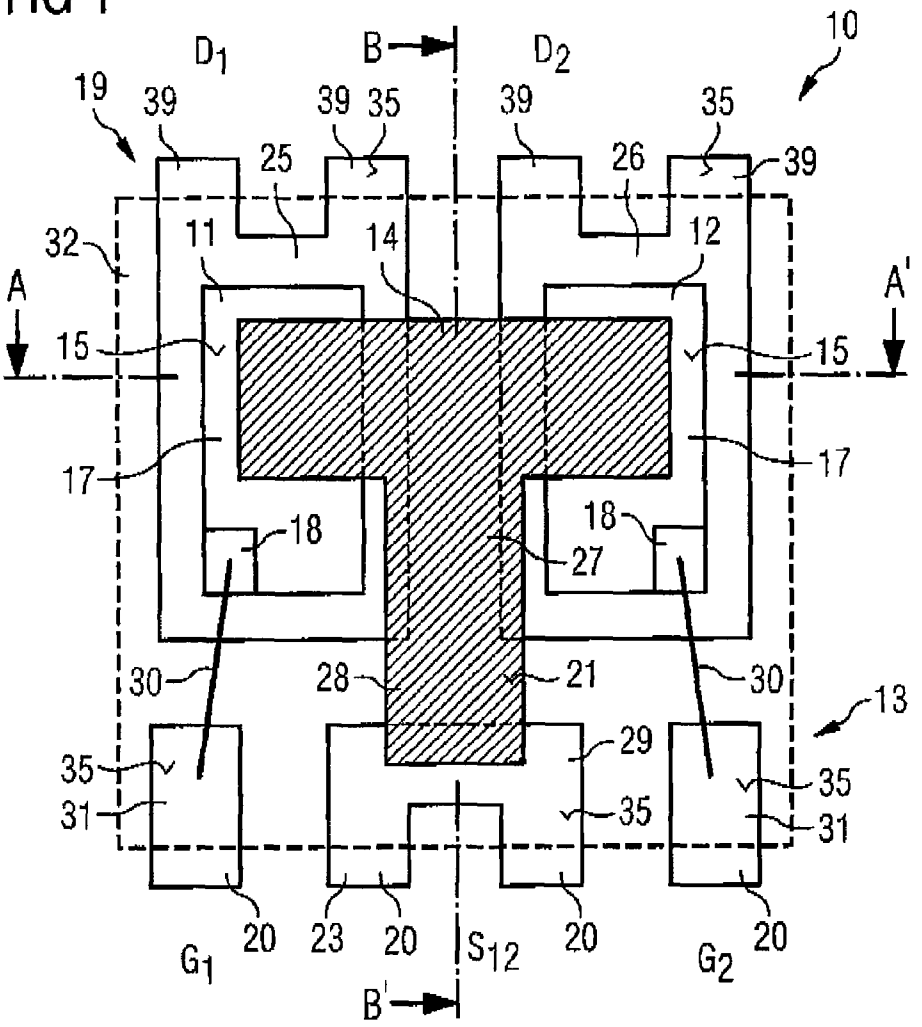


FIG 2A A-A'

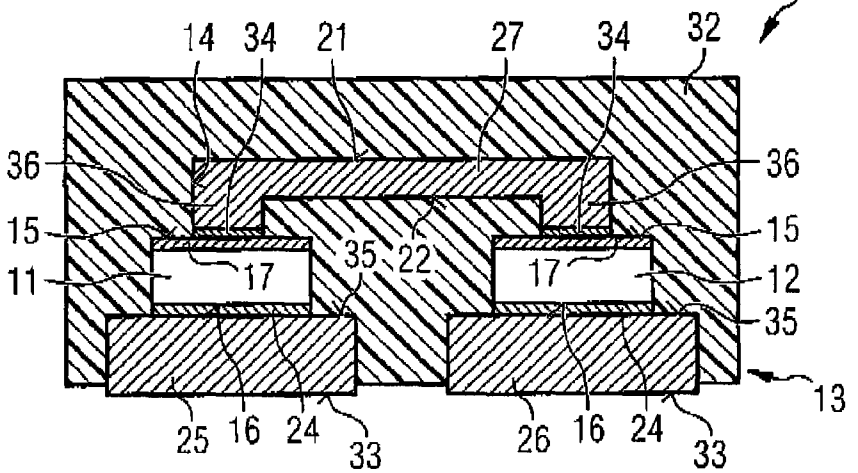

FIG 2B B-B'

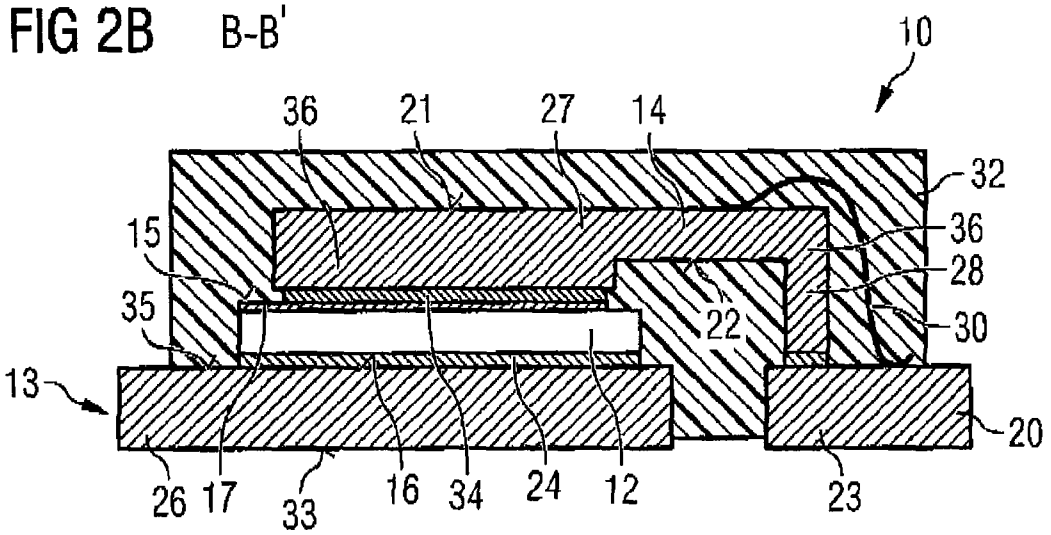


FIG 3

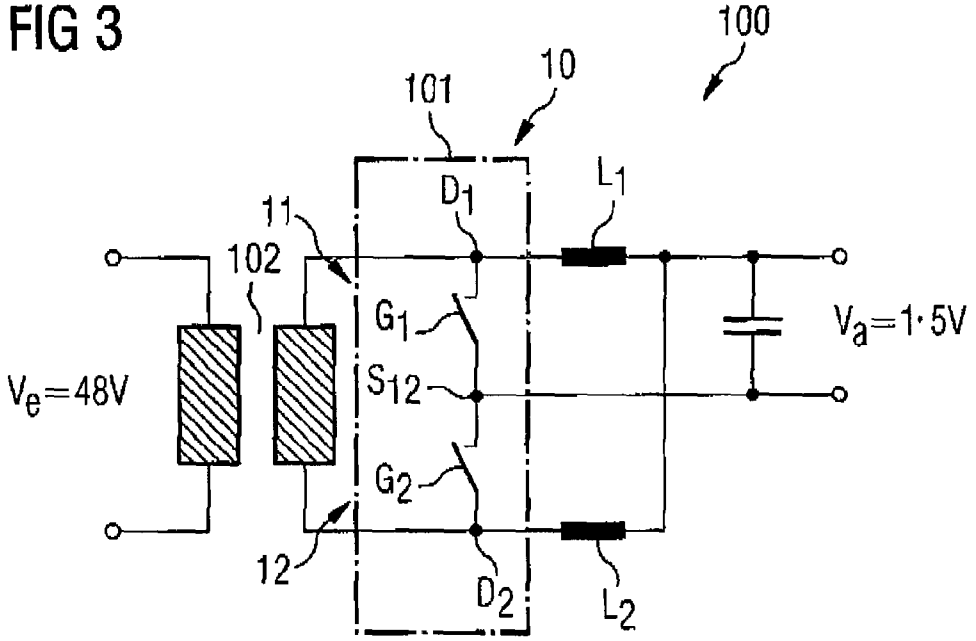

FIG 4

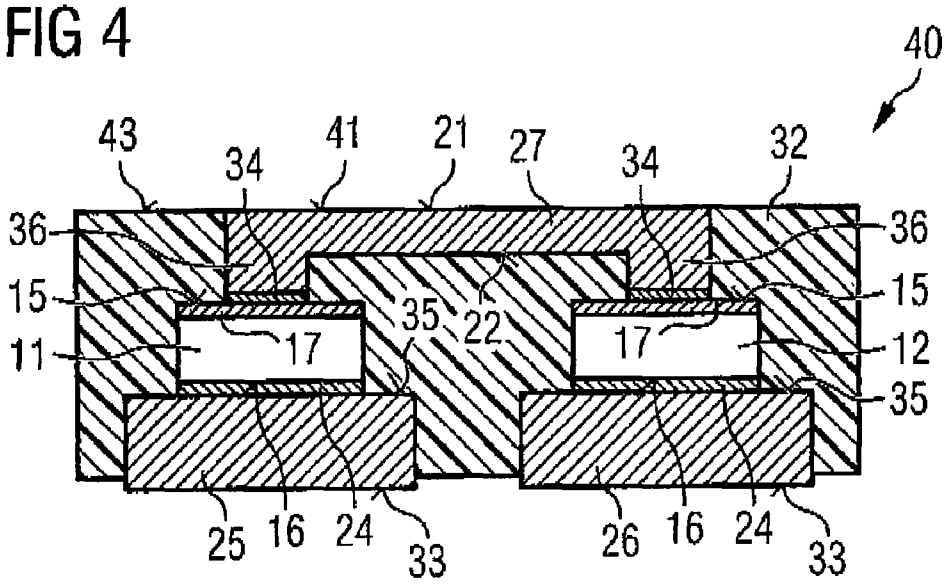
40
43
41
21
27
34
32
34
36
36
15
15
35
22
11
17
17
12
35
25
16
24
33
26
16
24
33

FIG 5

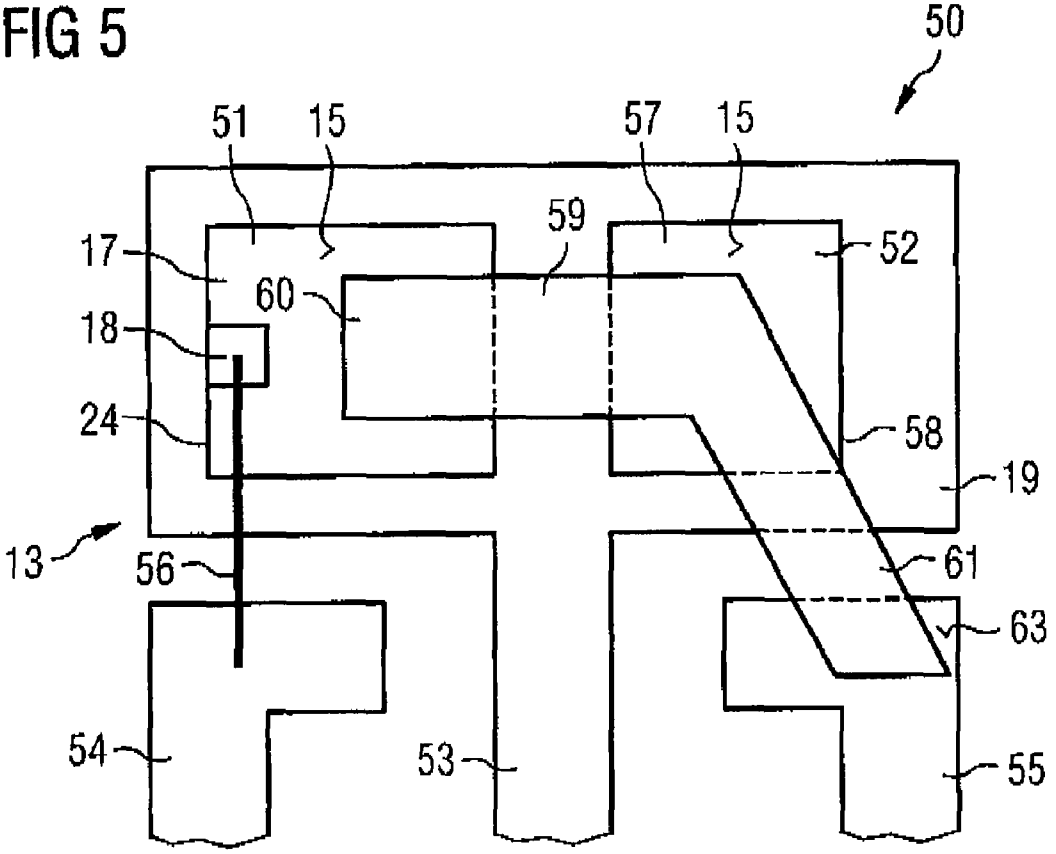
50
51
15
57
15
59
17
52
60
18
24
58
19
13
56
61
63
54
53
55

# ELECTRONIC COMPONENT AND METHOD FOR MANUFACTURING AN ELECTRONIC COMPONENT

## TECHNICAL FIELD

The present application relates to an electronic component, especially an electronic component comprising at least two semiconductor devices, for instance, two transistors or a transistor and a diode.

## BACKGROUND

An electronic component may comprise a single semiconductor device or may comprise two or more semiconductor devices. Electronic components comprising two or more semiconductor devices are also referred to as electronic modules.

Electronic components are typically mounted on a redistribution board, such as a printed circuit board, along with further passive devices as well as further active semiconductor devices to provide a circuit which, when operating, provides a desired function, for example a dc-dc converter.

Typically, the redistribution board comprises a variety of different circuits, each comprising appropriate electronic components. The individual circuits on the redistribution board may or may not be coupled with one another.

An electronic component may be provided in the form of a package in which the semiconductor device or semiconductor devices are accommodated. The packaging is, typically, provided by a plastic encapsulation compound such as epoxy resin. The package is provided with contacts which are electrically connected to the semiconductor device by an internal rewiring structure positioned within the package. The package contacts may be provided by pins or solder balls, for example.

## SUMMARY

According to an embodiment, an electronic component comprises at least two semiconductor devices, each comprising a first side and a second side which opposes the first side, wherein the first side comprises a first load electrode, wherein the first side of at least one semiconductor device further comprises a control electrode, a leadframe comprising a device carrier portion and a plurality of leads, the plurality of leads being arranged at a distance from the device carrier portion, wherein the second side of the at least two semiconductor devices is mounted on the device carrier portion of the leadframe, and a contact clip comprising an upper side and a lower side, wherein the contact clip extends between the first side of at least two semiconductor devices and at least one lead of the leadframe to electrically connect the first load electrode of the at least two semiconductor devices to the at least one lead.

## BRIEF DESCRIPTION OF THE DRAWINGS

Embodiments are described hereinafter, making reference to the appended drawings.

FIG. **1** illustrates a top view of an electronic component according to an embodiment,

FIG. **2***a* illustrates a cross-sectional view A-A' of the electronic component of FIG. **1**,

FIG. **2***b* illustrates a cross-sectional view B-B' of the electronic component of FIG. **1**,



FIG. **3** illustrates a circuit comprising an electronic component according to an embodiment,

FIG. **4** illustrates a cross-sectional view of an electronic component according to an embodiment, and

FIG. **5** illustrates a plan view of an electronic component according to an embodiment.

## DETAILED DESCRIPTION

FIGS. **1** and **2** illustrate a plan view and a cross-sectional view of a electronic component **10** which may be used in a circuit as illustrated in FIG. **3**. FIGS. **4** and **5** illustrate electronic components according to embodiments.

FIG. **1** illustrates an electronic component **10** which comprises two semiconductor devices **11**, **12**, a leadframe **13** and a contact clip **14**. The first semiconductor device **11** comprises a first side **15** and a second side **16** which opposes the first side **15**. The first side **15** of the first semiconductor device **11** comprises a first load electrode **17** and a control electrode **18**. The second semiconductor device **12** comprises a first side **15** and a second side **16** which opposes the first side **15**. The first side **15** of the second semiconductor device **12** comprises a first load electrode **17** and a control electrode **18**. The leadframe **13** comprises a device carrier portion **19** and a plurality of leads **20** arranged at a distance from the device carrier portion **19**. The second side **16** of the first semiconductor device **11** and the second side **16** of the second semiconductor device **12** are mounted on the device carrier portion **19** of the leadframe **13**. The contact clip **14** comprises an upper side **21** and a lower side **22**. The contact clip **14** extends between the first sides **15** of the semiconductor devices **11**, **12** and a lead **23** of the leadframe **13** to electrically connect the first load electrode **17** of the first semiconductor device **11** and of the second semiconductor device **12** to the lead **23**. The phrase "electrode" is used to denote a contact pad positioned on the surface of the semiconductor device which provides access to the doped regions of the body of the semiconductor device. A load electrode is typically a large area electrode which covers the majority of the side of the semiconductor device. A control electrode has a smaller area than a load electrode.

More precisely, in the present embodiment, the first semiconductor device **11** and the second semiconductor device **12** are, in each case, n-channel MOSFET transistor devices and the first load electrode **17** is the source electrode, the control electrode **18** is a gate electrode. The second side **16** of each of the first semiconductor device **11** and second semiconductor device **12** comprises a second load electrode **24** which is a drain electrode. In the embodiment illustrated in FIG. **1**, the device carrier portion **19** of the leadframe **13** comprises two device carrier portions **25**, **26** which are physically separate from one another. The first n-channel MOSFET device **11** is mounted on the first device carrier portion **25** and the second n-channel MOSFET device **12** is mounted on the second device carrier portion **26**. The drain electrode **24** of the first n-channel MOSFET device **11** is electrically connected to the first device carrier portion **25** and the drain electrode **24** of the second n-channel MOSFET device **12** is electrically connected to the second device carrier portion **26**. The contact clip **14** extends between the source electrode **17** of the first n-channel MOSFET device **11** and second n-channel MOSFET device **12**.

More precisely, the contact clip **14** is a sheet of metal such as copper formed to have a web portion **27** that connects the two first load electrodes **17**, in this embodiment the source electrode, of the two n-channel MOSFET devices **11**, **12**, and a leg portion **28** protruding from the web portion **27** which

provides a contact to a lead **23** of the leadframe **13**. In other words, the contact clip **14** comprises a general T-shape with the web portion **27** providing the bar of the T and the leg portion **28** protruding from the centre of the web portion **27** to provide the upright of the T.

In other embodiments which are not illustrated in the Figures, the leg portion protrudes asymmetrically from the web portion **27** so that the web portion extends different lengths from either side of the leg portion. The position of the leg portion in the web portion can be selected so as to accommodate different sizes of devices and different positions of the devices with respect to the lead of the leadframe to which the devices are electrically connected by the multi-chip contact clip.

In the present embodiment, four leads **20** are provided adjacent one side edge of the device carrier portion **19** which are spaced equidistant from one another. The four leads **20** are spaced at a distance from this side edge of the device carrier portion **19**. The centre two leads **23** are connected to one another by a joining member **29** comprising an upper surface **35** which provides a contact area on which a region of the leg portion **28** of the contact clip **14** is mounted. The lead **23** comprises two leads **20** joined by the joining member **29** and provides a single or common source contact **23**, S**12**, of the electronic component **10**. The remaining two leads **20** of the leadframe **13** are positioned on each side of the source lead **23** and provide two gate leads of the electronic component **10** by which each of the gate electrodes **18** of the two n-channel MOSFET devices **11**, **12** are accessible. The gate electrode **18** of the first n-channel MOSFET device **11** is electrically connected by a bond wire **30** to a first gate lead **31**, G**1**. The gate electrode **18** of the second internal MOSFET devised **12** is electrically connected by a bond wires **30** to a second gate lead **31**, G**2**.

The web portion **27** of the contact clip **14** extends from the first load electrode **17** of the first n-channel MOSFET device **11** to the first load electrode of the second n-channel MOSFET device **12**, thereby leaving the gate electrodes **18** of the two MOSFET devices **11**, **12** uncovered. The leg portion **28** of the contact clip **14** is positioned between and adjacent to the gate electrodes **18** of the two semiconductor transistor devices **11**, **12**.

The electronic component **10** further comprises four additional second leads **39**, two of which protrude from each of the device carrier portions **25**,**26**. More precisely, the four leads **39** produce form one side edge of the device carrier portions **25**, **26** which opposes the side edge adjacent to which the four leads **20** are positioned. The second leads **39** protrude from the device carrier portions **25**, **26** and are integral with the device carrier portions **25**, **26**.

The electronic component **10** further comprises plastic encapsulation compound **32** which encapsulates the semiconductor devices **11**, **12** and at least the upper surface **35** of the device carrier portion **19** and upper surface **35** of at least portions of the leads **20**, **39** of the leadframe **13**. The distal ends of the leads **20** and of the second leads **39** protrude from the side face of the plastic encapsulation compound **32**. The outer surfaces of the plastic encapsulation define outer surfaces of the package. The plastic encapsulation **32** and leadframe **13** conform to a known standard Power-SO package. The lower surfaces **33** of the two device carrier portions **25**, **26** and the lower surfaces **33** of the leads **20** are not encapsulated by the plastic encapsulation compound **32** and provide outer contact surfaces of the electronic component **10**. The electronic component **10** is a surface mountable device as exemplified in the embodiment illustrated in FIGS. **1** and **2**.

The electronic component **10** comprises two semiconductor devices **11**, **12** whose first load electrodes **17** (sources) are electrically connected to one another and to a lead **23** of the leadframe **13** by a single electrically conductive element in the form of a contact clip **14**. The contact clip **14** may be provided in the form of a metal strip having the lateral size and shape and vertical form adapted to extend between the first load electrodes **17** of two semiconductor devices **11**, **12** and the upper surface **35** of a lead **23** of a leadframe **13**. In this embodiment, the leadframe **13** is positioned within the electronic component at a level below the first side of the semiconductor devices **11**, **12**. The upper surface of the lead **23** may lie generally coplanar with the second side **16** of the semiconductor devices **11**, **12**. The contact clip **14** may have a general form and height adapted to accommodate the thickness of the semiconductor devices **11**, **12**. Typically, the device carrier portion **19** and the leads **20** of the leadframe **13** are stamped or etched form a metal sheet so that the upper side **35** of the device carrier portion **19** and the upper side **35** of the leads **20** are generally coplanar with one another. The lower surface **33** of the device carrier portion **19** and the lower surface **33** of the leads **20** may be generally coplanar with one another so as to provide a surface mountable or leadless type electronic component. Alternatively, the outer portions of the leads may be bent in a general direction away from the first side of the two semiconductor devices to provide pins by which the electronic component **10** may be mounted on a redistribution board such as a printed circuit board.

The lower surface **22** of the contact clip **14** may comprise contact areas **34** adapted to be positioned on the first load electrodes **17** of the two semiconductor devices **11**, **12** and on the upper surface **35** of the joining member **29** of the lead **23** of the leadframe **13**. The contact areas **34** may be provided with a surface which is wettable by soft solder and which enables a reliable soft solder connection to be formed between the contact clip **14** and the first load electrodes **17** of the semiconductor devices **11**, **12** and the lead **23** of the leadframe **13**. This surface may be provided by a layer of a metal or alloy which is wettable by soft solder. For example, the leadframe **13** may comprise copper and the contact areas **34** may comprise an outer surface of nickel.

The two semiconductor devices **11**, **12** of the electronic component **10** are connected to the lead **23** of the leadframe **13** by a single contact clip **14**. A contact clip **14** connection has an advantage over, for example, a bond wire connection in that the cross-sectional area of the connection is increased. This way, electrical resistance of the electrical connection can be reduced which can improve the performance of the electronic component. Furthermore, inductive losses can be reduced. The use of a single contact clip **14** to electrically connect two load electrodes **17** of two physically separate semiconductor devices **11**, **12** with each other as well as to a common lead **23** of the leadframe **13** has the further advantage that these connections can be made in a single process step. The contact clip **14** provides a compact internal rewiring structure within the electronic component **10**. A contact clip **14** providing an electrical connection between the upwardly facing side **15** of two semiconductor devices **11**, **12** and the upper side **35** of a lead **23** of the leadframe **13** positioned below the opposing second side **16** of the semiconductor devices **11**, **12** provides a further advantage in that the electrical connection is vertically compact, compared to, for example, a wire bond connection. This way, the height of the electronic component **10** can be reduced or thicker semiconductor devices **11**, **12** may be accommodated within an electronic component **10** of given outer dimensions.

Higher integration of at least two semiconductor devices, as exemplified by two semiconductor devices **11**, **12** in the embodiment of FIG. **1** is realised by the accommodation of at least two semiconductor devices within a package. The package may have a standard package outline which simplifies the integration of the electronic component in a circuit by the customer. For example, in the embodiment of the electronic component **10** illustrated in FIG. **1**, the electronic component **10** has a Power SO-8 package outline.

In the present embodiment, the contact clip **14** provides a rewiring between the two semiconductor devices **11**, **12** which is positioned within the package of the electronic component **10**. This simplifies the rewiring structure of the redistribution board onto which the electronic component **10** will be mounted is simplifies since the portion of rewiring between the two semiconductor devices **11**, **12** is provided by the contact clip **14** within the package of the electronic component **10**. The space occupied, more precisely the area occupied, by the two semiconductor devices **11**, **12** on the printed circuit board may be reduced by accommodating the two semiconductor devices **11**, **12** in an electronic component **10** which comprises the rewiring structure between the two semiconductor devices **11**, **12**.

Although the electronic component **10** is illustrated in FIG. **1** as comprising two semiconductor devices **11**, **12**, a single contact clip may also be used for contacting three or more semiconductor devices. Furthermore, an electronic component may comprise two or more contact clips each of which extends between two or more semiconductor devices. Each contact clip may be considered a multi-chip contact clip.

The semiconductor devices **11**, **12** of the electronic component **10** are illustrated in the form of vertical transistor devices. However, lateral transistor devices can also be provided in an embodiment not illustrated in the drawings. The transistor devices may also be provided in the form of p-channel MOSFET devices or IGBT devices.

It should be noted that objects of the same or similar functional properties are denoted with the same reference signs in the drawings. Unless explicitly noted otherwise, the description with respect to objects with similar or equal functional properties can be exchanged with respect to each other.

FIG. **2***a* illustrates a cross-sectional view along the line A-A' and FIG. **2***b* illustrates a cross-sectional view along the line B-B' of the electronic component **10** illustrated in plan view in FIG. **1**. The arrangement of the plastic encapsulation compound **32** and the semiconductor devices **11**, **12**, which, in this embodiment, are both vertical n-channel MOSFET devices, is illustrated in a cross-sectional view of FIG. **2***a* and **2***b*. The upper surface **21** of the contact clip **14** is embedded in the plastic encapsulation compound **32**. More precisely, the upper surface **21** of both the web portion **27** and of the leg portion **28** of contact clip **14** is embedded within the plastic encapsulation compound **32**.

The form of the contact areas **34** provided on the lower surface **22** of the web portion **27** of the contact clip **14** is also illustrated in more detail in FIG. **2***a* and **2***b*. The contact areas **34** comprise a region **36** which protrudes from the lower surface **22** of the web portion **27** of the contact clip **14**. The contact clip **14** is provided by a metal foil. The protruding regions **36** can be formed by plastically deforming the metal foil, for example by pressing the upper surface **21**, so that the thickness of the contact clip **14** is generally uniform over the extent of the contact clip **14**. The protruding regions **36** which provide the contact areas **34** are further provided with a nickel coating **37** which is easily wettable by solder. This enables the contact clip **14** to the mounted on the first electrode **17** of the two semiconductor devices **11**, **12** by soft solder joints.

The contact clip **14** further comprises a third protruding region **36**, illustrated in the cross-sectional view of FIG. **2***b*, which protrudes from the lower surface **21** and which provides a contact area **34** adapted to be positioned on the upper surface **35** of the joining member **29** of the lead **23**. The third protruding region **36** is also provided with a solder wettable layer **37**.

The cross-sectional view of FIG. **2***a* of the electronic component **10** also illustrates that the lower surface **33** of each of the device carrier portions **25**, **26** of the leadframe **13** protrudes from the plastic encapsulation compound **32**, more precisely from the lower surface of the plastic encapsulation compound **32** and may provide contact areas, more precisely, a first drain contact D**1** and a second drain contact D**2** of the electronic component **10**, respectively.

An embodiment for manufacturing an electronic component **10** comprises providing at least two semiconductor devices **11**, **12**, each comprising a first electrode **17**, providing a leadframe **13** comprising a device carrier portion **19** and a plurality of leads **20**, mounting the at least two semiconductor devices **11**, **12** on the device carrier portion **20** of the leadframe **13** and connecting the first electrode **17** of the at least two semiconductor devices **11**, **12** to the at least one lead of the leadframe **13** with a single contact clip **14**.

The contact clip **14** may be manufactured by pressing and stamping the contact clip **14** from a sheet of the desired metal.

The contact clip **14** may be connected to the first electrode **17** of the semiconductor devices **11**, **12** by soft soldering, diffusion soldering or electrically conductive adhesive. The semiconductor devices **11**, **12** may be mounted on the device carrier portion **19** of the leadframe **13** by soft solder, diffusion solder or a die attach material.

The semiconductor devices **11**, **12** may be encapsulated in plastic encapsulation by a molding process.

The electronic component **10** may be manufactured by providing at least two semiconductor devices **11**, **12** each comprising a first side **15** and a second side **16** which opposes the first side **15**. The first side **15** of the at least two semiconductor devices comprises a first load electrode **17**. The first side **15** of at least one semiconductor device **11** further comprises a control electrode **18**. A leadframe **13** is provided which comprises a device carrier portion **19** and a plurality of leads **20**. The plurality of leads **20** are arranged at a distance from the device carrier portion **19**. The second side **16** of the at least two semiconductor devices **11**, **12** is mounted on the device carrier portion **19** of the leadframe **13**. A contact clip **14** is provided which is adapted to extend between the first side **15** of at least two semiconductor devices **11**, **12** and at least one lead **23** of the leadframe **13**. The first load electrode **17** and of the least two semiconductor devices **11**, **12** is connected to at least one lead **23** of the leadframe **13** with the contact clip **14**.

More precisely, the electronic component **10** may comprise two semiconductor devices **11**, **12**, each being a vertical semiconductor transistor device comprising a first side **15** with a source electrode **17** and a gate electrode **18** and a second side **16** with a drain electrode **24**. In the embodiment of the FIGS. **1** and **2**, the device carrier portion **19** of the leadframe **13** comprises two portions **25**, **26** which are physically separate from one another. One transistor device **11**, **12** is mounted on each of the device carrier portions **25**, **26**. More precisely, the drain electrode **24** of a first transistor device **11** is mounted on, and electrically connected to, the first device carrier portion **25** and the drain electrode **24** of a second transistor device **12** is mounted on, and electrically connected to, the second device portion **26**. The contact clip **14** is adapted to extend between the first side **15** of the two semi-

conductor transistor devices **11**,**12** and the joining member **29** of the source lead **23** of the leadframe **13**. More precisely, the contact clip comprises a web portion **27** which is adapted to extend between the source electrodes **17** of the first side **15** of the two semiconductor transistor devices **11**, **12** such that the gate electrode **18** of each of the two semiconductor transistor devices is **11**, **12** remains uncovered by the contact clip **14**, more precisely the web portion **27** of the contact clip **14**. The contact clip **14** including both the web portion **27** and the leg portion **28** is positioned adjacent the gate electrode **18** positioned on the first surface **15** of each of the two semiconductor transistor devices **11**,**12**. This enables the free access to the gate electrode **18** and simplifies the provision of an electrical contact between the gate electrode **18** and a lead **31** of the leadframe **13**.

The contact clip **14** may be connected to the first load electrodes **17** of the least two semiconductor devices **11**, **12** and to at least one lead **23** of the leadframe **13** by soft solder connections.

The semiconductor devices **11**, **12** and at least the upper surface **35** of the device carrier portion **19** and the upper surface **35** of at least portions of the leads **20** may be encapsulated by a plastic encapsulation compound **32**. The outer surfaces of the plastic encapsulation compound may define the outer surfaces of the electronic component **10** and the outer surfaces of the package and are denoted by the dashed line in the view of FIG. **1**.

In an embodiment, the encapsulation is carried out so that the upper surface **21** of the contact clip **14** is completely enclosed by, and embedded in, the plastic encapsulation compound **32**. The contact clip **14** is completely embedded by the plastic encapsulation compound **32** which provides electrical isolation for the contact clip **14**.

Alternatively, the encapsulation may be carried out so that the upper surface **21** of at least a portion of the upper surface **21** of the contact clip **14** is exposed from the plastic encapsulation compound **32**. More precisely, the encapsulation may be carried out so that a portion of the upper surface **21** of the web portion **27** of the contact clip **14** is exposed from the plastic encapsulation compound **32**. The encapsulation may be carried out by injection molding.

The method of manufacturing an electronic component **10** may also be carried out by providing a leadframe strip comprising a plurality of leadframes **13**, which may each have a form as previously described. The leadframe strip comprises a plurality of component positions. At least two semiconductor devices **11**, **12** may be mounted on each device carrier portion **19** of each leadframe **13** in the leadframe strip and then a contact clip **14** connected between the first load electrode **17** of the two semiconductor devices **11**, **12** positioned in each component position of the leadframe strip. The individual electronic components **10** may be singulated from the leadframe strip after the assembly process and, more particularly, after the plastic encapsulation **32** has been formed for each electronic device **10**, if this is provided.

In an embodiment, a contact clip **14** is used to provide a multichip contact between the load electrode **17** of the least two semiconductor transistor devices **11**, **12** and at least one lead **23** of a leadframe **13**. The contact clip **14** provides a common load contact. In an embodiment, the common load contact is a common source contact.

A leadframe is provided which comprises two device carrier portions **25**, **26** and a plurality of leads **20**, the plurality of leads **20** being arranged at a distance from the device carrier portions **25**, **26** and which further comprises at least two semiconductor transistor devices **11**, **12**, each semiconductor transistor device **11**, **12** comprising a first side **15** and a second side **16** which opposes the first side **15**, wherein the first side **15** comprises a first load electrode **17** and a control electrode **18** and the second side **16** comprises a second load electrode, **24** wherein the second side **16** of one semiconductor transistor device **11** is mounted on one of the at least two device carrier portions **25** of the leadframe **13**. A contact clip **14** adapted to extend between the first load electrodes **17** of at least two semiconductor transistor devices **11**, **12** and at least one lead **23** of the leadframe **13** is provided. The first load electrode **17** of at least two semiconductor transistor devices **11**, **12** is connected to at least one lead **23** of the leadframe **13** with the contact clip **14**.

The contact clip **14** may be connected to the first load electrode **17** of the at least two semiconductor devices **11**, **12** and the at least one lead **23** by soft solder.

FIG. **3** illustrates a circuit **100** providing synchronous rectification which comprises the electronic component **10**. The electronic component **10** provides two transistors **11**, **12** in which the source electrodes are electrically connected together by the contact clip **14** to provide a common source, S**12**. The function provided by the electronic component **10** in the circuit **100** illustrated in FIG. **3** is indicated with a dashed line **101**. The circuit **100** provides a rectifier in which the transistors rectify the output voltage of the transformer **102**. A source current at an input voltage of **48**V is converted by the circuit **100** to an output current at a voltage of **1.5**V. The circuit **100** of the embodiment of FIG. **3** provides self driven synchronous rectification driven by the secondary of the transformer **102**. However, the electronic component **10** may be used in other circuits providing synchronous rectification such as phase locked loop and primary side derived synchronous rectification circuits.

FIG. **4** illustrates an electronic component **40** according to an embodiment. The electronic component **40** comprises two semiconductor devices **11**, **12**, a leadframe **13** and a contact clip **14**. The electronic component **40** differs from the electronic component **10** which is illustrated in FIGS. **1** and **2**, by the arrangement of the plastic encapsulation compound **32**. In the electronic component **40**, the upper surface **21** of regions of the web portion **27** of the contact clip **14** is exposed from the plastic encapsulation compound **32**. The lower surface **22** of the contact lead **14**, the semiconductor devices **11**, **12** and the upper surface of the device carrier portions **25**, **26** and the upper surface of the leads **20** are embedded in the plastic encapsulation compound **32**. The exposed area **41** of the contact clip **14** provides a shorter path of thermal resistance between the semiconductor devices **11**, **12** and the environment around the electronic component **40**. The thermal performance of the electronic component **40** may be increased due to an improvement in the efficiency of thermal dissipation from the electronic component **40**. An additional heat sink or cooling element may be positioned on the upper surface **42** of the electronic component **40**. In an embodiment, an additional heat sink may be positioned directly on the exposed regions **41** of the contact clip **14**. The additional heat sink may be in electrical connection with the contact clip **14** if the contact clip **14** is connected to ground potential.

FIG. **5** illustrates a top view of a component **50** according to an embodiment. The electronic component **50** comprises two semiconductor devices **51**, **52** and a leadframe **13**. in contrast to the embodiments of FIGS. **1** to **4**, the two semiconductor devices **51**, **52** are of different types. The first semiconductor device **51** is a vertical power MOSFET device comprising a first side **15** and a second side **16** which opposes the first side **15**. The first side **15** of the first semiconductor device **51** comprises a large area first load electrode **17** and a small area control electrode **18**. In this embodiment, the semi-

conductor device **51** is an n-channel power MOSFET device so that the first load electrode **17** is a source electrode and the control electrode **18** is a gate electrode. The second semiconductor device **52** is a vertical diode comprising a first surface **15** and a second surface **16** which opposes the first surface **15**. The first surface **15** comprises a anode **57** and the second surface **16** comprises a cathode **58**.

In the embodiment illustrated in FIG. **5**, the device carrier portion **17** of the leadframe **13** comprises a single portion on which the second side **16** of both the transistor device **51** and the diode **52** are mounted. The drain electrode **24** of the power MOSFET device **51** and the cathode electrode **58** of the diode **52** are electrically connected to the device carrier portion **19**. The leadframe **13** comprises a first lead **53** which protrudes from the device carrier portion **19** and which provides a drain contact. The leadframe **13** further comprises two leads **54**, **55** which are spaced at a distance from the side edge of the device carrier portion **19** from which the drain contact **53** protrudes. One lead **54**, **55** is positioned on each side of the drain lead **53**. The gate electrode **18** of the transistor device **51** is electrically connected to a drain lead **54** by a bond wire **56**. The first load electrode **17** of the transistor device **51** is electrically connected to the anode **57** of the diode **52** and to the remaining third lead **55** of the leadframe **13** by a contact clip **59**. The contact clip **59** comprises a web portion **60** which extends between the first load electrode **17** of the transistor **51** and the anode **57** of the diode. A leg portion **61** extends from the web portion **60** such that the distal end of the leg portion **61** is positioned on the upper surface **63** of the lead **55** which provides a source/anode lead. The diode **52** is electrically connected in parallel with the MOSFET device **51** and, more particularly, the diode **52** is a freewheeling diode.

The electronic component **50** provides a multi-chip module comprising a transistor **51** coupled in parallel with a freewheeling diode **52** which can be used in known circuits. The electronic component **50** may be used as part of the circuit to provide a full bridge to drive an ac motor, for example. If a three phase ac motor is to be driven, the full bridge comprises six electronic components **50**. The electronic component **50** may also be used in a half bridge circuit for driving a dc motor.

Of the use of a single contact clip **59** to provide an electrical connection between the source electrode **17** of the transistor **51**, the anode **57** of the diode **52** and a common lead **55** provides an electronic component **50** with a compact internal rewiring structure. The use of a contact clip **59** provides an electrically conductive contact element with a large cross-sectional area and a low resistance. Furthermore, the contact area between the contact clip **59** and the source electrode **17** of the transistor **51** and between the contact clip **59** and the anode **57** of the diode **52** may be increased so as to reduce the contact resistance. Furthermore, the electrical connection between the physically separate transistor device **51** and the diode **52** is provided by a single contact element thus simplifying the manufacture of the contacting within the electronic component **50**.

The form of the contact clip **50** is selected so as to extend between the source electrode **17** of the transistor device **51**, the anode **58** of the diode **52** and the common lead **55** of the leadframe **13**. The lateral extent and form as well as the vertical form and the extent of the contact clip **59** may be adjusted by stamping and pressing the contact clip from a metal sheet, for example a copper sheet. The form of the web portion **60** and of the leg portion **61** may be selected so as to increase the contact area between the contact clip **59** and the source electrode **17** and anode **57** while ensuring that the gate electrode **18** of the transistor device **51** remains uncovered by the contact clip **59**. The contact clip **59** may be mounted on, and electrically connected to, the source electrode **17** and anode **57** as well as the lead **55** of the lead frame **30** by, in each case, a soft solder joint.

Alternatively, the n-channel power MOSFET device **51** may be an IGBT device. The electronic component **50** may be provided in the form of a package which conforms to a standard JEDEC package type, such as a TO-type package, for example, a TO-252 package.

While the foregoing has been particularly shown and described with reference to particular embodiment thereof, it will be understood by those skilled in the art that changes in the form and details may be made without departing from the spirit and scope thereof. It is to be understood that various changes may be made in adapting to different embodiment without departing from the broader concept disclosed herein and comprehend by the claims that follows.

What is claimed is:

**1**. An electronic component, comprising:

a plurality of semiconductor devices, each comprising a first side and a second side opposing the first side, wherein the first side comprises a first load electrode, wherein the first side of at least one semiconductor device of the plurality of semiconductor devices further comprises a control electrode;

a leadframe comprising a device carrier portion and a plurality of leads, the plurality of leads being arranged at distances from the device carrier portion;

wherein the second side of at least two semiconductor devices of the plurality of semiconductor devices is mounted on the device carrier portion of the leadframe, and

a contact clip extending between the first side of the at least two semiconductor devices and at least one lead of the leadframe to electrically connect the first load electrode of said at least two semiconductor devices to said at least one lead.

**2**. The electronic component according to claim **1**, wherein the contact clip comprises a web portion providing a contact to the first load electrode of said at least two semiconductor devices and at least one leg portion protruding from the web portion and providing a contact to the at least one lead.

**3**. An electronic component, comprising:

a plurality of semiconductor devices, each comprising a first side and a second side opposing the first side, wherein the first side comprises a first load electrode, wherein the first side of at least one semiconductor device of the plurality of semiconductor devices further comprises a control electrode;

a leadframe comprising a device carrier portion and a plurality of leads, the plurality of leads being arranged at distances from the device carrier portion;

wherein the second side of at least two semiconductor devices of the plurality of semiconductor devices is mounted on the device carrier portion of the leadframe, and

a contact clip extending between the first side of the at least two semiconductor devices and at least one lead of the leadframe to electrically connect the first load electrode of said at least two semiconductor devices to said at least one lead; and

wherein the contact clip comprises a general T-shape.

**4**. An electronic component, comprising:

a plurality of semiconductor devices, each comprising a first side and a second side opposing the first side, wherein the first side comprises a first load electrode, wherein the first side of at least one semiconductor

device of the plurality of semiconductor devices further comprises a control electrode;

a leadframe comprising a device carrier portion and a plurality of leads, the plurality of leads being arranged at distances from the device carrier portion;

wherein the second side of at least two semiconductor devices of the plurality of semiconductor devices is mounted on the device carrier portion of the leadframe, and

a contact clip extending between the first side of the at least two semiconductor devices and at least one lead of the leadframe to electrically connect the first load electrode of said at least two semiconductor devices to said at least one lead;

wherein the contact clip comprises a web portion and at least one leg portion protruding from the web portion and; wherein the lower surface of the web portion comprises two contact areas adapted for providing a contact to the load electrode of said at least two semiconductor devices and the lower surface of the leg portion comprises a contact area adapted for providing a contact to the upper surface of at least one lead of the leadframe.

**5**. An electronic component, comprising:

two semiconductor devices, each comprising a first side and a second side opposing the first side, wherein the first side comprises a first load electrode, and wherein the first side of at least one semiconductor device further comprises a control electrode;

a leadframe comprising two device carrier portions, which are physically separate from one another, and a plurality of leads, the plurality of leads being arranged at distances from the device carrier portions;

wherein the second side of one of the two semiconductor devices is mounted on each of the two device carrier portions of the leadframe, and

a contact clip extending between the first sides of the two semiconductor devices and at least one lead of the leadframe to electrically connect the first load electrodes of the two semiconductor devices to said at least one lead.

**6**. The electronic component according to claim **5**, wherein the two semiconductor devices are transistors, wherein the first side of the transistors comprises a first load electrode and a control electrode.

**7**. The electronic component according to claim **6**, wherein the web portion of the contact clip is positioned on the first load electrode of the two transistors and the control electrodes of the two transistors are uncovered by the contact clip.

**8**. The electronic component according to claim **6**, wherein the first load electrode of each of the two transistors is a source electrode.

**9**. The electronic component according to claim **6**, wherein the two transistors are one of a vertical transistor and a lateral transistor.

**10**. The electronic component according to claim **1**, wherein one of said at least two semiconductor devices is a transistor and one of said at least two semiconductor devices is a diode.

**11**. The electronic component according to claim **10**, wherein the diode is a free-wheeling diode.

**12**. The electronic component according to claim **1**, further comprising plastic encapsulation compound, the plastic encapsulation compound encapsulating the semiconductor devices.

**13**. The electronic component according to claim **12**, wherein the contact clip comprises an upper side and a lower side, the upper side of the contact clip being embedded in the plastic encapsulation compound.

**14**. The electronic component according to claim **12**, wherein the contact clip comprises an upper side and a lower side, the upper side of at least a portion of the contact clip being free of the plastic encapsulation compound.

**15**. An electronic component, comprising:

a plurality of semiconductor transistor devices, each comprising a first side and a second side opposing the first side, wherein the first side comprises a first load electrode and a control electrode and the second side comprises a second load electrode;

a leadframe comprising two device carrier portions and a plurality of leads, the plurality of leads being arranged at a distance from the device carrier portion;

wherein the second side of one of the plurality of semiconductor transistor devices is mounted on each of two device carrier portions of the leadframe,

a contact clip extending between the first side of at least two semiconductor transistor devices of said plurality of semiconductor devices and at least one lead of the leadframe to electrically connect the first load electrode of the at least two semiconductor transistor devices to the at least one lead,

plastic encapsulation encapsulating the semiconductor transistor devices, at least portions of the upper surface of the device carrier portions and at least portions of the upper surface of the plurality of leads.

**16**. The electronic component according to claim **15**, wherein at least two semiconductor devices are one of a MOSFET and an IGBT and the first load electrode is a source electrode.

**17**. The electronic component according to claim **15**, wherein the contact clip is fully encapsulated by the plastic encapsulation.

**18**. The electronic component according to claim **15**, wherein the contact clip is positioned within the package so that a surface of the contact clip is uncovered by the plastic encapsulation.

**19**. A circuit, comprising:

a plurality of semiconductor transistor devices, each comprising a first side and a second side opposing the first side, wherein the first side comprises a first load electrode and a control electrode and the second side comprises a second load electrode, and

a contact clip extending between the first load electrode of at least two semiconductor transistors devices of said plurality of semiconductor transistor devices and providing a common contact,

wherein the circuit is adapted to provide synchronous rectification.

**20**. The circuit according to claim **19**, wherein the plurality of semiconductor transistor devices are one of n-channel devices or p-channel devices.

**21**. The electronic component of claim **1** wherein at least two of the plurality of semiconductor devices are mounted on the device carrier portion of the leadframe and positioned laterally adjacent to each other.

**22**. The electronic component of claim **1** wherein the second sides of at least two of the plurality of semiconductor devices are mounted directly on the device carrier portion of the leadframe.

**23**. The electronic component of claim **1** wherein the plurality of leads are positioned laterally adjacent the device carrier portion of the leadframe.

* * * * *