US006081724A

United States Patent [19]

Wilson

[11] **Patent Number: 6,081,724**

[45] **Date of Patent: Jun. 27, 2000**

[54] **PORTABLE COMMUNICATION DEVICE AND ACCESSORY SYSTEM**

[75] Inventor: **Nathaniel B. Wilson**, San Diego, Calif.

[73] Assignee: **Qualcomm Incorporated**, San Diego, Calif.

[21] Appl. No.: **08/593,305**

[22] Filed: **Jan. 31, 1996**

[51] **Int. Cl.**[7] **H04Q 7/32**

[52] **U.S. Cl.** **455/462**; 455/569

[58] **Field of Search** 455/403, 462, 455/465, 420, 575, 569

[56] **References Cited**

U.S. PATENT DOCUMENTS

4,369,516	1/1983	Byrns	379/359
4,654,655	3/1987	Kowalski	340/825.5
5,095,503	3/1992	Kowalski	455/403
5,365,573	11/1994	Sakamoto et al.	455/462
5,524,045	6/1996	Yazawa	455/462
5,561,712	10/1996	Nishihara	455/462

Primary Examiner—Dwayne D. Bost
Assistant Examiner—Myron K. Wyche
Attorney, Agent, or Firm—Russel B. Miller; Charles D. Brown; Pavel Kalousek

[57] **ABSTRACT**

A portable communications device and accessory system which enables both voice and control commands to be communicated between a portable communication device and external accessories over a single flexible digital interface. When the portable communication device is interfaced to external accessories, such as a power booster and hands-free kit, a microprocessor configures the serial communications bus to pass both the digital voice data and digital control commands to and from the external power booster and the hands-free kit. The external hands-free kit contains its own auxiliary CODEC for encoding analog voice signals and decoding the digital voice data. When the portable communication device is not interfaced with external accessories, the microprocessor configures the serial communication bus to pass the digital voice data to and from an internal CODEC for use with the portable device's own microphone and speaker.

10 Claims, 3 Drawing Sheets

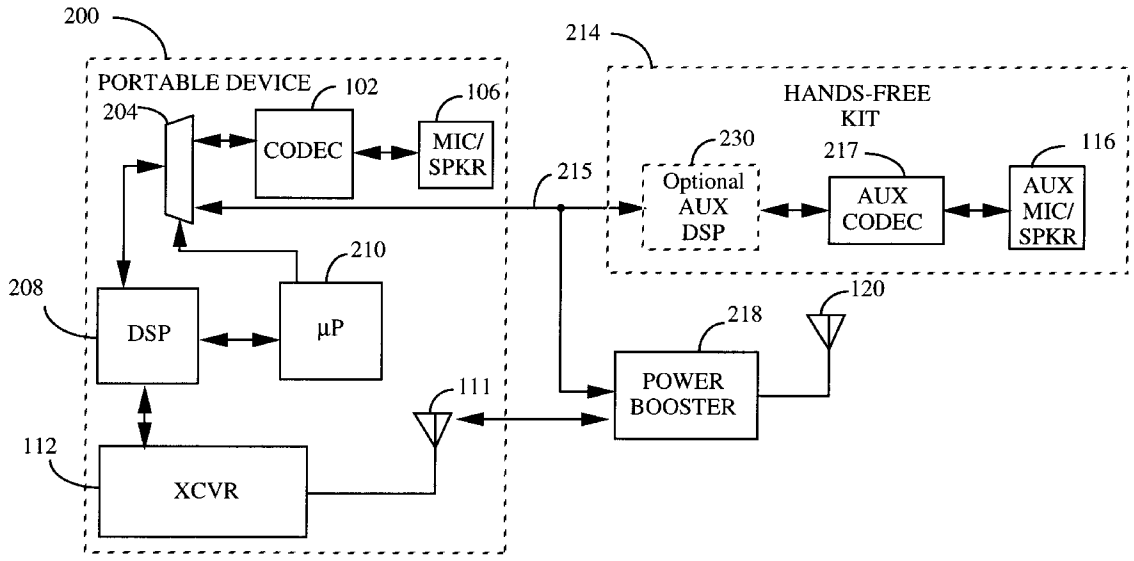

Samsung v. Cerence
IPR2024-00978
Exhibit 1010

--PRIOR ART--

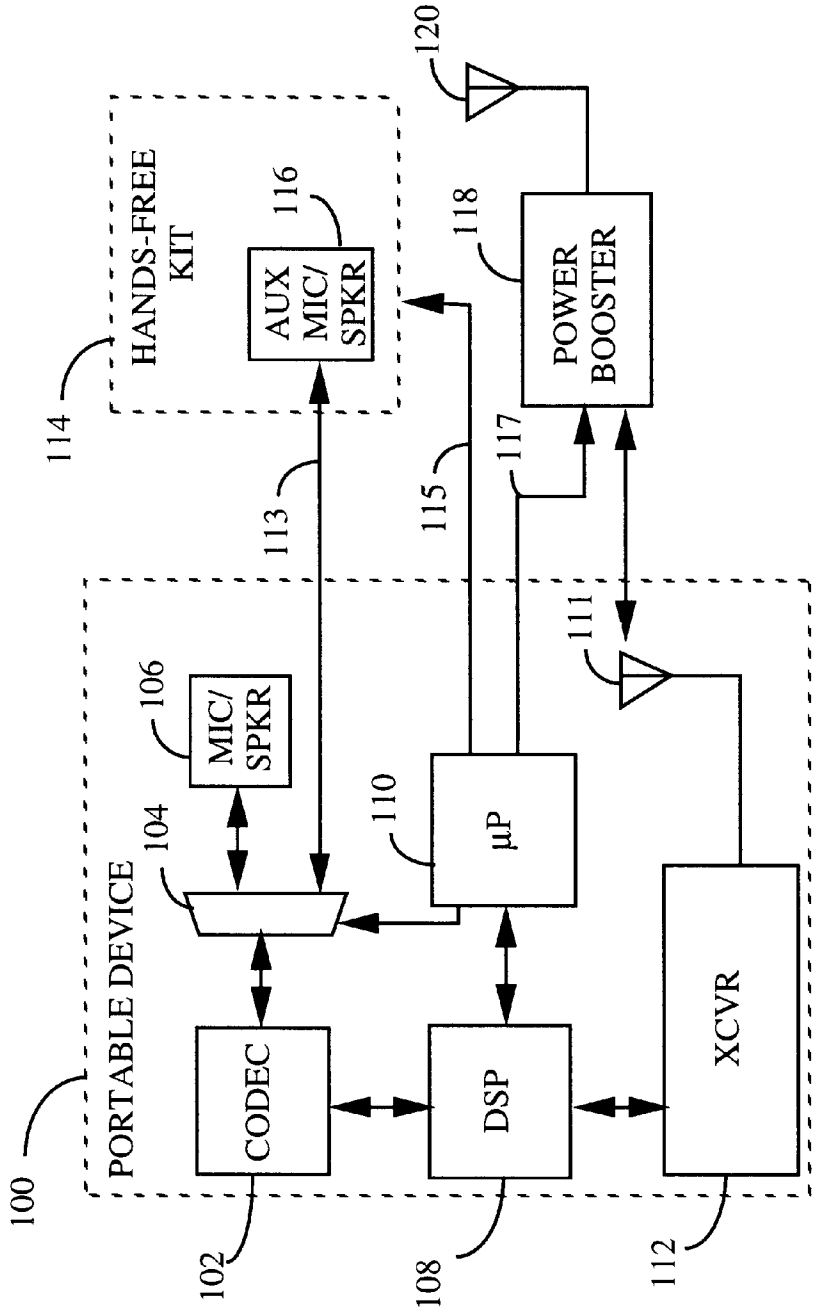

FIG. 1

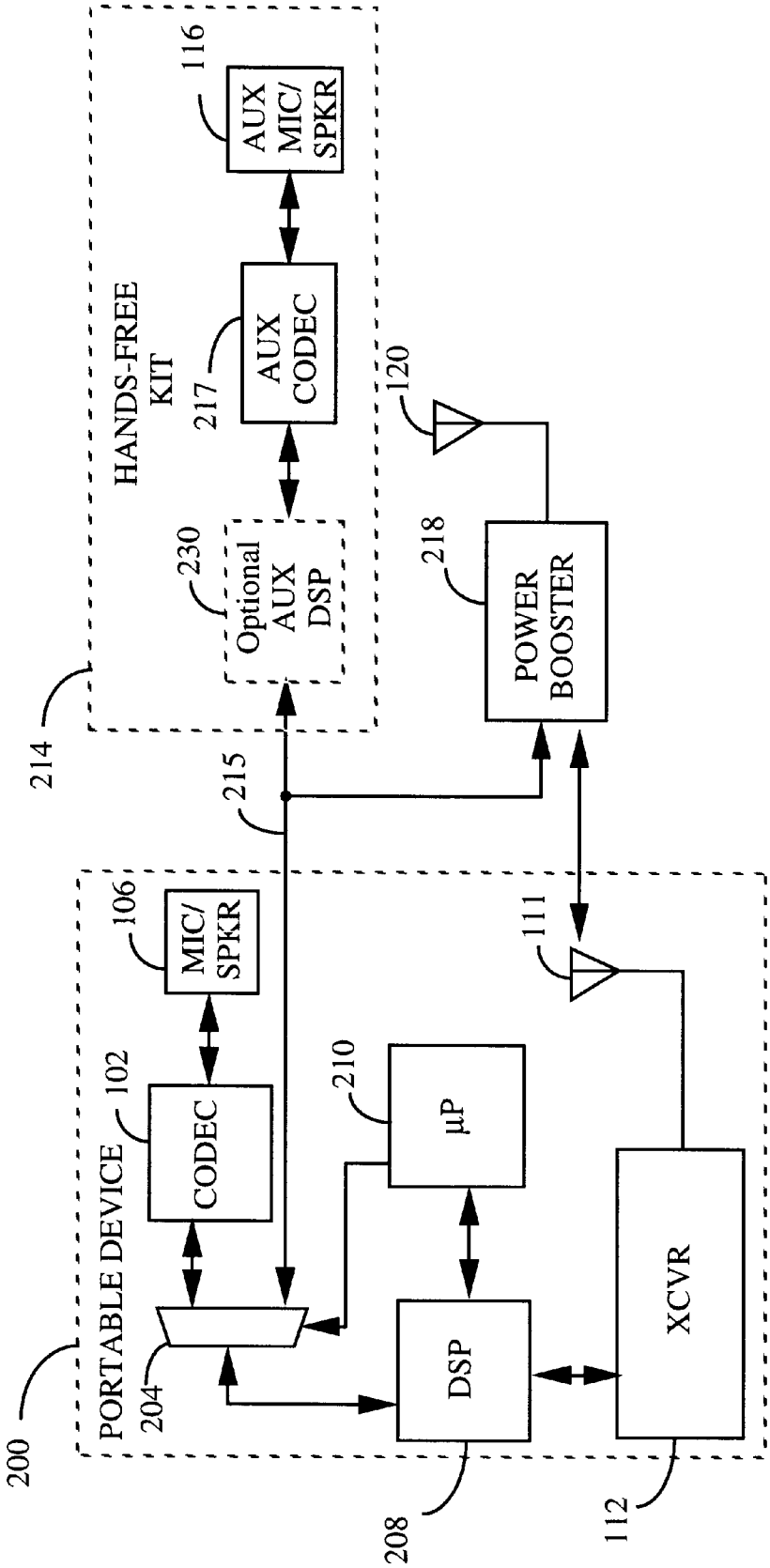
HANDS-FREE KIT
214
AUX MIC/ SPKR
116
AUX CODEC
217
Optional AUX DSP
230
120
POWER BOOSTER
218
215
PORTABLE DEVICE
200
MIC/ SPKR
106
CODEC
102
204
μP
210
DSP
208
XCVR
112
111

FIG. 2

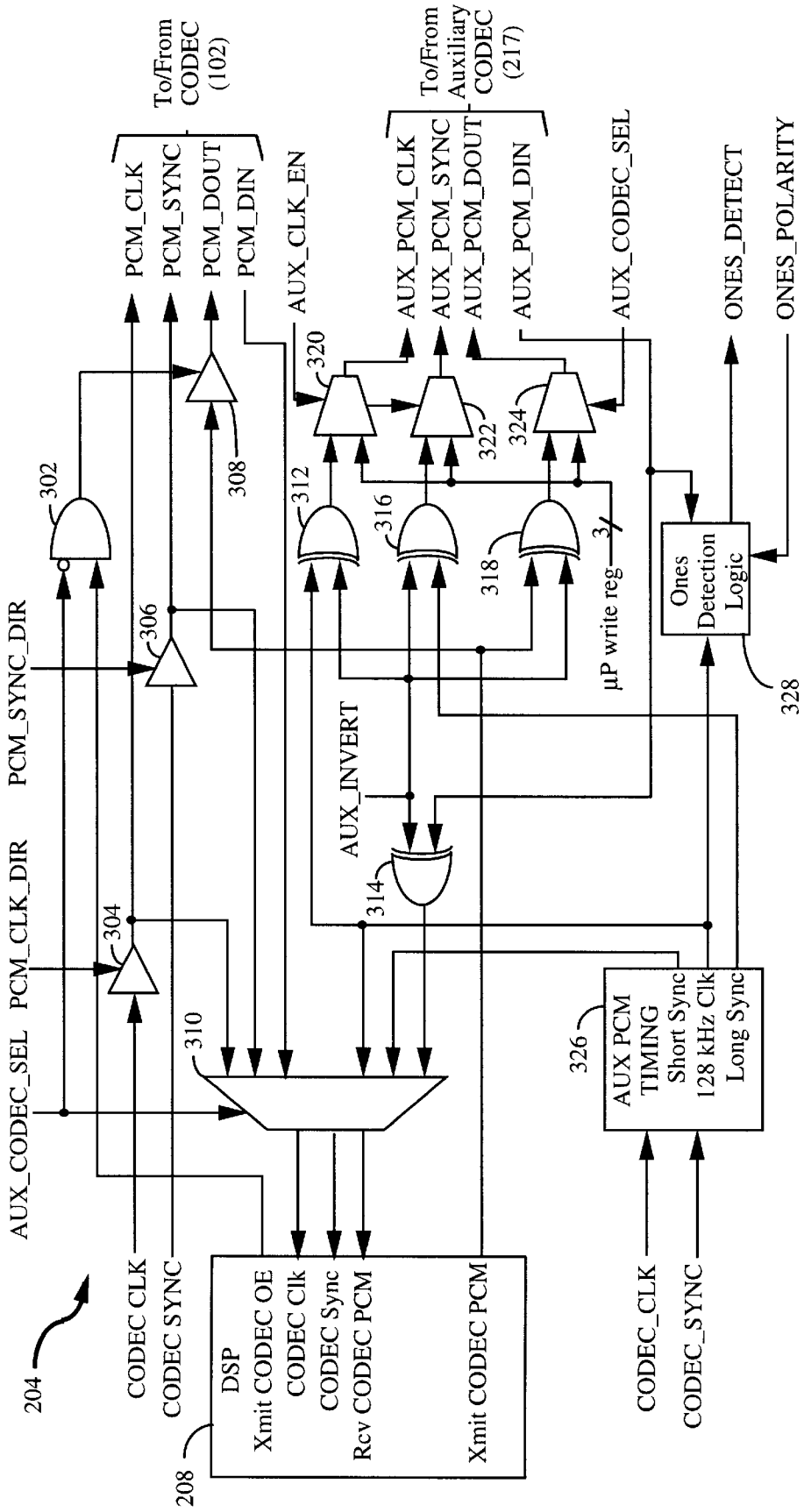
To/From CODEC (102)
To/From Auxiliary CODEC (217)
PCM_CLK
PCM_SYNC
PCM_DOUT
PCM_DIN
AUX_CLK_EN
AUX_PCM_CLK
AUX_PCM_SYNC
AUX_PCM_DOUT
AUX_PCM_DIN
AUX_CODEC_SEL
ONES_DETECT
ONES_POLARITY
PCM_SYNC_DIR
PCM_CLK_DIR
AUX_CODEC_SEL
AUX_INVERT
μP write reg
3
Ones Detection Logic
AUX PCM TIMING
Short Sync
128 kHz Clk
Long Sync
DSP
Xmit CODEC OE
CODEC Clk
CODEC Sync
Rcv CODEC PCM
Xmit CODEC PCM
CODEC CLK
CODEC SYNC
CODEC_CLK
CODEC_SYNC
204
208
302
304
306
308
310
312
314
316
318
320
322
324
326
328

FIG. 3

PORTABLE COMMUNICATION DEVICE AND ACCESSORY SYSTEM

BACKGROUND OF THE INVENTION

I. Field of the Invention

The present invention relates generally to portable communication systems. More particularly, the present invention relates to novel and improved portable communications device and accessory system which provides full-duplex communications between a portable communication device and external accessories over a flexible digital interface.

II. Description of the Related Art

There are presently multiple types of cellular radiotelephone systems operating. These systems include the frequency modulated (FM) advanced mobile phone system (AMPS) and two digital cellular systems: time division multiple access (TDMA and GSM), and code division multiple access (CDMA). The digital cellular systems are being implemented to handle capacity problems that AMPS is experiencing. Dual-mode CDMA/FM radiotelephones exist which are selectively operative in either FM or CDMA modes. Telecommunications Industry Association (TIA)/Electronic Industries Association (EIA) Interim Standard 95, entitled "Mobile Station-Base Station Compatibility Standard for Dual-Mode Wideband Spread Spectrum Cellular System" sets forth the requirements and standards for a dual-mode radiotelephone which is selectively operative in either FM or CDMA modes.

A typical portable cellular radiotelephone may be interfaced with one or more external accessories. For example, the portable telephone user may desire to use his portable radiotelephone in his car while driving, and thus interface it with a hands-free speakerphone, a power booster, and/or a voice-operated dialer. The hands-free speakerphone (or hands-free "kit") allows the user to make phone calls, via an external loudspeaker and microphone, without holding the telephone. The power booster couples radio frequency (RF) signal to and from the portable radiotelephone's own antenna, amplifying the RF signal for the higher power transmission and reception that is desirable when operating off of a car battery. A voice dialer responds to verbal commands from the user, dialing from a set of preprogrammed telephone numbers according to the voice commands. These accessories are often used at the same time as part of a car adapter kit.

In the prior art, each of these external accessories requires at least one separate interface to the portable radiotelephone. For example, consider the typical prior art portable radiotelephone accessory system illustrated in FIG. **1**. The portable device **100**, which could be a cellular phone, a personal communication services (PCS) phone, or similar device, comprises microphone and speaker **106**, multiplexer **104**, encoder/decoder (CODEC) **102**, digital signal processor (DSP) **108**, microprocessor **110**, transceiver **112**, and antenna **111**.

In operation, antenna **111** receives an RF signal which is subsequently downconverted and demodulated by transceiver **112**. The demodulated digital signal is passed to DSP **108** for audio-band processing, and then to CODEC **102** for conversion to an analog voice signal. For transmission, the reverse path is followed, i.e. the analog voice signal is converted to a digital signal by CODEC **102**, processed by DSP **108**, and passed to transceiver **112** for upconversion and modulation before transmission on antenna **111**. When portable device **100** is in a portable mode (i.e. when not connected to external accessories) microprocessor **110** configures multiplexer **104** to pass the analog voice signal to and from microphone and speaker **106**, which are housed in portable device **100**. However, when portable device **100** is interfaced with hands-free kit **114**, microprocessor **110** configures multiplexer **104** to pass the analog voice signal, over analog interface **113**, to and from auxiliary microphone and speaker **116** which are housed in hands-free kit **114**. In addition, when portable device **100** is interfaced with power booster **118**, RF signals are received and transmitted by external antenna **120**, amplified by power booster **118**, and coupled to and from antenna **111** in portable device **100**.

The difficulty with the prior art is encountered when one desires to pass control commands to hands-free kit **114** or power booster **118**, or to control other external accessories. Since analog interface **113** carries analog voice signals, it is not suited to carry control commands to external accessories. As such, command interfaces **115**, **117**, are necessary to pass control commands to hands-free kit **114** and power booster **118**, respectively. Commands to hands-free kit **114** may include instructions to automatically turn auxiliary microphone and speaker **116** on and off, or to automatically mute the car's installed stereo during a hands-free call. Commands to power booster **118** may include transmit and receive power control commands. Thus, as can be seen from FIG. **1**, at least one separate interface **113**,**115**,**117** must be used to interface portable device **100** with each desired external accessory **114**,**118**, adding cost and complexity.

Another difficulty with the prior art system of FIG. **1** is that when portable device **100** is interfaced with hands-free kit **114** (i.e. when operating in hands-free mode), the normal full-duplex operation of simultaneous talk and listen is suspended. This is required to prevent undesired feedback between the auxiliary speaker and microphone **116**. Typically, the hands-free mode of operation is controlled by a voice-activated switch (VOX) which switches between the talk and listen paths according to the activity level of the path. If portable device **100** is operating in an FM mode, the talk and listen paths are both simultaneously enabled during hands-free operation, however the inactive path is always attenuated to prevent acoustic oscillation. If portable device **100** is operating in a digital mode, the inactive path is muted whenever active voice frames arrive from the base station. Unfortunately, the VOX switching works well only when both portable device **100** and the calling unit are in relatively quiet environments. For instance, if the caller is in a noisy public place, and the user of portable device **100** is in hands-free operation in the relative quiet of a car interior, the caller is likely to hear only broken portions of the conversation because the VOX will favor the caller's background noise over the speech of the user of portable device **100**.

What is needed is a portable communication device and accessories that communicate both voice and command data over a single flexible interface, and also provides for full-duplex communication between the portable device and the accessories.

SUMMARY OF THE INVENTION

The present invention is a novel and improved portable communications device and accessory system which enables both voice and control commands to be communicated in full duplex between a portable communication device and external accessories over a single flexible digital interface. When the portable communication device is interfaced to external accessories, such as a power booster and hands-free kit, a microprocessor configures the serial communications bus to pass both the digital voice data and digital control

commands to and from the external power booster and the hands-free kit. The external hands-free kit contains its own auxiliary CODEC for encoding analog voice signals and decoding the digital voice data. When the portable communication device is not interfaced with external accessories, the microprocessor configures the serial communication bus to pass the digital voice data to and from an internal CODEC for use with the portable device's own microphone and speaker.

BRIEF DESCRIPTION OF THE DRAWINGS

The features, objects, and advantages of the present invention will become more apparent from the detailed description set forth below when taken in conjunction with the drawings in which like reference characters identify correspondingly throughout and wherein:

FIG. **1** is a block diagram of a prior art portable communication device and accessory system;

FIG. **2** is a block diagram of the portable communication device and accessory system of the present invention; and

FIG. **3** is a logical diagram of the serial communication bus multiplexer of the present invention.

DETAILED DESCRIPTION OF THE PREFERRED EMBODIMENTS

FIG. **2** illustrates a block diagram of the portable communication device and accessory system of the present invention. In the preferred embodiment, hands-free kit **214** serves as a physical "cradle" to receive portable device **200**, has a mechanical hookswitch (not shown) to determine when portable device **200** is in the cradle (an "on-hook" condition) and when portable device **200** is out of the cradle (an "off-hook" condition). When portable device **200** is connected to hands-free kit **214** and is in the cradle, it switches to operating in a hands-free mode. Whenever portable device **200** is out of the cradle, it operates in a portable mode. Portable device **200** may also be interfaced with hands-free kit **214**, but still out of the cradle (i.e. off hook).

Antenna **111**, transceiver **112**, CODEC **102**, and microphone and speaker **106** of FIG. **2** operate as described with reference to FIG. **1**. However, in the present invention, microprocessor **210** configures serial communication bus multiplexer **204** to pass digital voice data between DSP **208** and either CODEC **102** or auxiliary CODEC **217** in hands-free kit **214**, respectively. When portable device **200** is operating in a portable mode (i.e. when it is either not connected to hands-free kit **214**, or is connected to hands-free kit **214** but out of the cradle), microprocessor **210** configures serial communication bus multiplexer **204** to pass digital voice data between DSP **208** and CODEC **102**. When portable device **200** is operating in a hands-free mode (i.e. when it is connected to hands-free kit **214** and in the cradle), microprocessor **210** configures serial communication bus multiplexer **204** to pass both digital voice data and control commands between DSP **208** and auxiliary CODEC **217** over digital interface **215**. Control commands intended for power booster **218**, or for an additional external accessory, such as a voice dialer (not shown) are also sent along with the digital voice data over digital interface **215**. In this manner, a single flexible interface between portable communication device **200** and external accessories **214**, **218** is accomplished which reduces the complexity of the interface over the prior art of FIG. **1**. It should be noted that the serial communication bus multiplexer **204** of the present invention is better suited to implementation using silicon VLSI techniques than is the analog multiplexer **104** (see FIG. **1**) of the prior art.

In the preferred embodiment, CODEC **102** and auxiliary CODEC **217** convert an analog voice signal to pulse-code modulated (PCM) digital format. Optionally, the PCM format may be a compressed μ-law or a-law format, or two's-complement linear format.

FIG. **3** illustrates the preferred embodiment of the serial communication bus multiplexer **204**, which multiplexes PCM data between DSP **208**, CODEC **102**, and auxiliary CODEC **217** under control of microprocessor **210**. In the preferred embodiment, serial communication bus provides a 128 kbps path in full-duplex, allocated as 64 kbps for PCM audio and 64 kbps for commands to the accessories.

In operation, DSP **208** sets XMIT_CODEC_OE high to enable PCM data output, and drives PCM data out on the signal XMIT_CODEC_PCM to tri-state buffer **308** and through exclusive-or (XOR) gate **324**, which provides selectable signal polarity, to multiplexer **324**. When portable device **200** is in a portable mode (i.e. off hook), microprocessor **210** sets AUX_CODEC_SEL low, enabling AND gate **302** and tri-state buffer **308**, thus driving PCM data out to CODEC **102** on the PCM_DOUT line. When AUX_CODEC_SEL is low, multiplexer **310** switches to accept data from CODEC **102** over the PCM_DIN line. Additionally, microprocessor **210** sets PCM_CLK_DIR and PCM_SYNC_DIR high to enable tri-state buffers **304** and **306**, thus enabling clock and sync signals to CODEC **102**.

Furthermore, by setting AUX_CODEC_SEL low, microprocessor **210** switches multiplexer **324** to disable PCM data from being driven out to auxiliary CODEC **217** on the AUX_PCM_DOUT line. Optionally, microprocessor **210** may set AUX_CLK_EN low to switch multiplexers **320** and **322**, thus disabling clock and sync signals to auxiliary CODEC **217**.

When the portable device **200** is operating in hands-free mode (i.e. in the cradle), microprocessor **210** sets AUX_CODEC_SEL high, switching multiplexer **324** to pass PCM data from DSP **208** through XOR gate **318** out on the AUX_PCM_DOUT line to auxiliary CODEC **217**. When AUX_CODEC_SEL is high, multiplexer **310** switches to accept data from auxiliary CODEC **217** over the AUX_PCM_DIN line. Additionally, microprocessor **210** sets AUX_CLK_EN high, switching multiplexers **320** and **322** to provide clock and sync signals to auxiliary CODEC **217**.

Furthermore, by setting AUX_CODEC_SEL high, microprocessor **210** disables AND gate **302** and tri-state buffer **308**, thus preventing PCM data from being driven out on the PCM_DOUT line to CODEC **102**. Optionally, microprocessor **210** may set PCM_CLK_DIR and PCM_SYNC_DIR low, disabling tri-state buffers **304** and **306**, and thus disabling clock and sync signals to CODEC **102**.

Auxiliary PCM timing generator **326** provides the clock and sync signals used by DSP **208**, and auxiliary CODEC **217** to transfer synchronized audio data. The transceiver **112** (see FIG. **1**) generates the signals CODEC_CLK and CODEC_SYNC so that CODEC **102**, DSP **208** and auxiliary PCM timing generator **326** will operate synchronously with respect to the rest of the system. The clock signal is used for demarking each bit of serial data through serial communication bus multiplexer **204**, whereas the sync signal is used to align DSP **208** and CODEC **102** or auxiliary CODEC **217** to the start of each audio sample word. In the preferred embodiment, CODEC **102** uses a clock signal of 2.048 Mhz. However, auxiliary CODEC **217** utilizes a 128 kHz clock signal, which is better suited to send down a long cable (not shown) which may connect hands-free kit **214**

with portable device **200**. In order to interface with common types of auxiliary CODEC **217**, a "Long Sync" signal is provided to auxiliary CODEC **217** which is a 50% duty cycle, 8 kHz synchronization signal. This "Long Sync" format is supported by many CODECs which are commercially available.

Additionally, in many cases, a long cable run (not shown) may exist between portable device **200** and hands-free kit **214**. Such a long cable run may introduce the need for a Schmitt-trigger receiver (not shown) to recondition the digital signals. A typical Schmitt-trigger receiver introduces an undesirable signal inversion. As such, the present invention provides for data inversion controlled by microprocessor **210** via the AUX_INVERT signal. When AUX_INVERT is high XOR gates **312**,**316**, and **318**, invert the 128 kHz clock signal, the long sync signal, and the output PCM data from DSP **208**, respectively, for use with auxiliary CODEC **217**. Additionally, the PCM data from auxiliary CODEC **217** to DSP **208** is inverted by XOR gate **314**.

Ones detection logic **328** indicates to microprocessor **210**, via the signal ONES_DETECT, whether portable device **200** is interfaced with hands-free kit **214** in the portable mode (i.e. off hook) or in the hands-free mode (i.e. on hook). As previously mentioned, when portable device **200** is in the cradle, auxiliary CODEC **217** drives PCM data to DSP **208** on the AUX_PCM_DIN line. However, when portable device **200** is out of the cradle, but still interfaced with hands-free kit **214**, auxiliary CODEC **217** drives out a series of logical zeroes on the AUX_PCM_DIN line, which may be logical ones if polarity inversion is used. The stream of ones (or zeroes) is input to ones detection logic **328**. When ones detection logic **328** detects this stream of incoming ones (or zeroes), it sets ONES_DETECT high, notifying microprocessor **210** to switch to the internal CODEC **102**. As previously stated, these ones are not passed to DSP **208** because they are switched out by multiplexer **310** under control of AUX_CODEC_SEL. This allows the user to hold portable device **200** normally, having a private conversation, while still being able to take advantage of the higher power transmission and reception provided by power booster **218**.

Another advantage of the present invention is that since the interface between portable device **200** and hands-free kit **214** is a digital interface in full-duplex, audio processing of the echoes induced by hands-free operation may be conveniently implemented in DSP **208**. This allows a full-duplex conversation when in the hands-free mode rather than having to mute the non-active path as required by the prior art. Alternatively, a optional auxiliary DSP **230** may be included in hands-free kit **214**, enabling both echo-canceling and voice-activated dialing to be performed internally to hands-free kit **214** itself. In sharp contrast, the prior art system of FIG. **1**, without the serial communication bus multiplexer **204** of the present invention, would require two auxiliary CODECs (not shown) and an auxiliary DSP (not shown) to accomplish the same task.

The previous description of the preferred embodiments is provided to enable any person skilled in the art to make or use the present invention. The various modifications to these embodiments will be readily apparent to those skilled in the art, and the generic principles defined herein may be applied to other embodiments without the use of the inventive faculty. Thus, the present invention is not intended to be limited to the embodiments shown herein but is to be accorded the widest scope consistent with the principles and novel features disclosed herein.

I claim:

1. A communication system having a portable mode and a non-portable mode, said communication system comprising:

a portable communication device for transmitting and receiving a communication signal, said portable communications device having a digital communication bus; and

at least one external accessory, coupled to said digital communications bus, said digital communications bus for exchanging digital audio data and control commands between said portable communication device and said at least one external accessory in full duplex when in said non-portable mode.

2. The communication system of claim **1** further comprising:

a digital signal processor, in said portable communication device and coupled to said digital communication bus, for digitally processing said communication signal;

a primary encoder/decoder, in said portable communication device and coupled to said digital communication bus, for converting said communication signal between a digital format and an analog format when in said portable mode;

an auxiliary encoder/decoder, in said at least one external accessory and coupled to said digital communication bus, for converting said communication signal between said digital format and said analog format when in said non-portable mode; and

a microprocessor, in said portable communication device and coupled to said digital communication bus, for configuring said digital communication bus to exchange said communication signal between said digital signal processor and said auxiliary encoder/decoder when in said non-portable mode, and for configuring said digital communication bus to exchange said communication signal between said digital signal processor and said primary encoder/decoder when in said portable mode.

3. The communication system of claim **2** wherein said at least one external accessory comprises a plurality of external accessories, said plurality of external accessories comprising:

a hands-free kit having a microphone, a speaker, and a hookswitch, said hands-free kit for receiving said portable communication device when in said non-portable mode, said hookswitch for generating an on-hook condition signal when in said non-portable mode and an off-hook condition when in said portable mode; and

a power booster for amplifying said communication signal.

4. The communication system of claim **3** wherein said digital communication bus comprises:

a plurality of multiplexers, for switching said communication signal between said digital signal processor and said primary encoder/decoder when in said portable mode, and for switching said communication signal between said digital signal processor and said auxiliary encoder/decoder when in said non-portable mode;

a detection circuit, for detecting said on-hook condition signal and said off-hook condition signal; and

a timing circuit, for distributing a clock signal and a synchronization signal to said digital signal processor, said primary encoder/decoder, said auxiliary encoder/decoder, and said detection circuit.

5. A portable radiotelephone for transmitting and receiving a communication signal, said portable radiotelephone having a portable mode and a non-portable mode, said portable radiotelephone interfacing with at least one external accessory when in said non-portable mode, said portable radiotelephone comprising:

a digital signal processor, for digitally processing said communication signal;

a digital communication bus, coupled to said digital processor, for exchanging said communication signal with a primary encoder/decoder when in said portable mode and with said at least one external accessory when in said non-portable mode; and

a microprocessor, coupled to said digital signal processor and said digital communication bus, for configuring said digital communication bus to exchange said communication signal between said digital signal processor and said at least one external accessory when in said non-portable mode, and for configuring said digital communication bus to exchange said communication signal between said digital signal processor and said primary encoder/decoder when in said portable mode.

6. The portable radiotelephone of claim 5 wherein said at least one external accessory comprises a hands-free kit having a microphone, a speaker, and a hookswitch, said hands-free kit for receiving said portable communication device when in said non-portable mode, said hookswitch for generating an on-hook condition signal when in said non-portable mode and an off-hook condition when in said portable mode, and wherein said digital communication comprises:

a plurality of multiplexers, for switching said communication signal between said digital signal processor and said primary encoder/decoder when in said portable mode, and for switching said communication signal between said digital signal processor and said hands-free kit when in said non-portable mode;

a detection circuit, for detecting said on-hook condition signal and said off-hook condition signal; and

a timing circuit, for distributing a clock signal and a synchronization signal to said digital signal processor, said primary encoder/decoder, said hands-free kit, and said detection circuit.

7. A method of exchanging data between a portable communication device and at least one external accessory in a communication system having a portable mode and a non-portable mode, said portable communication device transmitting and receiving a communication signal, said method comprising the steps of:

generating, in said portable communication device, accessory control commands when in said non-portable mode; and

digitally exchanging said accessory control commands and said communication signal between said portable communication device and said at least one external accessory over a full-duplex digital communication bus when in said non-portable mode.

8. The method of claim 7 further comprising the steps of:

digitally processing said communication signal;

converting, in said portable communication device, said communication signal between a digital format and an analog format when in said portable mode;

converting, in said at least one external accessory, said communication signal between said digital format and said analog format when in said non-portable mode;

configuring said digital communication bus to exchange said communication signal between said portable communication device and said at least one external accessory when in said non-portable mode.

9. The method of claim 8 wherein said at least one external accessory comprises a hands-free kit having a microphone, a speaker, and a hookswitch, the method further comprising the steps of:

generating, in said hands-free kit, an on-hook condition signal when in said non-portable mode and an off-hook condition when in said portable mode; and

providing said on-hook condition signal and said off-hook condition signal to said portable communication unit.

10. The method of claim 9 further comprising the steps of:

detecting, in said portable communication device, said on-hook condition and said off-hook condition; and

switching said communication signal between said portable communication device and said hands-free kit when said on-hook condition signal is detected.

* * * * *