US005870427A

United States Patent [19]

Tiedemann, Jr. et al.

[11] Patent Number: 5,870,427

[45] Date of Patent: Feb. 9, 1999

[54] **METHOD FOR MULTI-MODE HANDOFF USING PRELIMINARY TIME ALIGNMENT OF A MOBILE STATION OPERATING IN ANALOG MODE**

[75] Inventors: **Edward G. Tiedemann, Jr.**; **Alejandro Raul Holcman**, both of San Diego, Calif.

[73] Assignee: **Qualcomm Incorporated**, San Diego, Calif.

[21] Appl. No.: **481,119**

[22] Filed: **Jun. 1, 1995**

Related U.S. Application Data

[63] Continuation-in-part of Ser. No. 383,555, Jan. 31, 1995, Pat. No. 5,509,035, which is a continuation of Ser. No. 47,719, Apr. 14, 1993, abandoned.

[51] **Int. Cl.**[6] **H04L 25/00**

[52] **U.S. Cl.** **375/216**; 375/358; 375/367; 379/60; 455/33.2; 455/51.1; 455/54.2; 455/56.1; 370/332

[58] **Field of Search** 375/200, 205, 375/208, 354, 355–358, 362, 367, 371; 455/33.2, 49.1, 51.1, 54.1, 54.2, 56.1; 379/58–60; 370/310, 320, 324, 331–334

[56] **References Cited**

U.S. PATENT DOCUMENTS

4,807,259	2/1989	Yamanaka et al.	375/109
4,890,303	12/1989	Bader	375/107
5,136,614	8/1992	Hiramatsu et al.	375/1
5,146,585	9/1992	Smith, III	395/550
5,220,676	6/1993	LoGalbo et al.	455/33.2
5,229,996	7/1993	Backstrom et al.	370/100.1
5,257,401	10/1993	Dahlin et al.	455/33.2
5,257,404	10/1993	Goreham et al.	455/52.2
5,280,498	1/1994	Tymes et al.	375/1
5,280,501	1/1994	Owen	375/94
5,295,152	3/1994	Gudmundson et al.	375/1
5,313,489	5/1994	Menich et al.	375/1
5,355,515	10/1994	Sicher	455/33.2
5,517,674	5/1996	Rune	455/33.2
5,564,077	10/1996	Obayashi et al.	455/33.2

Primary Examiner—Stephen Chin
Assistant Examiner—Amanda T. Le
Attorney, Agent, or Firm—Russell B. Miller; Sean English

[57] **ABSTRACT**

A method for handoff of an analog connection within a cellular communication system which relies upon mobile station synchronization to a system time is disclosed herein. In order to reduce the acquisition time for a mobile station commencing operation in a digital mode, an estimate of master system time is transferred to the mobile station in analog mode before entering digital mode. The alignment operates within the protocols of existing analog systems, and hence requires only minimal changes in the mobile station. Time alignment may be initiated upon the base station sending to the mobile station a command to continually transmit a periodic signaling tone. The base station compares the phase of the signaling tone from the mobile station to a master system clock and determines an error signal. The base station notifies the mobile station to delay or advance in time the transmitted signaling tones based on the error signal. This procedure may continue until the calculated error falls below a predetermined level. Having attained time alignment, the base station is able to transfer to the mobile station absolute time of day information with increased accuracy. The mobile station is then commanded into digital mode where transition time is reduced to a level tolerable by the end user due to the performed alignment.

23 Claims, 10 Drawing Sheets

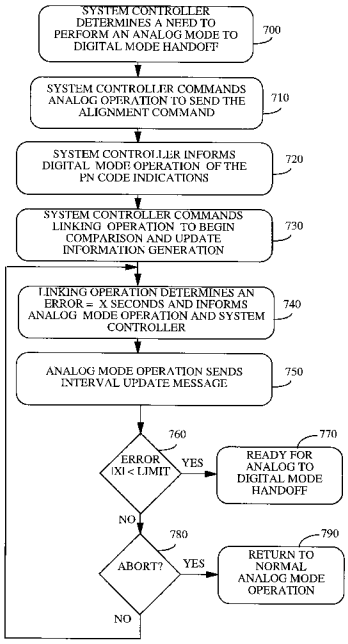

Samsung v. Cerence
IPR2024-00979
Exhibit 1009

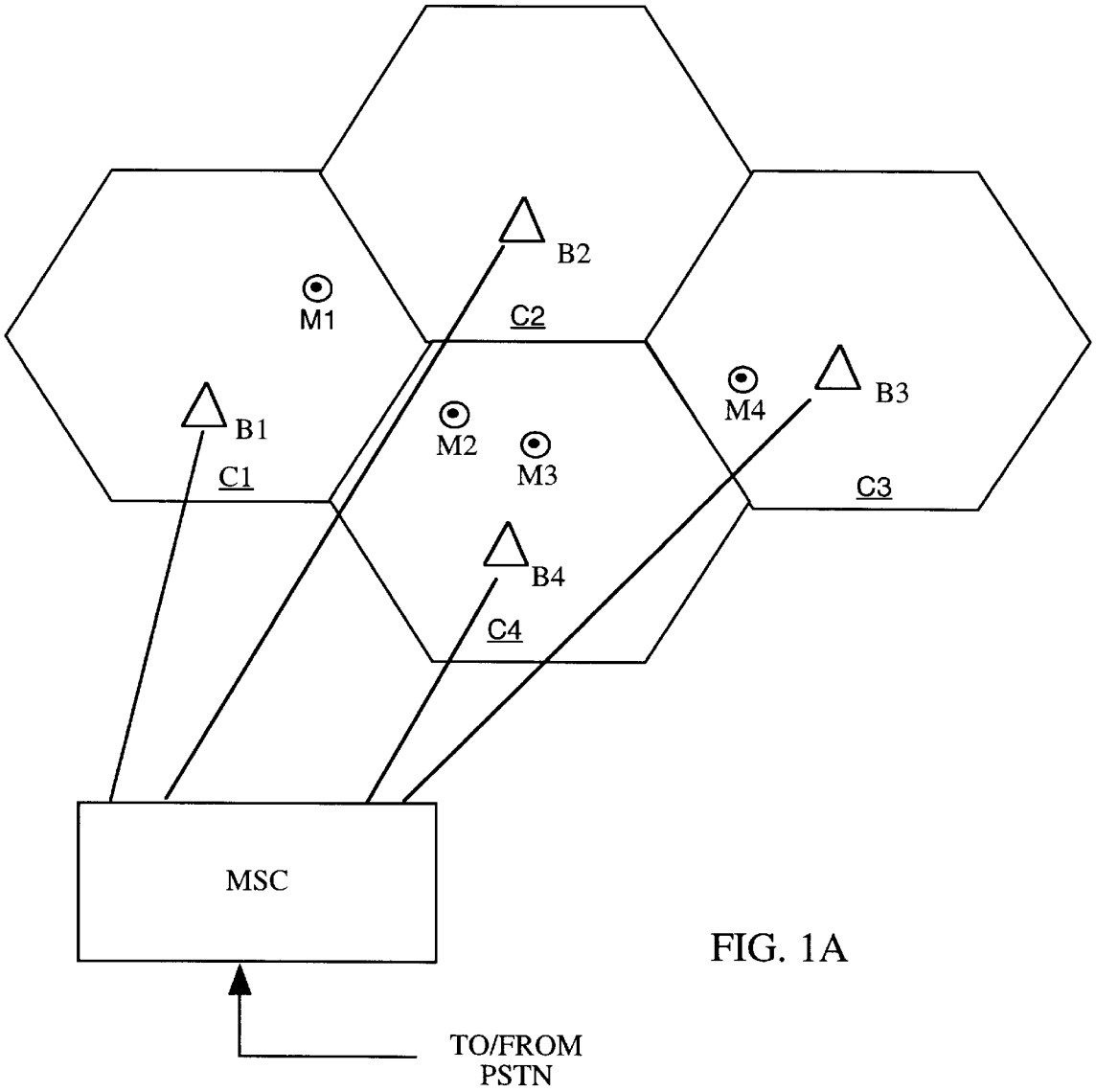

FIG. 1A

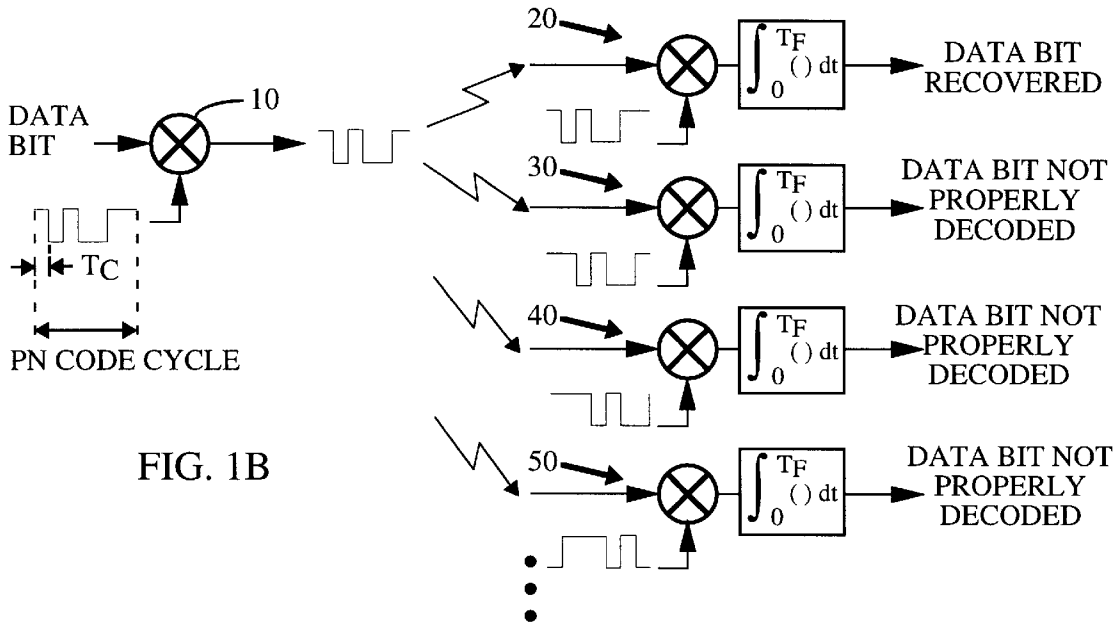

FIG. 1B

									INTEGRATION RESULT
A.	CODE PHASE 1	1	-1	1	-1	-1	1	1	
	RECEIVED SEQUENCE	1	-1	1	-1	-1	1	1	
	PRODUCT	1	1	1	1	1	1	1	SUM = 7
B.	CODE PHASE 2	1	1	-1	1	-1	-1	1	
	RECEIVED SEQUENCE	1	-1	1	-1	-1	1	1	
	PRODUCT	1	-1	-1	-1	1	-1	1	SUM = -1
C.	CODE PHASE 3	1	1	1	-1	1	-1	-1	
	RECEIVED SEQUENCE	1	-1	1	-1	-1	1	1	
	PRODUCT	1	-1	1	1	-1	-1	-1	SUM = -1
D.	CODE PHASE 4	-1	1	1	1	-1	1	-1	
	RECEIVED SEQUENCE	1	-1	1	-1	-1	1	1	
	PRODUCT	-1	-1	1	-1	1	1	-1	SUM = -1
E.	CODE PHASE 5	-1	-1	1	1	1	-1	1	
	RECEIVED SEQUENCE	1	-1	1	-1	-1	1	1	
	PRODUCT	-1	1	1	-1	-1	-1	1	SUM = -1
F.	CODE PHASE 6	1	-1	-1	1	1	1	-1	
	RECEIVED SEQUENCE	1	-1	1	-1	-1	1	1	
	PRODUCT	1	1	-1	-1	-1	1	-1	SUM = -1
G.	CODE PHASE 7	-1	1	-1	-1	1	1	1	
	RECEIVED SEQUENCE	1	-1	1	-1	-1	1	1	
	PRODUCT	-1	-1	-1	1	-1	1	1	SUM = -1

FIG. 2

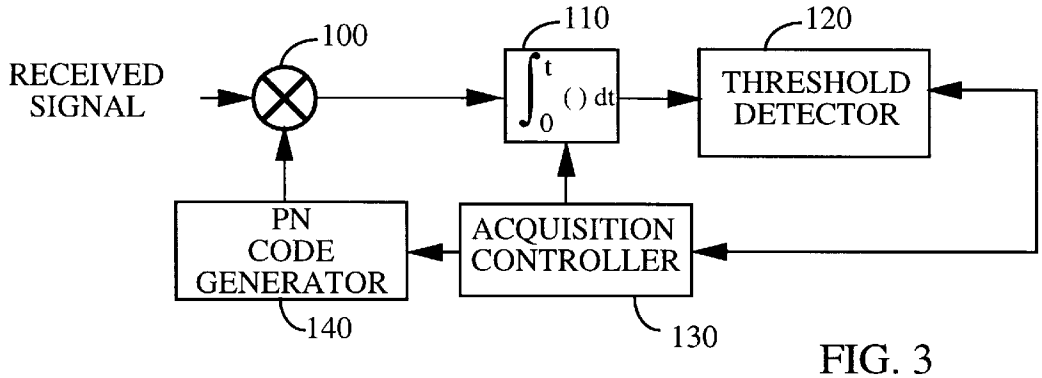
RECEIVED SIGNAL
100
110
120
THRESHOLD DETECTOR
PN CODE GENERATOR
ACQUISITION CONTROLLER
140
130

FIG. 3

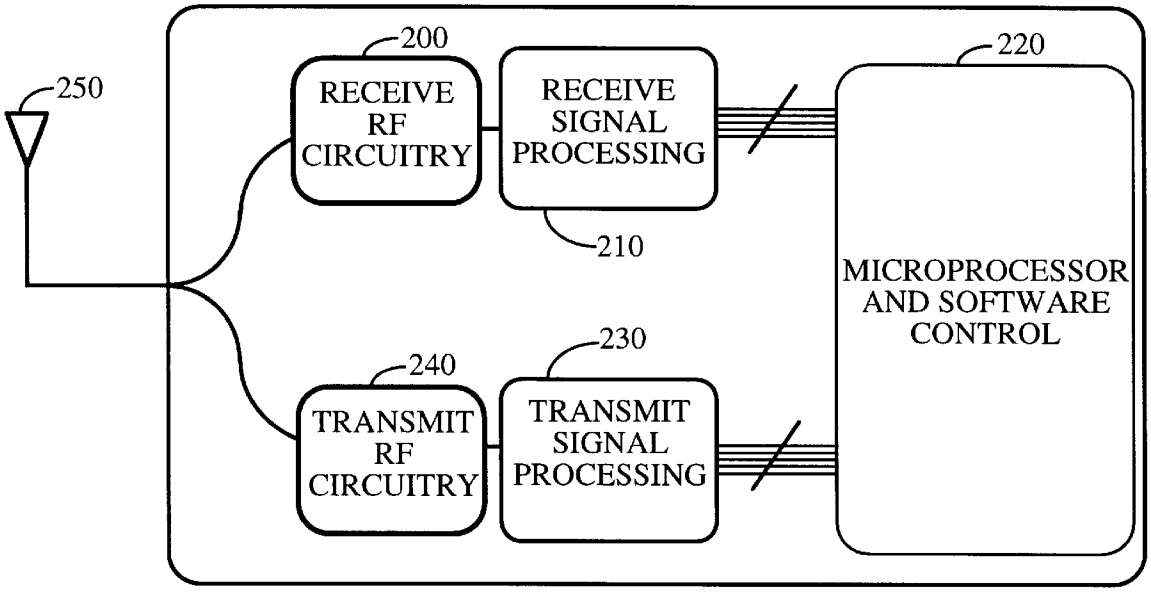
250
200
RECEIVE RF CIRCUITRY
RECEIVE SIGNAL PROCESSING
210
220
MICROPROCESSOR AND SOFTWARE CONTROL
240
TRANSMIT RF CIRCUITRY
230
TRANSMIT SIGNAL PROCESSING

FIG. 4A

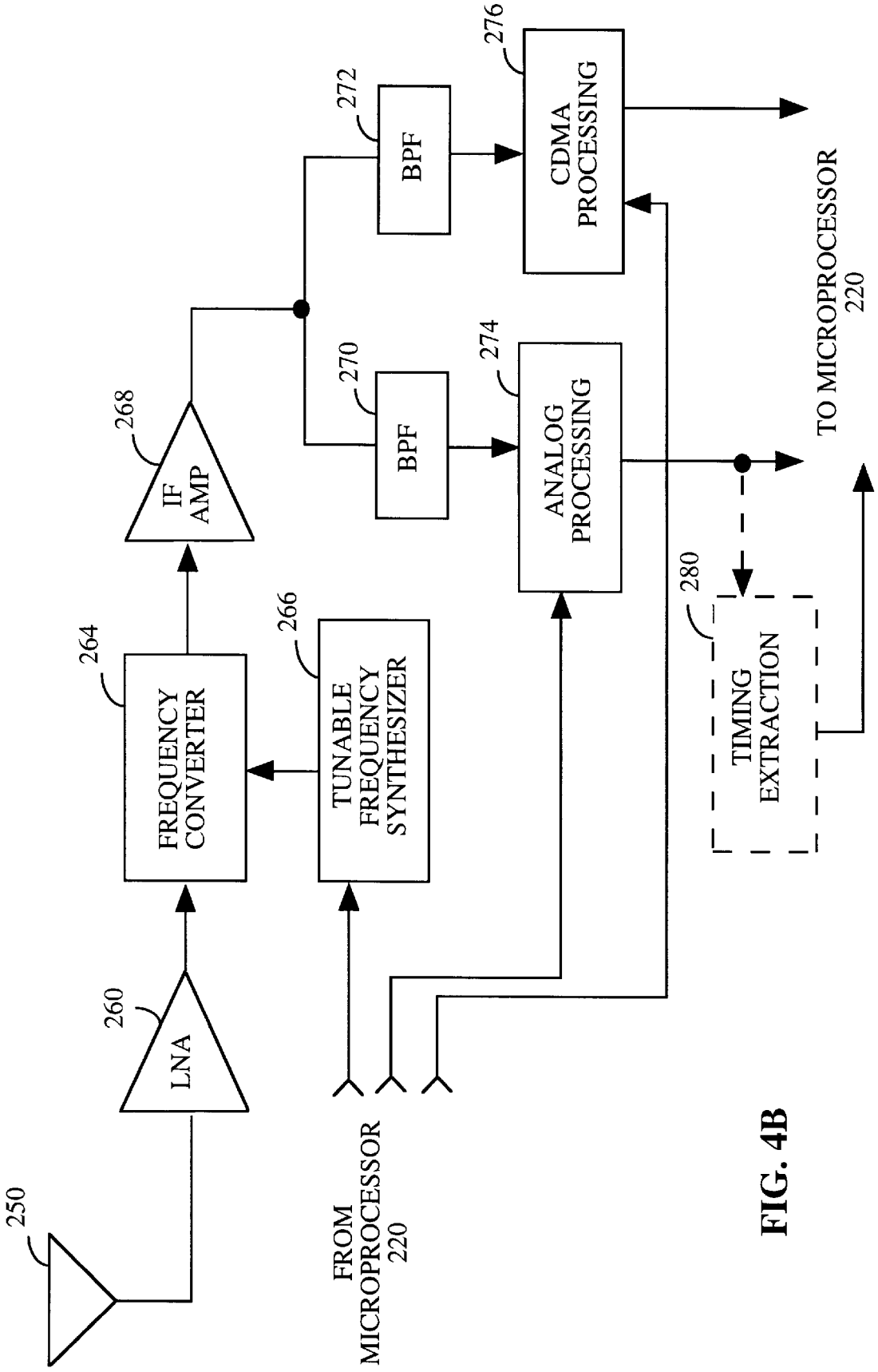
250
LNA
260
FREQUENCY CONVERTER
264
IF AMP
268
TUNABLE FREQUENCY SYNTHESIZER
266
FROM MICROPROCESSOR 220
BPF
270
BPF
272
ANALOG PROCESSING
274
CDMA PROCESSING
276
TIMING EXTRACTION
280
TO MICROPROCESSOR 220

FIG. 4B

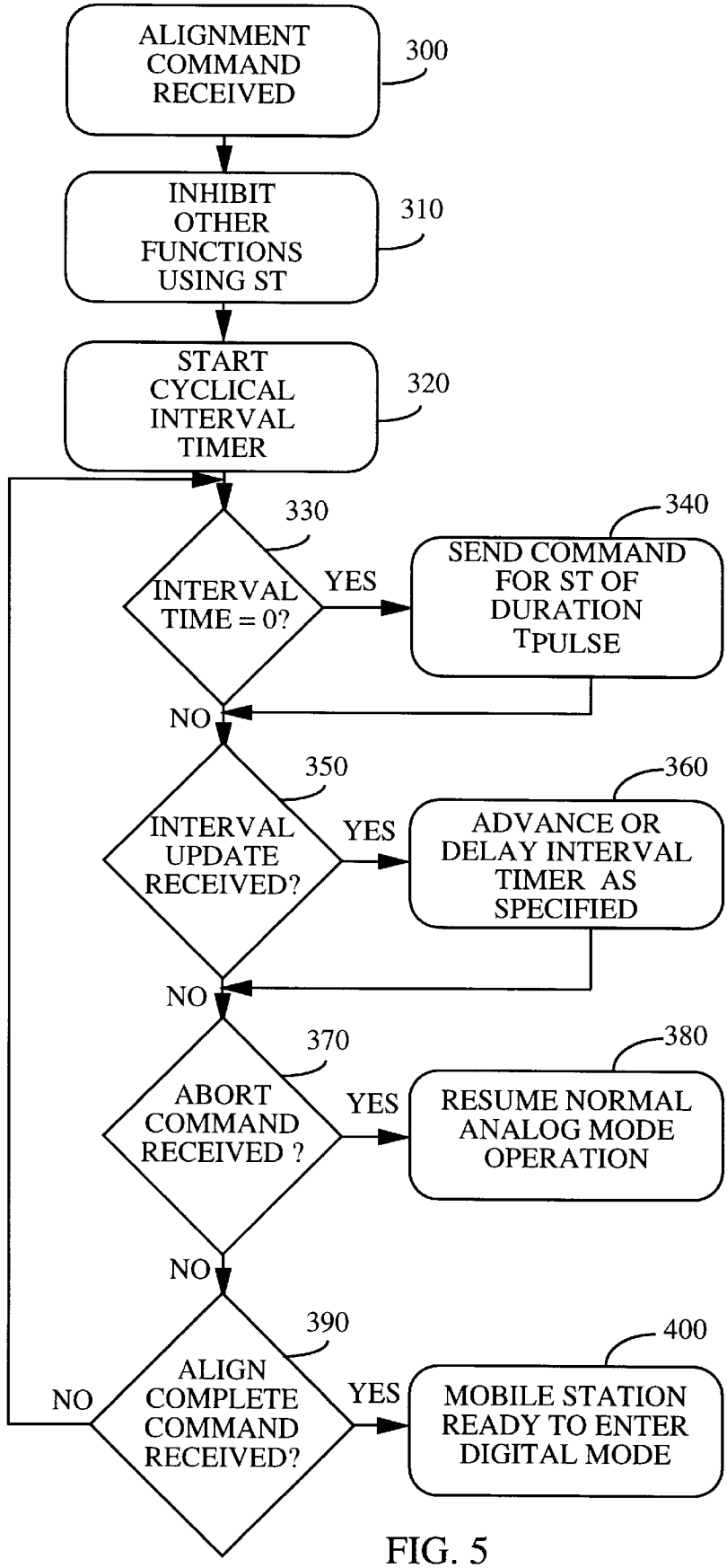
ALIGNMENT COMMAND RECEIVED
300
INHIBIT OTHER FUNCTIONS USING ST
310
START CYCLICAL INTERVAL TIMER
320
330
INTERVAL TIME = 0?
YES
340
SEND COMMAND FOR ST OF DURATION TPULSE
NO
350
INTERVAL UPDATE RECEIVED?
YES
360
ADVANCE OR DELAY INTERVAL TIMER AS SPECIFIED
NO
370
ABORT COMMAND RECEIVED ?
YES
380
RESUME NORMAL ANALOG MODE OPERATION
NO
390
ALIGN COMPLETE COMMAND RECEIVED?
NO
YES
400
MOBILE STATION READY TO ENTER DIGITAL MODE

FIG. 5

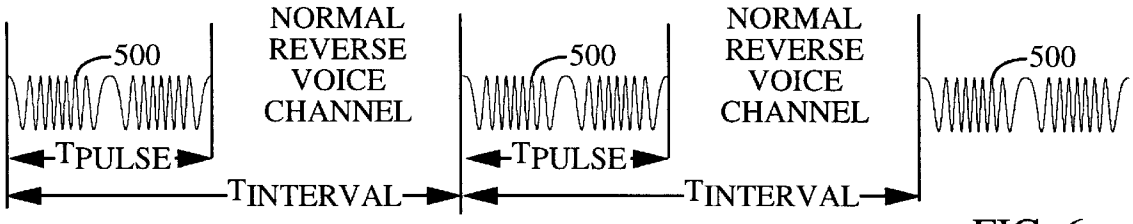

FIG. 6

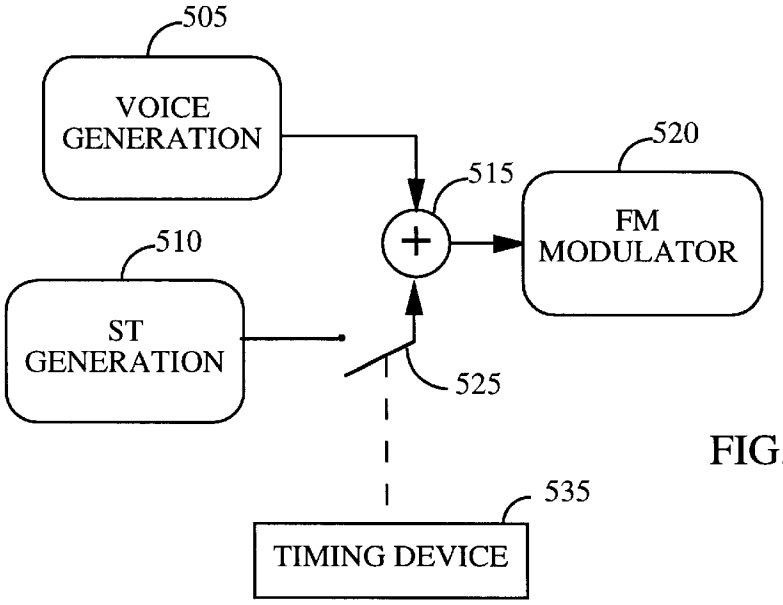

FIG. 7

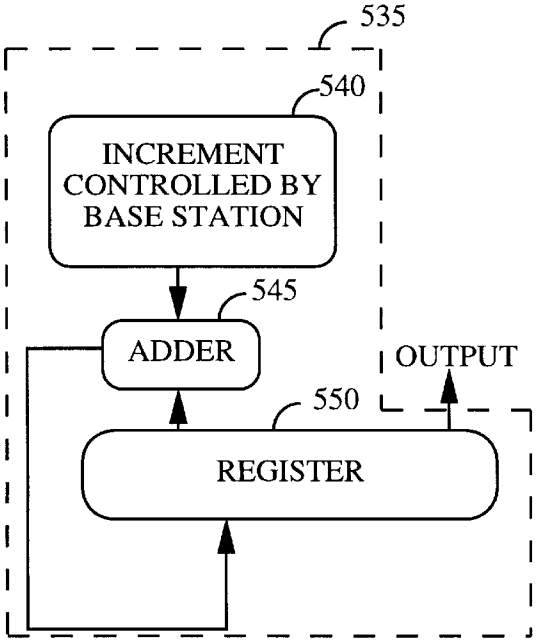

FIG. 8

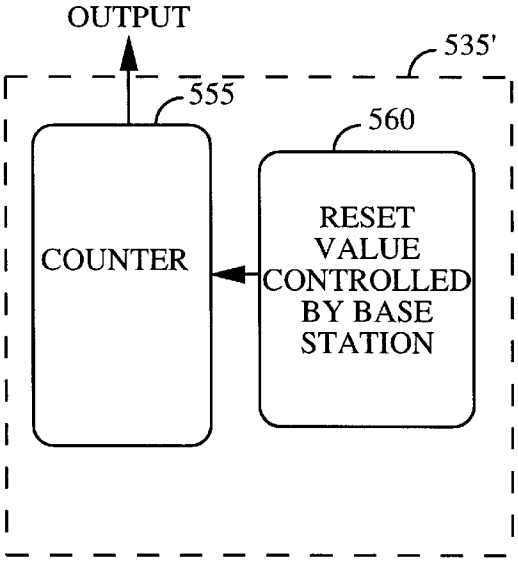

FIG. 9

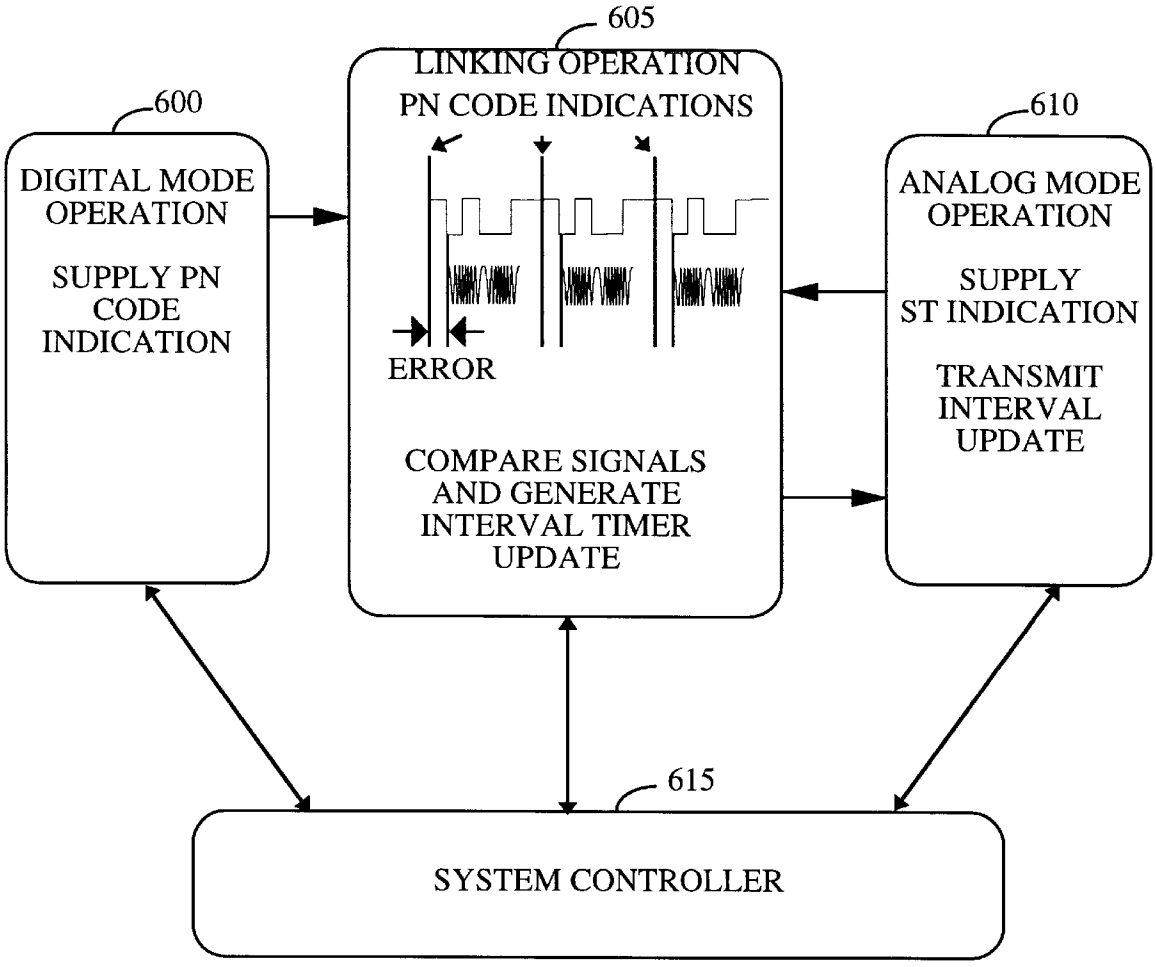
605
LINKING OPERATION
PN CODE INDICATIONS
600
DIGITAL MODE OPERATION
SUPPLY PN CODE INDICATION
610
ANALOG MODE OPERATION
SUPPLY ST INDICATION
TRANSMIT INTERVAL UPDATE
ERROR
COMPARE SIGNALS AND GENERATE INTERVAL TIMER UPDATE
615
SYSTEM CONTROLLER

FIG. 10

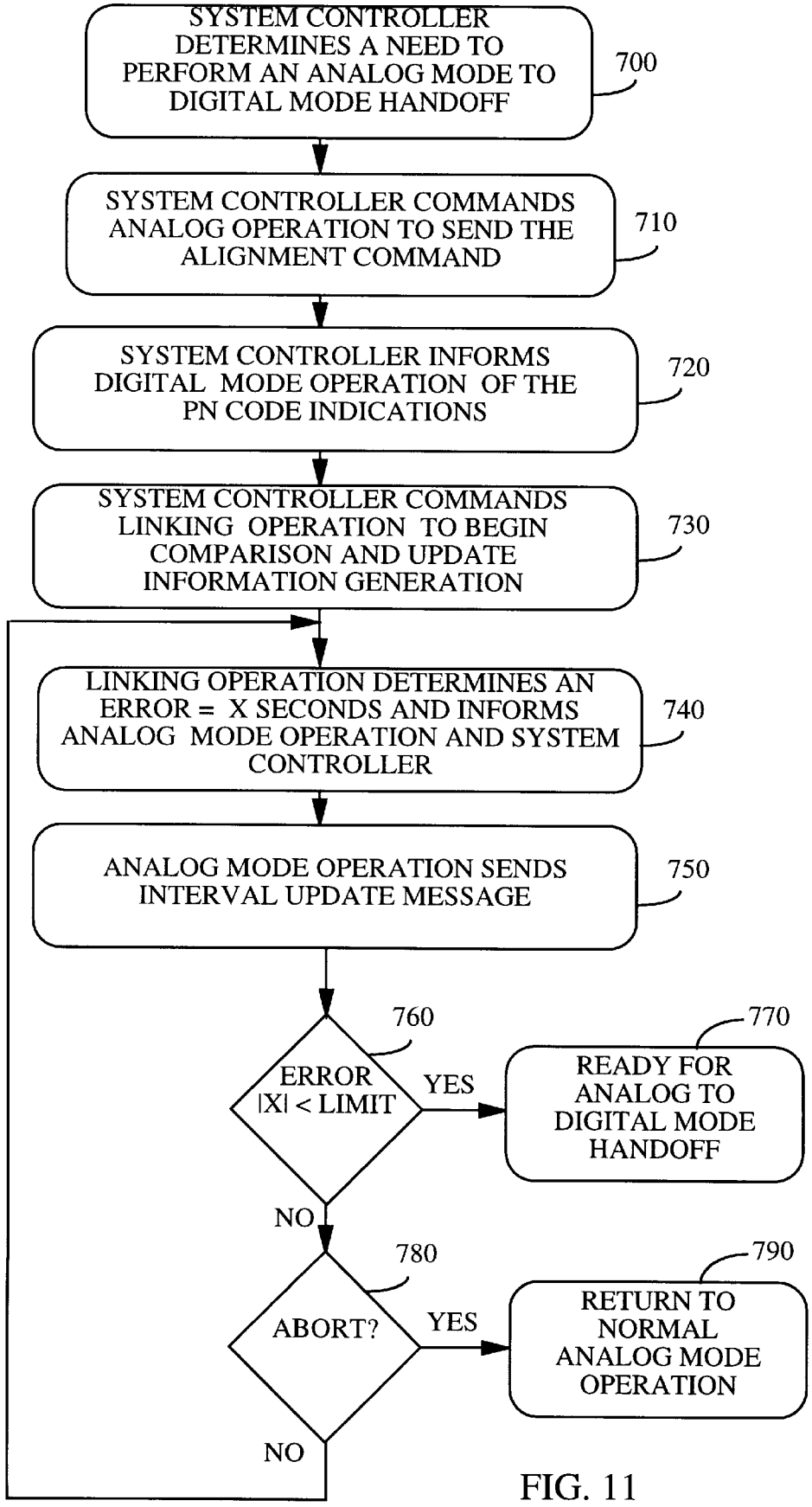
SYSTEM CONTROLLER DETERMINES A NEED TO PERFORM AN ANALOG MODE TO DIGITAL MODE HANDOFF
700
SYSTEM CONTROLLER COMMANDS ANALOG OPERATION TO SEND THE ALIGNMENT COMMAND
710
SYSTEM CONTROLLER INFORMS DIGITAL MODE OPERATION OF THE PN CODE INDICATIONS
720
SYSTEM CONTROLLER COMMANDS LINKING OPERATION TO BEGIN COMPARISON AND UPDATE INFORMATION GENERATION
730
LINKING OPERATION DETERMINES AN ERROR = X SECONDS AND INFORMS ANALOG MODE OPERATION AND SYSTEM CONTROLLER
740
ANALOG MODE OPERATION SENDS INTERVAL UPDATE MESSAGE
750
760
ERROR |X| < LIMIT
YES
770
READY FOR ANALOG TO DIGITAL MODE HANDOFF
NO
780
ABORT?
YES
790
RETURN TO NORMAL ANALOG MODE OPERATION
NO

FIG. 11

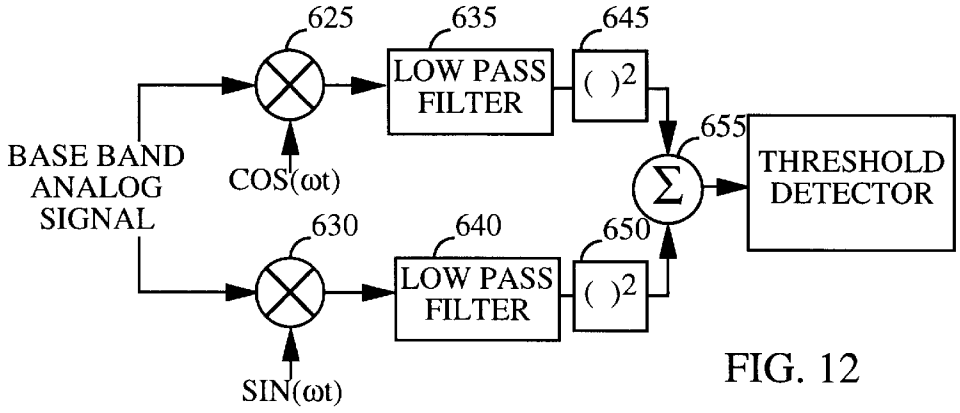

FIG. 12

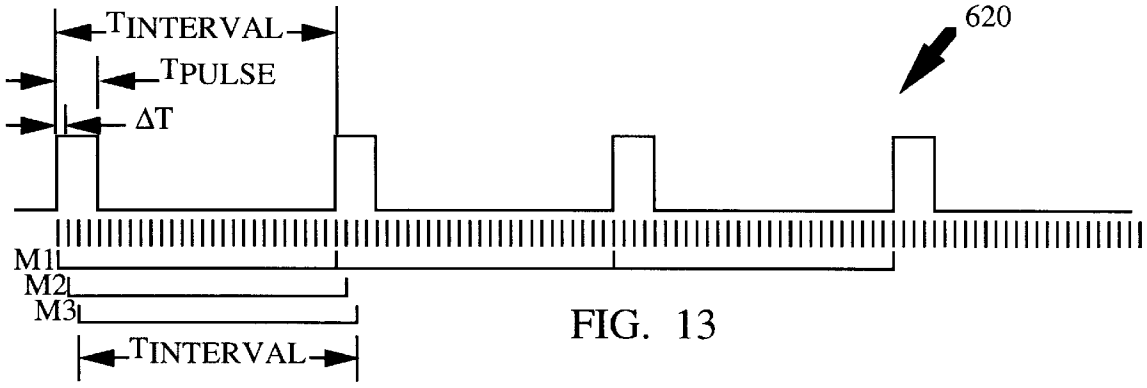

FIG. 13

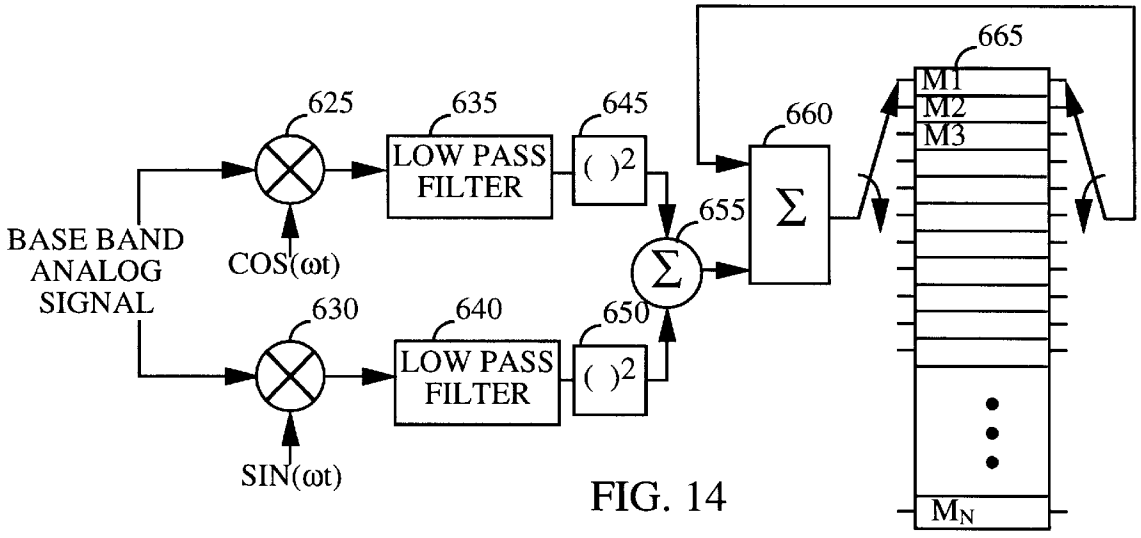

FIG. 14

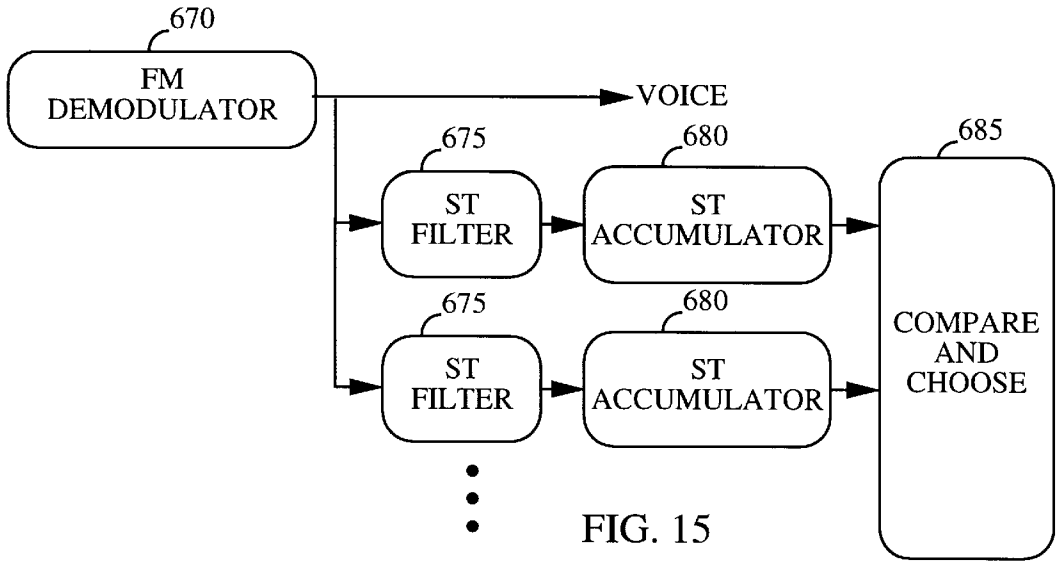

FIG. 15

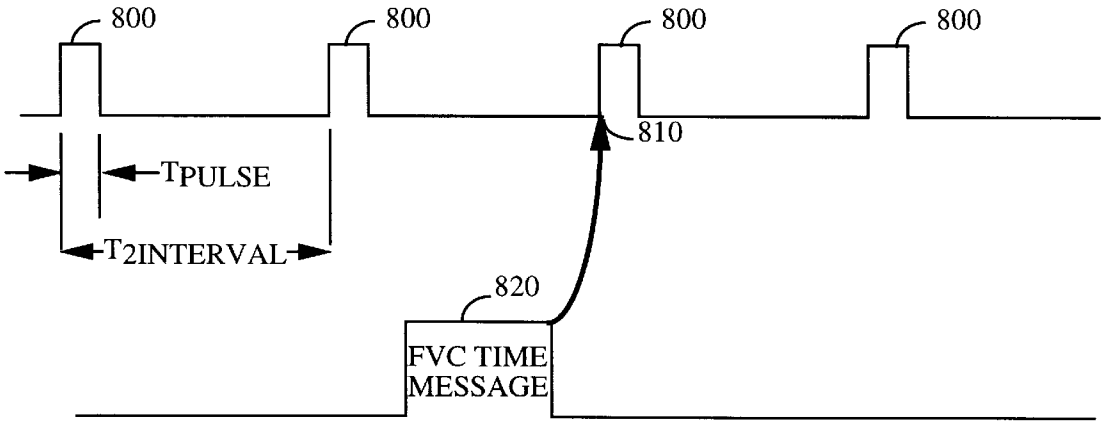

FIG. 16

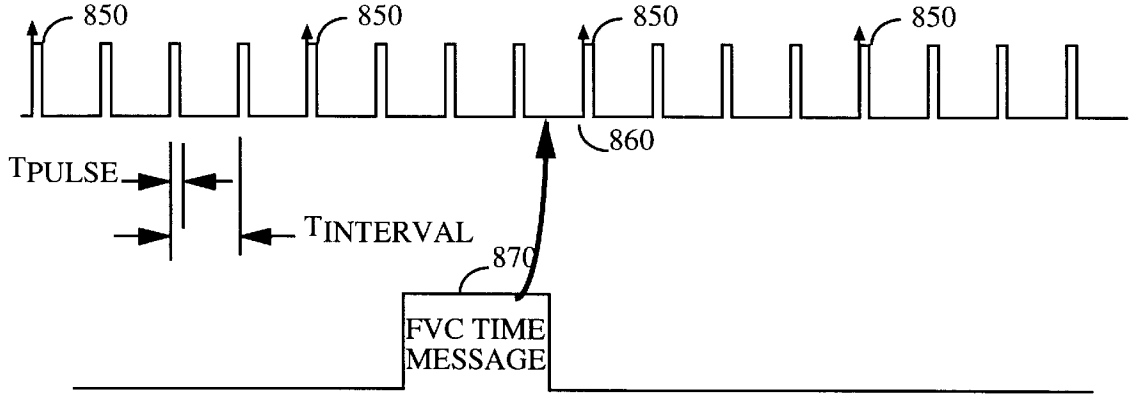

FIG. 17

METHOD FOR MULTI-MODE HANDOFF USING PRELIMINARY TIME ALIGNMENT OF A MOBILE STATION OPERATING IN ANALOG MODE

This application is a continuation-in-part of application Ser. No. 08/383,555, filed Jan. 31, 1995, now U.S. Pat. No. 5,509,035, which is continuation of application Ser. No. 08/047,719, filed Apr. 14, 1993, now abandoned.

BACKGROUND OF THE INVENTION

I. Field of the Invention

The present invention relates to communications. More particularly, the present invention relates to a novel and improved method for executing multi-mode handoffs in a cellular system through preliminary time alignment of a mobile station.

II. Description of the Related Art

In the field of cellular communications, systems employing both analog and digital systems have been developed. Systems operating in the analog mode are typically of a frequency modulation type, an example of which is the system known as the Advanced Mobile Phone Service (AMPS), as prescribed in Electronic Industry Association standard EIA/TIA-553 "Mobile Station-Land Station Compatibility Specification". Systems operating in the digital mode may be of different types of digital modulation such as time division multiple access system (TDMA) or a spread spectrum multiple access type, employing a frequency hopping (FH) or direct sequence spread spectrum modulation mode. Digital multiple access systems employing direct sequence spreading are commonly referred to as Code Division Multiple Access (CDMA) systems. An example of a TDMA system is one that is described in the Telecommunications Industry Association/Electronic Industry Association Interim Standard TIA/EIA/IS-54 "Cellular System Dual-Mode Mobile Station-Base Station Compatibility Standard", and the revisions thereto (TIA/EIA/IS-54A and TIA/EIA/IS-54B). Another example of a TDMA system is the system known as the Global System for Mobile Communication (GSM). An example of a CDMA system is one that is set forth in the Telecommunications Industry Association/Electronic Industry Association Interim Standard TIA/EIA/IS-95 "Mobile Station-Base Station Compatibility Standard for Dual-Mode Wideband Spread Spectrum Cellular System", and the revisions thereto (TIA/EIA/IS-95A). Although these standards are typically defined for frequency spectrum specific to cellular communications, the analog and digital techniques are also applicable to other frequencies such as those defined for personal communication services (PCS).

Dual mode cellular communication mobile stations or subscriber units are capable of operating in both a standard analog mode and a digital mode. Within such a system, a need may arise to handoff from analog mode to digital mode during an active call or vice versa. Analog to digital system handoffs are not restricted to those within the cellular frequency band, but may also occur between an analog cellular system and a digital PCS system.

Regardless of the systems involved, a prolonged discontinuity in service during the handoff from analog mode to digital mode is unacceptable to the users of the system. A quality system must therefore incorporate a dual mode handoff method that causes a minimum interruption of service. However, in standard analog mode time alignment of a mobile station to a predetermined system time is not

required, and no analogous function is currently available. In digital mode, time alignment is critical and required for communication between the mobile station and the base station. This dissimilarity between the two modes can cause delays in handoff from analog mode to digital mode.

Within the current analog cellular phone system, a handoff of a mobile station call can be performed between base stations during an active call. One handoff criteria which initiates a handoff is the strength of the mobile station signal arriving at the base station. Initiation of a handoff by the base station begins when the base station with which a mobile station is communicating receives from the mobile station a message indicative of insufficient mobile station received signal strength. The base station sends a request to a system controller or mobile switching center (MSC) for a handoff of the call. The system controller polls the neighboring base stations to ascertain an estimate of the signal strength of the mobile station at neighboring base stations, and, from this information, determines a candidate base station. The original base station informs the mobile station of the frequency and various other parameters of the candidate base station, and directs the mobile station to handoff. The call is then transferred from the original base station to the candidate base station, which becomes the new active base station. It should be noted that the procedure above might vary depending on the manufacturer of the equipment performing the functions.

The handoff of a mobile station call in a digital system, such as a CDMA system or Time Division Multiple Access (TDMA), is initiated either by a base station or by a mobile station. In a typical CDMA digital system, neighboring base stations use the same frequency for transmission, thus allowing a mobile station to monitor signal strengths of neighboring base stations during an active call. A mobile station sends a message when one of the neighboring base stations' signal arrives at the mobile station at a level exceeding some predetermined threshold, thereby initiating a handoff procedure. The system controller commands the neighboring base station to establish communication with the mobile station if resources are available at the neighboring base station. The system controller relays a message to the mobile station, through the active base station, directing the mobile station to establish communication with the neighboring base station. The mobile station establishes communication with the neighboring base station without breaking the call with the active base station. The mobile station can maintain the call with two base stations until one of the base stations' signal strength falls below a predetermined level. Further information on handoffs within a digital CDMA system is disclosed in a U.S. Pat No. 5,101,501 entitled "METHOD AND SYSTEM FOR PROVIDING A SOFT HANDOFF IN COMMUNICATIONS IN A CDMA CELLULAR MOBILE TELEPHONE SYSTEM", the disclosure of which is incorporated by reference herein, which is assigned to the Assignee of the present invention. Also, further information on handoffs within a digital CDMA system is disclosed in U.S. Pat. No. 5,267,261, entitled "MOBILE STATION ASSISTED SOFT HANDOFF IN A CDMA CELLULAR COMMUNICATIONS SYSTEM", the disclosure of which is also incorporated by reference herein, and also assigned to the Assignee of the present invention.

A handoff from digital mode to analog mode is typically easier than the handoff from analog mode to digital mode. A digital mode to analog mode handoff could be initiated by either a mobile station or a base station on the basis of the mobile station having exited the coverage area of the digital system. In digital mode the base station can transmit the

necessary information about the analog system including, for example, the new frequency assignment, supervisory audio tones (SAT), and voice mobile attenuation code (VMAC) information as dictated by the system controller. Similar to handoff within an analog system, the call can then be transferred from the base station operative in digital mode to an analog mode base station.

As a digital system is initially deployed covering only certain localities within an operating system, a need may arise to perform a handoff from analog mode to digital mode. For example, a digital system may be deployed in a metropolitan city but not deployed in the surrounding suburban areas. A user may initiate an analog call as he leaves the suburban area driving towards the city. As the metropolitan area is approached, the heavily laden analog system may not have the capacity to accept the transfer of the call, hence necessitating that the call be terminated prior to completion (i.e., "dropped"). If the dual mode system were capable of transferring the call from the analog system to the higher capacity digital system, it would be unnecessary to drop the call.

The need for handoff from analog mode to digital mode may also arise within the context of private branch exchange (PBX). A digital PBX system integrated into an office building might be surrounded by an analog system outside of the building. A handoff from the outside analog system to the inside digital system would take place as the user entered the building while maintaining an active call. If the system could not perform such a handoff, the call could be dropped due to the inability of the analog signals to penetrate the walls of the building and maintain signal levels capable of supporting continued communication.

A complication to the handoff from analog mode to digital mode is that digital mode requires a finite time duration for the mobile station to synchronize (acquire time alignment). The acquisition time typically varies as a function of: the system architecture of the digital system to be deployed, the signal to noise level at the mobile station at the time of attempted acquisition, the accuracy of the initial guess, and as a function of the acquisition algorithm used. In a typical CDMA system, the average system acquisition time is several seconds. The acquisition time in TDMA systems is generally less than in CDMA systems. However, in either instance the discontinuity of service resulting from the requisite acquisition time may be unacceptable in a voice system.

SUMMARY OF THE INVENTION

The present invention seeks to overcome the above mentioned difficulties encountered in the handoff in communications from different modes of modulation. In particular the present invention provides a novel and improved method for the handoff of a mobile communication device or subscriber unit from an analog to a digital modulation mode. A feature of the present invention is that it provides for a minimization in acquisition time by performing a preliminary time alignment of the mobile station prior to entering digital mode.

The present invention is a novel and improved method for handoff of a connection on an analog cellular communication channel to a channel of another mode. In accordance with the invention, mobile station timing is synchronized to the other mode prior to transfer of the connection. The performed alignment can be used to reduce the discontinuity in service caused by a handoff from analog mode to, for example, digital mode in a cellular communication system. The method contemplates aligning the mobile station timing in analog mode as a means of expediting the transition to operation in digital mode.

In order to reduce the acquisition time for a mobile station commencing operation in a digital mode, an estimate of master system time is transferred to the mobile station in analog mode before entering digital mode. Since concurrent analog mode and digital mode operation would unreasonably and adversely impact both RF architecture and mobile station control structures, the alignment is performed within the analog mode operation circuitry of the mobile station. The alignment operates within the protocol of the present analog AMPS system. As such, only minimal software changes in the mobile station, where cost is critical, and transfers to the base station the new hardware equipment and control software.

In a preferred implementation, time alignment is initiated upon the base station sending to the mobile station a command to continually transmit a periodic signaling tone. In a preferred implementation, the period of the mobile station transmission is related to the period of the pseudorandom code sequence of the digital system. The base station compares the edges of the signaling tone from the mobile station to the pseudorandom code sequence edges of the master system clock, and determines an error signal. The base station notifies the mobile station to delay or advance in time the transmitted signaling tones based on the error signal. This procedure may continue until the calculated error falls below a predetermined level. Having attained time alignment, the base station is able to transfer to the mobile station absolute time of day information with increased accuracy. The mobile station is then commanded into digital mode, where transition time is reduced to a level tolerable by the end user due to the performed alignment.

Although the methods specifically described pertain to the handoff of a call from an analog system to a digital system, the principle described herein can be implemented within a variety of operating systems. The benefits of time alignment and the transfer of absolute time specific information have application within an array of systems.

It is therefore an object of the present invention to provide, in a cellular communication system, a method of handoff of mobile station communication from analog to digital mode in which the mobile station is preliminarily aligned to digital mode timing during analog mode operation.

It is another object of the present invention to provide the alignment function with minimal changes to the mobile station.

It is yet another object of the present invention to provide a handoff method in which a preliminary time alignment procedure leads to reduced acquisition time of a mobile station upon entering digital mode.

BRIEF DESCRIPTION OF THE DRAWINGS

The features, objects, and advantages of the present invention will become more apparent from the detailed description set forth below when taken in conjunction with the drawings in which like reference characters identify correspondingly throughout and wherein:

FIG. **1A** illustratively represents four cells of an exemplary cellular communication system;

FIG. **1B** is a diagram illustrating the need for time alignment in demodulation of mobile stations within the system of FIG. **1A**;

FIGS. **2A–2G** illustrate, in a series of charts, the mathematical results corresponding to the demodulation of mobile stations of diagram of FIG. **1B**;

FIG. **3** is a block diagram of an exemplary timing acquisition structure;

FIG. **4**A is a partial block diagram of a mobile station having a dual-mode receive chain;

FIG. **4**B shows a more detailed block diagram representation of the dual-mode receive chain within the mobile station of FIG. **4**A.

FIG. **5** is a diagram illustrating the various events in the mobile station during analog mode time alignment;

FIG. **6** illustrates the transmissions from the mobile station during time alignment in analog mode;

FIG. **7** is a block diagram illustrating a mobile station signaling tone (ST) control configuration;

FIG. **8** is a block diagram illustrating a timing device embodiment using a register;

FIG. **9** is a block diagram illustrating a timing device embodiment using a counter;

FIG. **10** is a block diagram of the base station operations to support analog mode time alignment;

FIG. **11** is a diagram illustrating the various events in the base station during analog mode time alignment;

FIG. **12** is a block diagram illustrating a implementation of the ST pulse edge detection;

FIG. **13** illustrates timing for a configuration for detecting leading edge of the arriving ST at the base station;

FIG. **14** is a block diagram illustrating a configuration to implement indication detection in conjunction with FIG. **13**;

FIG. **15** is an alternative block diagram illustrating a configuration to implement indication detection;

FIG. **16** is timing diagram illustrating transfer of absolute time of day information; and

FIG. **17** is timing diagram illustrating transfer of absolute time of day information in alternative embodiment from FIG. **16**.

DETAILED DESCRIPTION OF THE PREFERRED EMBODIMENTS

I. Introduction

In a dual mode cellular system wherein analog and digital system deployment is contiguous or coexistent, a method of transferring a connection initiated within the analog system to the digital system is needed to provide continuous quality service to the end user. It is therefore required that the discontinuity of service attributed to the acquisition time upon entering digital mode be minimized. The most obvious method of performing this function would be to design mobile stations capable of simultaneous analog and digital operation. However, implementing a mobile station with this capability would prove to be both difficult and costly. It would require duplication of resources within the mobile station which could otherwise could be shared during operation in each mode. This dual-mode mobile station implementation would also tend to result in a non-optimal RF architecture and would require a complicated software control algorithm.

A more practical solution is to perform a preliminary time alignment in analog mode before performing a handoff between analog mode and digital mode. To keep equipment cost down, this alignment is best performed using the present capabilities of the analog system within the mobile station.

Turning now to FIG. **1**A, there is illustratively represented four cells C**1**–C**4** of a cellular communication system. In general, a handoff method in accordance with the invention is implemented in a cellular communication system comprising many more cells than four. However, for the present purpose of explanation of the invention a system of four cells will suffice.

For each cell C**1** to C**4** there is a base station B**1** to B**4** with the same number as the cell. FIG. **1**A illustrates base stations within the vicinity of the center of each cell, and therefore equipped with omnidirectional antennas. It is, however, well known to those skilled in the art that base stations may be located in the vicinity of cell borders and equipped with directional antennas.

As is indicated by FIG. **1**A, a set of four mobile stations M**1**–M**4** are dispersed throughout the cells C**1**–C**4**. In general, a method in accordance with the invention is implemented in a cellular communication system which includes many more mobile stations than four. However, for present purposes of explanation of the invention a system of four mobile stations is sufficient.

Also illustrated in FIG. **1**A is a system controller in the form of a mobile switching center (MSC). The mobile switching center of FIG. **1**A may be connected to all ten illustrated base stations by cables. The mobile switching center is also connected by cables to the public switched telephone network (PSTN) or to a network of like type. In addition to the MSC illustrated in FIG. **1**A, there may be another MSC operatively connected to base stations other than those shown in FIG. **1**A. Instead of cables other means may be employed to facilitate base station to mobile switching center communication, e.g., fixed radio links.

In the embodiment of FIG. **1**A each of the mobile and base stations are capable of communicating on both analog and digital communication channels. It is understood, however, that in alternate embodiments certain ones of the base stations could be configured exclusively for communication over either analog or digital communication channels. For example, a digital system could be deployed within a metropolitan area encompassed by cell C**4**, and analog systems implemented within the surrounding suburban areas included within cells C**1**–C**3**. The system of FIG. **1**A is designed to accommodate analog information (e.g., speech), digitized analog information (e.g., digitized speech), and pure digital information (e.g., data).

In what follows the term "connection" identifies a communication channel between a mobile station and another mobile station in the same system or another system, or a fixed telephone or terminal in a fixed network connected to the cellular communication system. Hence, a connection may be a call where two persons talk to one another, but also may consist of a data communication channel over which digital data is exchanged. As is described hereinafter, the present invention is directed to an improved system and method for transferring a connection from an analog channel to a digital channel.

When an analog communication channel is used to establish a connection, the information on the connection is transmitted to the mobile station using analog modulated communication signals. In contrast, digital communication channels are normally used for connections where digital or digitized information is exchanged, e.g., data or digitized speech. The channels used for digital communication may be divided into time slots, and the time slots grouped into frames. In a digital time-division multiple access (TDMA) system, each time slots are assigned to a different mobile stations whereby the multiple digital channels (i.e., time slots) share a common radio communication channel in time division multiplex. Alternatively, in code division multiple access (CDMA) communication systems, the frequency spectrum available for digital communication may be reused

multiple times, thus permitting an increase in system user capacity. The use of CDMA techniques results in a much higher spectral efficiency than can be achieved using other multiple access techniques.

Referring again to FIG. **1**A, the need for an analog to digital channel handoff could arise in the case in which base station B**1** is configured for analog communication and base station B**2** for digital communication. In this instance it would be desired to transfer the analog connection between mobile station M**1** and base station B**1** to a digital communication channel around the time mobile station M**1** enters cell C**2**. Various other instances may exist in which an analog to digital channel handoff is desired. For example, when a mobile station is within the coverage area of a dual-mode base station capable of communication on both analog and digital channels, the analog to digital channel handoff may be desired to improve utilization of system resources, to improve signal quality, or to make the analog channel available to another system user.

In conventional cellular systems including exclusively analog base stations, the handoff from one cell to another is initiated when the receiver in the cell base station handling the connection notices that the received signal strength from the mobile station has fallen below a predetermined threshold value. A low signal strength indication implies that the mobile station must be near the cell border. When the signal level falls below the predetermined threshold value, the base station asks the system controller to determine whether a neighboring base station receives the mobile telephone signal with better signal strength than the current base station.

The system controller in response to the current base station inquiry sends messages to the neighboring base stations with a handoff request. The base stations neighboring the current base station employ special scanning receivers which look for the signal from the mobile telephone on the specified channel. Should one of the neighboring base stations report an adequate signal level to the system controller, then a handoff will be attempted.

Handoff is then initiated when an idle channel from the channel set used in the new base station is selected. A control message is sent to the mobile station commanding it to switch from the current channel to the new channel. In addition to information relating to characteristics of the new channel to which the connection is to be transferred, the control message may convey other information associated with the communication channel (e.g., the new SAT tone frequency). At the same time the control message is sent, the system controller switches the connection from the first base station to the second base station.

The handoff procedure becomes more complicated, however, when the current channel comprises an analog channel and the new channel a digital channel. Specifically, it is additionally required to time align the mobile station to a predetermined system time before communication over the new channel may be initiated. As noted in the Background of the Invention, the required time alignment creates the potential for delays in handoff from analog to digital mode. In accordance with the invention, mobile station timing is aligned in analog mode prior to handoff to digital mode. A preferred technique of preliminary time alignment performed during the analog to digital mode handoff process of the invention is summarized immediately below, and is then described further within the context of a CDMA communication system.

II. Overview of Preliminary Time Alignment

It is known that within the current analog AMPS system, there is a mechanism to communicate digital information bits to the mobile station while an active call is in progress. The connection from the base station to the mobile station during an active call is called the forward voice channel (FVC). The analog voice signals on the FVC may be interrupted by the forward voice channel data stream. A FVC data stream is used to communicate handoff messages and other messages to the mobile station. The FVC data stream format is comprised of a word of information for the mobile station and overhead bits. In the FVC data stream, each word is repeated eleven times. Each transmission of the word is proceeded by overhead bits including a dotting pattern and a word sync pattern. The dotting pattern is used for acquisition of bit synchronization and the word sync pattern is used for word synchronization. Note that synchronization is attained on a message by message basis and that the synchronization required is not analogous to the inventive time alignment procedure for digital mode operation described herein.

The connection from the mobile station to the base station during an active call is called the reverse voice channel (RVC). Signaling messages can be sent from the mobile station to the base station over this channel. In addition, the mobile station can send signaling tones (ST) over the RVC to acknowledge commands or to activate certain special functions. For example an ST is used by the mobile station to accept a "call waiting" call. An ST is a 10 kHz tone with a peak deviation of 8 kHz.

In a preferred embodiment of the present invention, both the FVC data stream and the ST are used to attain preliminary time alignment of the mobile station in analog mode, as well as to transfer information required to set up the mobile station for digital mode operation. When an analog mode to digital mode handoff is required, the base station, using the present FVC data stream format, sends a word to the mobile station to begin time alignment. Also transmitted over the FVC data stream is digital system configuration and parameter information required by the mobile station to set up the connection over the new digital communication channel. In an exemplary CDMA system, the requisite set up information corresponds at least in part to that specified within a Handoff Direction Message as defined by the IS-95 standard of the Telecommunications Industry Association (EIA/TIA/IS-95). In a preferred embodiment, communication continues over the analog channel after receipt of the requisite digital channel set up information until a command is received over the analog channel specifying an exact handoff time. After handoff to the digital channel occurs, additional digital system configuration and parameter information may be transferred to the mobile station over the digital channel.

The utilization of the FVC data stream and the ST in this manner advantageously allows the time alignment operation to be performed within the protocol of the present analog system (AMPS). As such only minimal software changes are required in the mobile station, where cost is critical, while the majority of the new functions, hardware equipment, and software are transferred to the base station.

Nonetheless, in alternate embodiments it may be desired that each mobile station be configured to be capable of time aligning to a timing waveform received from the base station during analog operation. For example, a pulsed waveform transmitted by the base station during analog mode operation could be phase-adjusted so as to impart the required digital mode system timing information to the mobile station. At the mobile station, the receiver could be configured to self-align digital mode timing to the phase-adjusted waveform received during analog mode operation. One

implementation of a mobile station receiver designed to extract timing information from such a phase-adjusted waveform is described in further detail below with reference to FIG. 4B.

III. Preliminary Time Alignment within a CDMA System

Time alignment in digital systems is required for the transfer of data between a mobile station and a base station. For example, in a CDMA system, data is encoded by using a pseudorandom sequence. Only if the mobile station receiver is time aligned with the arriving PN sequence is the data recovered at the mobile station. In addition to being time aligned, if the mobile station is to re-establish a connection on a CDMA channel initially made on an analog channel it must be supplied with at least the following information specified within the above-referenced Handoff Direction Message:

a) the CDMA channel frequency,

b) an assigned CDMA code channel,

c) the PN offset of the pilot signal transmitted by the new base station with which the digital connection is to be established, and

d) the current "state" of the PN long code.

Once the digital connection has been established, other pertinent system information may be transmitted over the CDMA communication channel to the mobile station from the new base station. Such information could include, for example, a Neighbor list of base stations within the vicinity of the mobile station, as well as other digital system information.

FIG. 1B is a diagram of a simple exemplary system illustrating the need for time alignment of mobile stations (e.g., mobile stations M1–M4 of FIG. 1A) within cellular systems adapted for spread spectrum CDMA communication. The system of FIG. 1B uses a length 7 pseudorandom (PN) code sequence. The duration of each of the 7 chips is called a chip time, T_C. In this example, base station **10** multiplies a data bit and a complete PN code cycle producing a spread signal for transmission; therefore, this multiplication function is referred to as spreading. In FIG. 1B, base station **10** transmits the spread data bit signal to four ideal mobile stations **20**, **30**, **40** and **50**, which may correspond to the mobile stations M1–M4 of FIG. 1A. Each mobile station **20**, **30**, **40** and **50** multiplies the incoming signal with the same PN code sequence used by base station **10** and then integrates the product over one complete PN code cycle, however each of mobile station **20**, **30**, **40** and **50** has a different PN code offset.

FIGS. 2A–2G illustrate mathematically the result of the multiplication and integration within the mobile stations of FIG. 1B. For example, mobile station **20** is time aligned with base station **10** and the result of the operations within base station **10** are illustrated in FIG. 2A. The time aligned sequence, code phase **1**, is multiplied chip by chip with spread data bit signal, received sequence, to produce the product shown. The result of the integration is the sum of the entries in the product line which in FIG. 2A is "SUM=7." In this case the data bit was a "1" and mobile station **20** successfully recovers the original data bit signal. If the data bit had been a "−1," each entry in the receive data row would be complemented and the sum of the product line would have been "−7."

FIG. 2B represents the operations within mobile station **30**. Code phase **2** is exactly one chip time delayed from code phase **1** and the result of the multiplication with the received sequence is a series of 1's and −1's. The sum of the product line of FIG. 2B is −1 and the data bit signal is not properly decoded by mobile station **30**.

Likewise FIG. 2C represents the operation within mobile station **40** and FIG. 2D represents mobile station **50**. Mobile station **40** has a code phase **3** which is delayed by two chips from the proper code phase **1**; and mobile station **50** has code phase **4** which is delayed by three chips from code phase **1**. Therefore neither mobile station **40** or mobile station **50** properly decodes the data bit signal. FIGS. 2E–2G represent the three remaining possible code phase offsets to explain by example that these offsets also do not properly decode the original data bit signal.

Note that, in FIG. 1B, a second base station could be added having an alternate PN code phase offset to the phase of base station **10**. In this case, a mobile station also having the alternate PN code phase offset would properly decode the data bit signal of the second base station. In a typical CDMA system, each base station is designated by a unique PN code phase offset different from the surrounding base stations. This allows a base station to communicate with a mobile station with minimal interference to other mobile stations communicating with other base stations.

Note that an additional transmission to a second mobile station from the first base station, similarly, could use a different code phase. In practice, instead of using different code phases, distinction can be achieved by concatenating codes. For example code phase could be used to distinguish different base stations within a system and a second code could be used to distinguish between mobile stations using same base station. Further information on topic is disclosed in a U.S. Pat. No. 5,103,459, entitled "SYSTEM AND METHOD FOR GENERATING SIGNAL WAVEFORMS IN A CDMA CELLULAR TELEPHONE SYSTEM", the disclosure of which is incorporated by reference herein and also assigned to the Assignee of the present invention.

The system of FIGS. **1** and **2** are greatly simplified but it demonstrates the necessity of time alignment in a digital system in order to transfer data. In a typical CDMA system, the length of the PN sequence used to spread the data bit is on the order of 2^{15} instead of 7. Also in a real system, noise would be present in the signal received at the mobile stations and signal level would vary resulting in the output of the integration varying to some degree. The mobile stations of FIG. 1B have chip timing in that the mobile station knows when the received chips transition. In a real system the chip timing as well as the PN code offset is initially unknown. In a real system, each data bit may be multiplied by only a portion of the complete PN code cycle instead of the entire sequence as shown in FIGS. **1** and **2**. The modulation technique of FIGS. **1** and **2** is biphase. Systems that use multiphase signaling techniques, such as quadrature phase signaling techniques, follow the general principles illustrated in FIGS. **1** and **2**.

The process of attaining time alignment is called acquisition. FIG. **3** is a basic block diagram of how an acquisition may be performed within a mobile station. PN code generator **140** produces the PN sequence at a phase offset determined by acquisition controller **130**. The despreading operation is performed by multiplier **100** and integrator **110** as described above over a first number of PN code chips. Threshold detector **120** compares the integration result to a threshold. When acquisition begins, the mobile station attempts to despread the received signal with an initial PN code phase guess. The initial output of the integration process is passed to threshold detector **120**. If the result is less than the threshold, acquisition controller **130** commands PN code generator **140** to shift the PN code applied to the received signal and the process is repeated. If the integration result exceeds the threshold, the despreading operation may

be performed for a greater number of PN code chips at the same PN code phase to assure that the acquisition is true and not a false reading caused by excessive noise. The second integration result is compared to a higher threshold. If the second integration result is less than the higher threshold, the PN code is shifted and the process continues using the first threshold. If the second integration result exceeds the second threshold, then the acquisition is confirmed and the mobile station begins to receive the signal from the base station.

Inherently the process of acquisition described above requires a finite time duration to select the proper PN code phase. The acquisition time is highly variable and dependent on many factors. For example if the signal to noise level is low then the integration time needs to be longer resulting in an increased acquisition time. Also the accuracy of the first guess affects the acquisition time. If the first guess is right then the acquisition time is minimal.

As was the case with FIGS. **1** and **2**, FIG. **3** and the corresponding algorithm are greatly simplified. Since the phase of the incoming signal are not known, processing may be done on complex I and Q channels. In many systems, the signal itself that the acquisition circuitry is attempting to acquire is a multiphase signal requiring appropriate circuit modifications. Also, the threshold detector may compute a decision statistic. The acquisition controller uses a set of the decision statistics to choose an hypothesis of the most likely PN code phase and chip timing. The acquisition process can be accelerated by having multiple acquisition circuits working in parallel. However, parallel acquisition circuits inherently requires a corresponding increase in circuitry. The acquisition process is complex and can be done through a myriad of techniques that are well known to the communications engineer.

One aspect of the present invention is directed to a method for attaining an initial PN code phase which is within known limits of the proper PN code phase in order to reduce acquisition time when the handoff from analog mode to digital mode is made. With the knowledge that the initial PN code phase is within predetermined limits, the acquisition algorithm may be optimized for the special case acquisition which occurs following a handoff from analog mode to digital mode to provide minimal acquisition time. In the simple example of FIG. **3**, if the code phase is known to be within two chips, both chips may be initially searched using a long integration time and high threshold to minimize the average acquisition time.

As mentioned above, within the current mobile phone system (AMPS) there is a mechanism to communicate digital information bits to the mobile station while an active call is in progress using the forward voice channel (FVC) data stream. A FVC data stream is used to communicate handoff messages and other messages to the mobile station. In the exemplary CDMA embodiment, the FVC data stream is utilized to transmit the above-referenced Handoff Direction Message to the mobile station.

FIG. **4**A is a partial block diagram of a mobile station having a dual-mode receive chain operative to process signals received both over analog and CDMA communication channels. The incoming analog or CDMA signal is received from the base station by antenna **250**. The signal is conditioned and converted to baseband by receive radio frequency (RF) circuitry **200**. The analog output of receive RF circuitry **200** is processed by receive signal processing circuitry **210**. When a FVC data stream is sent to the mobile station during analog mode operation, receive signal processing circuitry **210** converts the FVC data stream to digital bits for processing by microprocessor and software control **220**. Microprocessor and software control **220** recognizes the command sent by the base station and acts upon it accordingly.

As was also mentioned above, signaling messages can be sent from the mobile station to the base station over the reverse voice channel (RVC) once an analog connection has been established. In addition, the mobile station can send signaling tones (ST) over the RVC to acknowledge commands or to activate certain special functions. For example, an ST is used by the mobile station to accept a "call waiting" call. An ST is a 10 kHz tone with a peak deviation of 8 kHz.

Referring again to the block diagram FIG. **4**A, microprocessor and software control **220** determines a need to transmit an ST and sends a command to transmit an ST of a specified duration to transmit signal processing **230**. Transmit signal processing **230** produces the proper analog control signal to provide to transmit RF circuitry **240**. Transmit RF circuitry **240**, in turn, transmits the ST to the base station for the duration of the control signal via antenna **250**. In an exemplary embodiment separate CDMA signal processing (not shown) provides the CDMA modulation waveform transmitted to the base station by transmit RF circuitry **240**.

Turning now to FIG. **4**B, there is shown a more detailed block diagram representation of the dual mode receive chain comprising receive RF circuitry **200** and receive signal processing **210**. The RF receive circuitry is seen to include a low-noise amplifier (LNA) **260** feeding a frequency converter **264**.

The other input to the frequency converter **264** is a local oscillator (LO) signal generated by a tunable frequency synthesizer **266** whose frequency is in turn controlled by microprocessor **220** (FIG. **4**A). The LO signal will generally be set differently during operation in the analog and CDMA modes. The signal from LNA **260** is converted to an intermediate frequency (IF) signal, which may differ in frequency during analog and spread spectrum modes of operation. The frequency converter **264** includes a mixer (not shown) which combines the signal produced by the LNA **260** with the LO signal, and thereby generates the desired IF signal along with various other mixer products.

As is indicated by FIG. **4**B, the IF signal is amplified within an IF amplifier **268**. The mixer products and other spurious signal energy are removed from the signal produced by the IF amplifier **268** by the bandpass filters (BPFs) **270** and **272**, which are respectively centered about the operating frequencies of analog and CDMA signal processing blocks **274** and **276**.

Within the CDMA processing block **276** the filtered IF signal from the bandpass filter **272** is further demodulated and despread in a manner familiar to those skilled in the art. Similarly, within the analog processing block **274** the narrowband analog signal from BPF **270** is demodulated in a conventional manner.

As mentioned previously with respect to alternative embodiments, time alignment may be performed within the mobile station. In embodiments where time alignment is to be performed within the mobile station, the phase of a timing waveform transmitted by the base station with which the mobile station is currently in analog communication is recovered within a timing extraction circuit **280**. Since the timing extraction circuit **280** will only be present within embodiments of the mobile station configured for self-alignment, it is shown in phantom in FIG. **4**B. The implementation of timing extraction circuit **280** may be identical to the circuit illustrated in FIG. **12** which is described later herein.

Furthermore with respect to this alternative embodiment, the timing waveform transmitted by the base station and the

circuitry is used to generate the waveform may be the same as in the main embodiment where the mobile station generates and transmits the timing waveform. Details on the timing waveform and the circuitry necessary to generate it are discussed with reference to FIGS. **6** and **7** where the same is illustrated. Typically in communications on the FVC a Supervisory Auditory Tone (SAT) is continuously modulated on the carrier. The SAT is typically transmitted at one of three frequencies 5970, 6000, or 6030 Hz with a frequency deviation on ±2 kHz±10 percent. The pulsing, i.e. on and off transmission, of the SAT would provide the necessary timing waveform. This function is described with reference to FIG. **7** where a SAT is generated rather than a ST. In the alternative a ST may be used where it is pulsed on and off as is discussed with reference to FIGS. **6** and **7**.

Additional details will now be provided as to the manner in which the FVC data stream and the ST are utilized within a preferred embodiment of the invention to attain preliminary time alignment of the mobile station in analog mode. When an analog mode to digital mode handoff is required, the base station, using the present FVC data stream format, sends a word to the mobile station to begin time alignment. At the mobile station, referring again to FIG. **4A**, receive signal processing **210** converts the FVC data stream containing the alignment word to digital bits for processing by microprocessor and software control **220** in the same manner as it does for any other FVC data stream. Microprocessor and software control **220** must be reprogrammed to recognize the alignment word since the word is a supplementary word created for this invention. The receipt of the alignment word initiates a series of actions by the mobile station illustrated in FIG. **5**.

The events of FIG. **5** begin when the alignment word is received at the mobile station as indicated by block **300**. The mobile station inhibits other functions using ST, block **310**, so that extraneous ST transmissions are not sent by the mobile station during this process. The mobile station starts a cyclical counter called an interval timer which counts from 0 to $T_{INTERVAL}$ as indicated by block **320**. The length of $T_{INTERVAL}$ is related to one PN code cycle time of the base stations in the system. The interval timer provides the basis for the initial PN code phase offset when the mobile station enters digital mode. Starting at the same time during each cycle of $T_{INTERVAL}$, the mobile station transmits an ST for a fixed time interval, T_{PULSE}. In this example the ST is started whenever the interval timer clock cycles through 0. The mobile station therefore monitors the interval timer as indicated by block **330** and periodically sends a command to the transmit signal processing circuitry to transmit an ST, block **340**. The duration of the ST signal, T_{PULSE}, must be long enough to reliably ensure that the base station receives sufficient total energy from a sequence of ST pulses to attain a good estimate of the ST timing taking into account the received signal to noise ratio. The mobile station also monitors the FVC for subsequent FVC data stream words. One such word is the interval timer update word that indicates that the interval timer should be delayed or advanced, block **350**. If such a word is received the mobile station delays or advances the interval timer thereby causing a one time increase or decrease of time between ST transmission respectively, block **360**.

If the base station chooses to abort the handoff from analog mode to digital mode, it notifies the mobile station which is monitoring for such a command, block **370**. In this case, the mobile station simply returns to normal analog mode operation, block **380** and aborts the time alignment procedure. Should the abort command not be communicated to the mobile station, the alignment procedure continues. The mobile station determines if an align complete command has been communicated to the mobile station, block **390**. If no align complete command is received, the mobile station repeats the alignment process beginning at block **330**. When the base station determines that the time alignment is complete, it notifies the mobile station by a subsequent FVC data stream word, block **390**. The mobile station is ready to enter digital mode using the PN code phase stored as the interval timer, block **400**. In this example, upon entering digital mode the mobile station uses the knowledge that the PN code offset is zero approximately when the interval timer is equal to zero.

FIG. **6** illustrates the ST waveform transmitted by the mobile station during the time alignment process. Three ST transmission bursts **500** are shown. An exemplary T_{PULSE} and $T_{INTERVAL}$ are also shown. It is the leading edge in time of each ST which is aligned to the PN code phase of the base station with which the mobile station is going to establish communication upon entering digital mode. Between ST pulses, the mobile station continues normal RVC activities.

The functions presented in FIG. **5** and described above do not require the mobile station to perform functions that are not within the ability of a standard analog mobile station. Additional software is needed to recognize the new FVC data stream words and to perform the functions of FIG. **5** but no duplication or additional hardware is required. Such software is readily devised by one skilled in the art. The burden of additional functions and the subsequent additional circuitry is applied to the base station.

The timing method, which in FIG. **5** comprises the $T_{INTERVAL}$ timer which is advanced or delayed in response to a command from the base station, can be implemented in a variety of alternative embodiments. FIG. **7** is a block diagram illustrating a signaling tone (ST) control configuration. Voice generation **505** drives FM modulator **520** in normal RVC operation. Switch **525** is closed for duration T_{PULSE} to connect to adder **515** to ST generation **510**. Within some phones, the voice generation may be paused for the duration of T_{PULSE}. The driving signal to close switch for the duration T_{PULSE} comes from timing device **535** which as stated above can be implemented in a variety of alternative embodiments. FIG. **8** is a block diagram illustrating an embodiment of timing device **535** using a register. The output of register **550** drives switch **525** of FIG. **7**. The register value is added by adder **545** to the output of increment controlled by base station **540**. The output of register **550** is a function of the register value being greater than a predetermined threshold. If the output of increment control **540** decreases, the time between ST pulses is increased. If the output of increment control **540** increases, the time between ST pulse is decreased.

FIG. **9** is a block diagram illustrating an alternative embodiment of timing device **535'** using a counter. The output of counter **555** drives switch **525** of FIG. **7**. Counter **555** counts cyclically producing the output signal when ever the terminal count is reached. Counter **555** receives a new value from reset value controlled by base station **560**. If the reset value is closer to the terminal count of the counter than the value before reset, the pulses are advanced in time. If the reset value is closer to the initial count of the counter than the value before reset, the pulses are delayed in time.

To complete the time alignment of the mobile station, analog mode operation and digital mode operation must be linked at the base station. FIG. **10** illustrates an exemplary block diagram of the time alignment structure at a base station. System controller **615** controls the handoff and time

alignment process. System controller **615** may communicate with other base stations and need not be co-located with the remainder of the base station. One system controller may control multiple base stations. Digital mode operation **600** supplies an indication when the PN code phase is zero. Digital mode operation **600** need only supply the indication not the PN code itself. Analog mode operation **610** supplies linking operation **605** with the ST reception information from the mobile station. Analog mode operation **610** need only supply an indication corresponding to leading edges of the incoming signal not the actual received waveform. Linking operation **605** compares the PN code indication to the ST indication and determines an error. Linking operation **605** selects the proper interval update FVC data stream word based on the error. Analog mode operation **610** then transmits the interval update FVC data stream to the mobile station.

The partitioning of the functions shown in FIG. **10** is exemplary and alternative partitioning to complete the functions are numerous. For example instead of linking operation **605** selecting the proper interval update FVC data stream word, link operation **605** could passes the error information to analog mode operation **610** where the proper interval update FVC data stream word would be created. The function could also be implemented by passing the error signal to system controller **615** where the proper word would be created and passed to analog mode operation **610** for transmission.

FIG. **11** illustrates the flow of operation in the time alignment process within the base station and system controller. In block **700**, the system controller, determines the need to perform an analog mode to digital mode handoff for a particular mobile station. The system controller commands the analog mode operation to send the alignment command to the mobile station, block **710**, using a standard FVC data stream word as discussed in connection with the mobile station operation. The system controller also commands the analog mode operation to supply the indications of the ST burst from the particular mobile station in response to the alignment command. The system controller commands the digital mode operation to supply proper PN code phase indications of the destination the base station, block **720**. The system controller commands the linking operation to begin the comparison function to determine time error and to provide proper interval timer update information for the particular mobile station based on that error, block **730**. The linking operation determines an error with units of time from the comparison of the two incoming signals, block **740** and passes the appropriate information to the analog mode operation. The analog mode operation transmits a subsequent FVC data stream comprising a word indicating the interval timer update action for the mobile station, block **750**. The linking operation also compares the error to a limit value to determine when the alignment is adequate, block **760**. If the error is within the limits set, the particular mobile station is ready for the system controller to command an analog mode to digital mode handoff, block **770**. The linking structure monitors the system controller for an abort message indicating that the handoff, and therefore the alignment, is no longer necessary, block **780**. If received, the system returns to normal analog mode operation and the linking operation is freed for use with other mobile stations, block **790**. If the process is not aborted, the alignment process returns to block **740** and alignment continues.

It is not necessary that the mobile station receive a series of update messages. The base station could send a single interval update to the mobile station. In such a case the mobile station might never transmit the aligned ST pulse and the interval update message would also indicate the termination of the alignment process.

At the base station, the indication of the ST pulses can be developed as shown in FIG. **12**. The baseband analog signal is multiplied by a cosine wave and a sine wave at the frequency of the ST by mixers **625** and **630**, each producing a resultant D.C. signal. Unwanted components at the output of mixers **625** and **630** are filtered by low pass filters **635** and **640** respectively which are matched to the ST pulse transmitted by the mobile station. The filtered outputs are squared by square law device **645** and **650** and added by adder **655** to produce an estimate of power at that time offset. The output of adder **655** is compared to a threshold by threshold detector **690**. If the output of adder **655** exceeds the threshold, an indication of the ST pulse leading edge is generated. This specific implementation can be replaced by a variety of detection circuits well known in the field.

The above description assumes that the linking operation is supplied an indicator for each of the ST pulses. This may not be the preferred embodiment. For example, significant processing may be required to perform the linking operation for every ST pulse. The alternative method described below provides a filtering process. In addition the indication generated by receiving a single ST pulse may have significant time errors in a fading environment.

The phase comparison operation performed by the linking operation is a basic function performed in many modern circuits. An analog phase detector, as used in analog phase lock loops, can be used which produces an analog signal proportional the error. Alternative, the operation could be performed as a solely digital function producing a digital signal indicative of the error. The error signal produced could be signed or absolute. For example, a signed system would be capable of sending the mobile station. commands to both advance and delay the timing while an absolute error system would always send a command to advance timing. The comparison could produce a magnitude error meaning that the mobile station could be commanded to advance the timing by varying increments of time depending on the magnitude of the error. Signed and magnitude error information serves to speed the alignment process in analog mode.

FIG. **13** illustrates the timing used with one implementation. Pulse train **620** represents the ST pulses as sent by the mobile station. The pulse stream that arrives at the base station is corrupted by noise, by multipath and by interference. To find the leading edge of the pattern, the base station equipment samples the incoming signal at a sample period, ΔT, a multiple of which is $T_{INTERVAL}$. Samples displaced $T_{INTERVAL}$ in time are added together over multiple cycles of the ST signal and accumulated results are stored. **M1** indicates a set of samples, the sum which is stored in memory, e.g. in memory location **1**. **M2** represent the next set of samples which arrive ΔT after each of the samples of **M1** and the sum of which is also stored in memory, e.g. in memory location **2**. **M3** represents the next set of pulses.

FIG. **14** shows a block diagram of a configuration to implement in the base station the functions associated with FIG. **13** and incorporating the structure of FIG. **12**. The output of adder **655** is added by second adder **660** with the stored value in the corresponding memory location and the result restored in memory **665**. The memory location with the highest accumulated value occurring first in time is the best estimate of the leading edge of the pulse train.

The analog mode circuitry can also provide a signal termed reliability. This signal could be created by comparing

the relative magnitude of the values stored in memory to produce a signal that the system controller could use to determine the probability that the leading edge of the mobile station is the same as the leading edge assumed by the base station. The value of reliability could dictate alignment algorithm parameters including the duration of the alignment, T_{PULSE}, and $T_{INTERVAL}$. Reliability can be provided even if alternative leading edge detection methods are used.

An alternative embodiment of the leading edge detection mechanism is shown in FIG. **15**. Standard FM demodulator **670** produces baseband voice signal and the ST signal. Each filter **675** in a bank of filters at the ST frequency produces a signal for a corresponding accumulator **680**. Each accumulator **680** in the bank of accumulators, accumulates signal strengths over a different time period. Compare and choose circuitry **685**, which may be implemented in microprocessor form under program control, selects the output having the largest value and therefore indicate the most likely time of the pulse occurrence. Again compare and choose circuitry **685** may produce a reliability measurement based on the output of the bank of accumulators.

The effectiveness of the alignment process described above is highly dependent on many variables. The precision with which the analog mode operation is able to supply ST indications depends upon the algorithm and it's parameters, the signal to noise ratio and the fading on the channel.

In a standard cellular analog system using the above techniques, the error in timing when the analog mode to digital mode handoff is made can be on the order of a few milliseconds. After handoff, an error of this magnitude would produce a digital mode alignment time on the order of 100 milliseconds as compared to the intolerable several second discontinuity in service without the use of this technique.

The procedure defined herein is a general alignment procedure for an analog mode system and the uses and applications of such a procedure are numerous. The example method described herein was implemented using the ST of the AMPS system; however analogous alternative pulses could easily be utilized within other operating systems. Also operating within the AMPS protocol, the ST may be rapidly turned on and off at regular or irregular intervals over the duration T_{PULSE}. A rapid on/off sequence within of an ST can increase the precision with which the analog mode is able to supply the ST indications. Such a sequence could also be used to add a special indication to a subset of burst in a series of burst from a single mobile station.

Likewise the timing to which the mobile station is aligned with is not necessarily PN code sequence zero phase indication and can be any signal indicating time. The alignment for the purposes of handoff is applicable to many digital systems such as TDMA. Also the alignment method could be used to implement functions that require timing adjustments in purely analog mode.

The method described above synchronizes the mobile station to an overall system clock modulo $T_{INTERVAL}$. It does not impart absolute time of day information to the mobile station. However having attained the time alignment, an absolute time of day or other timing information can be imparted to the mobile station using a method based on the synchronization already achieved.

The uses of absolute time of day are numerous within a mobile station. An obvious use is to provide an accurate clock to the user. Another use can be illustrated by a continuation of the CDMA system example. In the example if the mobile station is requested to handoff from analog mode to digital mode, the mobile station enters digital mode and performs an acquisition of pilot time and begins to receive data from the base station. Before the call can be re-established with the mobile station the base station must transfer to the mobile station system configuration and parameter information. It must also impart to the mobile station a secondary PN code state. The secondary code is called the long code since the PN code sequence length is much longer than the PN code sequence used for acquisition. Further details on the use of the secondary PN code sequence can be found in the previously mentioned U.S. Pat. No. 5,103,459. Like the absolute time of day, the long code state can not be determined based solely on the acquisition of the short PN code since the short PN code repeats many times within one long PN code cycle. Therefore the long code state information can be considered analogous to time of day information.

Returning to the example of the mobile station operating under the AMPS protocol, a normal FVC data stream containing a word indicating specific time of day information is not able to transfer this information to the mobile station with accuracy. The words of a FVC data stream are repeated 11 times. The receive signal processing circuitry typically passes on to the microprocessor and software control circuitry the first of those words which is properly decoded. Each 40 bit word and 48 bit overhead sequence is transmitted at a 10 kilobit rate making the time difference between two words about 8.8 milliseconds and the time between the start of the first word and the start of the last word of a single FVC data stream 88 milliseconds. Obviously this does not allow absolute timing errors on the order of 1 millisecond to be transferred to the mobile station in such a manner.

However relying on the information about time that the mobile station and the base station have attained during the synchronization process described above, the transmission of precise time of day information is possible. The message sent from the base station, instead of transmitting the value of the current time, transmits a signal which indicates that at some future time as dictated by the interval timer, the time will have a certain value.

The time of day transfer is illustrated in FIG. **16** for an AMPS signaling protocol example. The ST pulses **800** are transmitted from the mobile station periodically over time. The base station has completed the alignment function and therefore has knowledge of the mobile station ST time relative to a time of day indication stored at the base station. The base station transmits a FVC data steam using the standard format containing a word indicating that at some future time related to the interval timer the time will be some value. The mobile station recognizes the command and sets or resets the value absolute time of day to match the message. Note that is not necessary that the ST pulse continue to be transmitted from the mobile station during this process.

If is evident from examination of FIG. **16** that if the interval time is less than the time it takes to transmit and decode the entire FVC data stream that an ambiguity maybe introduced into the procedure. This ambiguity can be removed by any one of several methods. The original interval time, $T_{INTERVAL}$, can be changed to a second value interval time, $T_{2INTERVAL}$, to accommodate the time duration of an FVC data stream. This situation is illustrated in FIG. **16**. $T_{2INTERVAL}$ is of sufficient duration to allow the transmission of FVC time message **820** between ST pulses. The FVC time message **820** indicates the absolute time of day at start of the next ST burst **810**.

Another method of overcoming ambiguity involves adding an indicator to a subset of the ST pulses. The indicator is detectable by the base station and periodically transmitted by the mobile station at a period of sufficient duration to accommodate the time duration of an FVC data stream. FIG. **17** illustrates the timing of such a method. ST pulses with indicators **850** are transmitted at a rate that allows FVC time message **870** to be fully transmitted and decoded. FVC time message **870** indicates that, at the start of the next ST burst containing an indicator, at time **860**, the absolute time of day.

The transfer of the long code state to the mobile station decreases the acquisition time in digital mode by removing the necessity of transferring the information to the mobile station between the time the call is dropped by the analog system and the start of communication between base station and the mobile station in digital mode. As with the time alignment function, the absolute time of day requires the mobile station to recognize a new set of FVC data stream words but does not require additional hardware. As described above, the absolute time of day transfer is only exact if the time alignment is achieved. However use of the time alignment can be independent of the use of the absolute time of day transfer.

The use of absolute time of day transfer is discussed herein in conjunction with decreased acquisition time in digital mode following a handoff from analog mode. The uses of this function are numerous and the systems in which such a function is advantages are diverse. The method can be used in a solely analog situation to provide absolute time of day information.

The previous description of the preferred embodiments is provided to enable any person skilled in the art to make or use the present invention. The various modifications to these embodiments will be readily apparent to those skilled in the art, and the generic principles defined herein may be applied to other embodiments without the use of the inventive faculty. Thus, the present invention is not intended to be limited to the embodiments shown herein but is to be accorded the widest scope consistent with the principles and novel features disclosed herein.

We claim:

1. In a multi-channel communication system in which a mobile station is designed for communication with one or more base stations over analog and digital communication channels using analog and digitally modulated communication signals, respectively, a method for maintaining a connection initiated on the analog communication channel comprising the steps of:

time aligning said mobile station to a predetermined system time of said base station;

identifying an available digital communication channel; and

transmitting to said mobile station over said analog communication channel a handoff message and performing handoff of the connection to the available digital communication channel.

2. The method of claim **1** further including the steps of:

comparing a predetermined characteristic of said analog modulated communication signals received by said base station to a criteria for channel handoff; and

generating said handoff message when said predetermined characteristic corresponds to said criteria for channel handoff.

3. The method of claim **2** wherein said predetermined characteristic is signal strength of said received analog signals, said method further including the steps of measuring said signal strength and comparing said measured signal strength to a handoff threshold.

4. The method of claim **1** further including the steps of:

comparing a predetermined characteristic of analog modulated communication signals received by said mobile station from said base station to a criteria for channel handoff;

transmitting a message indicative of the result of said comparison from said mobile station to said base station; and

generating said handoff message when said predetermined characteristic corresponds to said criteria for channel handoff.

5. The method of claim **1** further including the steps of:

comparing a predetermined characteristic of said digitally modulated communication signals received by said base station to a criteria for channel handoff; and

generating said handoff message when said predetermined characteristic corresponds to said criteria for channel handoff.

6. The method of claim **1** wherein said step of time aligning said mobile station includes the steps of:

transmitting from said mobile station to said base station over said analog channel a periodic signal, said periodic signal being of a phase related to timing of said digital communication channels said mobile station;

detecting, at said base station, said phase of said periodic signal and generating an error signal by comparing the detected phase to a reference signal derived from said predetermined system time; and

adjusting said phase of said periodic signal in accordance with said error signal so as to at least partially align timing of digital mode of operation of said mobile station to said predetermined system time.

7. The method of claim **6** wherein each period of said periodic signal includes a leading edge, and wherein said step of adjusting said phase includes the step of delaying at said mobile station leading edges of said periodic signal in accordance with said error signal.

8. In a code division multiple access (CDMA) spread spectrum communication system in which a mobile station is designed for communication with a base station over a digital communication channel using spread spectrum communication signals and over an analog communication channel using analog communication signals, a method for directing communications between said mobile station and said base station comprising the steps of:

time aligning said mobile station to a predetermined system time of said base station during communication between said mobile station and said base station over said analog communication channel; and

transmitting from said base station to said mobile station over said analog communication channel a handoff message identifying an available CDMA communication channel, and establishing communication between the mobile and base stations over the available CDMA communication channel.

9. The method of claim **8** further including the step of terminating communication over said analog communication channel simultaneously with establishment of communication over said CDMA communication channel.

10. The method of claim **8** further including the steps of:

comparing a predetermined characteristic of analog signals received by said base station to a criteria for channel handoff; and

generating said handoff message when said predetermined characteristic corresponds to said criteria for channel handoff.

11. In a multi-channel communication system in which a mobile station is designed for communication over an analog communication channel with a first base station using analog modulated communication signals, and for communication over a digital communication channel with a second base station using digitally modulated communication signals, a method for transferring a connection initiated on the analog communication channel to the digital communication channel comprising the steps of:

time aligning said mobile station to a predetermined system time, said predetermined system time being provided to said mobile station by a system controller over said analog communication channel via said first base station; and

transmitting from said first base station to said mobile station over said analog communication channel a handoff message and performing handoff to the digital communication channel associated with said second base station.

12. The method of claim **11** further including the steps of:

comparing a predetermined characteristic of analog modulated communication signals transmitted over said analog communication channel to a criteria for channel handoff; and

generating said handoff message when said predetermined characteristic corresponds to said criteria for channel handoff.

13. The method of claim **12** wherein said predetermined characteristic is signal strength of said received analog signals, said method further including the steps of measuring said signal strength at said first base station and comparing said measured signal strength to a handoff threshold.

14. The method of claim **11** further including the steps of:

comparing a predetermined characteristic of digitally modulated communication signals transmitted over said digital communication channel to a criteria for channel handoff;

transmitting a message indicative of the result of said comparison from said mobile station to said base station; and

generating said handoff message when said predetermined characteristic corresponds to said criteria for channel handoff.

15. The method of claim **11** wherein said step of time aligning said mobile station includes the steps of:

transmitting from said mobile station to said first base station over said analog channel a periodic signal, said periodic signal being of a phase related to timing of said digital mode operation of said mobile station;

detecting, at said first base station, said phase of said periodic signal and generating an error signal by comparing the detected phase to a reference signal derived from said predetermined system time; and

adjusting said phase of said periodic signal in accordance with said error signal so as to at least partially align timing of digital mode of operation of said mobile station to said predetermined system time.

16. In a multi-channel communication system in which a mobile station is designed for communication with one or more base stations over analog and code division multiple access (CDMA) communication channels using analog and spread spectrum communication signals, respectively, wherein each base station transmits a common pilot signal of a different code phase with respect to other base stations in said system, a method for directing communications between said mobile station and said base stations comprising the steps of:

identifying base stations within the vicinity of said mobile station at which usable signal transmissions from said mobile station are received;

time aligning said mobile station to a predetermined system time during communication between said mobile station and a first of said base stations over said analog communication channel; and

transmitting from said first base station to said mobile station over said analog communication channel a handoff message identifying an available CDMA communication channel, and establishing communication between the mobile station and a second base station over the available CDMA communication channel.

17. The method of claim **16** wherein said handoff message further identifies:

the frequency of said available CDMA communication channel; and

the code phase of the pilot signal transmitted by said second base station.

18. In a multi-channel communication system in which a mobile station is designed for communication with one or more base stations over analog and digital communication channels using analog and digitally modulated communication signals, respectively, a system for maintaining a connection initiated on the analog communication channel comprising:

a time alignment network, at least partially disposed within a first of said base stations in communication with said mobile station over said analog communication channel, for time aligning said mobile station to a predetermined system time;

a system controller for identifying an available digital communication channel within said communication system; and

a first base station transmitter for transmitting to said mobile station over said analog communication channel a handoff message and performing handoff of the connection to the available digital communication channel.

19. The system of claim **18** wherein said first base station further includes a base station receiver for comparing a predetermined characteristic of said analog modulated communication signals received by said base station to a criteria for channel handoff, wherein said system controller generates said handoff message when said predetermined characteristic corresponds to said criteria for channel handoff.

20. The system of claim **19** wherein said predetermined characteristic is signal strength of said received analog signals, said base station receiver including a signal strength measurement circuit for measuring said signal strength and comparing said measured signal strength to a handoff threshold.

21. The system of claim **18** wherein said mobile station further includes a mobile station receiver for comparing a predetermined characteristic of said analog modulated communication signals received by said mobile station to a criteria for channel handoff, wherein said system controller generates said handoff message when said predetermined characteristic corresponds to said criteria for channel handoff.

22. In a code division multiple access (CDMA) spread spectrum communication system in which a mobile station is designed for communication with a base station over a digital communication channel using spread spectrum communication signals and over an analog communication chan-

nel using analog communication signals, a system for directing communications between said mobile station and said base station comprising:

a time alignment network of said base station for time aligning said mobile station to a predetermined system time during communication between said mobile station and said base station over said analog communication channel; and

a base station transmitter for transmitting from said base station to said mobile station over said analog communication channel a handoff message identifying an available CDMA communication channel wherein communication is subsequently established between the mobile and base stations over the available CDMA communication channel.

23. The system of claim **22** further including a system controller for terminating communication over said analog communication channel simultaneously with establishment of communication over said CDMA communication channel.

* * * * *