US010614644B2

(12) **United States Patent**
Endo et al.

(10) **Patent No.: US 10,614,644 B2**
(45) **Date of Patent: Apr. 7, 2020**

(54) **KEY INFORMATION MANAGEMENT DEVICE, KEY INFORMATION MANAGEMENT METHOD, AND NON-TRANSITORY COMPUTER-READABLE RECORDING MEDIUM**

(71) Applicant: **TOYOTA JIDOSHA KABUSHIKI KAISHA**, Toyota-shi, Aichi-ken (JP)

(72) Inventors: **Masato Endo**, Nagakute (JP); **Yuichiro Haruna**, Oyama (JP); **Masaki Oshima**, Kitanagoya (JP)

(73) Assignee: **TOYOTA JIDOSHA KABUSHIKI KAISHA**, Toyota-shi (JP)

(*) Notice: Subject to any disclaimer, the term of this patent is extended or adjusted under 35 U.S.C. 154(b) by 0 days.

(21) Appl. No.: **16/139,519**

(22) Filed: **Sep. 24, 2018**

(65) **Prior Publication Data**

US 2019/0122470 A1 Apr. 25, 2019

(30) **Foreign Application Priority Data**

Oct. 24, 2017 (JP) 2017-205675

(51) **Int. Cl.**
G07C 9/00 (2020.01)
H04L 9/08 (2006.01)
(Continued)

(52) **U.S. Cl.**
CPC ***G07C 9/00309*** (2013.01); ***B60R 25/209*** (2013.01); ***B60R 25/2018*** (2013.01);
(Continued)

(58) **Field of Classification Search**
CPC G07C 9/00309; G07C 9/00571; G07C 2009/00452; H04W 4/50; H04W 4/40; B60R 25/209; B60R 25/24; B60R 25/241
See application file for complete search history.

(56) **References Cited**

U.S. PATENT DOCUMENTS

9,365,188 B1 6/2016 Penilla et al.
9,499,129 B1 11/2016 Penilla et al.
(Continued)

FOREIGN PATENT DOCUMENTS

JP 2006-118122 A 5/2006
JP 2006-206225 A 8/2006
(Continued)

Primary Examiner — Thomas D Alunkal
(74) *Attorney, Agent, or Firm* — Hunton Andrews Kurth LLP

(57) **ABSTRACT**

A key information management device includes an information processing device. The information processing device is configured to deliver key information to a mobile terminal as the mobile terminal transmits a predetermined transmission signal toward a vehicle. The key information is information for unlocking the vehicle, starting the vehicle, or unlocking and starting the vehicle. The information processing device is configured to register permission for a user of the vehicle to use a predetermined service using the vehicle. The permission is permission to cause the information processing device to deliver the key information to a mobile terminal of a third party concerned with the predetermined service, other than the user of the vehicle, as an external device concerned with the predetermined service transmits a predetermined request signal.

8 Claims, 10 Drawing Sheets

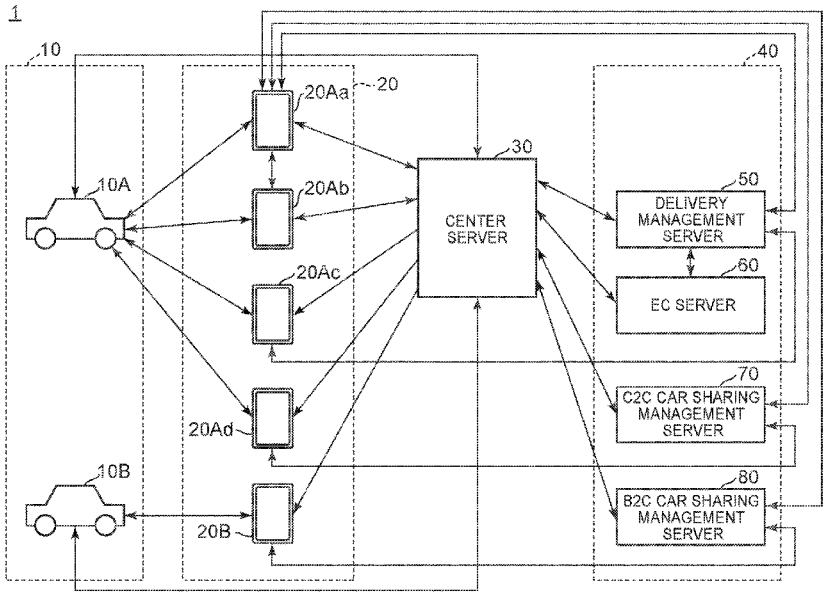

(51) **Int. Cl.**

G06Q 10/08	(2012.01)
B60R 25/20	(2013.01)
B60R 25/24	(2013.01)
H04W 4/40	(2018.01)
H04W 4/50	(2018.01)
H04W 12/06	(2009.01)
H04W 12/08	(2009.01)
H04L 29/08	(2006.01)

(52) **U.S. Cl.**

CPC ***B60R 25/24*** (2013.01); ***B60R 25/241*** (2013.01); ***G06Q 10/0832*** (2013.01); ***G07C 9/00571*** (2013.01); ***H04L 9/088*** (2013.01); ***H04L 9/0891*** (2013.01); ***H04W 4/40*** (2018.02); ***H04W 4/50*** (2018.02); ***H04W 12/06*** (2013.01); ***H04W 12/08*** (2013.01); *G07C 2009/00452* (2013.01); *G07C 2009/00468* (2013.01); *G07C 2009/00547* (2013.01); *G07C 2009/00769* (2013.01); *H04L 67/12* (2013.01)

(56) **References Cited**

U.S. PATENT DOCUMENTS

2011/0191126	A1*	8/2011	Hampshire	G06Q 10/02 705/5
2013/0321178	A1	12/2013	Jameel et al.	
2014/0222298	A1*	8/2014	Gurin	B60W 50/085 701/49
2015/0310532	A1*	10/2015	Gura	G06Q 30/0633 705/7.13
2016/0055699	A1*	2/2016	Vincenti	G07C 9/00309 340/5.61
2017/0178035	A1*	6/2017	Grimm	H04W 12/06
2017/0334395	A1*	11/2017	Lu	B60R 25/24
2019/0001925	A1*	1/2019	Arakawa	G07C 9/00571

FOREIGN PATENT DOCUMENTS

JP	2015-045141	A	3/2015
WO	2016054276	A1	4/2016
WO	2016150532	A1	9/2016

* cited by examiner

FIG. 1

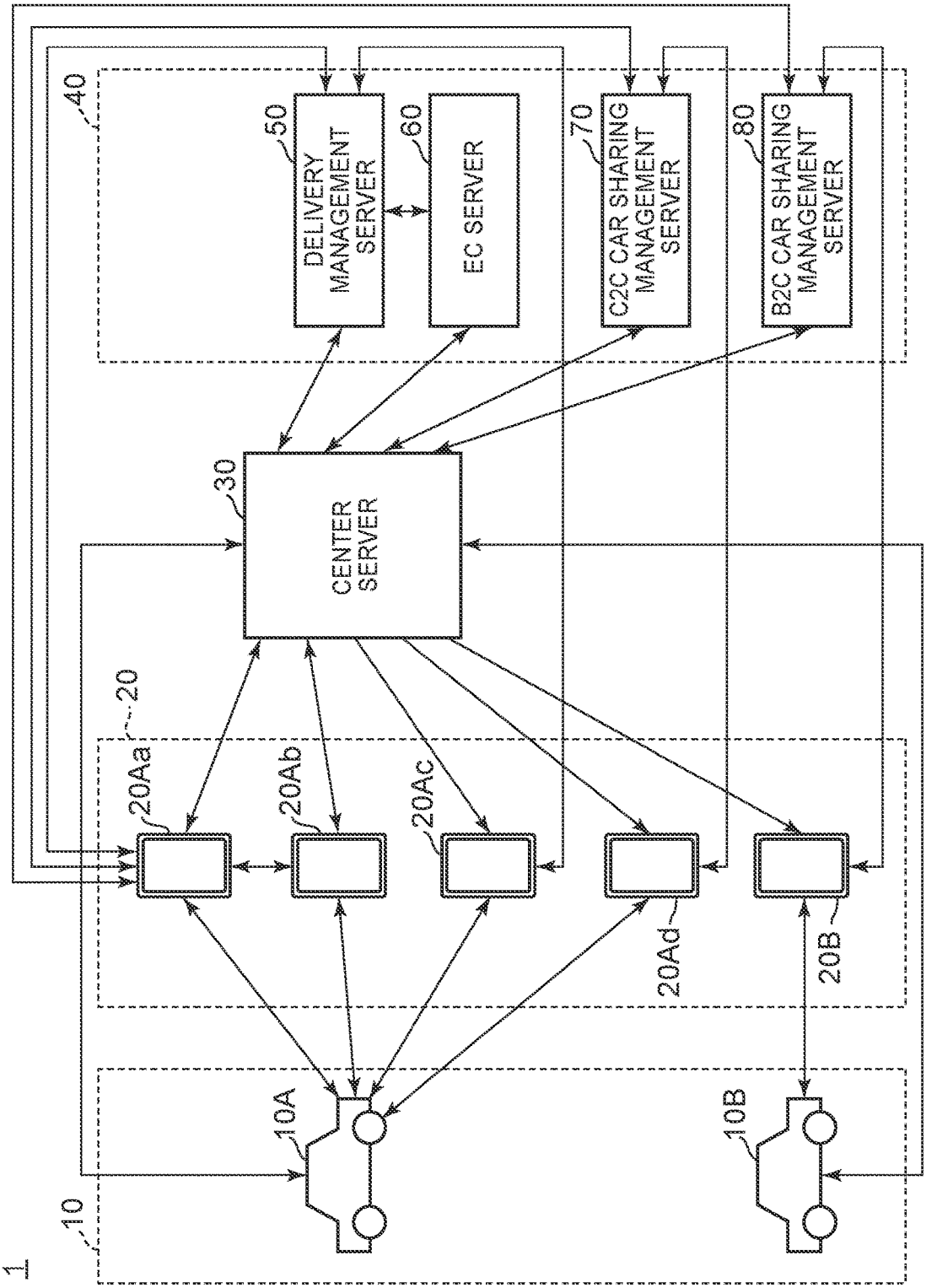
1
10
10A
10B
20
20Aa
20Ab
20Ac
20Ad
20B
30
CENTER SERVER
40
50
DELIVERY MANAGEMENT SERVER
60
EC SERVER
70
C2C CAR SHARING MANAGEMENT SERVER
80
B2C CAR SHARING MANAGEMENT SERVER

FIG. 2

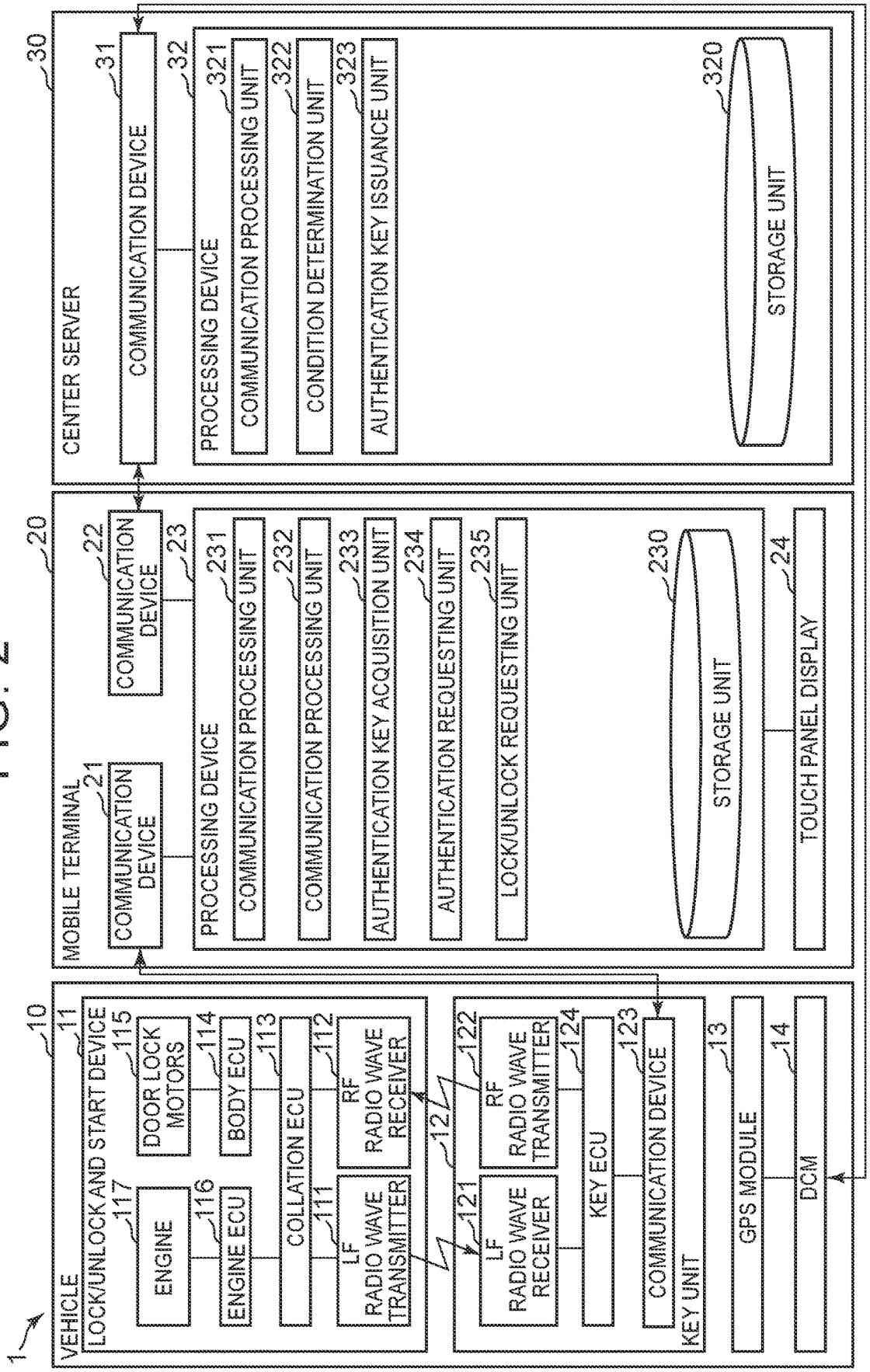
1
VEHICLE
10
LOCK/UNLOCK AND START DEVICE
11
ENGINE
117
ENGINE ECU
116
DOOR LOCK MOTORS
115
BODY ECU
114
COLLATION ECU
113
LF RADIO WAVE TRANSMITTER
111
RF RADIO WAVE RECEIVER
112
12
LF RADIO WAVE RECEIVER
121
RF RADIO WAVE TRANSMITTER
122
KEY ECU
124
COMMUNICATION DEVICE
123
KEY UNIT
13
GPS MODULE
14
DCM
MOBILE TERMINAL
20
COMMUNICATION DEVICE
21
COMMUNICATION DEVICE
22
PROCESSING DEVICE
23
COMMUNICATION PROCESSING UNIT
231
COMMUNICATION PROCESSING UNIT
232
AUTHENTICATION KEY ACQUISITION UNIT
233
AUTHENTICATION REQUESTING UNIT
234
LOCK/UNLOCK REQUESTING UNIT
235
STORAGE UNIT
230
TOUCH PANEL DISPLAY
24
CENTER SERVER
30
COMMUNICATION DEVICE
31
PROCESSING DEVICE
32
COMMUNICATION PROCESSING UNIT
321
CONDITION DETERMINATION UNIT
322
AUTHENTICATION KEY ISSUANCE UNIT
323
STORAGE UNIT
320

FIG. 3

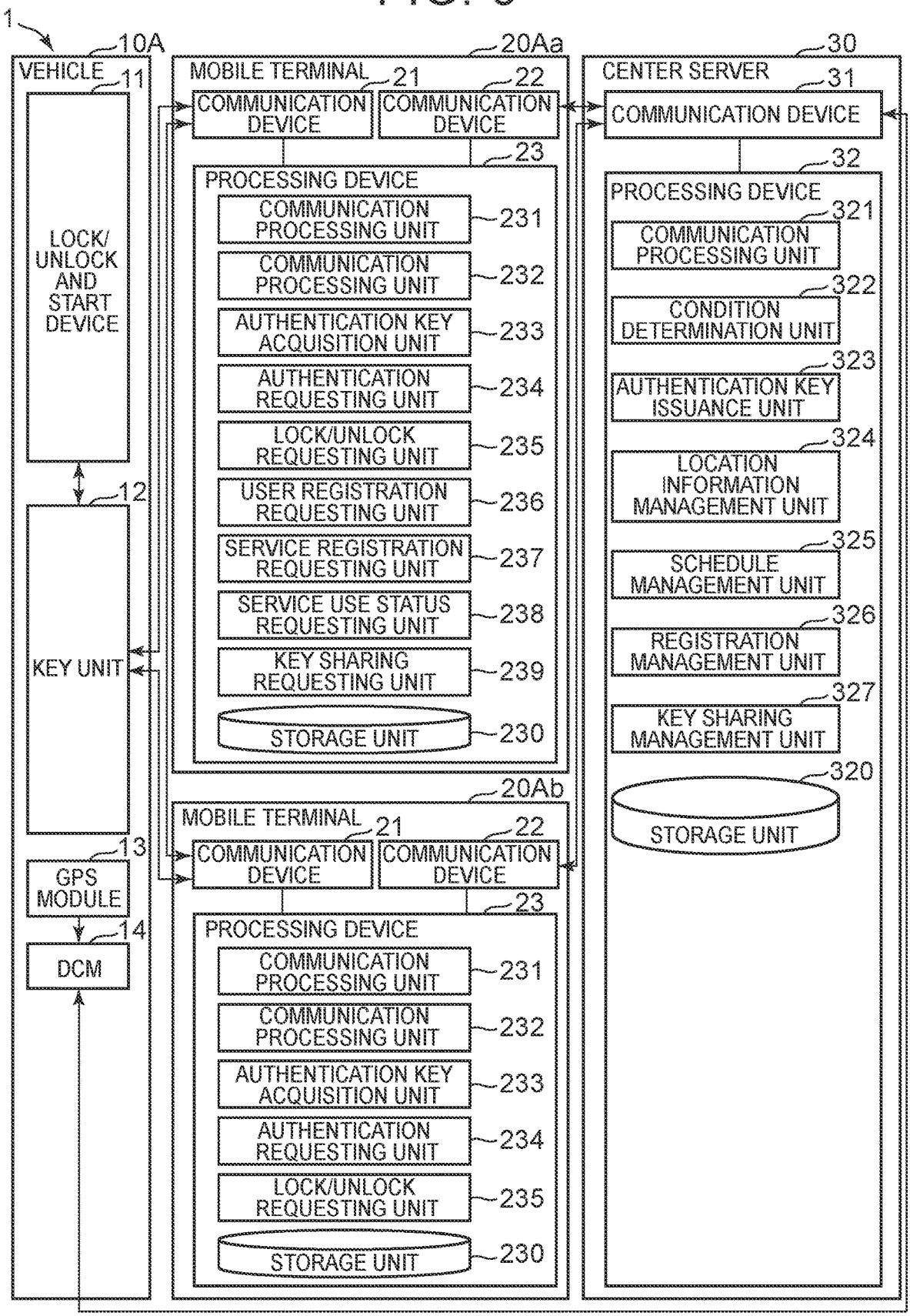
1
10A
VEHICLE
11
LOCK/ UNLOCK AND START DEVICE
12
KEY UNIT
13
GPS MODULE
14
DCM
20Aa
MOBILE TERMINAL
21
COMMUNICATION DEVICE
22
COMMUNICATION DEVICE
23
PROCESSING DEVICE
COMMUNICATION PROCESSING UNIT 231
COMMUNICATION PROCESSING UNIT 232
AUTHENTICATION KEY ACQUISITION UNIT 233
AUTHENTICATION REQUESTING UNIT 234
LOCK/UNLOCK REQUESTING UNIT 235
USER REGISTRATION REQUESTING UNIT 236
SERVICE REGISTRATION REQUESTING UNIT 237
SERVICE USE STATUS REQUESTING UNIT 238
KEY SHARING REQUESTING UNIT 239
STORAGE UNIT 230
20Ab
MOBILE TERMINAL
21
COMMUNICATION DEVICE
22
COMMUNICATION DEVICE
23
PROCESSING DEVICE
COMMUNICATION PROCESSING UNIT 231
COMMUNICATION PROCESSING UNIT 232
AUTHENTICATION KEY ACQUISITION UNIT 233
AUTHENTICATION REQUESTING UNIT 234
LOCK/UNLOCK REQUESTING UNIT 235
STORAGE UNIT 230
30
CENTER SERVER
31
COMMUNICATION DEVICE
32
PROCESSING DEVICE
COMMUNICATION PROCESSING UNIT 321
CONDITION DETERMINATION UNIT 322
AUTHENTICATION KEY ISSUANCE UNIT 323
LOCATION INFORMATION MANAGEMENT UNIT 324
SCHEDULE MANAGEMENT UNIT 325
REGISTRATION MANAGEMENT UNIT 326
KEY SHARING MANAGEMENT UNIT 327
STORAGE UNIT 320

FIG. 4

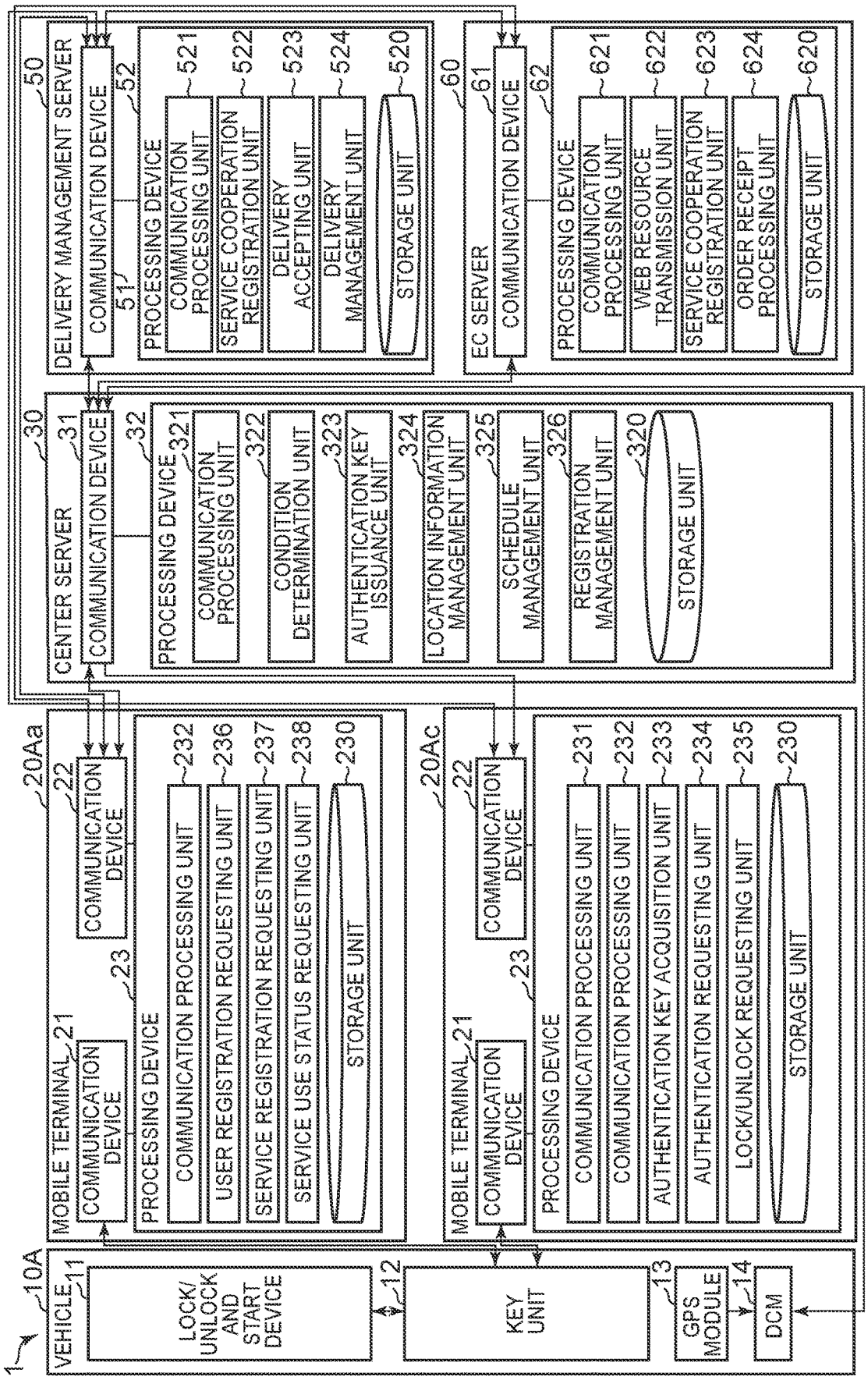
1
10A
VEHICLE
11
LOCK/UNLOCK AND START DEVICE
12
KEY UNIT
13
GPS MODULE
14
DCM
20Aa
MOBILE TERMINAL
21
COMMUNICATION DEVICE
22
23
PROCESSING DEVICE
232
COMMUNICATION PROCESSING UNIT
236
USER REGISTRATION REQUESTING UNIT
237
SERVICE REGISTRATION REQUESTING UNIT
238
SERVICE USE STATUS REQUESTING UNIT
230
STORAGE UNIT
20Ac
MOBILE TERMINAL
21
COMMUNICATION DEVICE
22
23
PROCESSING DEVICE
231
COMMUNICATION PROCESSING UNIT
232
COMMUNICATION PROCESSING UNIT
233
AUTHENTICATION KEY ACQUISITION UNIT
234
AUTHENTICATION REQUESTING UNIT
235
LOCK/UNLOCK REQUESTING UNIT
230
STORAGE UNIT
30
CENTER SERVER
31
COMMUNICATION DEVICE
32
PROCESSING DEVICE
321
COMMUNICATION PROCESSING UNIT
322
CONDITION DETERMINATION UNIT
323
AUTHENTICATION KEY ISSUANCE UNIT
324
LOCATION INFORMATION MANAGEMENT UNIT
325
SCHEDULE MANAGEMENT UNIT
326
REGISTRATION MANAGEMENT UNIT
320
STORAGE UNIT
50
DELIVERY MANAGEMENT SERVER
51
COMMUNICATION DEVICE
52
PROCESSING DEVICE
521
COMMUNICATION PROCESSING UNIT
522
SERVICE COOPERATION REGISTRATION UNIT
523
DELIVERY ACCEPTING UNIT
524
DELIVERY MANAGEMENT UNIT
520
STORAGE UNIT
60
EC SERVER
61
COMMUNICATION DEVICE
62
PROCESSING DEVICE
621
COMMUNICATION PROCESSING UNIT
622
WEB RESOURCE TRANSMISSION UNIT
623
SERVICE COOPERATION REGISTRATION UNIT
624
ORDER RECEIPT PROCESSING UNIT
620
STORAGE UNIT

FIG. 5

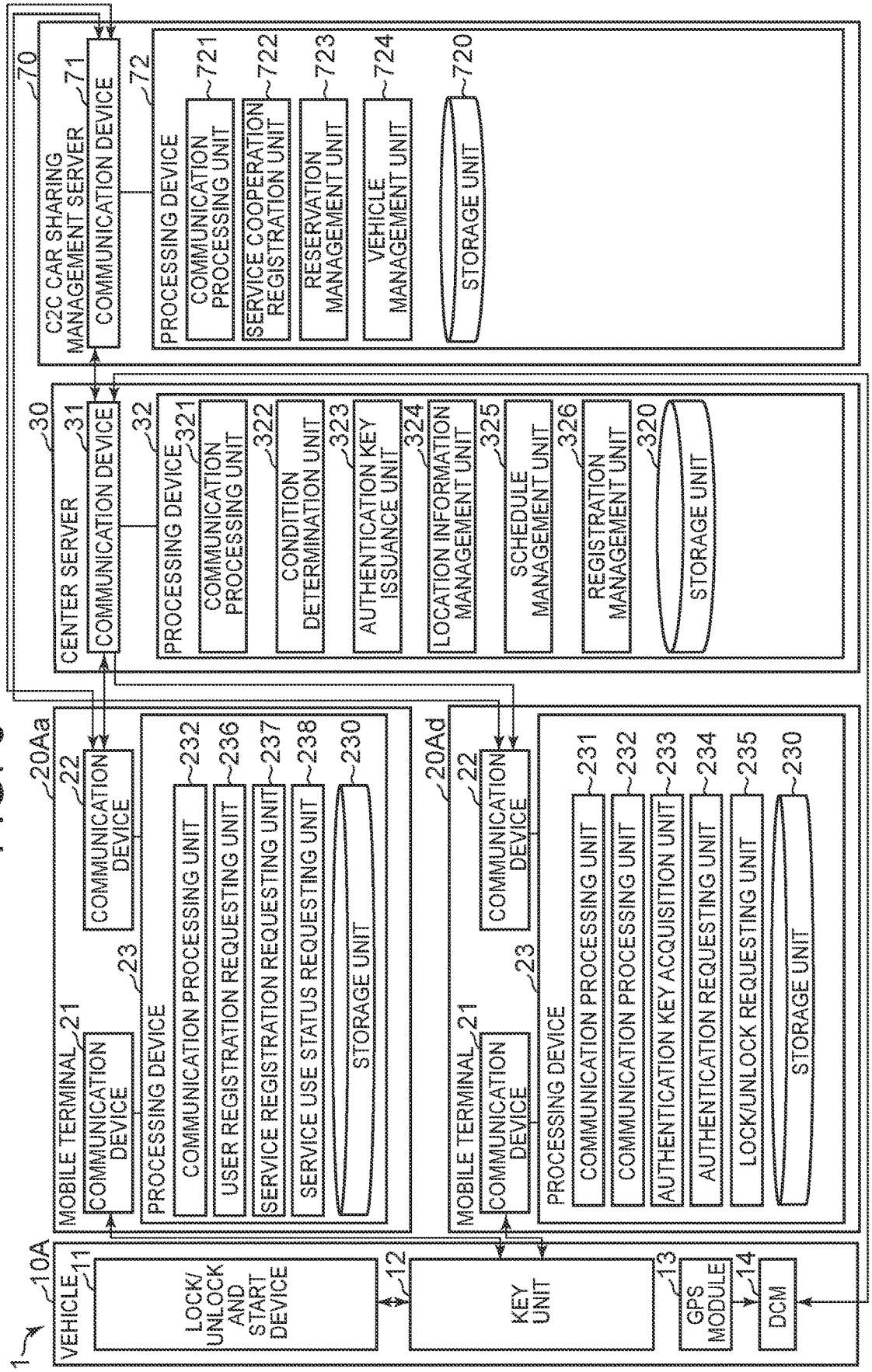
1
10A
VEHICLE
11
LOCK/UNLOCK AND START DEVICE
12
KEY UNIT
13
GPS MODULE
14
DCM
20Aa
MOBILE TERMINAL
21
COMMUNICATION DEVICE
22
COMMUNICATION DEVICE
23
PROCESSING DEVICE
232
COMMUNICATION PROCESSING UNIT
236
USER REGISTRATION REQUESTING UNIT
237
SERVICE REGISTRATION REQUESTING UNIT
238
SERVICE USE STATUS REQUESTING UNIT
230
STORAGE UNIT
20Ad
MOBILE TERMINAL
21
COMMUNICATION DEVICE
22
COMMUNICATION DEVICE
23
PROCESSING DEVICE
231
COMMUNICATION PROCESSING UNIT
232
COMMUNICATION PROCESSING UNIT
233
AUTHENTICATION KEY ACQUISITION UNIT
234
AUTHENTICATION REQUESTING UNIT
235
LOCK/UNLOCK REQUESTING UNIT
230
STORAGE UNIT
30
CENTER SERVER
31
COMMUNICATION DEVICE
32
PROCESSING DEVICE
321
COMMUNICATION PROCESSING UNIT
322
CONDITION DETERMINATION UNIT
323
AUTHENTICATION KEY ISSUANCE UNIT
324
LOCATION INFORMATION MANAGEMENT UNIT
325
SCHEDULE MANAGEMENT UNIT
326
REGISTRATION MANAGEMENT UNIT
320
STORAGE UNIT
70
C2C CAR SHARING MANAGEMENT SERVER
71
COMMUNICATION DEVICE
72
PROCESSING DEVICE
721
COMMUNICATION PROCESSING UNIT
722
SERVICE COOPERATION REGISTRATION UNIT
723
RESERVATION MANAGEMENT UNIT
724
VEHICLE MANAGEMENT UNIT
720
STORAGE UNIT

FIG. 6

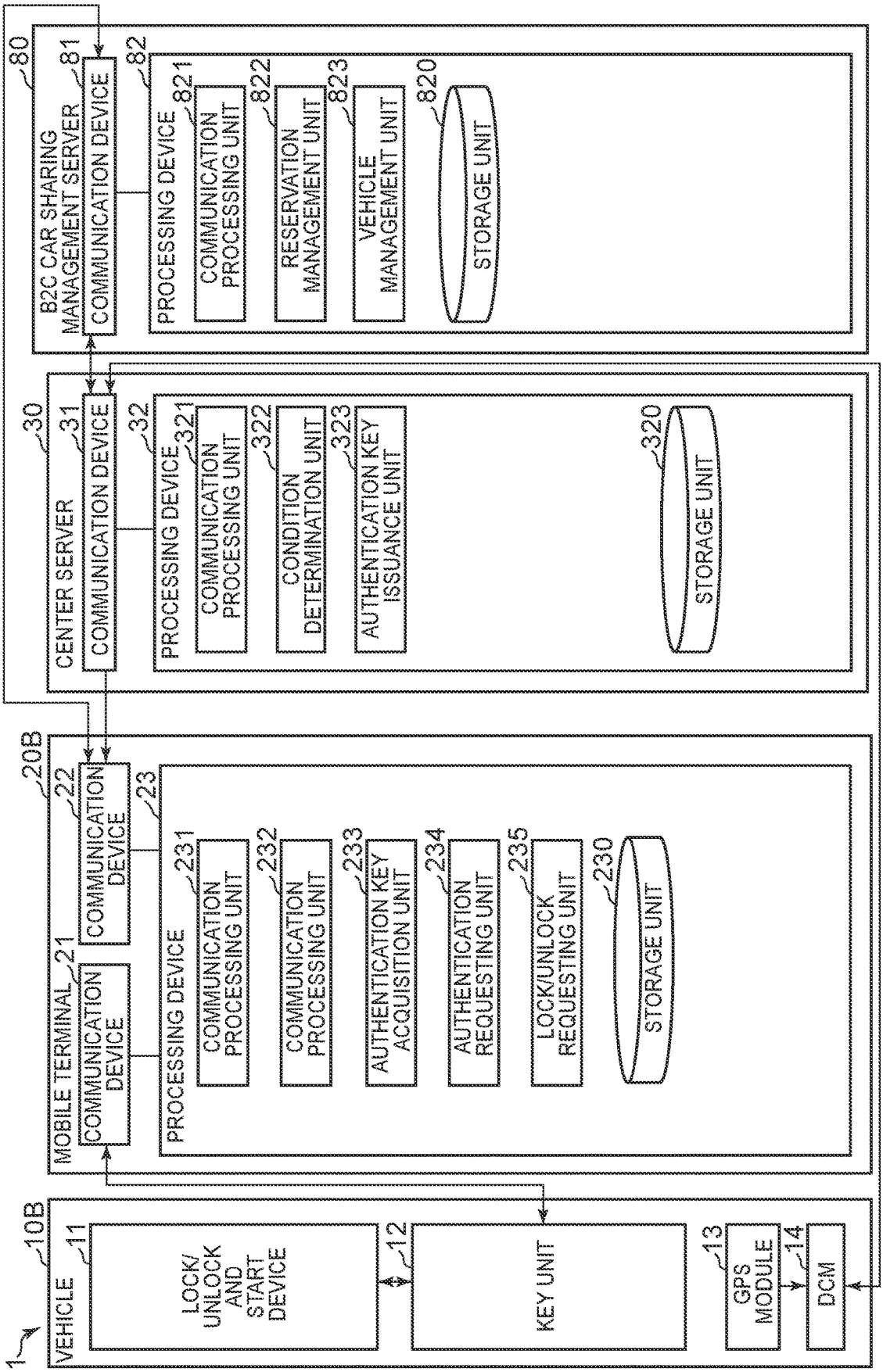
1
VEHICLE
10B
11
LOCK/ UNLOCK AND START DEVICE
12
KEY UNIT
13
GPS MODULE
14
DCM
MOBILE TERMINAL
20B
21
COMMUNICATION DEVICE
22
COMMUNICATION DEVICE
23
PROCESSING DEVICE
231
COMMUNICATION PROCESSING UNIT
232
COMMUNICATION PROCESSING UNIT
233
AUTHENTICATION KEY ACQUISITION UNIT
234
AUTHENTICATION REQUESTING UNIT
235
LOCK/UNLOCK REQUESTING UNIT
230
STORAGE UNIT
CENTER SERVER
30
31
COMMUNICATION DEVICE
32
PROCESSING DEVICE
321
COMMUNICATION PROCESSING UNIT
322
CONDITION DETERMINATION UNIT
323
AUTHENTICATION KEY ISSUANCE UNIT
320
STORAGE UNIT
B2C CAR SHARING MANAGEMENT SERVER
80
81
COMMUNICATION DEVICE
82
PROCESSING DEVICE
821
COMMUNICATION PROCESSING UNIT
822
RESERVATION MANAGEMENT UNIT
823
VEHICLE MANAGEMENT UNIT
820
STORAGE UNIT

FIG. 7

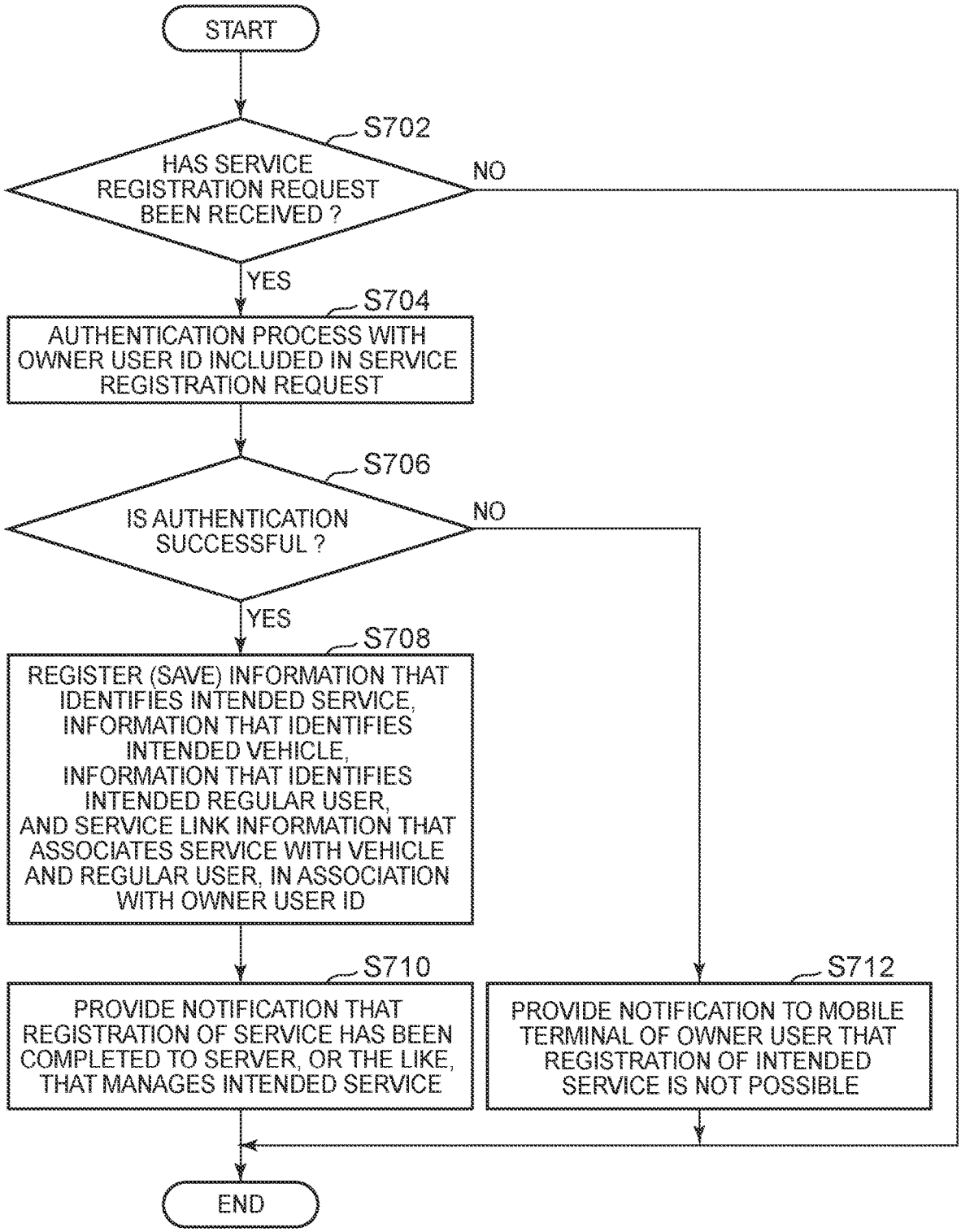
START
S702
HAS SERVICE REGISTRATION REQUEST BEEN RECEIVED ?
NO
YES
S704
AUTHENTICATION PROCESS WITH OWNER USER ID INCLUDED IN SERVICE REGISTRATION REQUEST
S706
IS AUTHENTICATION SUCCESSFUL ?
NO
YES
S708
REGISTER (SAVE) INFORMATION THAT IDENTIFIES INTENDED SERVICE, INFORMATION THAT IDENTIFIES INTENDED VEHICLE, INFORMATION THAT IDENTIFIES INTENDED REGULAR USER, AND SERVICE LINK INFORMATION THAT ASSOCIATES SERVICE WITH VEHICLE AND REGULAR USER, IN ASSOCIATION WITH OWNER USER ID
S710
PROVIDE NOTIFICATION THAT REGISTRATION OF SERVICE HAS BEEN COMPLETED TO SERVER, OR THE LIKE, THAT MANAGES INTENDED SERVICE
S712
PROVIDE NOTIFICATION TO MOBILE TERMINAL OF OWNER USER THAT REGISTRATION OF INTENDED SERVICE IS NOT POSSIBLE
END

FIG. 8

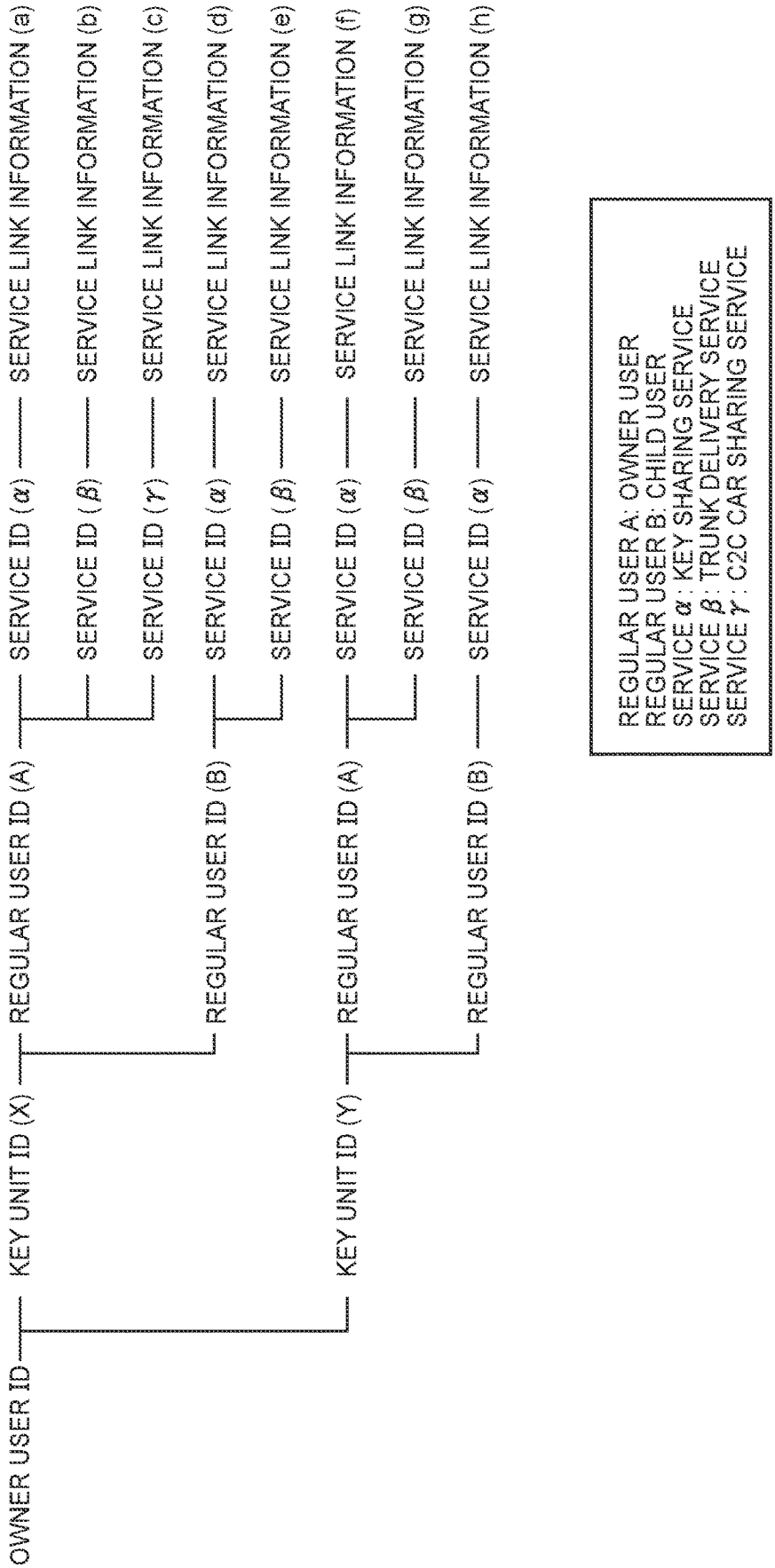
OWNER USER ID
KEY UNIT ID (X)
KEY UNIT ID (Y)
REGULAR USER ID (A)
REGULAR USER ID (B)
REGULAR USER ID (A)
REGULAR USER ID (B)
SERVICE ID (α)
SERVICE ID (β)
SERVICE ID (γ)
SERVICE ID (α)
SERVICE ID (β)
SERVICE ID (α)
SERVICE ID (β)
SERVICE ID (α)
SERVICE LINK INFORMATION (a)
SERVICE LINK INFORMATION (b)
SERVICE LINK INFORMATION (c)
SERVICE LINK INFORMATION (d)
SERVICE LINK INFORMATION (e)
SERVICE LINK INFORMATION (f)
SERVICE LINK INFORMATION (g)
SERVICE LINK INFORMATION (h)
REGULAR USER A: OWNER USER
REGULAR USER B: CHILD USER
SERVICE α: KEY SHARING SERVICE
SERVICE β: TRUNK DELIVERY SERVICE
SERVICE γ: C2C CAR SHARING SERVICE

FIG. 9

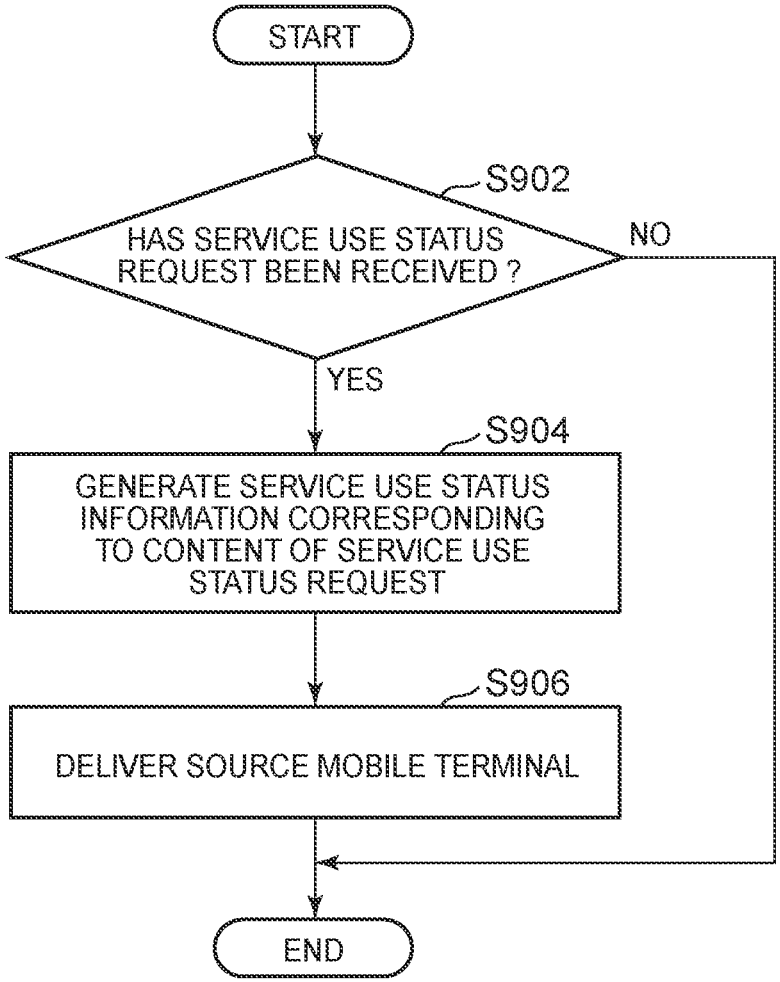
START
S902
HAS SERVICE USE STATUS REQUEST BEEN RECEIVED ?
NO
YES
S904
GENERATE SERVICE USE STATUS INFORMATION CORRESPONDING TO CONTENT OF SERVICE USE STATUS REQUEST
S906
DELIVER SOURCE MOBILE TERMINAL
END

FIG. 10

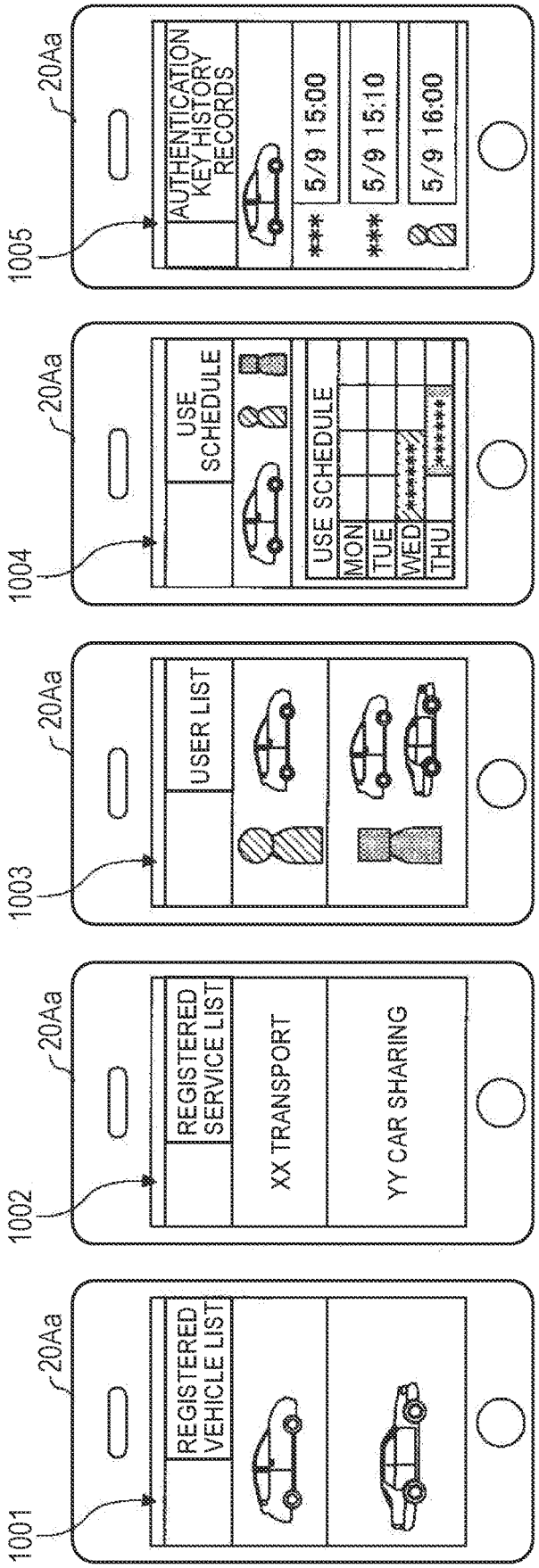
1001
20Aa
REGISTERED VEHICLE LIST
1002
20Aa
REGISTERED SERVICE LIST
XX TRANSPORT
YY CAR SHARING
1003
20Aa
USER LIST
1004
20Aa
USE SCHEDULE
USE SCHEDULE
MON
TUE
WED
THU
1005
20Aa
AUTHENTICATION KEY HISTORY RECORDS
*** 5/9 15:00
*** 5/9 15:10
5/9 16:00

KEY INFORMATION MANAGEMENT DEVICE, KEY INFORMATION MANAGEMENT METHOD, AND NON-TRANSITORY COMPUTER-READABLE RECORDING MEDIUM

INCORPORATION BY REFERENCE

The disclosure of Japanese Patent Application No. 2017-205675 filed on Oct. 24, 2017 including the specification, drawings and abstract is incorporated herein by reference in its entirety.

BACKGROUND

1. Technical Field

The disclosure relates to a key information management device, a key information management method, and a non-transitory computer-readable recording medium on which a key information management program is recorded.

2. Description of Related Art

For example, a key information management system is disclosed (see, for example, Japanese Unexamined Patent Application Publication No. 2006-118122 (JP 2006-118122 A). In the key information management system, a mobile terminal receives key information that is transmitted from a server, and then the mobile terminal is usable as an electronic key.

SUMMARY

When key information that allows a vehicle to be unlocked for a limited time is delivered to a mobile terminal of a person other than a regular user of the vehicle, it is conceivable that various services can be provided to the regular user of the vehicle. For example, there is a car sharing service that assists in renting a vehicle between individuals (consumer to consumer (C2C)) (hereinafter, referred to as C2C car sharing service). The C2C car sharing service is provided in the following way. In a time period during which a regular user does not use the vehicle, key information that allows a vehicle to be unlocked and started for a limited time is delivered to a mobile terminal of a person who wants to temporarily rent the vehicle. There is also, for example, a delivery service that allows the trunk of a vehicle to be designated as a delivery address for a package (hereinafter, referred to as trunk delivery service). The trunk delivery service is provided in the following way. Key information that allows the trunk of a vehicle to be unlocked for a limited time is delivered to a mobile terminal of a delivery person of a delivery company.

However, for example, if various services become available only by registering information for identifying a vehicle, such as a vehicle index number (VIN), with service providers, a third party, that is, a service provider, could learn registered information for identifying a vehicle when a regular user of the vehicle uses a service. For this reason, information for identifying a vehicle is possibly abused by a third party in bad faith, and another service is registered by the third party in bad faith without permission or a vehicle is used by the third party in bad faith without permission through a service registered without permission.

The disclosure provides a key information management device, a key information management method, and a non-transitory computer-readable recording medium on which a key information management program is recorded, which are able to prevent registration with a service using a vehicle by a third party in bad faith without permission and usage of a vehicle by a third party in bad faith without permission through a service registered without permission.

A first aspect of the disclosure provides a key information management device. The key information management device includes an information processing device. The information processing device is configured to deliver key information to a mobile terminal as the mobile terminal transmits a predetermined transmission signal toward a vehicle. The key information is information for unlocking the vehicle, starting the vehicle, or unlocking and starting the vehicle. The information processing device is configured to register permission for a user of the vehicle to use a predetermined service using the vehicle. The permission is permission to cause the information processing device to deliver the key information to a mobile terminal of a third party concerned with the predetermined service, other than the user of the vehicle, as an external device concerned with the predetermined service transmits a predetermined request signal.

According to the above aspect, the key information management device by itself is able to manage permission to cause an external device concerned with a service, such as a C2C car sharing service and a trunk delivery service, to deliver key information to a mobile terminal of a third party concerned with the service, such as a renter of a vehicle and a delivery person. For this reason, for example, even when authentication information, such as ID and password, that an external device causes the information processing device to deliver key information has leaked, since the ID and password is unique to a service, it is not possible to perform registration with a new service by using the authentication information. In addition, the key information management device normally often restricts access from a person other than a user of a vehicle, and it is originally difficult for a third party in bad faith to perform registration with a service with the use of the key information management device. Therefore, the key information management device is able to reduce registration with a service using a vehicle by a third party in bad faith without permission and usage of a vehicle by a third party in bad faith without permission through a service registered without permission.

In the above-described aspect, the information processing device may be configured to register the permission further in association with unique information corresponding to an owner user of the vehicle.

According to this aspect, the key information management device is able to manage permission to cause an external device to deliver key information to a mobile terminal of a third party concerned with a service, other than a user of a vehicle, further in association with unique information that corresponds to an owner user and that is normally only available to the owner user. Therefore, since unique information corresponding to an owner user is required at the time of registration with a service, the key information management device is able to reduce, for example, registration with a service using a vehicle by a user of the vehicle, other than an owner user, (for example, a member of a family of an owner user, a close friend of an owner user, or the like) without permission.

In the above-described aspect, the information processing device may be configured to transmit information related to the predetermined service to the mobile terminal having the unique information corresponding to the owner user in response to a request from the mobile terminal, and the

predetermined service may correspond to the permission associated with the unique information corresponding to the owner user.

According to this aspect, the key information management device is able to transmit information related to a registered service to a terminal of an owner user in response to a request from the terminal having unique information corresponding to the owner user, that is, a request from the terminal of the owner user. For this reason, an owner user is allowed to see information related to registered services (for example, a list of registered services, a use schedule of a vehicle that is used by the services, and the like) that are displayed on a display, or the like, of a terminal. Therefore, the key information management device is able to cause an owner user to monistically see information related to registered services.

In the above-described aspect, the information processing device may be configured to store the permission for each user of the vehicle in association with the unique information corresponding to the owner user, the information processing device may be configured to transmit information related to a user of the vehicle, other than the owner user, to the mobile terminal having the unique information corresponding to the owner user in response to a request from the mobile terminal, and the user of the vehicle, other than the owner user, may correspond to the permission associated with the unique information corresponding to the owner user.

According to this aspect, the key information management device is able to transmit information related to a user of a vehicle, other than an owner user, who uses a registered service to a terminal of the owner user in response to a request from the terminal of the owner user. For this reason, an owner user is allowed to see information related to users of a vehicle, other than the owner user, who use registered services (for example, a list of users of various services, a use schedule of a vehicle over all the users, and the like) that are displayed on a display, or the like, of a terminal. Therefore, the key information management device is able to cause an owner user to monistically see information related to users of registered services (users of a vehicle, other than the owner user).

A second aspect of the disclosure may be implemented by a key information management method that is executed by a key information management device. The key information management method includes: delivering key information to a mobile terminal as the mobile terminal transmits a predetermined transmission signal toward a vehicle, the key information being information for unlocking the vehicle, starting the vehicle, or unlocking and starting the vehicle; and registering permission for a user of the vehicle to use a predetermined service using the vehicle, the permission being permission to deliver the key information to a mobile terminal of a third party concerned with the predetermined service, other than the user of the vehicle, as an external device concerned with the predetermined service transmits a predetermined request signal.

A third aspect of the disclosure may be implemented by a non-transitory computer-readable recording medium on which a key information management program is recorded. The key information management program causes an information processing device to execute instructions for: delivering key information to a mobile terminal as the mobile terminal transmits a predetermined transmission signal toward a vehicle, the key information being information for unlocking the vehicle, starting the vehicle, or unlocking and starting the vehicle; and registering permission for a user of the vehicle to use a predetermined service using the vehicle, the permission being permission to deliver the key information to a mobile terminal of a third party concerned with the predetermined service, other than the user of the vehicle, as an external device concerned with the predetermined service transmits a predetermined request signal.

According to the above-described aspects, it is possible to provide a key information management device, a key information management method, and a non-transitory computer-readable recording medium on which a key information management program is recorded, which are able to prevent registration with a service using a vehicle by a third party in bad faith without permission and usage of a vehicle by a third party in bad faith without permission through a service registered without permission.

BRIEF DESCRIPTION OF THE DRAWINGS

Features, advantages, and technical and industrial significance of exemplary embodiments of the disclosure will be described below with reference to the accompanying drawings, in which like numerals denote like elements, and wherein:

FIG. **1** is a diagram that shows an example of the overall configuration of an authentication key management system;

FIG. **2** is a block diagram that mainly shows an example of components related to locking and unlocking of a vehicle in the authentication key management system;

FIG. **3** is a block diagram that mainly shows an example of components related to a key sharing service in the authentication key management system;

FIG. **4** is a block diagram that mainly shows an example of components related to a trunk delivery service in the authentication key management system;

FIG. **5** is a block diagram that mainly shows an example of components related to a C2C car sharing service in the authentication key management system;

FIG. **6** is a block diagram that mainly shows an example of components related to a B2C car sharing service in the authentication key management system;

FIG. **7** is a flowchart that schematically shows an example of a service registration process that is executed by a center server;

FIG. **8** is a view that schematically shows an example of a user and service registration information DB;

FIG. **9** is a flowchart that schematically shows an example of a service use status information providing process that is executed by the center server; and

FIG. **10** is a view that shows specific examples of service use status images that are displayed on a display of a mobile terminal of an owner user.

DETAILED DESCRIPTION OF EMBODIMENTS

Hereinafter, an embodiment of the disclosure will be described with reference to the accompanying drawings.

Overall Configuration of Authentication Key Management System

FIG. **1** is a diagram that shows an example of the overall configuration of an authentication key management system according to the present embodiment.

The authentication key management system **1** includes vehicles **10**, mobile terminals **20**, a center server **30**, and service management servers **40**.

Each vehicle **10** is able to carry out wireless communication within a relatively close range (a range to such an extent that communication is available between the inside of

a vehicle cabin and the outside of the vehicle cabin) to the mobile terminals **20** (hereinafter, referred to as near-field communication) in conformity with predetermined communication standards. Each vehicle **10** is an object of which doors are locked or unlocked and that is started (ignition is turned on) based on a transmission signal (an authentication request, a lock request, or an unlock request, which will be described later) from one of the mobile terminals **20**. The doors of each vehicle **10** may include not only passenger doors but also a luggage compartment door (for example, a trunk lid, a back door, or the like) for accessing a trunk (luggage compartment). Turning on the ignition (IG-ON) of each vehicle **10** may include not only startup of an engine in the vehicle **10** that uses the engine as a main power source but also power on of an electric motor in the vehicle **10** that uses an electric motor as a main power source. Hereinafter, in the present embodiment, description will be made on the assumption that each vehicle **10** uses an engine **117** (described later) as a main power source, a start (IG-ON) of each vehicle **10** corresponds to a startup of the engine **117** and a stop (IG-OFF) of each vehicle **10** corresponds to a stop of the engine **117**.

The vehicles **10** are communicably connected to the center server **30** through a predetermined communication network (for example, a mobile telephone network having a large number of base stations as terminals, the Internet, or the like). Each vehicle **10** transmits location information to the center server **30**, as will be described later.

The vehicles **10** include a privately-owned vehicle **10**A and a vehicle **10**B owned by a B2C car sharing service provider.

The mobile terminals **20** are communicably connected to the center server **30** through a predetermined communication network (for example, a mobile telephone network having a large number of base stations as terminals, the Internet, or the like). Each mobile terminal **20** is able to unlock or lock the intended vehicle **10** by acquiring authentication key information (an example of key information; hereinafter, referred to as authentication key) that is delivered from the center server **30** and transmitting the acquired authentication key by relatively close-range wireless communication in response to a predetermined operation of a user. Each mobile terminal **20** may be, for example, a general cellular phone, a smartphone, or a tablet terminal. Each mobile terminal **20** may implement the above-described function by launching a predetermined application program (hereinafter, referred to as key application) that is installed onto a built-in processing device **23**, as will be described later. Each mobile terminal **20** may be a portable special-purpose terminal specialized to acquire an authentication key from the center server **30**, and to unlock the doors of the intended vehicle **10** and start the intended vehicle **10** with the use of the acquired authentication key. The mobile terminals **20** include mobile terminals **20**Aa, **20**Ab, **20**Ac, **20**Ad corresponding to the vehicle **10**A, and a mobile terminal **20**B corresponding to the vehicle **10**B.

The mobile terminal **20**Aa is a mobile terminal owned by an owner (owner user) among regular users of the vehicle **10**A. The mobile terminal **20**Aa may be bidirectionally communicable with the mobile terminal **20**Ab by relatively close-range wireless communication.

The mobile terminal **20**Ab is a mobile terminal owned by each of the regular users other than the owner user of the vehicle **10**A (for example, including a member of a family of the owner user, a close friend of the owner user, and the like; hereinafter, referred to as child users).

The child users may include a user who does not drive the vehicle **10**A and a user who is not permitted to drive the vehicle **10**A (for example, a child under 18 years of age of the owner user, or the like). For example, when only a trunk delivery service (described later) is used, the regular users do not need to drive the vehicle **10**A.

The mobile terminal **20**Ac is owned by a delivery person of a business operator that provides a trunk delivery service (described later) (hereinafter, simply referred to as delivery service provider). The mobile terminal **20**Ac is communicably connected to the center server **30** and a delivery management server **50** (described later) through a predetermined communication network (for example, a mobile telephone network having a large number of base stations as terminals, the Internet, or the like).

The mobile terminal **20**Ad is a mobile terminal owned by a renter of the vehicle **10**A in a C2C car sharing service (described later). The mobile terminal **20**Ad is communicably connected to the center server **30** and a C2C car sharing management server **70** (described later) through a predetermined network (for example, a mobile telephone network having a large number of base stations as terminals, the Internet, or the like).

The mobile terminal **20**B is a mobile terminal owned by a renter of the vehicle **10**B in a B2C car sharing service (described later). The mobile terminal **20**B is communicably connected to the center server **30** and a B2C car sharing management server **80**) through a predetermined communication network (for example, a mobile telephone network having a large number of base stations as terminals, the Internet, or the like).

The center server **30** is communicably connected to the vehicles **10**, the mobile terminals **20**, and the service management servers **40**.

The center server **30** (an example of a key information management device) manages issuance of an authentication key of each vehicle **10**. For example, the center server **30** issues an authentication key and delivers the authentication key to the intended mobile terminal **20** in response to a predetermined condition.

The center server **30** also acquires location information of each vehicle **10** from the vehicle **10**. Thus, the center server **30** is able to get the location of each vehicle **10**.

The center server **30** also operates a car sharing service for sharing the vehicle **10**A among the plurality of regular users including the owner user of the vehicle **10**A. Specifically, the center server **30** operates an authentication key sharing service (key sharing service) that each of the registered regular users, including the owner user, is allowed to acquire the authentication key of the vehicle **10**A into his or her own mobile terminal **20** (the mobile terminal **20**Aa or the mobile terminal **20**Ab).

The center server **30** also executes a registration process for the regular users of the vehicle **10**A to use a service using the vehicle **10**A (the key sharing service, the trunk delivery service, the C2C car sharing service, or the like). Specifically, the center server **30** registers permission for the regular users of the vehicle **10**A to use a service using the vehicle **10**A. The permission is permission to deliver an authentication key to a predetermined mobile terminal **20** (hereinafter, referred to as authentication key arrangement permission) as one of a key sharing management unit **327** (described later) and the service management servers **40** transmits an authentication key arrangement request (described later) to the center server **30**.

The center server **30** also manages the use of the vehicle **10**A among a plurality of services (that is, a plurality of

business operators), such as the trunk delivery service (described later) and the C2C car sharing service (described later).

The service management servers **40** manage operations of various services that are provided by using the vehicles **10**. The service management servers **40** include the delivery management server **50** and an electronic commerce (EC) server **60** that correspond to the trunk delivery service, the C2C car sharing management server **70** that corresponds to the C2C car sharing service, and the B2C car sharing management server **80** that corresponds to the B2C car sharing service.

The trunk delivery service may include a delivery service for dealing with products ordered on an EC site (described later) as delivery items and a delivery service for dealing with items other than the products ordered on the EC site as delivery items. The latter trunk delivery service is, for example, a service that allows the regular users of the vehicle **10**A to change the delivery address to the trunk of the vehicle **10**A when a notification that a package addressed to home is scheduled to be delivered has been provided from the delivery management server **50** to the regular user through an electric mail, an account of a social networking service (SNS), or a specific application program that is launched on the mobile terminal **20**Aa or the mobile terminal **20**Ab. Hereinafter, in the present embodiment, the former trunk delivery service will be mainly described. The operations of components related to the trunk delivery service (described later) are also applicable to the operations of components related to the latter trunk delivery service where appropriate.

The delivery management server **50** is communicably connected to the mobile terminal **20**Ac and the center server **30** through a predetermined communication network. The delivery management server **50** manages operations of a logistics system associated with the trunk delivery service from receipt of a package to delivery of the package to the trunk of the vehicle **10**A.

The delivery service provider that operates the delivery management server **50** may provide the regular users of the vehicle **10**A with not only the trunk delivery service but also a pickup service that allows the trunk to be designated as a pickup address for a package (hereinafter, referred to as trunk pickup service). That is, the delivery management server **50** may manage operations of the trunk pickup service instead of or in addition to the trunk delivery service. In this case, a package that is a pickup item may be a product that is returned to an operator of the EC site (or a shop opened on the EC site) corresponding to the EC server **60** (that is, a product purchased on the EC site) or may be a package for delivery irrelevant to the EC site. The trunk pickup service may be realized as a pickup service at the time when a business operator that provides a service for temporarily keeping an article from a customer (for example, a business operator, such as a commercial laundry) picks up a package from the regular user of the vehicle **10**A. In this case, a pickup management server that manages operations of the trunk pickup service, which may be included in the service management servers **40**, as well as the delivery management server **50**, may be provided by a commercial laundry provider. That is, the pickup management server may be provided instead of or in addition to the delivery management server **50**. A business operator that provides a service for collecting a predetermined article (an article, such as junk and a second-hand book that a customer desires to sell) from a customer (for example, a recycle service provider, an antique buyer, or the like) provides the regular users of the vehicle **10**A with a collection service that allows the trunk to be designated as a collection address of an article that is a collection item (hereinafter, referred to as trunk collection service). In this case, a collection management server that manages operations of the trunk collection service, which may be included in the service management servers **40**, as well as the delivery management server **50**, may be provided by a recycle service provider, or the like. That is, the collection management server may be provided instead of or in addition to the delivery management server **50**.

The EC server **60** is communicably connected to the center server **30** and the delivery management server **50** through a predetermined communication network, and operates a predetermined website (EC site) that sells products or services. Specifically, the EC server **60** displays the trunk of the vehicle **10**A as a choice for delivery address on an order page of the EC site for the pre-registered regular users of the vehicle **10**A and the delivery service provider (the delivery service provider corresponding to the delivery management server **50**). Thus, the regular users of the vehicle **10**A are allowed to get delivery of purchased products to the trunk of the vehicle **10**A even when the regular users are not at home.

The C2C car sharing management server **70** is communicably connected to the mobile terminal **20**Ad and the center server **30**. The C2C car sharing management server **70** manages operations of the C2C car sharing service, such as receiving registration of a rentable date and time of the vehicle **10**A from the owner user, receiving a reservation for use from a person who wants to rent the vehicle **10**A, and arrangements for the authentication key of the vehicle **10**A. The C2C car sharing management server **70** may manage operations of a C2C trunk sharing service for renting the cabin or trunk of the privately-owned vehicle **10**A as a temporary luggage storage, a delivery address for a package, or the like.

The B2C car sharing management server **80** is communicably connected to the mobile terminal **20**B and the center server **30**. The B2C car sharing management server **80** manages operations of the B2C car sharing service, such as receiving a reservation for use of the vehicle **10**B and making arrangements for a parking location of the vehicle **10**B and the authentication key of the vehicle **10**B. The B2C car sharing management server **80** may manage operations of a B2C trunk sharing service for renting the cabin or trunk of the vehicle **10**B as a temporary luggage storage or a delivery address for a package.

The service management servers **40** may include a company car management server that operates a car sharing service (company car management service) that the vehicle **10** that is a company car of a company is intended for a reservation for use and an employee of the company is a borrower, instead of or in addition to the B2C car sharing management server **80**. At this time, when there is an idle time period of the vehicle **10** that is a company car, the company car management server may operate a C2C car sharing service that the vehicle **10** that is a company car is intended for rent. The delivery management server **50** and the EC server **60** may operate a trunk delivery service that allows the trunk of the vehicle **10** that is a company car of a company to be designated as a delivery address for a package that is delivered to the company.

Detailed Components Related to Locking and Unlocking of Vehicle and Starting of Vehicle

Next, components related to locking and unlocking of each vehicle **10** and starting of each vehicle **10** in the authentication key management system **1** will be described with reference to FIG. **2**.

FIG. **2** is a block diagram that mainly shows an example of components related to locking and unlocking of each vehicle **10** and starting of each vehicle **10** in the authentication key management system **1**. Each vehicle **10** includes a lock/unlock and start device **11**, a key unit **12**, a GPS module **13**, and a data communication module (DCM) **14**.

The lock/unlock and start device **11** is installed on the vehicle **10**, and locks or unlocks the doors of the vehicle **10** in response to a lock signal or unlock signal that is transmitted from the key unit **12** as radio waves of a radio-frequency (RF) band (for example, 300 MHz to 3 GHz) (hereinafter, referred to as RF radio waves). The lock/unlock and start device **11** starts the vehicle **10** in response to an exchange of radio waves of a low-frequency (LF) band (for example, 30 Hz to 300 kHz) (hereinafter, referred to as LF radio waves) and RF radio waves with the key unit **12** with a trigger set to a depressing operation of a start switch (not shown) provided in the cabin of the vehicle **10**. The lock/unlock and start device **11** includes an LF radio wave transmitter **111**, an RF radio wave receiver **112**, a collation electronic control unit (ECU) **113**, a body ECU **114**, door lock motors **115**, an engine ECU **116**, and the engine **117** that is a driving force source of the vehicle **10**.

The lock/unlock and start device **11** is activated by electric power that is supplied from an auxiliary battery (not shown) mounted on the vehicle **10**.

The LF radio wave transmitter **111** is incorporated in, for example, a center console or a door handle in the cabin, and transmits LF radio waves under control of the collation ECU **113**.

The RF radio wave receiver **112** is provided in, for example, a trim in the trunk of the vehicle **10**, and receives RF radio waves under control of the collation ECU **113**.

The collation ECU **113** is an electronic control unit that controls locking and unlocking of the doors of the vehicle **10** and starting of the vehicle **10** based on an exchange of signals with the key unit **12**. The collation ECU **113** is implemented by hardware, software, or a combination of hardware and software. For example, the collation ECU **113** is mainly formed of a microcomputer including a central processing unit (CPU), a random access memory (RAM), a read only memory (ROM), an auxiliary storage device, a real time clock (RTC), and a communication interface. The collation ECU **113** implements various control processes by executing various programs stored in the ROM or the auxiliary storage device on the CPU. Hereinafter, the same applies to a key ECU **124** (described later).

The collation ECU **113** receives an unlock signal and a lock signal that are transmitted from the key unit **12** as RF radio waves with the use of the RF radio wave receiver **112**.

When the collation ECU **113** has received the unlock signal or the lock signal, the collation ECU **113** authenticates the source (key unit **12**) of the unlock signal or lock signal based on key information (hereinafter, referred to as internal key information) included in the unlock signal or the lock signal. For example, when internal key information that is registered in advance in an internal memory, such as the auxiliary storage device, matches the internal key information included in the unlock signal or the lock signal, the collation ECU **113** determines that authentication is successful. On the other hand, when those pieces of internal key information do not match each other, the collation ECU **113** determines that authentication has failed.

For example, the collation ECU **113** may transmit LF radio waves, including "challenge" generated by a predetermined method by utilizing the internal key information of the internal memory, from the LF radio wave transmitter **111** toward the key unit **12**, and may perform challenge-response authentication based on "response" that has been returned from the key unit **12** and that is received by the RF radio wave receiver **112**.

When authentication is successful, the collation ECU **113** transmits an unlock instruction (upon reception of the unlock signal) or a lock instruction (upon reception of the lock signal) to the body ECU **114** through an in-vehicle network, such as a controller area network (CAN).

As will be described later, in the unlock signal, only part of the doors of the vehicle **10** may be designated as a door to be unlocked. In this case, the collation ECU **113** designates the door(s) to be unlocked with the unlock instruction. Thus, the body ECU **114** is able to unlock part of the doors by activating only the door lock motor(s) **115** corresponding to the designated part of the doors.

When the start switch has been depressed, the collation ECU **113** authenticates the key unit **12** by exchanging signals with the key unit **12** with the use of the LF radio wave transmitter **111** and the RF radio wave receiver **112**.

For example, the collation ECU **113** transmits an LF-band request signal for requesting a reply of the internal key information from the LF radio wave transmitter **111** toward the key unit **12**. When the response signal including the internal key information has been received from the key unit **12** by the RF radio wave receiver **112**, the collation ECU **113** determines whether authentication is successful or authentication has failed based on matching between the internal key information registered in the internal memory in advance and the internal key information included in the response signal, as in the case of locking or unlocking of the doors.

For example, the collation ECU **113** may perform challenge-response authentication, as in the case of locking or unlocking of the doors.

When authentication is successful, the collation ECU **113** transmits an instruction to start the engine **117** to the engine ECU **116** through the in-vehicle network, such as the CAN.

The body ECU **114** is an electronic control unit that controls actuation of each of the door lock motors **115** that are communicably connected to the body ECU **114** via one-to-one communication lines, or the like. The body ECU **114** outputs a control instruction to cause the door lock motors **115** to perform unlocking action in response to the unlock instruction from the collation ECU **113**. The body ECU **114** also outputs a control instruction to cause the door lock motors **115** to perform locking action in response to the lock instruction from the collation ECU **113**.

Each of the door lock motors **115** is a known electric actuator that unlocks or locks a corresponding one of the doors of the vehicle **10** in response to a control instruction from the body ECU **114**.

The engine ECU **116** is an electronic control unit that controls the drive of the engine **117**. Specifically, the engine ECU **116** controls the drive of various actuators, such as a starter and an injector, mounted on the engine **117**. When a start instruction has been input from the collation ECU **113**, the engine ECU **116** causes the engine **117** to start by outputting a control instruction to the various actuators, such as the starter and injector of the engine **117**.

The key unit **12** is disposed in the cabin of the vehicle **10**. The key unit **12** transmits any one of the unlock signal and the lock signal as RF radio waves to the lock/unlock and start device **11** in response to a corresponding one of the unlock request and the lock request, which is transmitted from the mobile terminal **20**. In addition, at the time when the start switch provided in the cabin of the vehicle **10** has

been depressed, the key unit **12** exchanges signals with the lock/unlock and start device **11** in response to an LF-band signal that is transmitted from the lock/unlock and start device **11**. The key unit **12** includes an LF radio wave receiver **121**, an RF radio wave transmitter **122**, a communication device **123**, and the key ECU **124**.

The key unit **12** may be disposed at a location at which the key unit **12** is difficult to be visually recognized from users seated on respective seats of the vehicle **10** (for example, inside a glove box or center console box, or the like). The key unit **12** may be fixed to the vehicle **10** or may be not fixed. The key unit **12** may be actuated by a built-in button battery, or the like, or may be actuated by electric power that is supplied from an auxiliary battery mounted on the vehicle **10**.

The LF radio wave receiver **121** receives LF radio waves under control of the key ECU **124**.

The RF radio wave transmitter **122** transmits RF radio waves under control of the key ECU **124**.

The communication device **123** is any device that carries out near-field communication with the mobile terminals **20** under control of the key ECU **124**. The communication device **123** may be, for example, a BLE communication module that carries out communication with the mobile terminals **20** in conformity with the BLE communication standards. The BLE is an abbreviation of Bluetooth low energy. Bluetooth is a registered trademark. Hereinafter, description will be made on the assumption that the communication standards employed in the communication device **123** adhere to BLE communication.

The communication device **123** may be a communication device that adheres to close-range communication standards for a significantly short communicable range, such as near-field communication (NFC) standards. In this case, the communication device **123** may be incorporated at a location close to a body surface outside the cabin of the vehicle **10** (that is, for example, a location inside a door handle). Thus, even when a communicable range of the communication device **123** is significantly short, the key unit **12** (key ECU **124**) is able to carry out communication with the mobile terminals **20** outside the cabin.

The key ECU **124** is an electronic control unit that executes a control process of transmitting any one of the lock signal and the unlock signal to the lock/unlock and start device **11** in response to a corresponding one of the lock request and the unlock request, which is received from the mobile terminal **20**.

The key ECU **124** receives an authentication request including an authentication key associated with the key unit **12** from the mobile terminal **20** through the communication device **123**.

When an authentication request including the authentication key associated with the key unit **12** has been received from the mobile terminal **20**, the key ECU **124** authenticates the mobile terminal **20** based on the authentication key. When the authentication is successful, the key ECU **124** reconstitutes the internal key information stored in the internal memory, such as the auxiliary storage device, into a usable state. The internal key information is stored in a state where the internal key information is not usable as a use for authentication in the lock/unlock and start device **11**, such as an inaccessible state and an encrypted state. For this reason, when authentication of the mobile terminal **20** is successful, the key ECU **124**, for example, changes access permission to the internal memory for changing the key information into an accessible state or decodes the encrypted internal key information based on the authentication key. Thus, the key ECU **124** is able to transmit an unlock signal or lock signal, including the internal key information, to the lock/unlock and start device **11** by accessing the normally inaccessible internal key information, or transmit an unlock signal or lock signal, including the decoded internal key information, to the lock/unlock and start device **11**. For this reason, the lock/unlock and start device **11** is able to perform appropriate authentication based on the internal key information included in the unlock signal or the lock signal. Even if there occurs a situation in which a third party in bad faith illegally gets hold of the key unit **12**, since the internal key information in the key unit **12** is, for example, inaccessible or encrypted, it is possible to reduce occurrence of a theft of the vehicle **10**.

The key ECU **124** also receives an unlock request and a lock request from the mobile terminal **20** through the communication device **123**. When authentication of the mobile terminal **20** is successful (specifically, after authentication of the mobile terminal **20** is successful, BLE communication is continuously established) and the key ECU **124** has received an unlock request or a lock request from the mobile terminal **20**, the key ECU **124** transmits an unlock signal or lock signal, including lock/unlock key information, to the lock/unlock and start device **11** through the RF radio wave transmitter **122**.

Thus, after an authentication process in the lock/unlock and start device **11**, the doors of the vehicle **10** are unlocked or locked.

As described above, at the time when the start switch provided in the cabin of the vehicle **10** has been depressed, the key ECU **124** exchanges signals with the lock/unlock and start device **11** in response to an LF-band signal that is transmitted from the lock/unlock and start device **11**.

For example, when the request signal has been received from the lock/unlock and start device **11** by the LF radio wave receiver **121**, the key ECU **124** transmits a response signal including the internal key information stored in the internal memory, or the like, toward the lock/unlock and start device **11** through the RF radio wave transmitter **122**.

For example, when LF radio waves including "challenge" have been received from the lock/unlock and start device **11** by the LF radio wave receiver **121**, the key ECU **124** generates "response" based on the internal key information, and transmits the "response" to the lock/unlock and start device **11** through the RF radio wave transmitter **122**.

Thus, after the authentication process in the lock/unlock and start device **11**, the engine **117** is started.

Permission related to the function of locking or unlocking the vehicle **10** or starting the vehicle **10** may be defined in the authentication key. The permission is assigned by the center server **30**.

For example, when the authentication key has the permission to unlock only part of the doors of the vehicle **10**, the key ECU **124** transmits an unlock signal, including information that designates the door(s) to be unlocked, to the key unit **12** through the RF radio wave transmitter **122**. Thus, as described above, only part of the doors of the vehicle **10** may be unlocked.

For example, when the authentication key has no permission to start the engine **117**, the key ECU **124** just needs to be configured not to exchange signals with the lock/unlock and start device **11** even when an LF-band signal from the lock/unlock and start device **11** based on a depressing operation of the start switch has been received by the LF radio wave receiver **121**. Thus, it is possible to prohibit start of the engine **117** in accordance with the permission of the authentication key.

The GPS module **13** receives GPS signals that are transmitted from three or more, desirably four or more satellites above the vehicle **10**, and measures the location of the vehicle **10**. The GPS module **13** is communicably connected to the DCM **14**, or the like, through the in-vehicle network, such as a one-to-one communication line and the CAN. The measured location information of the vehicle **10** is input to the DCM **14**, or the like.

The DCM **14** is a communication device that bidirectionally carries out communication with the center server **30** through a predetermined communication network. The DCM **14** transmits the current location information of the vehicle **10**, which is input from the GPS module **13**, to the center server **30** at prescribed timing or in response to a request, or the like, from the center server **30**. The DCM **14** transmits various pieces of vehicle information to the center server **30**. Examples of the various pieces of vehicle information include information that the doors of the vehicle **10** have been unlocked based on the authentication key or the vehicle **10** has been started based on the authentication key. The various pieces of vehicle information are acquired through the in-vehicle network, such as the CAN, at prescribed timing or in response to a request, or the like, from the center server **30**.

Each mobile terminal **20** includes a communication device **21**, a communication device **22**, a processing device **23**, and a touch panel display (hereinafter, simply referred to as display) **24**.

The communication device **21** is any device that carries out near-field communication with the vehicle **10** in accordance with the same communication standards as the communication device **123**. As described above, the communication device **21** is, for example, a BLE communication module in the case of the present embodiment.

The communication device **22** is any device that carries out communication with the center server **30**, the service management servers **40**, and the like, through a predetermined communication network. The communication device **22** is, for example, a mobile communication module that conforms to communication standards, such as long term evolution (LTE), 4th generation (4G) and 5th generation (5G).

The processing device **23** executes various control processes in the mobile terminal **20**. The functions of the processing device **23** may be implemented by hardware, software, or a combination of hardware and software. The processing device **23** includes, for example, a CPU, a RAM, a ROM, an auxiliary storage device, an RTC, various interfaces for communication, and the like. The processing device **23** includes, for example, a communication processing unit **231**, a communication processing unit **232**, an authentication key acquisition unit **233**, an authentication requesting unit **234**, and a lock/unlock requesting unit **235**, as functional units that are implemented by executing one or more programs stored in the ROM or the auxiliary storage device on the CPU. The processing device **23** also includes, for example, a storage unit **230** that is implemented as a storage area in the auxiliary storage device. A process of saving (storing) various data in the storage unit **230** is implemented by a predetermined program stored in the ROM or the auxiliary storage device.

The communication processing unit **231** bidirectionally carries out near-field communication with the key unit **12** with the use of the communication device **21**, and transmits or receives various signals.

The communication processing unit **232** establishes connection with a predetermined communication network with the use of the communication device **22**, and transmits or receives various signals, such as data signals and control signals, with the center server **30**, the service management servers **40**, and the like.

The authentication key acquisition unit **233**, for example, acquires an authentication key from the center server **30** and saves the acquired authentication key in the storage unit **230** in response to a predetermined operation of the user to a predetermined graphical user interface (GUI) that is displayed on the display **24**. Hereinafter, description will be made on the assumption that various operations to the mobile terminal **20** are made by operations to GUI that is displayed on the display **24** in synchronization with the operation of the key application.

For example, the authentication key acquisition unit **233** of the mobile terminal **20**Aa transmits an authentication key acquisition request to the center server **30** via the communication processing unit **232**. Thus, the center server **30** receives the authentication key acquisition request, and, when the center server **30** determines that the authentication key acquisition request is a regular authentication key acquisition request, issues an authentication key. The authentication key acquisition unit **233** acquires the authentication key that is delivered from the center server **30** via the communication processing unit **232**.

For example, the authentication key acquisition unit **233** of the mobile terminal **20**Ab acquires an authentication key that is delivered from the center server **30** to the mobile terminal **20**Ab via the communication processing unit **232** in response to a key sharing request (described later) that is transmitted from the mobile terminal **20**Aa to the center server **30**.

The authentication key acquisition unit **233** of the mobile terminal **20**Ab by itself may transmit an authentication key acquisition request to the center server **30** via the communication processing unit **232**. In this case, when the center server **30** has received the authentication key acquisition request from the mobile terminal **20**Ab, the center server **30** just needs to make an inquiry to the mobile terminal **20**Aa of the owner user about whether to allow delivery of the authentication key.

For example, the authentication key acquisition unit **233** of the mobile terminal **20**Ac transmits an authentication key acquisition request to acquire an authentication key to the delivery management server **50**. For example, the authentication key acquisition unit **233** of the mobile terminal **20**Ad transmits an authentication key acquisition request to acquire an authentication key to the C2C car sharing management server **70**. For example, the authentication key acquisition unit **233** of the mobile terminal **20**B transmits an authentication key acquisition request to acquire an authentication key to the B2C car sharing management server **80**. Thus, each of the delivery management server **50**, the C2C car sharing management server **70**, and the B2C car sharing management server **80** transmits an authentication key arrangement request to the center server **30** in response to reception of an authentication key acquisition request, and the center server **30** issues an authentication key in response to reception of the authentication key arrangement request. The authentication key acquisition unit **233** acquires the authentication key that is delivered from the center server **30** via the communication processing unit **232**.

The authentication key acquisition unit **233** of each of the mobile terminals **20**Ac, **20**Ad, **20**B may transmit an authentication key acquisition request to the center server **30** through the communication processing unit **232**. In this case, the center server **30** may determine whether the authentica-

tion key acquisition request is a regular authentication key acquisition request by making an inquiry to a corresponding one of the delivery management server **50**, the C2C car sharing management server **70**, and the B2C car sharing management server **80**.

The authentication requesting unit **234** transmits an authentication request to authenticate the mobile terminal **20** to the key unit **12** of the vehicle **10** via the communication processing unit **231**. The mobile terminal **20** serves as a remote operating unit for locking or unlocking the doors of the vehicle **10**. For example, when the authentication requesting unit **234** has found a key unit corresponding to an authentication key, specifically, when an advertising packet corresponding to the key unit **12** has been received by the communication processing unit **231**, the authentication requesting unit **234** may transmit an authentication request to the key unit **12**. For example, the authentication requesting unit **234** may transmit an authentication request to the key unit **12** in response to a predetermined operation of the user.

The lock/unlock requesting unit **235** transmits an unlock request including an authentication key or a lock request including an authentication key to the key unit **12** via the communication processing unit **231** in response to a predetermined operation of the user. Thus, even when an unlock request or a lock request has been transmitted to the key unit **12** before an authentication request is transmitted by the authentication requesting unit **234**, the doors of the vehicle **10** may be locked or unlocked based on the authentication process in the key unit **12**. For example, the GUI that is an operation screen of the display **24** may contain an unlock button for issuing a request to unlock the vehicle **10** and a lock button for issuing a request to lock the vehicle **10**, a lock request may be transmitted with the touch of the lock button, and an unlock request may be transmitted with the touch of the unlock button. A lock request and an unlock request may be transmitted as a result of an operation to a predetermined hardware operating unit provided in the mobile terminal **20**.

For example, the functions of the authentication key acquisition unit **233**, authentication requesting unit **234**, and lock/unlock requesting unit **235** may be configured to be available to the user by launching a predetermined application program that is installed on the ROM, auxiliary storage device, or the like, of the processing device **23**. Hereinafter, description will be made on the assumption that the functions of the authentication key acquisition unit **233**, authentication requesting unit **234**, and lock/unlock requesting unit **235** of the processing device **23** become available to the user by launching the key application installed on the processing device **23** (the auxiliary storage device or the ROM).

The center server **30** includes a communication device **31** and a processing device **32**.

The functions of the center server **30** may be implemented by a plurality of servers in a distributed manner. Hereinafter, this also applies to the delivery management server **50**, the EC server **60**, the C2C car sharing management server **70**, and the B2C car sharing management server **80**.

The communication device **31** is any device that bidirectionally carries out communication with each of the vehicles **10**, the mobile terminals **20**, and the service management servers **40** through a predetermined communication network.

The processing device **32** executes various control processes in the center server **30**. The functions of the processing device **32** may be implemented by hardware, software, or a combination of hardware and software. The processing device **32** is mainly formed of one or plurality of server computers each including, for example, a CPU, a RAM, a ROM, an auxiliary storage device, an RTC, a predetermined communication interface, and the like. Hereinafter, this also applies to a processing device **52** (described later) of the delivery management server **50**, a processing device **62** (described later) of the EC server **60**, a processing device **72** (described later) of the C2C car sharing management server **70**, and a processing device **82** (described later) of the B2C car sharing management server **80**. The processing device **32** includes, for example, a communication processing unit **321**, a condition determination unit **322**, and an authentication key issuance unit **323** as functional units that are implemented by executing one or more programs saved in the ROM or the auxiliary storage device on the CPU. The processing device **32** also includes, for example, a storage unit **320** that is implemented as a storage area defined in the auxiliary storage device of the corresponding server computer, an external storage device that is connected to the corresponding server computer, or other storage devices. A process of saving (storing) various data in the storage unit **320** is implemented by a program stored in the ROM or the auxiliary storage device. Hereinafter, this also applies to storage units **520**, **620**, **720**, **820** (described later).

The communication processing unit **321** controls the communication device **31**, and exchanges various signals, such as control signals and information signals, with each of the vehicles **10**, the mobile terminals **20**, and the service management servers **40**.

The condition determination unit **322** determines whether an authentication key acquisition request is a regular authentication key acquisition request in response to reception of the authentication key acquisition request, received by the communication processing unit **321**, from the mobile terminal **20**. The condition determination unit **322** also determines whether an authentication key arrangement request is a regular authentication key arrangement request in response to reception of the authentication key arrangement request from any one of the service management servers **40**.

When the condition determination unit **322** determines that the authentication key acquisition request is a regular authentication key acquisition request or determines that the authentication key arrangement request is a regular authentication key arrangement request, the authentication key issuance unit **323** (an example of a key information delivery unit) identifies the specifications of an authentication key to be issued, and issues an authentication key corresponding to the identified specifications. For example, the authentication key issuance unit **323** identifies the vehicle **10** intended to be locked or unlocked with an authentication key or identifies the key unit **12**, or the like, corresponding to the intended vehicle **10**. For example, the authentication key issuance unit **323** also identifies the permission of the authentication key on an effective (available) period of the authentication key and the number of times the authentication key is available. For example, the authentication key issuance unit **323** also identifies the permission of the authentication key for unlocking the vehicle **10** or starting the vehicle **10**, such as which door is allowed to be locked or unlocked and whether the vehicle **10** is allowed to be started. For example, the authentication key issuance unit **323** also identifies the permission of the authentication key on temporary key sharing, such as whether the authentication key is allowed to be shared with another one of the mobile terminals **20** through temporary key sharing (described later), a period during which the authentication key is allowed to be shared with another one of the mobile terminals **20**, and the number

of times the authentication key is allowed to be shared with another one of the mobile terminals **20**. Hereinafter, the permission of the authentication key on an available period, the available number of times, and the like, the permission of the authentication key for unlocking the vehicle **10** or starting the vehicle **10**, and the permission of the authentication key on temporary key sharing are collectively simply referred to as various types of permission of the authentication key. The authentication key issuance unit **323** delivers the authentication key issued for the intended mobile terminal **20** via the communication processing unit **321**.

Details of Components Related to Key Sharing Service

Next, components related to the key sharing service in the authentication key management system **1** will be described with reference to FIG. **3**.

FIG. **3** is a block diagram that mainly shows an example of components related to the key sharing service in the authentication key management system **1**. Hereinafter, for FIG. **3**, components related to the key sharing service in the authentication key management system **1** will be mainly described, and the overlap description of components that overlap with the above-described components related to locking and unlocking of the vehicle **10** and starting of the vehicle **10** is omitted as much as possible. Hereinafter, the same applies to the description of FIG. **4** to FIG. **6**.

As described above, the processing device **23** of the mobile terminal **20**Aa owned by the owner user of the vehicle **10**A includes the communication processing unit **231**, the communication processing unit **232**, the authentication key acquisition unit **233**, the authentication requesting unit **234**, and the lock/unlock requesting unit **235**. The processing device **23** of the mobile terminal **20**Aa further includes a user registration requesting unit **236**, a service registration requesting unit **237**, a service use status requesting unit **238**, and a key sharing requesting unit **239**.

In the present embodiment, description will be made on the assumption that the functions of the user registration requesting unit **236**, service registration requesting unit **237**, service use status requesting unit **238** and key sharing requesting unit **239** of the mobile terminal **20**Aa become available to the owner user when the key application is launched and user authentication based on bidirectional communication with the center server **30** is successful. Description will be made on the assumption that the user authentication is performed on the center server **30** based on an ID prescribed for the owner user (hereinafter, referred to as owner user ID) and a password corresponding to the owner user ID.

The user registration requesting unit **236** requests registration of a regular user of the vehicle **10**A, who uses various services using the vehicle **10**A (the key sharing service, the trunk delivery service, and the C2C car sharing service), to the center server **30** in response to a predetermined operation of the owner user. For example, the user registration requesting unit **236** transmits a user registration request including the owner user ID, the password, and attribute information that identifies a child user to be registered (for example, a name, an age, a relation with the owner user, and the like) to the center server **30** via the communication processing unit **232**.

When a notification that registration of the child user has completed (user registration completion notification) has been received from the center server **30** by the communication processing unit **232**, the user registration requesting unit **236** saves an ID of the child user (hereinafter, referred to as child user ID) and a password, included in the user registration completion notification, in the storage unit **230**. At this time, the user registration requesting unit **236** may transmit the child user ID and the password to the mobile terminal **20**Ab owned by the registered child user via the communication processing unit **231** in response to a predetermined operation of the owner user.

The service registration requesting unit **237** requests registration of the regular users of the vehicle **10**A with various services using the vehicle **10**A to the center server **30** in response to a predetermined operation of the owner user. That is, as described above, the service registration requesting unit **237** requests registration of authentication key arrangement permission of the key sharing management unit **327** and service management servers **40** corresponding to various services, for the regular users of the vehicle **10**A to use the various services. For example, the service registration requesting unit **237** transmits the owner user ID, the password, information that identifies the vehicle **10**A that is used in various services, information that identifies an intended service, and a service registration request including the ID of the regular user who uses the intended service (the owner user ID or the child user ID) to the center server **30** via the communication processing unit **232**. Hereinafter, the owner user ID and the child user ID may be collectively referred to as regular user IDs. Thus, the service registration requesting unit **237** is able to register a child user who uses the key sharing service in the center server **30**.

The service registration requesting unit **237** receives a notification that registration with a service based on the service registration request has completed from at least one of the center server **30** and the service management servers **40** with the use of the communication processing unit **232**. The service registration requesting unit **237** causes the display **24** to display the fact that registration of the regular user of the vehicle **10**A with a specific service based on a predetermined operation of the owner user has completed. Thus, the owner user is informed of the fact that registration of the regular user with the specific service has completed.

The service use status requesting unit **238** requests information related to the use statuses of various services, including the key sharing service, with which the regular user of the vehicle **10**A has registered in association with the owner user ID (service use status information), to the center server **30** in response to a predetermined operation of the owner user. For example, the service use status requesting unit **238** transmits a service use status request including the owner user ID and the password to the center server **30** via the communication processing unit **232**. When the service use status information has been received from the center server **30** by the communication processing unit **232**, the service use status requesting unit **238** displays the service use status information on the display **24**. Thus, the owner user is able to monistically see information related to the use statuses of various services with which the regular users register in the center server **30** in association with the owner user ID.

The key sharing requesting unit **239** requests delivery of an authentication key for locking or unlocking the vehicle **10**A or starting the vehicle **10**A to the child user registered with the key sharing service, to the center server **30** in response to a predetermined operation of the owner user. For example, the key sharing requesting unit **239** transmits a key sharing request to the center server **30** via the communication processing unit **232**. The key sharing request includes the owner user ID, the password, information related to the vehicle **10**A to be locked or unlocked with the use of the authentication key, information related to the intended child user to deliver (share) the authentication key to (for example, the child user ID). At this time, the key sharing

request may include use period information related to an available period of the authentication key to be delivered (for example, a use start date and time, a use end date and time, or the like), which is set by a predetermined operation of the owner user. The key sharing request may also include permission information related to various types of permission of authentication keys, which may be designated in response to a predetermined operation of the owner user. The various types of permission of the authentication keys include the permission of an authentication key on an available period, the available number of times, or the like, the permission of an authentication key for unlocking the vehicle or starting the vehicle, the permission of an authentication key on temporary key sharing (described later), and the like. Thus, as will be described later, when the owner user sets appropriate permission information in the case where an authentication key available at the same time is shared between the plurality of mobile terminals **20**, usage of the vehicle **10**A by a user other than the owner user is able to be limited. For this reason, it is possible to improve the security of the vehicle **10**A.

The key sharing requesting unit **239** may request delivery of authentication keys of which available periods conflict with each other to the center server **30** in response to a predetermined operation of the owner user while the mobile terminals **20** (that is, each of which is at least one of the mobile terminals **20**Aa, **20**Ab) of the plurality of regular users of the vehicle **10**A are set for delivery destinations. That is, in the key sharing request, a plurality of regular users to which authentication keys are delivered may be designated, and the plurality of regular users may include the owner user. In the key sharing request, available periods of authentication keys for a plurality of regular users to be designated may conflict with each other. Thus, an authentication key of the vehicle **10**A available at the same time may be shared between the plurality of regular users. For this reason, for example, when two or more persons get on the vehicle **10**A and go on a trip or go camping, each of the passengers is allowed to, for example, lock or unlock the vehicle **10**A without lending or borrowing the mobile terminal **20** in which the authentication key is saved, so it is possible to improve convenience of the users.

The key sharing requesting unit **239** may share the already delivered authentication key with another one of the mobile terminals **20** (that is, the mobile terminal **20** onto which the key application is installed) in response to a predetermined operation of the owner user (hereinafter, a manner of sharing the authentication key is referred to as temporary key sharing). At this time, another one of the mobile terminals **20** may be the mobile terminal **20**Ab of the child user or may be the mobile terminal **20** of a user other than the child user, that is, a user who temporarily uses the vehicle **10**A.

For example, the key sharing requesting unit **239** transmits the authentication key (specifically, a copy of the authentication key) to another one of the mobile terminals **20** through the communication processing unit **231**. Thus, even when two or more persons suddenly decide to get on the vehicle **10**A to go on a trip, or the like, the owner user of the vehicle **10**A is allowed to share the authentication key with another user. In addition, the mobile terminal **20**Aa is directly able to share the authentication key available to another one of the mobile terminals **20** at the same time. For this reason, for example, even when the mobile terminal **20**Aa is located in a place of a poor communication condition in a wireless mobile communication network or outside a communication range, the owner user of the vehicle **10**A is allowed to share the authentication key with another user.

At this time, the key sharing requesting unit **239** may transmit an authentication key to another one of the mobile terminals **20** through the communication processing unit **231**, and the authentication key has limited permission of the authentication key on an available period or the available number of times or limited permission for unlocking the vehicle **10**A or starting the vehicle **10**A. Each time of permission is set based on a predetermined operation of the owner user or defined in advance. Specifically, for example, an authentication key with permission that limits an available period to 30 minutes, or the like, or that limits the available number of times to once, or the like, or an authentication key with permission that limits doors to be locked or unlocked to doors for getting on or off the vehicle **10**A only or that prohibits the vehicle **10**A from starting may be transmitted to another one of the mobile terminals **20**. Hereinafter, this also applies to the case of temporary key sharing that is performed via the center server **30**. Thus, it is possible to improve the security of the vehicle **10**A in temporary key sharing.

When temporary key sharing is performed, the key sharing requesting unit **239** may cause the center server **30** to deliver an authentication key to another one of the mobile terminals **20** as in the case of normal key sharing. At this time, the key sharing requesting unit **239** may cause the center server **30** to deliver the authentication key of the vehicle **10**A to another one of the mobile terminals **20** by transmitting a temporary key sharing request, including information that identifies the delivered authentication key (for example, an issued ID embedded in the authentication key, or the like) and information that designates another one of the mobile terminals **20** as a delivery destination, to the center server **30** through the communication processing unit **232**.

For example, when another one of the mobile terminals **20** is the mobile terminal **20**Ab of the child user, the key sharing requesting unit **239** may transmit a temporary key sharing request including the child user ID to the center server **30** through the communication processing unit **232**.

For example, the key sharing requesting unit **239** also acquires predetermined identification information (for example, a QR code (registered trademark) corresponding to the user of another one of the mobile terminals **20**, who is registered in the center server **30** as an installed user of the key application) from the another one of the mobile terminals **20** through the communication processing unit **231**, or the like. The key sharing requesting unit **239** may transmit a temporary key sharing request that designates another one of the mobile terminals **20**, which is identified based on the identification information, as a delivery destination to the center server **30**.

The mobile terminal **20**Aa may acquire the identification information with another method. For example, the mobile terminal **20**Aa may acquire identification information corresponding to the user of another one of the mobile terminals **20** by recognizing identification information that is displayed on the display **24** of the another one of the mobile terminals **20** with the use of an onboard camera function. For example, the mobile terminal **20**Aa may also acquire identification information transmitted from the user of another one of the mobile terminals **20** to a mail address or SNS account of the owner user.

For example, the key sharing requesting unit **239** also transmits a candidate terminal information request to the center server **30** through the communication processing unit **232** in response to a predetermined operation of the owner user. The candidate terminal information request is to

request candidate terminal information related to a candidate terminal that is a candidate of another one of the mobile terminals **20** and that is located around a current location of the mobile terminal **20**Aa. When the candidate terminal information has been received from the center server **30** by the communication processing unit **232**, the key sharing requesting unit **239** also causes the display **24** to display the candidate terminal information. At this time, the candidate terminal information that is returned from the center server **30** may include information that identifies a candidate terminal on which a specific operation or action is being performed among the candidate terminals. Thus, the owner user of the vehicle **10**A is allowed to identify another one of the mobile terminals **20**, intended for key sharing, from among the candidate terminals that are displayed on the display **24** of the mobile terminal **20**Aa as the user of the another one of the mobile terminals **20** performs a specific operation or action on the another one of the mobile terminals **20**. The key sharing requesting unit **239** may transmit a temporary key sharing request that designates the another one of the mobile terminals **20**, identified from among the candidate terminals, as a delivery destination to the center server **30** in response to a predetermined operation of the owner user.

The key sharing requesting unit **239** may also transmit link information based on a uniform resource locator (URL) scheme for launching the key application and causing another one of the mobile terminals **20** to acquire an authentication key from the center server **30** (hereinafter, simply referred to as link information) to a mail address or SNS account of the user of the another one of the mobile terminals **20** through the communication processing unit **232** in response to a predetermined operation of the owner user. At this time, the key sharing requesting unit **239** transmits a temporary key sharing request that designates the acquired authentication key to the center server **30** through the communication processing unit **232** in response to a predetermined operation of the owner user, and acquires link information that is returned from the center server **30** in response to the temporary key sharing request. Thus, the key sharing requesting unit **239** is able to deliver an authentication key from the center server **30** to another one of the mobile terminals **20**.

Temporary key sharing may be configured to be executable from the mobile terminal **20**Ab of the child user, to which the authentication key has been already delivered. That is, the functions of the key sharing requesting unit **239**, related to temporary key sharing, may be included in the functions of the key application that is installed onto the processing device **23** of the mobile terminal **20**Ab of the child user. Thus, even in the case where two or more persons except the owner user get on the vehicle **10**A, it is not necessary to lend or borrow the mobile terminal **20**Ab of the child user who has already acquired the authentication key among the two or more persons, so it is possible to further improve the convenience of the child user of the vehicle **10**A. Hereinafter, description will be made on the assumption that temporary key sharing is available from the mobile terminal **20**Ab of the child user.

As described above, the processing device **32** of the center server **30** includes the communication processing unit **321**, the condition determination unit **322**, the authentication key issuance unit **323**, and the storage unit **320**. The processing device **32** (an example of an information processing device) of the center server **30** includes, for example, a location information management unit **324**, a schedule management unit **325**, a registration management unit **326**, and the key sharing management unit **327** as functional units that are implemented by executing one or more programs stored in the ROM or the auxiliary storage device on the CPU.

When the communication processing unit **321** has received an authentication key acquisition request from any one of the mobile terminals **20**Aa, **20**Ab, the condition determination unit **322** performs authentication based on the regular user ID and the password, included in the authentication key acquisition request. For example, the condition determination unit **322** compares the regular user ID and password registered in the storage unit **320** with the regular user ID and password included in the authentication key acquisition request. When the registered regular user ID and password match the regular user ID and password included in the authentication key acquisition request, the condition determination unit **322** determines that authentication is successful, that is, the authentication key acquisition request is a regular authentication key acquisition request.

The condition determination unit **322** also determines whether an authentication key arrangement request that is transferred from the key sharing management unit **327** (described later) is a regular authentication key arrangement request. For example, when authentication is successful based on authentication information (for example, the ID and the password) included in the authentication key arrangement request from the key sharing management unit **327**, the condition determination unit **322** may determine that the authentication key arrangement request is a regular authentication key arrangement request.

When the condition determination unit **322** determines that the authentication key acquisition request is a regular authentication key acquisition request or the authentication key arrangement request is a regular authentication key arrangement request, the authentication key issuance unit **323** issues an authentication key, and delivers the authentication key to the intended mobile terminal **20** through the communication processing unit **321**.

The location information management unit **324** acquires location information from the vehicle **10**A via the communication processing unit **321**, and keeps track of a travel status of the vehicle **10**A by monitoring the location information of the vehicle **10**A in real time. Thus, for example, the location information management unit **324** is able to inform the owner user of the location information of the vehicle **10**A lent to the child user via the communication processing unit **321**. For example, the location information management unit **324** is able to inform the mobile terminal **20**Ab of the child user of information, such as whether the vehicle **10**A scheduled to be lent to the child user is heading toward a designated location (home, or the like) and how long does it take to get to the designated location, via the communication processing unit **321**.

The schedule management unit **325** manages the use of the vehicle **10**A in various services. For example, the schedule management unit **325** periodically acquires a use schedule of the vehicle **10**A in the key sharing service, specifically, information related to an available date and time of the authentication key that is delivered by the key sharing service, from the key sharing management unit **327**. The schedule management unit **325** also acquires a use schedule of the vehicle **10**A in each of the trunk delivery service and the C2C car sharing service from the delivery management server **50** and the C2C car sharing management server **70** via the communication processing unit **321**. The schedule management unit **325** generates information related to a use schedule of the vehicle **10**A over a plurality of services (vehicle use schedule information) based on the acquired use

schedule of the vehicle **10**A in the various services, and updates old vehicle use schedule information saved in the storage unit **320**.

The registration management unit **326** registers the regular user (child user) who uses various services in response to a user registration request that is received from the mobile terminal **20**Aa of the owner user by the communication processing unit **321**. For example, the registration management unit **326** compares the owner user ID and password included in the user registration request from the mobile terminal **20**Aa with the owner user ID and password saved in the storage unit **320**. When the owner user ID and password included in the user registration request match the saved owner user ID and password, the registration management unit **326** determines that the user registration request is a regular user registration request, that is, authentication is successful. The registration management unit **326** registers the child user ID included in the regular user registration request in a user and service registration information database (DB) in the storage unit **320** as a regular user who is allowed to use various services.

The registration management unit **326** (an example of a registration unit) registers the regular user of the vehicle **10**A with various services in response to a service registration request that is received from the mobile terminal **20**Aa of the owner user by the communication processing unit **321**. That is, the registration management unit **326** registers authentication key arrangement permission of the key sharing management unit **327** and service management servers **40** corresponding to various services in response to the service registration request. The authentication key arrangement permission is permission for the user of the vehicle **10**A to use the various services. For example, the registration management unit **326** determines whether the service registration request is a regular service registration request by executing an authentication process similar to the above-described process based on the owner user ID and password included in the service registration request from the mobile terminal **20**Aa. When the service registration request is a regular service registration request, the registration management unit **326** also determines whether the regular user ID included in the service registration request has been already registered in the user and service registration information DB. When the regular user ID included in the service registration request has been already registered in the user and service registration information DB, the registration management unit **326** registers an intended service, which is identified by the service registration request, in the user and service registration information DB in the storage unit **320** as a service available to the regular user corresponding to the regular user ID.

Specifically, the registration management unit **326** constructs the user and service registration information DB that associates service unique information, vehicle unique information, the regular user ID, and service link information with the owner user ID. The service unique information identifies an intended service. The vehicle unique information identifies the vehicle **10**A. The regular user ID identifies the regular user who uses a service. The service link information associates the vehicle unique information and the regular user ID, corresponding to the vehicle **10**A, with the intended service.

The service unique information is, for example, a service ID that is defined for each service. Specifically, for example, when there is a plurality of business operators that provide the C2C car sharing service, a service ID unique to each of the business providers is defined. For example, when the same business operator provides a plurality of C2C car sharing services, an ID unique to each of the services that the same business operator provides is defined. When the trunk delivery service is provided by a combination between a plurality of delivery service providers and a plurality of EC business operators, a unique service ID may be defined for each combination of a delivery service provider and an EC business operator, or an intended service may be identified by a combination of a unique service ID that is defined for each of a plurality of delivery service providers and a unique service ID that is defined for each of the plurality of EC business operators.

The vehicle unique information may be any information as long as the vehicle unique information is able to identify the vehicle **10**A to be locked or unlocked or to be started with an authentication key. The vehicle unique information may be, for example, identification information, such as a vehicle ID and a VIN, that is defined for each vehicle **10**A. The vehicle unique information may be, for example, identification information, such as a key unit ID, that is defined for each in-vehicle device, such as the key unit **12**, that is related to locking or unlocking of doors or starting of the vehicle **10**A based on an authentication key and that is mounted on the vehicle **10**A. Hereinafter, description will be made on the assumption that the vehicle unique information is a key unit ID.

The service link information is information that is required to cause the authentication key issuance unit **323** to issue an authentication key and deliver the authentication key to the intended mobile terminal **20** as any one of the key sharing management unit **327**, the delivery management server **50** and EC server **60**, and the C2C car sharing management server **70** that respectively manage various services transmits an authentication key arrangement request. That is, the authentication key issuance unit **323** is able to identify the vehicle **10**A to be locked or unlocked or to be started with an authentication key and issue an appropriate authentication key by receiving an authentication key arrangement request including service link information from any one of the key sharing management unit **327**, the delivery management server **50** and EC server **60**, and the C2C car sharing management server **70**.

The service link information may be any information as long as the service link information is able to associate an intended service with the vehicle **10**A and a user who uses the service in the center server **30**. Examples of the service link information may include a login ID of a regular user on each of user-oriented websites for various services corresponding to the key sharing management unit **327**, the delivery management server **50**, the EC server **60**, and the C2C car sharing management server **70** (hereinafter, referred to as service login ID for the sake of convenience). In this case, the service registration requesting unit **237** of the mobile terminal **20**Aa transmits a service registration request including the service login IDs of a regular user to be registered, corresponding to various services, to the center server **30** via the communication processing unit **232**. When a regular user to be registered has not acquired service login IDs corresponding to various services yet, the processing device **23** of the mobile terminal **20**Aa may launch a predetermined browser and cause the regular user to acquire service login IDs of the websites for the various services. Thus, when a user (a regular user of the vehicle **10**A) logs onto a web site at the time of requesting an intended service, the delivery management server **50** or the C2C car sharing management server **70** is able to find a service login ID corresponding to service link information

and easily arrange for an authentication key related to provision of the service. Hereinafter, description will be made on the assumption that the service link information related to the trunk delivery service and the C2C car sharing service is the above-described service login ID.

In the case of a regular user who regularly uses the plurality of vehicles **10**A, the center server **30** is able to identify the regular user but is not able to identify the vehicle **10**A with only the service login ID. For this reason, the service link information includes not only a service login ID but also information for indirectly identifying the vehicle **10**A (for example, information obtained by encrypting vehicle unique information in a predetermined manner, or the like).

When the registration management unit **326** has completed registration with various services, the registration management unit **326** provides a notification of the completion to the mobile terminal **20**Aa or the mobile terminal **20**Ab, corresponding to a regular user to be registered, via the communication processing unit **321**. When the registration management unit **326** has completed registration with various services, the registration management unit **326** also provides a service registration completion notification including service link information to any one of the key sharing management unit **327** and the service management servers **40**, which manages operations of the registered service.

A notification of completion of registration with various services to the mobile terminal **20**Aa or the mobile terminal **20**Ab may be transmitted from any one of the service management servers **40**, which has received a service registration completion notification.

When the communication processing unit **321** has received a service use status request from the mobile terminal **20**Aa, the registration management unit **326** generates service use status information based on the user and service registration information DB of the storage unit **320**, the vehicle use schedule information that is managed by the schedule management unit **325**, and the like, and delivers the service use status information to the mobile terminal **20**Aa via the communication processing unit **321**.

The key sharing management unit **327** manages operations of the key sharing service.

For example, the key sharing management unit **327** arranges for an authentication key to the mobile terminal **20**Aa or mobile terminal **20**Ab corresponding to a regular user ID that is designated by a key sharing request in response to the key sharing request that is received from the mobile terminal **20**Aa of the owner user by the communication processing unit **321**. Specifically, the key sharing management unit **327** compares the owner user ID and password included in the key sharing request with the owner user ID and password saved in the storage unit **320**. When the owner user ID and password included in the key sharing request match the saved owner user ID and password, the key sharing management unit **327** determines that the key sharing request is a regular key sharing request. The key sharing management unit **327** also makes an inquiry to the schedule management unit **325**, and determines whether there is inconsistency between use period information included in the key sharing request and the latest vehicle use schedule information, that is, whether there is a date and time conflict in relation to usage of the vehicle **10**A among a plurality of services, and a plurality of regular users. When there is no date and time conflict, the key sharing management unit **327** transfers an authentication key arrangement request to the authentication key issuance unit **323**. The authentication key arrangement request includes information related to a regular user and the vehicle **10**A, and permission information, which are identified from information included in the key sharing request. The regular user corresponds to the mobile terminal **20**Aa or the mobile terminal **20**Ab, which is a delivery destination of an authentication key. The vehicle **10**A is to be locked or unlocked or to be started with the authentication key. The permission information includes information about an available period of the intended mobile terminal **20**Aa or mobile terminal **20**Ab, the number of times the intended mobile terminal **20**Aa or mobile terminal **20**Ab is available, unlockable doors of the intended mobile terminal **20**Aa or mobile terminal **20**Ab, whether the intended mobile terminal **20**Aa or mobile terminal **20**Ab is allowed to start the vehicle **10**A, and the like. Thus, the authentication key issuance unit **323** is able to identify the regular user ID corresponding to the mobile terminal **20**Aa or mobile terminal **20**Ab, which is a delivery destination of an authentication key, and the vehicle **10**A to be locked or unlocked or to be started with an authentication key, and issue an appropriate authentication key.

The key sharing management unit **327** also checks, for example, attribute information (for example, an age, whether the user has a driver's license, and the like) of the user of the mobile terminal **20**Aa or mobile terminal **20**Ab, which is a delivery destination of an authentication key and which is designated by the key sharing request. The attribute information is stored in the storage unit **320**. When the user of the mobile terminal **20**Aa or mobile terminal **20**Ab, which is a delivery destination of an authentication key (the regular user of the vehicle **10**A), is a user that is determined not to be able to drive the vehicle **10**A, the key sharing management unit **327** issues an authentication key, with permission not allowing the user to start the vehicle **10**A, to the mobile terminal **20** of the user. Examples of the user who is not allowed to drive the vehicle **10**A include a user who has not reached a minimum driving age for a driver's license, and a user who has no driver's license. Specifically, the key sharing management unit **327** transfers an authentication key arrangement request to the authentication key issuance unit **323**, and the authentication key arrangement request includes permission information that corresponds to the mobile terminal **20**Aa or mobile terminal **20**Ab, corresponding to the user who is determined to be not allowed to drive the vehicle **10**A, and that includes an instruction to prohibit the vehicle **10**A from starting. Thus, since the authentication key issuance unit **323** is able to deliver an authentication key with permission to prohibit the vehicle **10**A from starting, to the mobile terminal **20**Aa or mobile terminal **20**Ab of the user who is not allowed to drive the vehicle **10**A, it is possible to improve the security of the vehicle **10**A in the key sharing service.

For example, the key sharing management unit **327** delivers the authentication key of the vehicle **10**A to another one of the mobile terminals **20**, designated by the temporary key sharing request, based on the temporary key sharing request that is received from the mobile terminal **20**Aa of the owner user by the communication processing unit **321**. Specifically, the key sharing management unit **327** identifies an ID of an installed user (hereinafter, referred to as installed user ID) corresponding to another one of the mobile terminals **20**, which is a delivery destination, based on an installed user information DB of the key application, stored in the storage unit **320**. The key sharing management unit **327** transfers the authentication key arrangement request including the identified installed user ID and information corresponding to the

authentication key designated by the temporary key sharing request (for example, an issued ID of the authentication key included in the temporary key sharing request, or the like) to the authentication key issuance unit **323**. Thus, the authentication key issuance unit **323** is able to identify another one of the mobile terminals **20**, which is a delivery destination, based on the installed user ID, the issued ID of the authentication key, and the like, and deliver the authentication key to the another one of the mobile terminals **20** via the communication processing unit **321**.

The functions of the key sharing management unit **327** may be transferred to a server outside the center server **30** (key sharing management server), as well as the other services using the vehicle **10**A. The key sharing management server may be included in the service management servers **40**.

As described above, the mobile terminal **20**Ab owned by the child user includes the communication processing unit **231**, the communication processing unit **232**, the authentication key acquisition unit **233**, the authentication requesting unit **234**, the lock/unlock requesting unit **235**, and the storage unit **230**.

In the present embodiment, description will be made on the assumption that the function of the authentication key acquisition unit **233** of the mobile terminal **20**Ab becomes available to the child user as the key application is launched and user authentication based on bidirectional communication with the center server **30** is successful. Description will be made on the assumption that the user authentication is performed on the center server **30** based on the child user ID and the password. Description will be made on the assumption that the functions of the authentication requesting unit **234**, lock/unlock requesting unit **235**, and the like, of the mobile terminal **20**Ab become available to the child user as the key application is launched.

As described above, the authentication key acquisition unit **233** acquires an authentication key that is delivered from the center server **30** in response to a key sharing request that is transmitted from the mobile terminal **20**Aa to the center server **30** via the communication processing unit **232**. Thus, the mobile terminal **20**Ab is able to lock or unlock the doors of the vehicle **10**A and start the vehicle **10**A based on the functions of the communication processing unit **231**, authentication requesting unit **234** and lock/unlock requesting unit **235**. That is, with the key sharing service, the child user who owns the mobile terminal **20**Ab is allowed to directly use the vehicle **10**A, for example, lock or unlock the vehicle **10**A or drive the vehicle **10**, with the use of the mobile terminal **20**Ab without handing over a key to or from the owner user. Similarly, the owner user is allowed to lend the vehicle **10**A to the child user without handing over a key to or from the child user. For this reason, it is possible to improve convenience in lending or borrowing the vehicle **10**A between the owner user and child user of the vehicle **10**A with the key sharing service in the authentication key management system **1**.

As described above, the authentication key acquisition unit **233** acquires an authentication key that is delivered from the center server **30** in response to a temporary key sharing request that is transmitted from the mobile terminal **20**Aa to the center server **30** via the communication processing unit **232**. This also applies to the case where an authentication key is delivered to the mobile terminal **20** other than the mobile terminal **20**Ab of the child user in response to a temporary key sharing request. Thus, the other mobile terminals **20** including the mobile terminal **20**Ab are able to lock or unlock the doors of the vehicle **10**A or start the vehicle **10**A based on the functions of the communication processing unit **231**, authentication requesting unit **234** and lock/unlock requesting unit **235**. That is, for example, when two or more persons including another regular user get on the vehicle **10**A and go out, and even when the child user who owns the mobile terminal **20**Ab has not acquired an authentication key in advance, the child user is not required to borrow the mobile terminal **20**Aa or mobile terminal **20**Ab to which the authentication key has been delivered, and is allowed to directly use the vehicle **10**A, for example, lock or unlock the vehicle **10**A or drive the vehicle **10**A, with the use of the mobile terminal **20**Ab. Similarly, even when the owner user has not made the mobile terminal **20**Ab of the child user acquire an authentication key in advance, the owner user does not need to lend the own mobile terminal **20**Aa to the child user. For this reason, it is possible to improve the convenience of users in the case where two or more persons including a regular user of the vehicle **10**A get on the vehicle **10**A and use the vehicle **10**A with temporary key sharing in the authentication key management system **1**.

Details of Components Related to Trunk Delivery Service

Next, components related to the trunk delivery service in the authentication key management system **1** will be described with reference to FIG. **4**.

FIG. **4** is a block diagram that mainly shows an example of components related to the trunk delivery service in the authentication key management system **1**. Hereinafter, for FIG. **4**, components related to the trunk delivery service in the authentication key management system **1** will be mainly described, and the overlap description of components that overlap with the components related to the above-described key sharing service is omitted as much as possible.

As described above, the processing device **23** of the mobile terminal **20**Aa owned by the owner user of the vehicle **10**A includes the communication processing unit **232**, the user registration requesting unit **236**, the service registration requesting unit **237**, and the service use status requesting unit **238**.

As described above, the user registration requesting unit **236** requests registration of the regular user (child user) of the vehicle **10**A, who uses various services including the trunk delivery service, to the center server **30** in response to a predetermined operation of the owner user.

As described above, the service registration requesting unit **237** requests registration of each registered regular user (the owner user or the child user) with various services including the trunk delivery service to the center server **30** in response to a predetermined operation of the owner user.

For example, the service registration requesting unit **237** transmits a service registration request for using the trunk delivery service to the center server **30**. The service registration request includes a service login ID of a website for users who use the service of the delivery management server **50** (hereinafter, referred to as delivery site) and a service login ID of an EC site as service link information. The service login IDs correspond to the regular user of the vehicle **10**A, who is to be registered.

As described above, the service use status requesting unit **238** requests information related to the use statuses of various services, including the trunk delivery service, by the regular users of the vehicle **10**A, who have been registered in association with the owner user ID (service use status information), to the center server **30** in response to a predetermined operation of the owner user.

The delivery management server **50** includes a communication device **51** and the processing device **52**.

The communication device **51** is any device that bidirectionally carries out communication with each of the mobile terminals **20**, the center server **30**, and the EC server **60** through a predetermined communication network.

The processing device **52** includes, for example, a communication processing unit **521**, a service cooperation registration unit **522**, a delivery accepting unit **523**, and a delivery management unit **524** as functional units that are implemented by executing one or more programs stored in the ROM or the auxiliary storage device on the CPU. The processing device **52** also includes the storage unit **520** that is implemented as a storage area, such as the auxiliary storage device of the server computer.

The communication processing unit **521** controls the communication device **51**, and exchanges various signals, such as control signals and information signals, with each of the mobile terminals **20**, the center server **30**, and the EC server **60**.

The service cooperation registration unit **522** registers information for cooperation between the center server **30** and the delivery management server **50**, related to usage of the trunk delivery service by the regular users of the vehicle **10**A, in response to a service registration completion notification that is received from the center server **30** by the communication processing unit **521**.

For example, the service cooperation registration unit **522** adds a flag to a service login ID (service link information) included in a service registration completion notification in a user management DB for managing users on the delivery site constructed in the storage unit **520**. The flag indicates that the user corresponding to the service login ID is a user of the trunk delivery service. At the same time, the service cooperation registration unit **522** registers the service login ID included in the service registration completion notification in the user management DB of the storage unit **520** in association with a service login ID of the web site corresponding to the EC server **60** (that is, EC site). The service login ID of the EC site is included in the service registration completion notification. Thus, when an order including a service login ID has been received from the EC server **60** by the communication processing unit **521**, the delivery management server **50** is able to identify the corresponding service login ID of the delivery site. The delivery management server **50** is able to cause the center server **30** to deliver an authentication key to the mobile terminal **20**Ac of a delivery person, as will be described later, by transmitting an authentication key arrangement request including the identified service login ID to the center server **30**.

The delivery accepting unit **523** receives information related to a request to deliver a package (delivery request information), including the service login ID of the EC site, from the EC server **60** via the communication processing unit **521**. The service login ID corresponds to an orderer of a product on the EC site. The delivery request information that is received from the EC server **60** includes not only basic information, such as a name, address and telephone number of an orderer of a delivery address but also information related to a designated delivery address (delivery address information), information related to a designated delivery date and time (delivery date and time information), and the like.

The delivery management unit **524** manages operations of processes from receipt to delivery related to a delivery request received by the delivery accepting unit **523**.

For example, as the delivery management unit **524** receives a notification that a package has arrived at a sales office that is in charge of a parking location of the vehicle **10**A designated by the delivery address information of a delivery request, the delivery management unit **524** determines a date and time of departure for delivery of the package, a delivery person in charge, and the like, in accordance with the designated delivery time period.

Subsequently, the delivery management unit **524** makes an inquiry about the location information of the vehicle **10**A to the center server **30** via the communication processing unit **521** before departure of the package (for example, 10 minutes before scheduled departure time). At this time, the inquiry includes a service login ID (that is, service link information) of the regular user of the vehicle **10**A on the delivery site. The regular user of the vehicle **10**A is a user of the trunk delivery service. This also applies to an inquiry about location information (described later). The delivery management unit **524** acquires the current location information of the vehicle **10**A from the center server **30** via the communication processing unit **521**, and determines whether delivery is possible based on matching with the designated parking location, a relationship with an area in charge, and the like.

Subsequently, when the delivery management unit **524** determines that the package is deliverable, the delivery management unit **524** transmits a notification that the package is deliverable to the trunk of the vehicle **10**A (deliverable notification), to the mobile terminal **20**Ac of a delivery person via the communication processing unit **521**.

Subsequently, as the communication processing unit **521** receives an authentication key acquisition request from the mobile terminal **20**Ac that has received the deliverable notification, the delivery management unit **524** determines whether the authentication key acquisition request is a regular authentication key acquisition request. Specifically, the delivery management unit **524** may carry out the determination by comparing information related to a package to be delivered (hereinafter, delivery item information for the sake of convenience) with various pieces of information related to the package, registered in the storage unit **520**. The delivery item information includes, for example, a delivery person, a delivery address (for example, a name or legal name of a recipient, or the like), the type of the package, a delivery time period, and a delivery place, which may be included in the authentication key acquisition request, As the delivery management unit **524** determines that the authentication key acquisition request is a regular authentication key acquisition request, the delivery management unit **524** transmits an authentication key arrangement request to the center server **30** via the communication processing unit **521**. At this time, the authentication key arrangement request includes information for identifying the mobile terminal **20**Ac of the delivery person. The information for identifying a delivery person may be, for example, an authentication ID for a delivery person to get user authentication in the center server **30** in order to use the functions of the key application, corresponding to the authentication key acquisition unit **233**, and the like, of the mobile terminal **20**Ac (hereinafter, referred to as delivery person ID for the sake of convenience). Thus, the mobile terminal **20**Ac of the delivery person is able to acquire an authentication key from the center server **30**.

Subsequently, as the delivery management unit **524** receives an inquiry about the current location information of the vehicle **10**A from the mobile terminal **20**Ac of the delivery person who has left for delivery from a sales office via the communication processing unit **521**, the delivery management unit **524** makes an inquiry about the current location information of the vehicle **10**A to the center server

30. The delivery management unit **524** acquires the current location information of the vehicle **10**A from the center server **30** via the communication processing unit **521**, and transmits (forwards) the current location information of the vehicle **10**A to the mobile terminal **20**Ac of the delivery person. Thus, the on-the-road delivery person is allowed to compare the current location information of the vehicle **10**A with the information related to the parking location of the vehicle **10**A, designated by the delivery address information, and determine whether to deliver the package or bring back the package.

Lastly, as the delivery management unit **524** receives a delivery end notification that is received from the mobile terminal **20**Ac of the delivery person who has finished delivery of the package via the communication processing unit **521**, the delivery management unit **524** basically ends management of operations related to the trunk delivery service for the package. At this time, the delivery management unit **524** may provide a notification of end of delivery to the regular user of the vehicle **10**A, who is a client (a purchaser of a product on the EC site) through an electric mail or a predetermined application that runs in cooperation with the delivery site and that is installed onto the mobile terminal **20**Aa or the mobile terminal **20**Ab.

As described above, when a door (trunk lid, or the like) for accessing the trunk of the vehicle **10**A is unlocked and then locked, the DCM **14** of the vehicle **10**A may determine that the delivery person has finished delivery, and may provide a notification of end of delivery to the center server **30**. Thus, when the center server **30** has received the notification, the center server **30** is allowed to transmit a delivery end notification to the delivery management server **50**. That is, the delivery end notification may be transmitted from the center server **30** to the delivery management server **50**.

The EC server **60** includes a communication device **61** and the processing device **62**.

The communication device **61** is any device that bidirectionally carries out communication with each of the mobile terminals **20**, the center server **30**, and the delivery management server **50** through a predetermined communication network.

The processing device **62** includes, for example, a communication processing unit **621**, a web resource transmission unit **622**, a service cooperation registration unit **623**, and an order receipt processing unit **624** as functional units that are implemented by executing one or more programs stored in the ROM or the auxiliary storage device on the CPU. The processing device **62** also includes the storage unit **620** that is implemented as a storage area, such as the auxiliary storage device of the server computer.

The communication processing unit **621** controls the communication device **61**, and exchanges various signals, such as control signals and information signals, with each of the mobile terminals **20**, the center server **30**, and the delivery management server **50**.

The web resource transmission unit **622** transmits resources to a browser of any one of terminals in a predetermined manner based on various pieces of information. The resources correspond to webpages to be displayed on a browser of the any one of the terminals of users who browse the EC site. The various pieces of information are resources of the EC site, and are saved in the storage unit **620**. The terminals of the users include the mobile terminals **20**Aa, **20**Ab. The webpages that may be displayed on the EC site include a top page of the EC site, webpages corresponding to individual products that are carried on the EC site, an order input page that a user inputs various pieces of information at the time of ordering individual products, and the like. For example, the web resource transmission unit **622** transmits hypertext markup language (HTML) documents corresponding to the webpages and information under the HTML documents, such as images and moving images, to be displayed on the webpages, in parallel with each other.

The service cooperation registration unit **623** registers information for cooperation between the center server **30** and the EC server **60**, related to usage of the trunk delivery service by the regular users of the vehicle **10**A, in response to a service registration completion notification that is received from the center server **30** by the communication processing unit **621**. For example, the service cooperation registration unit **623** adds a flag to a service login ID included in the service registration completion notification in the user management DB for managing users on the EC site constructed in the storage unit **620**. The flag indicates that the user corresponding to the service login ID is a user of the trunk delivery service. At the same time, the service cooperation registration unit **623** registers the service login ID included in the service registration completion notification in the user management DB in association with a service login ID of the web site (that is, delivery site) corresponding to the delivery management server **50**. The service login ID of the delivery site is included in the service registration completion notification. Thus, for example, when the communication processing unit **621** has received an inquiry, or the like, about an ordered product, including the service login ID of the delivery site, from the delivery management server **50**, the EC server **60** is able to identify the corresponding service login ID of the EC site.

The order receipt processing unit **624** receives an order of a product from a user based on various input operations corresponding to the order of the product from the user on the EC site. At this time, when the trunk of the vehicle **10**A has been selected as a delivery address on an order input page on the EC site, the order receipt processing unit **624** makes an inquiry about vehicle use schedule information to the center server **30** via the communication processing unit **621**. Thus, the order receipt processing unit **624** is able to acquire the latest vehicle use schedule information via the communication processing unit **621**, so, for example, when a designated delivery date and time already conflicts with another schedule, the order receipt processing unit **624** is able to take action, such as requesting a change of a delivery date and time.

As described above, a trunk delivery service intended for items other than products ordered on the EC site is also conceivable. In this case, similarly, the delivery management server **50** just needs to acquire the latest vehicle use schedule information from the center server **30**. Thus, when a delivery date and time of a package to the trunk of the vehicle **10**A designated by a regular user of the vehicle **10**A conflicts with another schedule, the delivery management server **50** is able to take action, such as requesting a change of the delivery date and time.

As described above, the processing device **32** of the center server **30** includes the communication processing unit **321**, the condition determination unit **322**, the authentication key issuance unit **323**, the location information management unit **324**, the schedule management unit **325**, the registration management unit **326**, and the storage unit **320**.

When the condition determination unit **322** has received an authentication key arrangement request from the delivery management server **50** via the communication processing unit **321**, the condition determination unit **322** determines

whether the authentication key arrangement request is a regular authentication key arrangement request. For example, the condition determination unit **322** determines whether the authentication key arrangement request is a regular authentication key arrangement request based on the service login ID of the delivery site, included in the authentication key arrangement request, and predetermined authentication information (for example, an ID and a password, or the like) corresponding to the delivery management server **50**.

When the condition determination unit **322** determines that the authentication key arrangement request is a regular authentication key arrangement request, the authentication key issuance unit **323** identifies the vehicle **10**A corresponding to the authentication key arrangement request based on the user and service registration information DB of the storage unit **320**. The authentication key issuance unit **323** issues an authentication key with limited permission that limits the number of times the authentication key is available (for example, the number of times the authentication key is available is one) and that only allows the trunk lid to be locked or unlocked for a limited time (for example, usable within only a time length of several minutes to several tens of minutes from delivery of the authentication key). Thus, it is possible to prevent a delivery person from using the vehicle **10**A without permission and improve security. The authentication key issuance unit **323** delivers an authentication key to the mobile terminal **20**Ac of a delivery person via the communication processing unit **321**. The delivery person is identified by the authentication key arrangement request.

For example, any method, such as a known mathematical method and a method using bidirectional communication between the center server **30** and the vehicle **10**, may be employed as a method of limiting the available period of an authentication key, the number of times an authentication key is available, or the like.

The location information management unit **324** transmits a location information request to the vehicle **10**A via the communication processing unit **321** in response to an inquiry about the current location of the vehicle **10**A from the delivery management server **50**. The inquiry is received by the communication processing unit **321**. Thus, the DCM **14** of the vehicle **10**A returns the location information of the vehicle **10**A, which is input from the GPS module **13**, to the center server **30** in response to the location information request from the center server **30**. The location information management unit **324** is able to acquire the current location information of the vehicle **10**A via the communication processing unit **321**. The location information management unit **324** returns the current location information acquired from the vehicle **10**A to the delivery management server **50** via the communication processing unit **321**.

The schedule management unit **325** returns the latest vehicle use schedule information saved in the storage unit **320** to the EC server **60** via the communication processing unit **321** in response to an inquiry from the EC server **60**. The inquiry is received by the communication processing unit **321**.

As described above, the registration management unit **326** registers a regular user (child user) who uses various services including the trunk delivery service in response to a user registration request that is received from the mobile terminal **20**Aa of the owner user by the communication processing unit **321**. As described above, the registration management unit **326** also registers the regular user of the vehicle **10**A with the trunk delivery service in response to a service registration request that is received from the mobile terminal **20**Aa of the owner user by the communication processing unit **321**. As described above, when the registration management unit **326** has completed registration with various services including the trunk delivery service, the registration management unit **326** also provides a notification of completion of registration to the mobile terminal **20**Aa or the mobile terminal **20**Ab, corresponding to the regular user to be registered, via the communication processing unit **321**. When the registration management unit **326** has completed registration with the trunk delivery service, the registration management unit **326** transmits a service registration completion notification including service link information to the delivery management server **50** and the EC server **60** that manage operations of the service intended for registration via the communication processing unit **321**.

As described above, the processing device **23** of the mobile terminal **20**Ac of a delivery person includes the communication processing unit **231**, the communication processing unit **232**, the authentication key acquisition unit **233**, the authentication requesting unit **234**, and the lock/unlock requesting unit **235**.

In the present embodiment, description will be made on the assumption that the functions of the authentication key acquisition unit **233**, authentication requesting unit **234**, and lock/unlock requesting unit **235** of the mobile terminal **20**Ac become available to the delivery person when the key application is launched.

The authentication key acquisition unit **233** transmits an authentication key acquisition request to the delivery management server **50** via the communication processing unit **232** in response to a predetermined operation of the delivery person. At this time, the authentication key acquisition request includes the above-described delivery item information saved in the storage unit **230** in advance. Thus, the delivery management server **50** transmits an authentication key arrangement request to the center server **30** in response to the authentication key acquisition request, and the center server **30** delivers an authentication key to the mobile terminal **20**Ac in response to the authentication key arrangement request, with the result that the mobile terminal **20**Ac acquires the authentication key. Thus, since the mobile terminal **20**Ac is able to lock or unlock the trunk lid of the vehicle **10**A based on the functions of the communication processing unit **231**, authentication requesting unit **234** and lock/unlock requesting unit **235**, the delivery person is allowed to deliver a requested item to the trunk of the vehicle **10**A, lock the trunk of the vehicle **10**A as it was, and leave.

Details of Components Related to C2C Car Sharing Service

Next, components related to the C2C car sharing service in the authentication key management system **1** will be described with reference to FIG. **5**.

FIG. **5** is a block diagram that mainly shows an example of components related to the C2C car sharing service in the authentication key management system **1**. Hereinafter, for FIG. **5**, components related to the C2C car sharing service in the authentication key management system **1** will be mainly described, and the overlap description of components that overlap with the components related to the above-described key sharing service, and the like, is omitted as much as possible.

As described above, the processing device **23** of the mobile terminal **20**Aa owned by the owner user of the vehicle **10**A includes the communication processing unit

232, the user registration requesting unit 236, the service registration requesting unit 237, and the service use status requesting unit 238.

As described above, the user registration requesting unit 236 requests registration of the regular user (child user) of the vehicle 10A, who uses various services including the C2C car sharing service, to the center server 30 in response to a predetermined operation of the owner user.

As described above, the service registration requesting unit 237 requests registration of each registered regular user (the owner user or the child user) with various services including the C2C car sharing service to the center server 30 in response to a predetermined operation of the owner user.

For example, the service registration requesting unit 237 transmits a service registration request for using the C2C car sharing service to the center server 30. The service registration request includes a service login ID of a website for users who use the C2C car sharing service corresponding to the C2C car sharing management server 70 (hereinafter, referred to as C2C car sharing site) as service link information. The service login ID corresponds to the regular user of the vehicle 10A, who is to be registered.

As described above, the service use status requesting unit 238 requests information related to the use statuses of various services, including the C2C car sharing service, by the regular user of the vehicle 10A (service use status information) to the center server 30 in response to a predetermined operation of the owner user. The regular user of the vehicle 10A has been registered in association with the owner user ID.

The C2C car sharing management server 70 includes a communication device 71 and the processing device 72.

The communication device 71 is any device that bidirectionally carries out communication with each of the mobile terminals 20 and the center server 30 through a predetermined communication network.

The processing device 72 includes, for example, a communication processing unit 721, a service cooperation registration unit 722, a reservation management unit 723, and a vehicle management unit 724 as functional units that are implemented by executing one or more programs stored in the ROM or the auxiliary storage device on the CPU. The processing device 72 also includes the storage unit 720 that is implemented as a storage area, such as the auxiliary storage device of the server computer.

Description will be made on the assumption that information that identifies the vehicle 10A for rent has been already registered (saved) in the storage unit 720 through the C2C car sharing site by the regular user (owner user) of the vehicle 10A in association with a service login ID.

The communication processing unit 721 controls the communication device 71, and exchanges various signals, such as control signals and information signals, with each of the mobile terminals 20 and the center server 30.

The service cooperation registration unit 722 registers information for cooperation between the center server 30 and the C2C car sharing management server 70, related to usage of the C2C car sharing service by the regular user of the vehicle 10A, in response to a service registration completion notification that is received from the center server 30 by the communication processing unit 721.

For example, the service cooperation registration unit 722 adds a flag to a service login ID included in a service registration completion notification in the user management DB for managing users on the C2C car sharing site constructed in the storage unit 720. The flag indicates that the user corresponding to the service login ID is a letter of the vehicle 10A in the C2C car sharing service. Thus, the C2C car sharing management server 70 is able to cause the center server 30 to deliver an authentication key to the mobile terminal 20Ad of a renter, as will be described later, by transmitting an authentication key arrangement request including a service login ID corresponding to the regular user of the vehicle 10A, who is a letter, to the center server 30.

The reservation management unit 723 manages reservations for the use of the vehicle 10A. The reservations are made through the C2C car sharing site, or the like.

For example, the reservation management unit 723 receives registration of a rentable date and time of the vehicle 10A from the regular user of the vehicle 10A through the C2C car sharing site, or the like, and registers (saves) the received rentable date and time in the storage unit 720. At this time, the reservation management unit 723 makes an inquiry about vehicle use schedule information to the center server 30 via the communication processing unit 721. Thus, the reservation management unit 723 is able to acquire the latest vehicle use schedule information via the communication processing unit 721. For this reason, for example, when the rentable date and time received from the regular user of the vehicle 10A already conflicts with another schedule, the C2C car sharing management server 70 is able to take action, such as requesting a change of the rentable date and time and registering the date and time obtained by excluding the conflicting time from the received rentable date and time as a rentable date and time.

For example, the reservation management unit 723 also receives a reservation for the use of the vehicle 10A within the rentable date and time of the vehicle 10A. The rentable date and time of the vehicle 10A is saved in the storage unit 720. As the reservation management unit 723 receives a reservation for the use of the vehicle 10A from a user who is a renter through the C2C car sharing site, the reservation management unit 723 updates information pertaining to a rental schedule of the vehicle 10A (rental schedule information). The rental schedule information is saved in the storage unit 720.

For example, when the communication processing unit 721 has received an authentication key acquisition request from the mobile terminal 20Ad of the renter of the vehicle 10A, the reservation management unit 723 determines whether the authentication key acquisition request is a regular authentication key acquisition request. Specifically, the reservation management unit 723 may carry out the determination based on the service login ID and password of the C2C car sharing site, included in the authentication key acquisition request, and a relation with a reservation date and time (for example, whether the date and time of receipt of the authentication key acquisition request falls within the reservation date and time, whether a period of time from the date and time of receipt of the authentication key acquisition request to a start date and time is shorter than a predetermined time, or the like). When the authentication key acquisition request is a regular authentication key acquisition request, the reservation management unit 723 transmits an authentication key arrangement request to the center server 30 via the communication processing unit 721. At this time, the authentication key arrangement request includes information for identifying the mobile terminal 20Ad of the renter of the vehicle 10A. The information for identifying the renter of the vehicle 10A may be, for example, an authentication ID to get user authentication (hereinafter, referred to as renter ID for the sake of convenience) in the center server 30 in order for the renter of the vehicle 10A to

use the function of the authentication key acquisition unit **233** of the mobile terminal **20**Ad. Thus, the mobile terminal **20**Ad of the renter of the vehicle **10**A is able to acquire an authentication key from the center server **30**.

The vehicle management unit **724** manages the vehicle **10**A for rent.

For example, the vehicle management unit **724** makes an inquiry about the current location information of the vehicle **10**A to the center server **30** via the communication processing unit **721** before a reservation date and time of the vehicle **10**A (for example, a period from several tens of minutes before to just before). The vehicle management unit **724** acquires the current location information of the vehicle **10**A via the communication processing unit **721**. The current location information is returned from the center server **30** in response to the inquiry. Thus, before a scheduled rental date and time (reservation date and time) of the vehicle **10**A, it is possible to determine, for example, whether the vehicle **10**A has returned to a designated place. For this reason, when the vehicle **10**A has not returned to a designated place, the C2C car sharing management server **70** is able to take action, such as issuing an alarm to the regular user who is the letter of the vehicle **10**A to return to the designated place through an electric mail or a predetermined application that cooperates with the C2C car sharing site and that is installed onto the mobile terminal **20**Aa or the mobile terminal **20**Ab.

As described above, the processing device **32** of the center server **30** includes the communication processing unit **321**, the condition determination unit **322**, the authentication key issuance unit **323**, the location information management unit **324**, the schedule management unit **325**, the registration management unit **326**, and the storage unit **320**.

When the communication processing unit **321** has received an authentication key arrangement request from the C2C car sharing management server **70**, the condition determination unit **322** determines whether the authentication key arrangement request is a regular authentication key arrangement request. For example, the condition determination unit **322** determines whether the authentication key arrangement request is a regular authentication key arrangement request based on service link information (a service login ID of the C2C car sharing site, or the like) included in the authentication key arrangement request or predetermined authentication information (for example, an ID and a password, or the like) corresponding to the C2C car sharing management server **70**.

When the condition determination unit **322** determines that the authentication key arrangement request is a regular authentication key arrangement request, the authentication key issuance unit **323** identifies the vehicle **10**A corresponding to the authentication key arrangement request based on the user and service registration information DB of the storage unit **320**. The authentication key issuance unit **323** issues an authentication key for a limited time (for example, an authentication key available only within a reservation date and time of the vehicle **10**A, included in the authentication key arrangement request, and buffer periods before and after the reservation date and time). The authentication key issuance unit **323** delivers the authentication key to the mobile terminal **20**Ad of the renter of the vehicle **10**A via the communication processing unit **321**. The renter of the vehicle **10**A is identified by the authentication key arrangement request.

The C2C car sharing service may include, for example, a service for renting only the trunk of the vehicle **10**A (C2C trunk sharing service). In the case of a vehicle trunk rental service, the authentication key issuance unit **323** just needs to issue an authentication key with limited permission that only allows the trunk lid to be locked or unlocked. Thus, it is possible to limit an object for rent in C2C car sharing to the trunk only. Thus, for example, a trunk delivery service for allowing a person to rent the trunk of the vehicle **10**A for rent during a trip and get delivery of purchased products for use during the trip to the rented trunk may be realized.

The location information management unit **324** transmits a location information request to the vehicle **10**A via the communication processing unit **321** in response to an inquiry about the current location of the vehicle **10**A. The inquiry is received from the C2C car sharing management server **70** by the communication processing unit **321**. Thus, the location information management unit **324** is able to acquire the current location information from the vehicle **10**A via the communication processing unit **321**. The location information management unit **324** returns the current location information acquired from the vehicle **10**A to the C2C car sharing management server **70** via the communication processing unit **321**.

The schedule management unit **325** transmits the latest vehicle use schedule information to the vehicle **10**A via the communication processing unit **321** in response to the inquiry about the current location of the vehicle **10**A. The inquiry is received from the C2C car sharing management server **70** by the communication processing unit **321**.

As described above, the registration management unit **326** registers a regular user (child user) who uses various services including the C2C car sharing service in response to a user registration request that is received from the mobile terminal **20**Aa of the owner user by the communication processing unit **321**. As described above, the registration management unit **326** also registers the regular user of the vehicle **10**A with the C2C car sharing service in response to a service registration request that is received from the mobile terminal **20**Aa of the owner user by the communication processing unit **321**. As described above, when the registration management unit **326** has completed registration with various services including the C2C car sharing service, the registration management unit **326** also provides a notification of completion of registration to the mobile terminal **20**Aa or the mobile terminal **20**Ab, corresponding to the regular user to be registered, via the communication processing unit **321**. When the registration management unit **326** has completed registration with the C2C car sharing service, the registration management unit **326** transmits a service registration completion notification including service link information to the C2C car sharing management server **70** that manages operations of the service intended for registration.

As described above, the processing device **23** of the mobile terminal **20**Ad of the renter of the vehicle **10**A includes the communication processing unit **231**, the communication processing unit **232**, the authentication key acquisition unit **233**, the authentication requesting unit **234**, the lock/unlock requesting unit **235**, and the storage unit **230**.

The authentication key acquisition unit **233** transmits an authentication key acquisition request to the C2C car sharing management server **70** via the communication processing unit **232** in response to a predetermined operation of the renter of the vehicle **10**A. At this time, the authentication key acquisition request includes a service login ID of the C2C car sharing site. The service login ID corresponds to the renter of the vehicle **10**A. Thus, the C2C car sharing management server **70** transmits an authentication key arrangement request to the center server **30** in response to

the authentication key acquisition request, and the center server **30** delivers an authentication key to the mobile terminal **20**Ad in response to the authentication key arrangement request, with the result that the mobile terminal **20**Ad acquires the authentication key. Thus, the mobile terminal **20**Ad is able to lock or unlock the doors of the vehicle **10**A based on the functions of the communication processing unit **231**, authentication requesting unit **234** and lock/unlock requesting unit **235**. That is, with the C2C car sharing service, the renter of the vehicle **10**A, who owns the mobile terminal **20**Ad, is allowed to directly use the vehicle **10**A, for example, lock or unlock the vehicle **10**A or drive the vehicle **10**A, with the use of the mobile terminal **20**Ad without handing over a key to or from the regular users of the vehicle **10**A. Similarly, each regular user of the vehicle **10**A is allowed to rent the vehicle **10**A to a person other than the regular users without handing over a key. For this reason, it is possible to improve convenience in renting the vehicle **10**A between each regular user of the vehicle **10**A and a person other than the regular users with the C2C car sharing service in the authentication key management system **1**.

Details of Components Related to B2C Car Sharing Service

Next, components related to the B2C car sharing service in the authentication key management system **1** will be described with reference to FIG. **6**.

FIG. **6** is a block diagram that mainly shows an example of components related to the B2C car sharing service in the authentication key management system **1**. Hereinafter, for FIG. **6**, components related to the B2C car sharing service in the authentication key management system **1** will be mainly described, and the overlap description of components that overlap with the components related to the above-described key sharing service, and the like, is omitted as much as possible.

The B2C car sharing management server **80** includes a communication device **81** and the processing device **82**.

The communication device **81** is any device that bidirectionally carries out communication with each of the mobile terminal **20**B and the center server **30** through a predetermined communication network.

The processing device **82** includes, for example, a communication processing unit **821**, a reservation management unit **822**, and a vehicle management unit **823** as functional units that are implemented by executing one or more programs stored in the ROM or the auxiliary storage device on the CPU. The processing device **82** also includes the storage unit **820** that is implemented as a storage area, such as the auxiliary storage device of the server computer.

The communication processing unit **821** controls the communication device **81**, and exchanges various signals, such as control signals and information signals, with each of the mobile terminal **20**B and the center server **30**.

The reservation management unit **822** manages reservations for the use of the vehicle **10**B. The reservations are made through the B2C car sharing site, or the like.

For example, the reservation management unit **822** receives a reservation for the use of the vehicle **10**B from a user who wants to rent the vehicle **10**B (hereinafter, referred to as rent user) through a web site that is operated by a business operator of the B2C car sharing management server **80**, or the like (hereinafter, referred to as B2C car sharing site for the sake of convenience). The reservation management unit **822** saves information related to the received reservation for the use of the vehicle **10**B (use reservation information) in the storage unit **820**. At this time, the use reservation information includes, for example, information that identifies the intended vehicle **10**B, information related to a use reservation date and time (a start date and time and an end date and time), a service login ID of the rent user on the B2C car sharing site, and the like.

For example, each time the reservation management unit **822** receives a reservation for the use of the vehicle **10**B, the reservation management unit **822** updates information related to a use schedule of the vehicle **10**B (vehicle use schedule information), saved in the storage unit **820**. Thus, the B2C car sharing management server **80** is able to show available dates and times for reservation to the rent user by causing the B2C car sharing site to display the use schedule of the vehicle **10**B.

For example, when the communication processing unit **821** has received an authentication key acquisition request from the mobile terminal **20**B, the reservation management unit **822** determines whether the authentication key acquisition request is a regular authentication key acquisition request. Specifically, the reservation management unit **822** may carry out the determination based on the service login ID and password of the B2C car sharing site, corresponding to the rent user and included in the authentication key acquisition request, and a relation with a reservation date and time (for example, whether the date and time of receipt of the authentication key acquisition request falls within the reservation date and time, whether a period of time from the date and time of receipt of the authentication key acquisition request to a start date and time is shorter than a predetermined time, or the like). When the authentication key acquisition request is a regular authentication key acquisition request, the reservation management unit **822** transmits an authentication key arrangement request to the center server **30** via the communication processing unit **821**. At this time, the authentication key arrangement request includes information for identifying the mobile terminal **20**B of the rent user who rents the vehicle **10**B. The information for identifying the rent user who rents the vehicle **10**B may be, for example, an authentication ID to get user authentication (hereinafter, referred to as rent user ID for the sake of convenience) in the center server **30** in order for the rent user who rents the vehicle **10**B to use the functions of the key application, corresponding to the authentication key acquisition unit **233**, and the like, of the mobile terminal **20**B. Thus, the mobile terminal **20**B of the rent user who rents the vehicle **10**B is able to acquire an authentication key from the center server **30**.

The vehicle management unit **823** manages the vehicle **10**B for rent.

For example, the vehicle management unit **823** makes an inquiry about the vehicle **10**B parked around (for example, within several hundreds of meters, or the like, from) a place designated in a reservation to the center server **30** via the communication processing unit **821** before a reservation date and time of the vehicle **10**B for a rent user (for example, several tens of minutes before). The vehicle management unit **823** acquires the location information of the vehicle **10**B parked around the designated place via the communication processing unit **821**. The location information is returned from the center server **30** in response to the inquiry. Thus, before the date and time at which the renter starts using the vehicle **10**B, the vehicle management unit **823** is able to identify one or plurality of vehicles **10**B parked around the designated place, and determine, for example, which vehicle **10**B to rent.

For example, the vehicle management unit **823** makes an inquiry about the location information of the vehicle **10**B in a designated area to the center server **30** via the communication processing unit **821** in response to a request to search

for a vehicle **10**B in the designated area from the rent user on the B2C car sharing site. The vehicle management unit **823** acquires the location information of the vehicle **10**B in the designated area via the communication processing unit **821**. The location information is returned from the center server **30** in response to the inquiry. Thus, the vehicle management unit **823** is, for example, able to show the location information of the intended vehicle **10**B to the rent user who wants to immediately rent the vehicle **10**B in the designated area on the B2C car sharing site.

As described above, the processing device **32** of the center server **30** includes the communication processing unit **321**, the condition determination unit **322**, the authentication key issuance unit **323**, and the storage unit **320**.

When the communication processing unit **321** has received an authentication key arrangement request from the B2C car sharing management server **80**, the condition determination unit **322** determines whether the authentication key arrangement request is a regular authentication key arrangement request. For example, the condition determination unit **322** determines whether the authentication key arrangement request is a regular authentication key arrangement request based on whether the rent user ID included in the authentication key arrangement request is the authentication ID registered in the storage unit **320** or predetermined authentication information (for example, an ID and a password, or the like) corresponding to the B2C car sharing management server **80**.

When the condition determination unit **322** determines that the authentication key arrangement request is a regular authentication key arrangement request, the authentication key issuance unit **323** issues an authentication key for a limited time (for example, an authentication key available only within a reservation date and time of the vehicle **10**B, included in the authentication key arrangement request, and buffer periods before and after the reservation date and time). The authentication key issuance unit **323** delivers the authentication key to the mobile terminal **20**B of the rent user who rents the vehicle **10**B via the communication processing unit **321**. The rent user is identified by the authentication key arrangement request.

As described above, the processing device **23** of the mobile terminal **20**B of the rent user who rents the vehicle **10**B includes the communication processing unit **231**, the communication processing unit **232**, the authentication key acquisition unit **233**, the authentication requesting unit **234**, the lock/unlock requesting unit **235**, and the storage unit **230**.

The authentication key acquisition unit **233** transmits an authentication key acquisition request to the B2C car sharing management server **80** via the communication processing unit **232** in response to a predetermined operation of the rent user who rents the vehicle **10**B. At this time, the authentication key acquisition request includes a service login ID of the B2C car sharing site, or the like. The service login ID corresponds to the rent user who rents the vehicle **10**B. Thus, the B2C car sharing management server **80** transmits an authentication key arrangement request to the center server **30** in response to the authentication key acquisition request, and the center server **30** delivers an authentication key to the mobile terminal **20**B in response to the authentication key arrangement request, with the result that the mobile terminal **20**B acquires the authentication key. Thus, the mobile terminal **20**B is able to lock or unlock the doors of the vehicle **10**B based on the functions of the communication processing unit **231**, authentication requesting unit **234** and lock/unlock requesting unit **235**. That is, with the B2C car sharing service, the rent user who rents the vehicle **10**B and owns the mobile terminal **20**B is allowed to directly use the vehicle **10**B, for example, lock or unlock the vehicle **10**B or drive the vehicle **10**B, with the use of the mobile terminal **20**B without handing over a key to or from the business operator, or the like, of the vehicle **10**B. For this reason, it is possible to improve convenience of the rent user who rents the vehicle **10**B with the B2C car sharing service in the authentication key management system **1**.

Details of Characteristic Operations of Center Server

Next, the characteristic process flow of the center server **30** will be described with reference to FIG. **7** and FIG. **9**.

FIG. **7** is a flowchart that schematically shows an example of a registration process for a regular user of the vehicle **10**A to use the above-described various services (service registration process), which is executed by the center server **30** according to the present embodiment. A process according to this flowchart is repeatedly executed at predetermined processing intervals. Hereinafter, this also applies to the flowchart of FIG. **9**.

In step S**702**, the registration management unit **326** determines whether the communication processing unit **321** has received a service registration request. When a service registration request has been received, the registration management unit **326** proceeds to step S**704**; otherwise, the registration management unit **326** ends the current process.

In step S**704**, the registration management unit **326** executes an authentication process using an owner user ID and password included in the service registration request received by the communication processing unit **321**.

In step S**706**, the registration management unit **326** determines whether authentication is successful, that is, whether the service registration request is a regular service registration request. When the service registration request is a regular service registration request, the registration management unit **326** proceeds to step S**708**; otherwise, the registration management unit **326** proceeds to step S**712**.

In step S**708**, the registration management unit **326** registers (saves) service unique information (service ID) corresponding to an intended service, vehicle unique information (key unit ID) corresponding to a vehicle **10**A, and a regular user ID (an owner user ID or a child user ID) corresponding to a regular user who uses the service in the user and service registration information DB of the storage unit **320** in association with the owner user ID included in the service registration request.

In step S**710**, the registration management unit **326** transmits a notification that registration with the intended service has completed (service registration completion notification) to the key sharing management unit **327** or any one of the service management servers **40**, corresponding to the intended service. Similarly, the registration management unit **326** provides a notification that registration with the intended service has completed to the mobile terminal **20**Aa of the owner user and the mobile terminal **20**Ab of the regular user (child user) to be registered. The registration management unit **326** ends the current process.

On the other hand, in step S**712**, the registration management unit **326** provides a notification that registration with the intended service is not allowed (that is, user authentication has failed) to the mobile terminal **20**Aa of the owner user, and ends the current process.

For example, FIG. **8** is a view that schematically shows an example of the user and service registration information DB constructed in the storage unit **520** with the process of FIG. **7**. Specifically, FIG. **8** is a view that shows a correspondence relation between an owner user ID and key unit IDs, regular

user IDs, service IDs and pieces of service link information, associated with the owner user ID, which are registered in the user and service registration information DB of the storage unit **520**.

In this example, the owner user owns two vehicles **10**A, and one child user who is a member of the family, or the like, of the owner user is registered as a regular user who is allowed to use various services. Services that the owner user is allowed to use with the first vehicle **10**A include a key sharing service, a trunk delivery service, and a C2C car sharing service, and services that the child user is allowed to use with the first vehicle **10**A include the key sharing service and the trunk delivery service. Services that the owner user is allowed to use with the second vehicle **10**A include the key sharing service and the trunk delivery service, and services that the child user is allowed to use with the second vehicle **10**A include only the key sharing service.

In this way, the registration management unit **326** registers permission for each regular user of the vehicle **10**A to use a predetermined service using the vehicle **10**A in the user and service registration information DB. The permission is permission to cause the authentication key issuance unit **323** to deliver key information (authentication key) to the mobile terminal **20**Ac or the mobile terminal **20**Ad, owned by a third party concerned with the service, other than each regular user of the vehicle **10**A (authentication key arrangement permission) as an external device (any one of the service management servers **40**, or the like) concerned with the service transmits a predetermined request signal (authentication key arrangement request).

Thus, the center server **30** by itself is able to manage permission to cause any one of the service management servers **40**, concerned with the service, such as the C2C car sharing service and the trunk delivery service, to deliver an authentication key to the mobile terminal **20**Ac or mobile terminal **20**Ad of the third party concerned with the service, such as a renter of the vehicle **10**A and a delivery person. For this reason, for example, even when authentication information, such as an ID and a password, or the like, for causing any one of the service management servers **40** to deliver an authentication key has leaked, since the ID and the password are unique to the corresponding service, it is not possible to perform registration with a new service with the use of the authentication information. In addition, the center server **30** normally often restricts access from a user other than the regular users of the vehicle **10**A, and it is originally difficult for a third party in bad faith to perform registration with a service in the center server **30**. Therefore, the center server **30** is able to reduce registration with a service using the vehicle **10**A by a third party in bad faith without permission and usage of the vehicle **10**A by a third party in bad faith without permission through a service registered without permission.

As shown in FIG. **8**, the registration management unit **326** saves an intended vehicle **10**A (key unit ID) that is used in a service, a regular user (regular user ID) of the vehicle **10**A, who uses the service, the intended service (service ID), and service link information in the storage unit **520** in association with an owner user ID. The service link information associates the intended service with the vehicle **10**A and the regular user. That is, the registration management unit **326** registers authentication key arrangement permission of each of the key sharing management unit **327** and the service management servers **40** for the regular user of the vehicle **10**A to use a service using the vehicle **10**A in association with an owner user ID.

Thus, the center server **30** is able to monistically manage information related to a service to be registered with an owner user ID as a source. The center server **30** is also able to manage authentication key arrangement permission in association with unique information (owner user ID) that corresponds to an owner user and that is commonly only available to the owner user. Therefore, since unique information corresponding to an owner user is required at the time of registration with a service, the center server **30** is able to reduce, for example, registration with a service using a vehicle **10**A by a regular user of the vehicle **10**A other than the owner user (for example, a member of a family of the owner user, a close friend of the owner user, or the like) without permission.

As shown in FIG. **8**, the registration management unit **326** saves service link information for delivering an authentication key to the mobile terminal **20**Ac or mobile terminal **20**Ad of a third party (for example, a delivery person of the trunk delivery service or a renter of the C2C car sharing service) other than a regular user of a vehicle **10**A, concerned with any one of various services, and information that identifies the vehicle **10**A (key unit ID), different from the service link information, in the storage unit **520**, in association with each other. Thus, the center server **30** by itself is able to manage service link information that is required for the mobile terminal **20**Ac or mobile terminal **20**Ad of a third party concerned with a service, such as a delivery person of the trunk delivery service and a renter of the C2C car sharing service, to acquire an authentication key. Specifically, the center server **30** is able to manage service link information in association with information unique to a vehicle **10**A (vehicle unique information). For this reason, without providing a service provider with vehicle unique information for identifying a vehicle **10**A, it is possible to identify the vehicle **10**A to be locked or unlocked with an authentication key from service link information included in a request to deliver an authentication key (authentication key arrangement request), which is received from an external device concerned with the service (any one of the service management servers **40**), a mobile terminal **20**, or the like. That is, even if a third party in bad faith attempts to register a service in the center server **30** without permission, not only service link information but also vehicle unique information that is commonly available to only a regular user, or the like, such as an owner user of a vehicle **10**A, is required. Therefore, the center server **30** is able to reduce registration with a service using the vehicle **10**A by a third party in bad faith without permission and usage of the vehicle **10**A by a third party in bad faith without permission through a service registered without permission.

In this example, the vehicle unique information is a key unit ID unique to the key unit **12** mounted on each vehicle **10**A. Thus, the center server **30** is able to manage service link information in association with unique information (key unit ID) of an in-vehicle device (key unit **12**) concerned with the function of unlocking or starting the vehicle **10**A upon reception of a signal transmitted from the mobile terminal **20**, not in association with general information unique to the vehicle **10**A, such as VIN. Therefore, since unique information of an in-vehicle device, which there is a limited opportunity for a third party to see, is employed, the center server **30** is able to further reduce registration with a service using the vehicle **10**A without permission and usage of the vehicle **10**A without permission through a service registered without permission.

Subsequently, FIG. **9** is a flowchart that schematically shows an example of a service use status information providing process that is executed by the center server **30**.

In step S**902**, the registration management unit **326** determines whether the communication processing unit **321** has received a service use status request. When the communication processing unit **321** has received a service use status request, the registration management unit **326** proceeds to step S**904**; otherwise, the registration management unit **326** ends the current process.

In step S**904**, the registration management unit **326** generates service use status information of a type designated by the service use status request.

In step S**906**, the registration management unit **326** delivers the service use status information to the mobile terminal **20**Aa via the communication processing unit **321**, and ends the current process. Thus, an image corresponding to the service use status information (service use status image) delivered from the center server **30** is displayed on the display **24** of the mobile terminal **20**Aa. For this reason, the owner user is allowed to monistically see the use of each service using the vehicle **10**A over a plurality of regular users and a plurality of services, which are registered in the storage unit **320** (user and service registration information DB) of the center server **30**.

For example, FIG. **10** is a view that shows specific examples of service use status images that are displayed on the display **24** of the mobile terminal **20**Aa of the owner user. Specifically, FIG. **10** shows specific examples, that is, five types of service use status images **1001**, **1002**, **1003**, **1004**, **1005** that are displayed on the display **24** of the mobile terminal **20**Aa.

The service use status image **1001** shows a list of vehicles **10**A to be used in various services. The vehicles **10**A have been registered in the storage unit **520** (user and service registration information DB) of the center server **30** in association with the owner user ID. In this example, vehicle images that schematically show two vehicles **10**A registered by the owner user are tiled vertically in the service use status image **1001**.

The service use status image **1002** shows a list of services that have been registered in association with the owner user ID. In this example, business operator names that provide registered services are shown in the service use status image **1002**, and, specifically, the service use status image **1002** shows that "XX Transport" that provides a trunk delivery service and "YY Car Sharing" that provides a C2C car sharing service have been registered.

The service use status image **1003** shows a list of regular users registered in association with the owner user ID. In this example, human images that schematically show two regular users (the owner user and a child user) who use various services are tiled vertically in the service use status image **1003**. In addition, a vehicle image that schematically shows a vehicle **10**A that is used in various services that each regular user uses is shown to the right side of the human image of a corresponding one of the regular users in the service use status image **1003**, and, specifically, the service use status image **1003** shows that one regular user uses various services with the use of a vehicle **10**A and the other user uses various services with the use of two vehicles **10**A.

The service use status image **1004** shows a use schedule of a vehicle **10**A over all the regular users and all the services. All the regular users and all the services have been registered in association with the owner user ID. In this example, a use schedule corresponding to various services of a vehicle **10**A for two regular users is shown in the service use status image **1004**.

The service use status image **1005** shows a list of history records of locking or unlocking of a vehicle **10**A with an authentication key. The history records are registered in association with the owner user ID. In this example, dates and times at which the vehicle **10**A was locked or unlocked with an authentication key and delivery destinations (persons who locked or unlocked the vehicle **10**A) of the authentication key used are shown in the service use status image **1005**.

In this way, the registration management unit **326** transmits information related to a service (service use status information) to the mobile terminal **20**Aa in response to a request from the mobile terminal **20**Aa having the owner user ID via the communication processing unit **321**. The service corresponds to authentication key arrangement permission associated with the owner user ID. Thus, the center server **30** is able to transmit information related to a registered service to a terminal (mobile terminal **20**Aa) of the owner user in response to a request from the terminal having unique information corresponding to the owner user (owner user ID), that is, a request from the terminal of the owner user. For this reason, the owner user is allowed to see information related to registered services (for example, a list of registered services, a use schedule of vehicles that are used in all the services, and the like), which is displayed on a display, or the like, of the terminal. Therefore, the center server **30** is able to cause the owner user to monistically see information related to the registered services.

The registration management unit **326** transmits service use status information to the mobile terminal **20**Aa in response to a request from the mobile terminal **20**Aa having the owner user ID via the communication processing unit **321**. The service use status information includes information related to a regular user of the vehicle **10**A, other than the owner user. The regular user of the vehicle **10**A corresponds to authentication key arrangement permission associated with the owner user ID. Thus, the center server **30** is able to transmit information related to the regular user of the vehicle **10**A, other than the owner user, who uses registered services to a terminal of the owner user in response to a request from the terminal (mobile terminal **20**Aa) of the owner user. For this reason, the owner user is allowed to see information related to the regular user of the vehicle **10**A, other than the owner user, who uses registered services that are displayed on a display, or the like, of the terminal (for example, a list of users of various services, a use schedule of a vehicle over all the users, and the like). Therefore, the center server **30** is able to cause the owner user to monistically see information related to users of registered services (regular users of a vehicle, other than the owner user).

The embodiment of the disclosure is described in detail above; however, the disclosure is not limited to the specific embodiment. Various modifications or changes are applicable within the scope of the disclosure recited in the appended claims.

For example, in the above-described embodiment, the mobile terminal **20** transmits an authentication request including an authentication key to the key unit **12**, the key unit **12** exchanges signals with the lock/unlock and start device **11** in response to an authentication result based on the authentication key, and locking or unlocking of the doors of the vehicle **10**A or starting of the vehicle **10**A is realized by the lock/unlock and start device **11**; however, the disclosure is not limited to this mode.

Specifically, the function of the key unit **12** may be transferred to the mobile terminal **20**, and locking or unlocking of the doors of the vehicle **10**A or starting of the vehicle **10**A may be realized by the lock/unlock and start device **11** as the mobile terminal **20** exchanges signals based on the above-described key information (internal key information) with a vehicle **10** (lock/unlock and start device **11**) by LF radio waves and RF radio waves. In this case, the authentication key in the above-described embodiment just needs to be read as key information. That is, the center server **30** may issue key information instead of an authentication key and deliver the key information to the mobile terminal **20** with a similar method to the authentication key in the above-described embodiment. Thus, similar operation and advantageous effects to those of the above-described embodiment are obtained.

The function of the key unit **12** may be integrated into the lock/unlock and start device **11**, and components related to communication between the lock/unlock and start device **11** and the key unit **12** and authentication related to the communication (the LF radio wave transmitter **111**, the RF radio wave receiver **112**, the collation ECU **113**, the LF radio wave receiver **121**, and the RF radio wave transmitter **122**) may be omitted. In this case, when authentication of the mobile terminal **20** is successful based on an authentication key, the key ECU **124** may directly output an unlock or lock instruction to the body ECU **114** or a start instruction to the engine ECU **116**, instead of the collation ECU **113**, and cause the body ECU **114** to lock or unlock the doors of the vehicle **10** and cause the engine ECU **116** to start the vehicle **10**. Thus, similar operation and advantageous effects to those of the above-described embodiment are obtained.

What is claimed is:

1. A key information management device comprising:

an information processing device configured to

i) deliver key information to a mobile terminal as the mobile terminal transmits a predetermined transmission signal toward a vehicle, the key information being information for unlocking the vehicle, starting the vehicle, or unlocking and starting the vehicle, and

ii) register permission for a user of the vehicle to use a predetermined service using the vehicle, the permission being permission to cause the information processing device to deliver the key information to another third party mobile terminal of a third party concerned with the predetermined service, other than the user of the vehicle, as an external server device concerned with the predetermined service transmits a predetermined request signal.

2. The key information management device according to claim **1**, wherein the information processing device is configured to register the permission further in association with unique information corresponding to an owner user of the vehicle.

3. The key information management device according to claim **2**, wherein:

the information processing device is configured to transmit information related to the predetermined service to the mobile terminal having the unique information corresponding to the owner user in response to a request from the mobile terminal having the unique information corresponding to the owner user; and

the predetermined service corresponds to the permission associated with the unique information corresponding to the owner user.

4. The key information management device according to claim **3**, wherein:

the information processing device is configured to store the permission for each user of the vehicle in association with the unique information corresponding to the owner user;

the information processing device is configured to transmit information related to a user of the vehicle, other than the owner user, to the mobile terminal having the unique information corresponding to the owner user in response to a request from the mobile terminal having the unique information corresponding to the owner user; and

the user of the vehicle, other than the owner user, corresponds to the permission associated with the unique information corresponding to the owner user.

5. The key information management device according to claim **1**, further comprising a communication device configured to bidirectionally carry out communication with each of the vehicles, the mobile terminals, and the external server device through a predetermined communication network.

6. The key information management device according to claim **1**, wherein the key information further includes information for locking the vehicle.

7. A key information management method that is executed by a key information management device, the key information management method comprising:

delivering key information to a mobile terminal as the mobile terminal transmits a predetermined transmission signal toward a vehicle, the key information being information for unlocking the vehicle, starting the vehicle, or unlocking and starting the vehicle; and

registering permission for a user of the vehicle to use a predetermined service using the vehicle, the permission being permission to deliver the key information to another third party mobile terminal of a third party concerned with the predetermined service, other than the user of the vehicle, as an external server device concerned with the predetermined service transmits a predetermined request signal.

8. A non-transitory computer-readable recording medium comprising a key information management program recorded on the recording medium, the key information management program causing an information processing device to execute instructions for:

delivering key information to a mobile terminal as the mobile terminal transmits a predetermined transmission signal toward a vehicle, the key information being information for unlocking the vehicle, starting the vehicle, or unlocking and starting the vehicle; and

registering permission for a user of the vehicle to use a predetermined service using the vehicle, the permission being permission to deliver the key information to another third party mobile terminal of a third party concerned with the predetermined service, other than the user of the vehicle, as an external server device concerned with the predetermined service transmits a predetermined request signal.

* * * * *