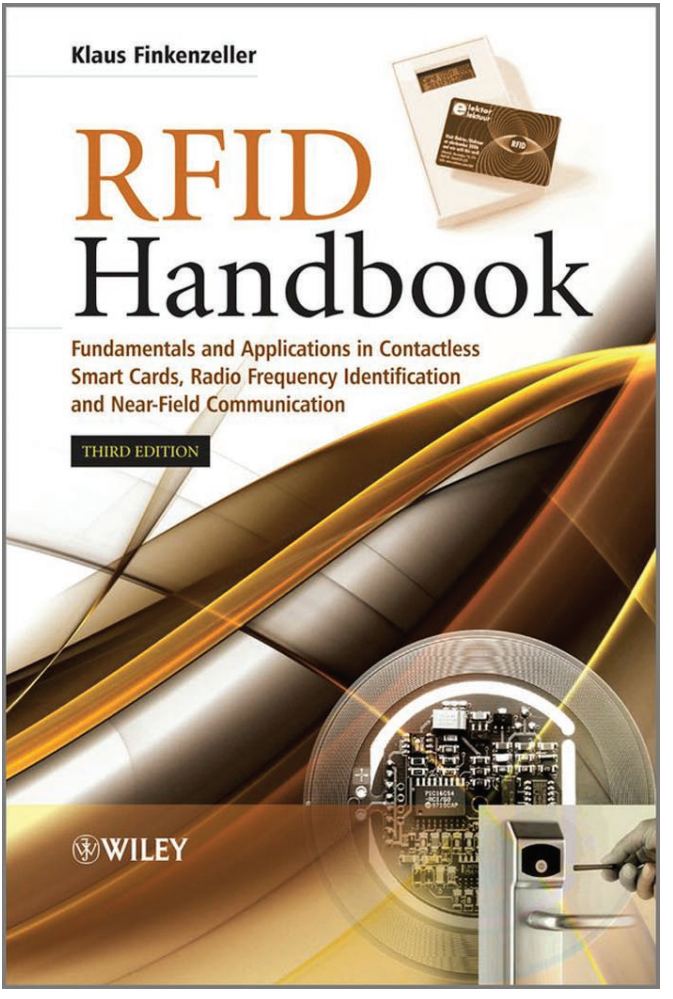


TransCore LP
Exhibit 1023

# RFID HANDBOOK

## THIRD EDITION

# RFID HANDBOOK

## FUNDAMENTALS AND APPLICATIONS IN CONTACTLESS SMART CARDS, RADIO FREQUENCY IDENTIFICATION AND NEAR-FIELD COMMUNICATION, THIRD EDITION

**Klaus Finkenzeller**

*Giesecke & Devrient GmbH, Munich, Germany*

**Translated by Dörte Müller**

*Powerwording.com*

WILEY

A John Wiley and Sons, Ltd., Publication

This edition first published 2010

© 2010, John Wiley & Sons, Ltd.

*Registered office*
John Wiley & Sons Ltd, The Atrium, Southern Gate, Chichester, West Sussex, PO19 8SQ, United Kingdom

For details of our global editorial offices, for customer services and for information about how to apply for permission to reuse the copyright material in this book please see our website at www.wiley.com.

The right of the author to be identified as the author of this work has been asserted in accordance with the Copyright, Designs and Patents Act 1988.

All rights reserved. No part of this publication may be reproduced, stored in a retrieval system, or transmitted, in any form or by any means, electronic, mechanical, photocopying, recording or otherwise, except as permitted by the UK Copyright, Designs and Patents Act 1988, without the prior permission of the publisher.

Wiley also publishes its books in a variety of electronic formats. Some content that appears in print may not be available in electronic books.

Designations used by companies to distinguish their products are often claimed as trademarks. All brand names and product names used in this book are trade names, service marks, trademarks or registered trademarks of their respective owners. The publisher is not associated with any product or vendor mentioned in this book. This publication is designed to provide accurate and authoritative information in regard to the subject matter covered. It is sold on the understanding that the publisher is not engaged in rendering professional services. If professional advice or other expert assistance is required, the services of a competent professional should be sought.

*Library of Congress Cataloging-in-Publication Data*

Finkenzeller, Klaus.
[RFID Handbuch. English]
Fundamentals and Applications in Contactless Smart Cards, Radio Frequency Identification and Near-Field Communication, Third Edition / Klaus Finkenzeller ; translated by Dörte Müller. – 3rd ed.
p. cm.
Includes index.
ISBN 978-0-470-69506-7 (cloth)
1. Inventory control–Automation. 2. Radio frequency identification systems. 3. Smart cards. I. Title.
TS160.F5513 2010
658.7′87 – dc22

2010008338

A catalogue record for this book is available from the British Library.

ISBN: 978-0-470-69506-7

Typeset in 9/11 Times by Laserwords Private Limited, Chennai, India
Printed and bound in Great Britain by CPI Antony Rowe, Chippenham, Wiltshire, UK

# Contents

**Preface to the Third Edition** **xi**

**List of Abbreviations** **xiii**

**1 Introduction** **1**
1.1 Automatic Identification Systems 2
*1.1.1 Barcode Systems* 2
*1.1.2 Optical Character Recognition* 3
*1.1.3 Biometric Procedures* 4
*1.1.4 Smart Cards* 4
*1.1.5 RFID Systems* 6
1.2 A Comparison of Different ID Systems 6
1.3 Components of an RFID System 6

**2 Differentiation Features of RFID Systems** **11**
2.1 Fundamental Differentiation Features 11
2.2 Transponder Construction Formats 13
*2.2.1 Disks and Coins* 13
*2.2.2 Glass Housing* 13
*2.2.3 Plastic Housing* 13
*2.2.4 Tool and Gas Bottle Identification* 15
*2.2.5 Keys and Key Fobs* 15
*2.2.6 Clocks* 17
*2.2.7 ID-1 Format, Contactless Smart Cards* 18
*2.2.8 Smart Label* 19
*2.2.9 Coil-on-Chip* 20
*2.2.10 Other Formats* 21
2.3 Frequency, Range and Coupling 21
2.4 Active and Passive Transponders 22
2.5 Information Processing in the Transponder 24
2.6 Selection Criteria for RFID Systems 25
*2.6.1 Operating Frequency* 26
*2.6.2 Range* 26
*2.6.3 Security Requirements* 27
*2.6.4 Memory Capacity* 28

**3 Fundamental Operating Principles 29**
3.1 1-Bit Transponder 29
*3.1.1 Radio Frequency* 29
*3.1.2 Microwaves* 33
*3.1.3 Frequency Divider* 34
*3.1.4 Electromagnetic Types* 35
*3.1.5 Acoustomagnetic* 38
3.2 Full- and Half-Duplex Procedure 39
*3.2.1 Inductive Coupling* 40
*3.2.2 Electromagnetic Backscatter Coupling* 45
*3.2.3 Close-Coupling* 48
*3.2.4 Data Transfer Reader → Transponder* 49
*3.2.5 Electrical Coupling* 50
3.3 Sequential Procedures 52
*3.3.1 Inductive Coupling* 52
*3.3.2 Surface Acoustic Wave Transponder* 55
3.4 Near-Field Communication (NFC) 57
*3.4.1 Active Mode* 57
*3.4.2 Passive Mode* 59

**4 Physical Principles of RFID Systems 61**
4.1 Magnetic Field 61
*4.1.1 Magnetic Field Strength H* 61
*4.1.2 Magnetic Flux and Magnetic Flux Density* 66
*4.1.3 Inductance L* 66
*4.1.4 Mutual Inductance M* 67
*4.1.5 Coupling Coefficient k* 68
*4.1.6 Faraday's Law* 70
*4.1.7 Resonance* 72
*4.1.8 Practical Operation of the Transponder* 76
*4.1.9 Interrogation Field Strength* $H_{\min}$ 77
*4.1.10 Total Transponder–Reader System* 84
*4.1.11 Measurement of System Parameters* 100
*4.1.12 Magnetic Materials* 106
4.2 Electromagnetic Waves 110
*4.2.1 The Generation of Electromagnetic Waves* 110
*4.2.2 Radiation Density S* 112
*4.2.3 Characteristic Wave Impedance and Field Strength E* 112
*4.2.4 Polarisation of Electromagnetic Waves* 114
*4.2.5 Antennas* 116
*4.2.6 Practical Operation of Microwave Transponders* 127
4.3 Surface Waves 144
*4.3.1 The Creation of a Surface Wave* 144
*4.3.2 Reflection of a Surface Wave* 146
*4.3.3 Functional Diagram of SAW Transponders* 147
*4.3.4 The Sensor Effect* 149
*4.3.5 Switched Sensors* 154

**5 Frequency Ranges and Radio Licensing Regulations 155**
5.1 Frequency Ranges Used 155

| | | | |
|---|---|---|---|
| | *5.1.1* | *Frequency Range 9–135 kHz* | 157 |
| | *5.1.2* | *Frequency Range 6.78 MHz (ISM)* | 158 |
| | *5.1.3* | *Frequency Range 13.56 MHz (ISM, SRD)* | 159 |
| | *5.1.4* | *Frequency Range 27.125 MHz (ISM)* | 159 |
| | *5.1.5* | *Frequency Range 40.680 MHz (ISM)* | 160 |
| | *5.1.6* | *Frequency Range 433.920 MHz (ISM)* | 160 |
| | *5.1.7* | *UHF Frequency Range* | 160 |
| | *5.1.8* | *Frequency Range 2.45 GHz (ISM, SRD)* | 161 |
| | *5.1.9* | *Frequency Range 5.8 GHz (ISM, SRD)* | 161 |
| | *5.1.10* | *Frequency Range 24.125 GHz* | 161 |
| | *5.1.11* | *Selection of a Suitable Frequency for Inductively Coupled RFID Systems* | 162 |
| 5.2 | The International Telecommunication Union (ITU) | | 164 |
| 5.3 | European Licensing Regulations | | 165 |
| | *5.3.1* | *CEPT/ERC REC 70-03* | 166 |
| | *5.3.2* | *Standardised Measuring Procedures* | 170 |
| 5.4 | National Licensing Regulations in Europe | | 172 |
| | *5.4.1* | *Germany* | 172 |
| 5.5 | National Licensing Regulations | | 175 |
| | *5.5.1* | *USA* | 175 |
| 5.6 | Comparison of National Regulations | | 176 |
| | *5.6.1* | *Conversion at 13.56 MHz* | 176 |
| | *5.6.2* | *Conversion on UHF* | 178 |
| **6** | **Coding and Modulation** | | **179** |
| 6.1 | Coding in the Baseband | | 179 |
| 6.2 | Digital Modulation Procedures | | 180 |
| | *6.2.1* | *Amplitude Shift Keying (ASK)* | 182 |
| | *6.2.2* | *2 FSK* | 185 |
| | *6.2.3* | *2 PSK* | 185 |
| | *6.2.4* | *Modulation Procedures with Subcarrier* | 187 |
| **7** | **Data Integrity** | | **189** |
| 7.1 | The Checksum Procedure | | 189 |
| | *7.1.1* | *Parity Checking* | 189 |
| | *7.1.2* | *LRC Procedure* | 190 |
| | *7.1.3* | *CRC Procedure* | 191 |
| 7.2 | Multi-Access Procedures – Anticollision | | 194 |
| | *7.2.1* | *Space Division Multiple Access (SDMA)* | 196 |
| | *7.2.2* | *Frequency Domain Multiple Access (FDMA)* | 197 |
| | *7.2.3* | *Time Domain Multiple Access (TDMA)* | 197 |
| | *7.2.4* | *Examples of Anticollision Procedures* | 199 |
| **8** | **Security of RFID Systems** | | **213** |
| 8.1 | Attacks on RFID Systems | | 214 |
| | *8.1.1* | *Attacks on the Transponder* | 215 |
| | *8.1.2* | *Attacks on the RF Interface* | 216 |
| 8.2 | Protection by Cryptographic Measures | | 226 |
| | *8.2.1* | *Mutual Symmetrical Authentication* | 227 |
| | *8.2.2* | *Authentication using Derived Keys* | 228 |
| | *8.2.3* | *Encrypted Data Transfer* | 228 |

**9 Standardisation 233**
9.1 Animal Identification 233
*9.1.1 ISO/IEC 11784 – Code Structure* 233
*9.1.2 ISO/IEC 11785 – Technical Concept* 234
*9.1.3 ISO/IEC 14223 – Advanced Transponders* 236
9.2 Contactless Smart Cards 240
*9.2.1 ISO/IEC 10536 – Close-Coupling Smart Cards* 241
*9.2.2 ISO/IEC 14443 – Proximity-Coupling Smart Cards* 243
*9.2.3 ISO/IEC 15693 – Vicinity-Coupling Smart Cards* 258
*9.2.4 ISO/IEC 10373 – Test Methods for Smart Cards* 263
9.3 ISO/IEC 69873 – Data Carriers for Tools and Clamping Devices 267
9.4 ISO/IEC 10374 – Container Identification 267
9.5 VDI 4470 – Anti-theft Systems for Goods 267
*9.5.1 Part 1 – Detection Gates – Inspection Guidelines for Customers* 267
*9.5.2 Part 2 – Deactivation Devices – Inspection Guidelines for Customers* 270
9.6 Item Management 270
*9.6.1 ISO/IEC 18000 Series* 270
*9.6.2 GTAG Initiative* 273
*9.6.3 EPCglobal Network* 274

**10 The Architecture of Electronic Data Carriers 283**
10.1 Transponder with Memory Function 283
*10.1.1 RF Interface* 283
*10.1.2 Address and Security Logic* 286
*10.1.3 Memory Architecture* 289
10.2 Microprocessors 300
*10.2.1 Dual Interface Card* 303
10.3 Memory Technology 307
*10.3.1 RAM* 307
*10.3.2 EEPROM* 308
*10.3.3 FRAM* 309
*10.3.4 Performance Comparison FRAM – EEPROM* 310
10.4 Measuring Physical Variables 311
*10.4.1 Transponder with Sensor Functions* 311
*10.4.2 Measurements Using Microwave Transponders* 312
*10.4.3 Sensor Effect in Surface Wave Transponders* 315

**11 Readers 317**
11.1 Data Flow in an Application 317
11.2 Components of a Reader 317
*11.2.1 RF Interface* 318
*11.2.2 Control Unit* 323
11.3 Integrated Reader ICs 324
*11.3.1 Integrated RF Interface* 325
*11.3.2 Single-Chip Reader IC* 327
11.4 Connection of Antennas for Inductive Systems 331
*11.4.1 Connection Using Current Matching* 333
*11.4.2 Supply via Coaxial Cable* 333
*11.4.3 The Influence of the Q Factor* 338
11.5 Reader Designs 338

| | | |
|---|---|---|
| | *11.5.1 OEM Readers* | 338 |
| | *11.5.2 Readers for Industrial Use* | 338 |
| | *11.5.3 Portable Readers* | 338 |
| 11.6 | Near-Field Communication | 339 |
| | *11.6.1 Secure NFC* | 341 |
| **12** | **The Manufacture of Transponders and Contactless Smart Cards** | **347** |
| 12.1 | Glass and Plastic Transponders | 347 |
| | *12.1.1 Chip Manufacture* | 347 |
| | *12.1.2 Glass Transponders* | 348 |
| | *12.1.3 Plastic Transponders* | 351 |
| 12.2 | Contactless Smart Cards | 352 |
| | *12.2.1 Coil Manufacture* | 352 |
| | *12.2.2 Connection Technique* | 356 |
| | *12.2.3 Lamination* | 359 |
| **13** | **Example Applications** | **361** |
| 13.1 | Contactless Smart Cards | 361 |
| 13.2 | Public Transport | 362 |
| | *13.2.1 The Starting Point* | 362 |
| | *13.2.2 Requirements* | 363 |
| | *13.2.3 Benefits of RFID Systems* | 363 |
| | *13.2.4 Fare Systems using Electronic Payment* | 365 |
| | *13.2.5 Market Potential* | 366 |
| | *13.2.6 Example Projects* | 366 |
| 13.3 | Contactless Payment Systems | 372 |
| | *13.3.1 MasterCard®* | 374 |
| | *13.3.2 ExpressPay by American Express®* | 374 |
| | *13.3.3 Visa® Contactless* | 374 |
| | *13.3.4 ExxonMobil Speedpass* | 375 |
| 13.4 | NFC Applications | 375 |
| 13.5 | Electronic Passport | 380 |
| 13.6 | Ski Tickets | 383 |
| 13.7 | Access Control | 385 |
| | *13.7.1 Online Systems* | 385 |
| | *13.7.2 Offline Systems* | 385 |
| | *13.7.3 Transponders* | 387 |
| 13.8 | Transport Systems | 388 |
| | *13.8.1 Eurobalise S21* | 388 |
| | *13.8.2 International Container Transport* | 390 |
| 13.9 | Animal Identification | 391 |
| | *13.9.1 Stock Keeping* | 391 |
| | *13.9.2 Carrier Pigeon Races* | 395 |
| 13.10 | Electronic Immobilisation | 398 |
| | *13.10.1 The Functionality of an Immobilisation System* | 399 |
| | *13.10.2 Brief Success Story* | 401 |
| | *13.10.3 Predictions* | 402 |
| 13.11 | Container Identification | 403 |
| | *13.11.1 Gas Bottles and Chemical Containers* | 403 |
| | *13.11.2 Waste Disposal* | 404 |

13.12 Sporting Events 405
13.13 Industrial Automation 409
*13.13.1 Tool Identification* 409
*13.13.2 Industrial Production* 410
13.14 Medical Applications 417

**14 Appendix 419**
14.1 Contact Addresses, Associations and Technical Periodicals 419
*14.1.1 Industrial Associations* 419
*14.1.2 Technical Journals* 421
*14.1.3 RFID on the Internet* 422
14.2 Relevant Standards and Regulations 423
*14.2.1 Standardisation Bodies* 423
*14.2.2 List of Standards* 423
*14.2.3 Sources for Standards and Regulations* 428
14.3 Printed Circuit Board Layouts 429
*14.3.1 Test Card in Accordance with ISO 14443* 429
*14.3.2 Field Generator Coil* 435
*14.3.3 Reader for 13.56 MHz* 435

**References 441**

**Index 449**

# Preface to the Third Edition

This book is aimed at an extremely wide range of readers. First and foremost it is intended for engineers and students who find themselves confronted with RFID technology for the first time. A few basic chapters are provided for this audience describing the functionality of RFID technology and the physical and IT-related principles underlying this field. The book is also intended for practitioners who, as users, wish to or need to obtain as comprehensive and detailed an overview of the various technologies, the legal framework or the possible applications of RFID as possible.

Although a wide range of individual articles are now available on this subject, the task of gathering all this scattered information together when it is needed is a tiresome and time-consuming one – as researching each new edition of this book proves. This book therefore aims to fill a gap in the range of literature on the subject of RFID. The need for well-founded technical literature in this field is proven by the fortunate fact that this book has now already appeared in five languages. Editions in two further languages are currently being prepared. Further information on the German version of the RFID handbook and the translations can be found on the homepage of this book, http://RFID-handbook.com.

This book uses numerous pictures and diagrams to attempt to give a graphic representation of RFID technology in the truest sense of the word. Particular emphasis is placed on the physical principles of RFID, which is why the chapter on this subject is by far the most comprehensive of the book. However, great importance is also assigned to providing an understanding of the basic concepts, data carrier and reader, as well as of the relevant standards and radio-technology regulations.

Technological developments in the field of RFID technology are proceeding at such a pace that although a book like this can explain the general scientific principles it is not dynamic enough to be able to explore the latest trends regarding the most recent products on the market and the latest standards and regulations. With the widespread use of RFID technology, it becomes also increasingly difficult not to lose track of applications. In ever-shorter intervals, the media provides information on new applications for RFID systems. I am therefore grateful for any suggestions and advice – particularly from the field of industry. The basic concepts and underlying physical principles remain, however, and provide a good background for understanding the latest developments.

A new addition to this third edition is Near-Field Communication (NFC) which has been introduced to several different chapters. Chapter 3 now includes the fundamentals of NFC; and Chapter 13 presents NFC interface components and describes the extension from NFC to secure-NFC.

Another addition is a complete wiring diagram and proposed circuit for an RFID reader according to ISO/IEC 14443. A layout and complete component kit of this wiring diagram and circuit is also available on the Internet.

It was a very special occasion when the Fraunhofer Smart Card Prize 2008 – which annually honors special contributions to smart-card technology - was awarded to the known smart-card

handbook of my two colleagues Rankl and Effing as well as to this RFID handbook. The prize-giving ceremony took place on the occasion of the 18th Smart-Card Workshop of the Fraunhofer Institute for Secure Information Technology (SIT) in Darmstadt on 5 February 2008.

In March 2008, we were able to look back on ten successful years of the RFID Handbook. The first German-language edition was published in March 1998 and comprised 280 pages. At that time, RFID was still a niche technology and hardly known to the public; this has completely changed. Today, RFID has become an established term; and due to applications such as the electronic passport and electronic product code (EPC), a broad public has become aware of this technology.

At this point I would also like to express my thanks to all companies which were kind enough to contribute to the success of this project by providing numerous technical data sheets, lecture manuscripts, drawings and photographs.

Klaus Finkenzeller

Munich, Autumn 2008

# List of Abbreviations

| | |
|---|---|
| µP | Microprocessor |
| µs | Microsecond ($10^{-6}$s) |
| ABS | Acrylnitrilbutadienstyrol |
| ACM | Access configuration matrix |
| AFC | Automatic fare collection |
| AFI | Application family identifier (see ISO 14443-3) |
| AI | Application identifier |
| AM | Amplitude modulation |
| APDU | Application data unit |
| ASCII | American Standard Code for Information Interchange |
| ASIC | Application specific integrated circuit |
| ASK | Amplitude shift keying |
| ATQ | Answer to request (ATQA, ATQB: see ISO 14443-3) |
| ATR | Answer to reset |
| AVI | Automatic vehicle identification (for railways) |
| BAC | Basic access control (ePassport) |
| BAPT | Bundesamt für Post und Telekommunikation (now the Federal Network Agency for Electricity, Gas, Telecommunications, Post and Railway) |
| Bd | Baud, transmission speed in bit/s |
| BGT | Block guard time |
| BKA | Germany's Federal Criminal Police Office |
| BMBF | Bundesministerium für Bildung und Forschung (Ministry for Education and Research, was BMFT) |
| BMI | German Federal Ministry of the Interior |
| BP | Bandpass filter |
| BSI | German Federal Office for Information Security |
| C | Capacitance (of a capacitor) |
| CCG | Centrale für Coorganisation GmbH (central allocation point for EAN codes in Germany) |
| CCITT | Comité Consultatif International Télégraphique et Téléphonique |
| CEN | Comité Européen de Normalisation |
| CEPT | Conférence Européene des Postes et Télécommunications |
| CERP | Comité Européen de Règlementation Postale |
| CICC | Close coupling integrated circuit chip card |
| CIU | Contactless interface unit (transmission/receiving module for contactless microprocessor interfaces) |
| CLK | Clock (timing signal) |
| CRC | Cyclic redundancy checksum |

| | |
|---|---|
| dBm | Logarithmic measure of power, related to 1 mW HF-power (0 dBm = 1 mW, 30 dBm = 1 W) |
| DBP | Differential bi-phase encoding |
| DIN | Deutsche Industrienorm (German industrial standard) |
| DoD | Department of Defense (USA) |
| DS | Discovery services (EPC) |
| DWD | German Weather Service |
| EAN | European Article Number (barcode on groceries and goods) |
| EAS | Electronic article surveillance |
| EC | Eurocheque or electronic cash |
| ECC | European Communications Committee |
| ECTRA | European Committee for Regulatory Telecommunications Affairs |
| EDI | Electronic document interchange |
| EEPROM | Electric erasable and programmable read-only memory |
| EIRP | Equivalent isotropic radiated power |
| EMC | Electromagnetic compatibility |
| EOF | End of frame |
| EPC | Electronic product code |
| EPCIS | EPC Information Services |
| ERC | European Radiocommunications Committee |
| ERM | Electromagnetic compatibility and radio spectrum matters |
| ERO | European Radiocommunications Office |
| ERO | European Radio Office |
| ERP | Equivalent radiated power |
| ETCS | European Train Control System |
| ETS | European Telecommunication Standard |
| ETSI | European Telecommunication Standards Institute |
| EVC | European Vital Computer (part of ETCS) |
| FCC | Federal Commission of Communication |
| FDX | Full-duplex |
| FHSS | Frequency hopping spread spectrum |
| FM | Frequency modulation |
| FRAM | Ferroelectric random access memory |
| FSK | Frequency shift keying |
| GIAI | Global individual asset identifier (EPC) |
| GID | General identifier (EPC) |
| GRAI | Global returnable asset identifier (EPC) |
| GSM | Global System for Mobile Communication (was Groupe Spécial Mobile) |
| GTAG | Global-tag (RFID Initiative of EAN and the UCC) |
| HDX | Half-duplex |
| HF | High frequency (3–30 MHz) |
| $I^2C$ | Inter-IC-bus |
| ICAO | International Civil Aviation Organization |
| ICC | Integrated chip card |
| ID | Identification |
| ISM | Industrial scientific medical (frequency range) |
| ISO | International Organization for Standardization |
| ITU | International Telecommunication Union |
| L | Loop (inductance of a coil) |
| LAN | Local area network |

| | |
|---|---|
| LBT | Listen before talk |
| LF | Low frequency (30–300 kHz) |
| LPD | Low-power device (low-power radio system for the transmission of data or speech over a few hundred metres) |
| LRC | Longitudinal redundancy check |
| LSB | Least significant bit |
| MAD | MIFARE® Application Directory |
| MRZ | Machine readable zone (ePassport) |
| MSB | Most significant bit |
| NAD | Node address |
| NFC | Near field communication |
| nomL | Nonpublic mobile land radio (industrial radio, transport companies, taxi radio, etc.) |
| NRZ | Non-return-to-zero encoding |
| NTC | Negative temperature coefficient (thermal resistor) |
| NTWC | New Technologies Working Group (ICAO) |
| NVB | Number of valid bits (see ISO 14443-3) |
| OCR | Optical character recognition |
| OEM | Original equipment manufacturer |
| ONS | Object naming server (EPC) |
| OTA | Over the air (possibility to program a SIM card or a secure element via the GPRS/UMTS interface of a mobile phone) |
| OTP | One time programmable |
| PC | Personal computer |
| PCD | Proximity card device (see ISO 14443) |
| PICC | Proximity integrated contactless chip card (see ISO 14443) |
| PIN | Personal identification number |
| PKI | Public key infrastructure |
| PMU | Power management unit |
| POS | Point of sale |
| PP | Plastic package |
| PPS | Polyphenylensulfide |
| PSK | Phase shift keying |
| PUPI | Pseudo-unique PICC identifier (see ISO 14443-3) |
| PVC | Polyvinylchloride |
| R&TTE | Radio and Telecommunication Terminal Equipment (The Radio Equipment and Telecommunications Terminal Equipment Directive (1999/5/EC)) |
| RADAR | Radio detecting and ranging |
| RAM | Random access memory |
| RCS | Radar cross-section |
| REQ | Request |
| RFID | Radio frequency identification |
| RFU | Reserved for future use |
| RTI | Returnable trade items |
| RTI | Road transport information system |
| RTTT | Road transport and traffic telematics |
| RWD | Read–write device |
| SAM | Security authentication module |
| SAW | Surface acoustic wave |
| SCL | Serial clock ($I^2C$ bus interface) |
| SDA | Serial data address input–output ($I^2C$ bus interface) |

| | |
|---|---|
| SEQ | Sequential system |
| SGLN | Serialised global location number (EPC) |
| SMD | Surface-mounted devices |
| SNR | Serial number |
| SOF | Start of frame |
| SRAM | Static random access memory |
| SRD | Short-range devices (low-power radio systems for the transmission of data or voice over short distances, typically a few hundred metres) |
| SSCC | Serial shipping container code (EPC) |
| TR | Technical Regulation |
| UART | Universal asynchronous receiver–transmitter (transmission/receiving module for computer interfaces) |
| UCC | Universal Code Council (American standard for barcodes on groceries and goods) |
| UHF | Ultra-high frequency (300 Mhz to 3 GHz) |
| UN | United Nations |
| UPC | Universal Product Code |
| UPU | Universal Postal Union |
| VCD | Vicinity card device (see ISO 15693) |
| VDE | Verein Deutscher Elektrotechniker (German Association of Electrical Engineers) |
| VHE | Very high frequency (30 MHz to 300 MHz) |
| VICC | Vicinity integrated contactless chip card (see ISO 15693) |
| VSWR | Voltage standing wave ratio |
| XOR | Exclusive OR |
| ZV | Zulassungsvorschrift (Licensing Regulation) |

## Trademarks

| | |
|---|---|
| HITAG®, i · Code® and MIFARE® | are registered trademarks of Philips elektronics N.V. |
| LEGIC® | is a registered trademark of Kaba Security Locking Systems AG |
| MICROLOG® | is a registered trademark of Idesco |
| TagIt® and TIRIS® | are registered trademarks of Texas Instruments |
| TROVAN® | is a registered trademark of AEG ID systems |

# 1

# Introduction

In recent years automatic identification procedures (Auto-ID) have become very popular in many service industries, purchasing and distribution logistics, industry, manufacturing companies and material flow systems. Automatic identification procedures exist to provide information about people, animals, goods and products in transit.

The omnipresent barcode labels that triggered a revolution in identification systems some considerable time ago, are being found to be inadequate in an increasing number of cases. Barcodes may be extremely cheap, but their stumbling block is their low storage capacity and the fact that they cannot be reprogrammed.

The technically optimal solution would be the storage of data in a silicon chip. The most common form of electronic data-carrying devices in use in everyday life is the smart card based upon a contact field (telephone smart card, bank cards). However, the mechanical contact used in the smart card is often impractical. A contactless transfer of data between the data-carrying device and its reader is far more flexible. In the ideal case, the power required to operate the electronic data-carrying device would also be transferred from the reader using contactless technology. Because of the procedures used for the transfer of power and data, contactless ID systems are called *RFID systems* (radio frequency identification).

The number of companies actively involved in the development and sale of RFID systems indicates that this is a market that should be taken seriously. Whereas global sales of RFID systems were approximately 900 million $US in the year 2000 it is estimated that this figure will reach 2650 million $US in 2005 (Krebs, n.d.). The *RFID market* therefore belongs to the fastest growing sector of the radio technology industry, including mobile phones and cordless telephones (Figure 1.1).

Furthermore, in recent years contactless identification has been developing into an independent interdisciplinary field, which no longer fits into any of the conventional pigeonholes. It brings together elements from extremely varied fields: RF technology and EMC, semiconductor technology, data protection and cryptography, telecommunications, manufacturing technology and many related areas.

As an introduction, the following section gives a brief overview of different automatic ID systems that perform similar functions to RFID (Figure 1.2).

*RFID Handbook: Fundamentals and Applications in Contactless Smart Cards, Radio Frequency Identification and Near-Field Communication, Third Edition.* Klaus Finkenzeller
© 2010 John Wiley & Sons, Ltd

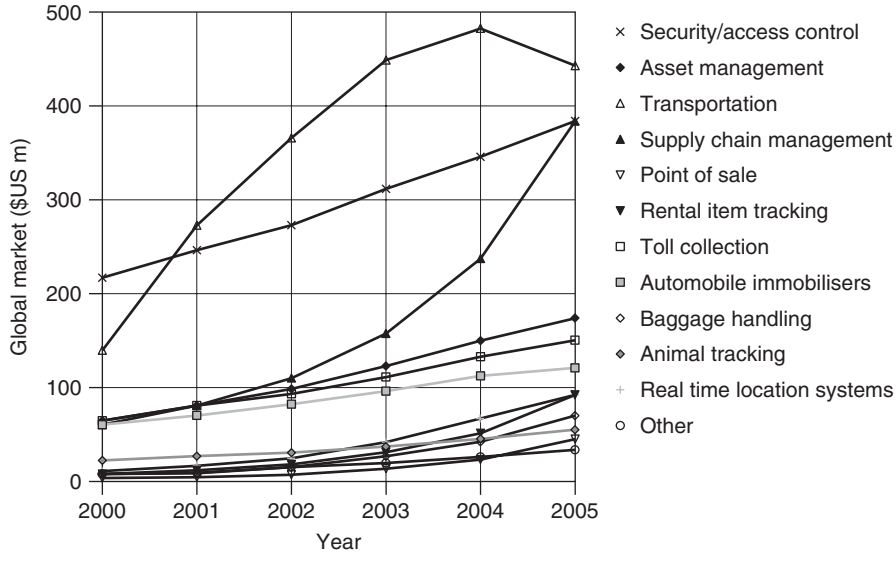


**Figure 1.1** The estimated growth of the global market for RFID systems between 2000 and 2005 in million $US, classified by application (Krebs, n.d.)

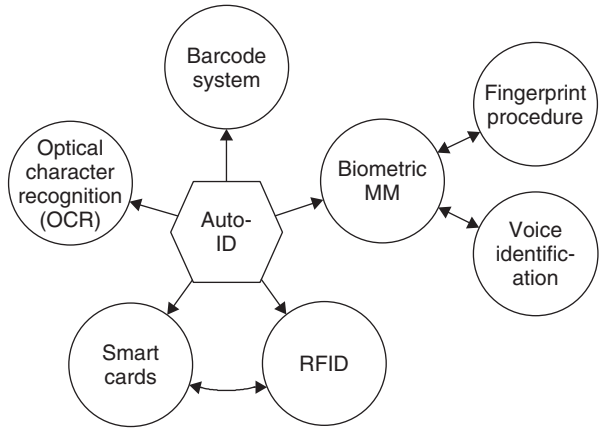


**Figure 1.2** Overview of the most important auto-ID procedures

## 1.1 Automatic Identification Systems

### *1.1.1 Barcode Systems*

*Barcodes* have successfully held their own against other identification systems over the past 20 years. According to experts, the turnover volume for barcode systems totalled around 3 billion DM in Western Europe at the beginning of the 1990s (Virnich and Posten, 1992).

| Country identifier | | Company identifier | | | | | Manufacturer's item number | | | | | CD |
|---|---|---|---|---|---|---|---|---|---|---|---|---|
| 4 | 0 | 1 | 2 | 3 | 4 | 5 | 0 | 8 | 1 | 5 | 0 | 9 |
| FRG | | Company Name<br>1 Road Name<br>80001 Munich | | | | | Chocolate Rabbit<br>100 g | | | | | |

**Figure 1.3** Example of the structure of a barcode in EAN coding

**Table 1.1** Common barcodes with typical applications

| Code | Typical application |
|---|---|
| Code Codabar | Medical/clinical applications, fields with high safety requirements |
| Code 2/5 interleaved | Automotive industry, goods storage, pallets, shipping containers and heavy industry |
| Code 39 | Processing industry, logistics, universities and libraries |

The barcode is a binary code comprising a field of bars and gaps arranged in a parallel configuration. They are arranged according to a predetermined pattern and represent data elements that refer to an associated symbol. The sequence, made up of wide and narrow bars and gaps, can be interpreted numerically and alphanumerically. It is read by optical laser scanning, i.e. by the different reflection of a laser beam from the black bars and white gaps (ident, 1996). However, despite being identical in their physical design, there are considerable differences between the code layouts in the approximately ten different barcode types currently in use.

The most popular barcode by some margin is the *EAN code* (European Article Number), which was designed specifically to fulfil the requirements of the grocery industry in 1976. The EAN code represents a development of the UPC (Universal Product Code) from the USA, which was introduced in the USA as early as 1973. Today, the UPC represents a subset of the EAN code, and is therefore compatible with it (Virnich and Posten, 1992).

The EAN code is made up of 13 digits: the country identifier, the company identifier, the manufacturer's item number and a check digit.

In addition to the EAN code, the barcodes shown in Table 1.1 are popular in other industrial fields.

### *1.1.2 Optical Character Recognition*

*Optical character recognition* (OCR) was first used in the 1960s. Special fonts were developed for this application that stylised characters so that they could be read both in the normal way by people and automatically by machines. The most important advantage of OCR systems is the high density of information and the possibility of reading data visually in an emergency, or simply for checking (Virnich and Posten, 1992). Today, OCR is used in production, service and administrative fields, and also in banks for the registration of cheques (personal data, such as name and account number, is printed on the bottom line of a cheque in OCR type). However, OCR systems have failed to become universally applicable because of their high price and the complicated readers that they require in comparison with other ID procedures.

## *1.1.3 Biometric Procedures*

*Biometrics* is defined as the science of counting and (body) measurement procedures involving living beings. In the context of identification systems, biometry is the general term for all procedures that identify people by comparing unmistakable and individual physical characteristics. In practice, these are fingerprinting and handprinting procedures, voice identification and, less commonly, retina (or iris) identification.

### 1.1.3.1 Voice Identification

Recently, specialised systems have become available to identify individuals using speaker verification (speaker recognition). In such systems, the user talks into a microphone linked to a computer. This equipment converts the spoken words into digital signals, which are evaluated by the identification software.

The objective of speaker verification is to check the supposed identity of the person based upon their voice. This is achieved by checking the speech characteristics of the speaker against an existing reference pattern. If they correspond, then a reaction can be initiated (e.g. 'open door').

### 1.1.3.2 Fingerprinting Procedures (Dactyloscopy)

Criminology has been using fingerprinting procedures for the identification of criminals since the early twentieth century. This process is based upon the comparison of papillae and dermal ridges of the fingertips, which can be obtained not only from the finger itself, but also from objects that the individual in question has touched.

When fingerprinting procedures are used for personal identification, usually for entrance procedures, the fingertip is placed upon a special reader. The system calculates a data record from the pattern it has read and compares this with a stored reference pattern. Modern fingerprint ID systems require less than half a second to recognise and check a fingerprint. In order to prevent violent frauds, fingerprint ID systems have even been developed that can detect whether the finger placed on the reader is that of a living person (Schmidhäusler, 1995).

## *1.1.4 Smart Cards*

A *smart card* is an electronic data storage system, possibly with additional computing capacity (microprocessor card), which – for convenience – is incorporated into a plastic card the size of a credit card. The first smart cards in the form of prepaid telephone smart cards were launched in 1984. Smart cards are placed in a reader, which makes a galvanic connection to the contact surfaces of the smart card using contact springs. The smart card is supplied with energy and a clock pulse from the reader via the contact surfaces. Data transfer between the reader and the card takes place using a bidirectional serial interface (I/O port). It is possible to differentiate between two basic types of smart card based upon their internal functionality: the memory card and the microprocessor card.

One of the primary advantages of the smart card is the fact that the data stored on it can be protected against undesired (read) access and manipulation. Smart cards make all services that relate to information or financial transactions simpler, safer and cheaper. For this reason, 200 million smart cards were issued worldwide in 1992. In 1995 this figure had risen to 600 million, of which 500 million were memory cards and 100 million were microprocessor cards. The *smart card market* therefore represents one of the fastest growing subsectors of the microelectronics industry.

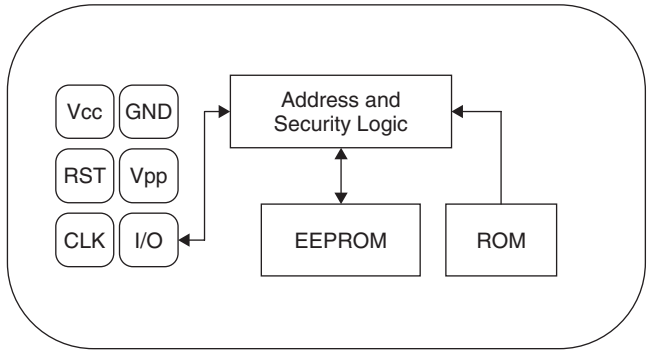


**Figure 1.4** Typical architecture of a memory card with security logic

One disadvantage of contact-based smart cards is the vulnerability of the contacts to wear, corrosion and dirt. Readers that are used frequently are expensive to maintain due to their tendency to malfunction. In addition, readers that are accessible to the public (telephone boxes) cannot be protected against vandalism.

#### 1.1.4.1 Memory Cards

In *memory cards* the memory – usually an EEPROM – is accessed using a sequential logic (state machine) (Figure 1.5). It is also possible to incorporate simple security algorithms, e.g. stream ciphering, using this system. The functionality of the memory card in question is usually optimised for a specific application. Flexibility of application is highly limited but, on the positive side, memory cards are very cost effective. For this reason, memory cards are predominantly used in price-sensitive, large-scale applications (Rankl and Effing, 1996). One example of this is the national insurance card used by the state pension system in Germany (Lemme, 1993).

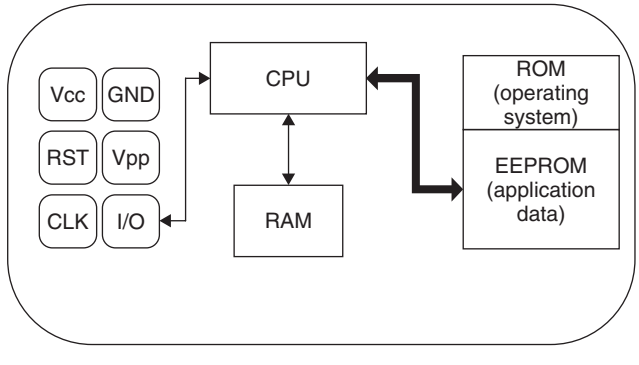


**Figure 1.5** Typical architecture of a microprocessor card

#### 1.1.4.2 Microprocessor Cards

As the name suggests, *microprocessor cards* contain a microprocessor, which is connected to a segmented memory (ROM, RAM and EEPROM segments).

The mask programmed ROM incorporates an *operating system* (higher program code) for the microprocessor and is inserted during chip manufacture. The contents of the ROM are determined during manufacturing, are identical for all microchips from the same production batch, and cannot be overwritten.

The chip's EEPROM contains application data and application-related program code. Reading from or writing to this memory area is controlled by the operating system.

The RAM is the microprocessor's temporary working memory. Data stored in the RAM are lost when the supply voltage is disconnected.

Microprocessor cards are very flexible. In modern smart card systems it is also possible to integrate different applications in a single card (multi-application). The application-specific parts of the program are not loaded into the EEPROM until after manufacture and can be initiated via the operating system.

Microprocessor cards are primarily used in security-sensitive applications. Examples are smart cards for GSM mobile phones and the new EC (electronic cash) cards. The option of programming the microprocessor cards also facilitates rapid adaptation to new applications (Rankl and Effing, 1996).

### *1.1.5 RFID Systems*

RFID systems are closely related to the smart cards described above. Like smart card systems, data is stored on an electronic data-carrying device – the transponder. However, unlike the smart card, the power supply to the data-carrying device and the data exchange between the data-carrying device and the reader are achieved without the use of galvanic contacts, using instead magnetic or electromagnetic fields. The underlying technical procedure is drawn from the fields of radio and radar engineering. The abbreviation RFID stands for radio frequency identification, i.e. information carried by radio waves.

Due to the numerous advantages of RFID systems compared with other identification systems, RFID systems are now beginning to conquer new mass markets. One example is the use of contactless smart cards as tickets for short-distance public transport.

## 1.2 A Comparison of Different ID Systems

A comparison between the identification systems described above highlights the strengths and weakness of RFID in relation to other systems (Table 1.2). Here too, there is a close relationship between contact-based smart cards and RFID systems; however, the latter circumvent all the disadvantages related to faulty contacting (sabotage, dirt, unidirectional insertion, time-consuming insertion, etc.).

## 1.3 Components of an RFID System

An *RFID system* is always made up of two components (Figure 1.6):

- the *transponder*, which is located on the object to be identified;
- the interrogator or *reader*, which, depending upon the design and the technology used, may be a read or write/read device (in this book – in accordance with normal colloquial usage – the data capture device is always referred to as the *reader*, regardless of whether it can only read data or is also capable of writing).

**Table 1.2** Comparison of different RFID systems showing their advantages and disadvantages

| System parameters | Barcode | OCR | Voice recognition | Biometry | Smart card | RFID systems |
|---|---|---|---|---|---|---|
| Typical data quantity (bytes) | 1–100 | 1–100 | – | – | 16–64 k | 16–64 k |
| Data density | Low | Low | High | High | Very high | Very high |
| Machine readability | Good | Good | Expensive | Expensive | Good | Good |
| Readability by people | Limited | Simple | Simple | Difficult | Impossible | Impossible |
| Influence of dirt/damp | Very high | Very high | – | – | Possible (contacts) | No influence |
| Influence of (optical) covering | Total failure | Total failure | – | Possible | – | No influence |
| Influence of direction and position | Low | Low | – | – | Unidirectional | No influence |
| Degradation/wear | Limited | Limited | – | – | Contacts | No influence |
| Purchase cost/reading electronics | Very low | Medium | Very high | Very high | Low | Medium |
| Operating costs (e.g. printer) | Low | Low | None | None | Medium (contacts) | None |
| Unauthorised copying/modification | Slight | Slight | Possible* (audio tape) | Impossible | Impossible | Impossible |
| Reading speed (including handling of data carrier) | Low ~4 s | Low ~3 s | Very low >5 s | Very low >5–10 s | Low ~4 s | Very fast ~0.5 s |
| Maximum distance between data carrier and reader | 0–50 cm | <1 cm Scanner | 0–50 cm | Direct contact** | Direct contact | 0–5 m, microwave |

*The danger of 'replay' can be reduced by selecting the text to be spoken using a random generator, because the text that must be spoken is not known in advance.
**This only applies for fingerprint ID. In the case of retina or iris evaluation direct contact is not necessary or possible.

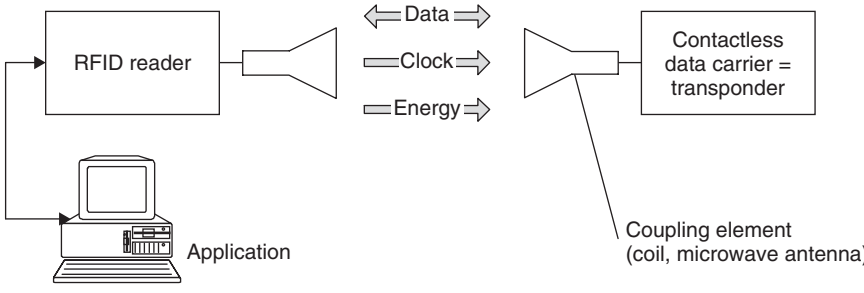


**Figure 1.6** The reader and transponder are the main components of every RFID system

**Figure 1.7** RFID reader and contactless smart card in practical use (reproduced by permission of Kaba Benzing GmbH)

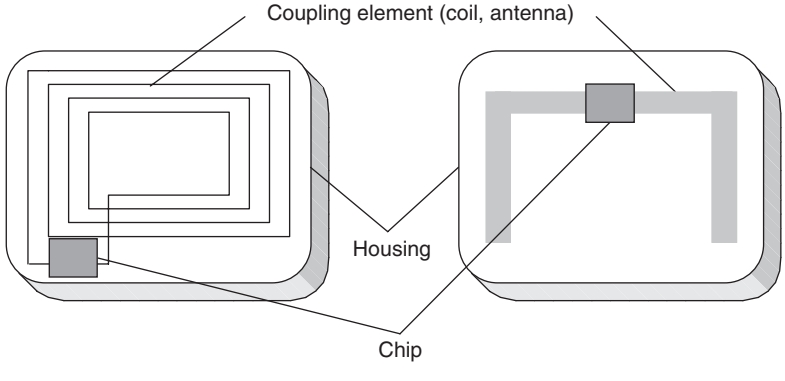


**Figure 1.8** Basic layout of the RFID data-carrying device, the transponder. Left, inductively coupled transponder with antenna coil; right, microwave transponder with dipolar antenna

A reader typically contains a radio frequency module (transmitter and receiver), a control unit and a coupling element to the transponder. In addition, many readers are fitted with an additional interface (RS 232, RS 485, etc.) to enable them to forward the data received to another system (PC, robot control system, etc.).

The transponder, which represents the actual *data-carrying device* of an RFID system, normally consists of a *coupling element* and an electronic *microchip*. When the transponder, which does not usually possess its own voltage supply (battery), is not within the interrogation zone of a reader it is totally passive. The transponder is only activated when it is within the interrogation zone of a reader. The power required to activate the transponder is supplied to the transponder through the coupling unit (contactless), as are the timing pulse and data.

# 2

# Differentiation Features of RFID Systems

## 2.1 Fundamental Differentiation Features

RFID systems exist in countless variants, produced by an almost equally high number of manufacturers. If we are to maintain an overview of RFID systems we must seek out features that can be used to differentiate one RFID system from another (Figure 2.1).

RFID systems operate according to one of two basic procedures: full-duplex (FDX)/half-duplex (HDX) systems, and sequential systems (SEQ).

In *full-duplex* and *half-duplex* systems the transponder's response is broadcast when the reader's RF field is switched on. Because the transponder's signal to the receiver antenna can be extremely weak in comparison with the signal from the reader itself, appropriate transmission procedures must be employed to differentiate the transponder's signal from that of the reader. In practice, data transfer from transponder to reader takes place using load modulation, load modulation using a subcarrier, and also (sub)harmonics of the reader's transmission frequency.

In contrast, *sequential procedures* employ a system whereby the field from the reader is switched off briefly at regular intervals. These gaps are recognised by the transponder and used for sending data from the transponder to the reader. The disadvantage of the sequential procedure is the loss of power to the transponder during the break in transmission, which must be smoothed out by the provision of sufficient auxiliary capacitors or batteries.

The data capacities of RFID transponders normally range from a few bytes to several kilobytes. So-called 1-bit transponders represent the exception to this rule. A data quantity of exactly 1-bit is just enough to signal two states to the reader: 'transponder in the field' or 'no transponder in the field'. However, this is perfectly adequate to fulfil simple monitoring or signalling functions. Because a 1-bit transponder does not need an electronic chip, these transponders can be manufactured for a fraction of a penny. For this reason, vast numbers of 1-bit transponders are used in *electronic article surveillance* (EAS) to protect goods in shops and businesses. If someone attempts to leave the shop with goods that have not been paid for the reader installed in the exit recognises the state 'transponder in the field' and initiates the appropriate reaction. The 1-bit transponder is removed or deactivated at the till when the goods are paid for.

The possibility of writing data to the transponder provides us with another way of classifying RFID systems. In very simple systems the transponder's data record, usually a simple (serial)

*RFID Handbook: Fundamentals and Applications in Contactless Smart Cards, Radio Frequency Identification and Near-Field Communication, Third Edition.* Klaus Finkenzeller
© 2010 John Wiley & Sons, Ltd

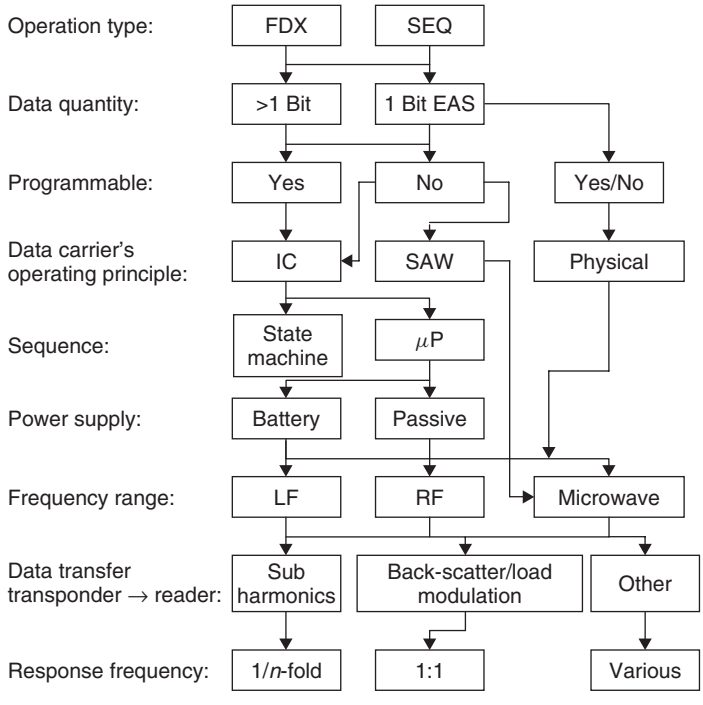


**Figure 2.1** The various features of RFID systems (reproduced by permission of Integrated Silicon Design Pty, Ltd)

number, is incorporated when the chip is manufactured and cannot be altered thereafter. In writable transponders, on the other hand, the reader can write data to the transponder. Three main procedures are used to store the data: in inductively coupled RFID systems EEPROMs (electrically erasable programmable read-only memory) are dominant. However, these have the disadvantages of high power consumption during the writing operation and a limited number of write cycles (typically of the order of 100 000–1000 000). FRAMs (ferromagnetic random access memory) have recently been used in isolated cases. The read power consumption of FRAMs is lower than that of EEPROMs by a factor of 100 and the writing time is 1000 times lower. Manufacturing problems have hindered its widespread introduction onto the market as yet.

Particularly common in microwave systems, SRAMs (static random access memory) are also used for data storage, and facilitate very rapid write cycles. However, data retention requires an uninterruptible power supply from an auxiliary battery.

In programmable systems, write and read access to the memory and any requests for write and read authorisation must be controlled by the data carrier's internal logic. In the simplest case these functions can be realised by a state machine (see Chapter 10 for further information). Very complex sequences can be realised using *state machines*. However, the disadvantage of state machines is their inflexibility regarding changes to the programmed functions, because such changes necessitate changes to the circuitry of the silicon chip. In practice, this means redesigning the chip layout, with all the associated expense.

The use of a microprocessor improves upon this situation considerably. An operating system for the management of application data is incorporated into the processor during manufacture using a mask. Changes are thus cheaper to implement and, in addition, the software can be specifically adapted to perform very different applications.

In the context of contactless smart cards, writable data carriers with a state machine are also known as 'memory cards', to distinguish them from 'processor cards'.

In this context, we should also mention transponders that can store data by utilising physical effects. This includes the read-only surface wave transponder and 1-bit transponders that can usually be deactivated (set to 0), but can rarely be reactivated (set to 1).

One very important feature of RFID systems is the *power supply* to the transponder. *Passive transponders* do not have their own power supply, and therefore all power required for the operation of a passive transponder must be drawn from the (electrical/magnetic) field of the reader. Conversely, *active transponders* incorporate a battery, which supplies all or part of the power for the operation of a microchip.

One of the most important characteristics of RFID systems is the *operating frequency* and the resulting range of the system. The operating frequency of an RFID system is the frequency at which the reader transmits. The transmission frequency of the transponder is disregarded. In most cases it is the same as the *transmission frequency* of the reader (load modulation, backscatter). However, the transponder's 'transmitting power' may be set several powers of ten lower than that of the reader.

The different transmission frequencies are classified into the three basic ranges, LF (low frequency, 30–300 kHz), HF (high frequency)/RF radio frequency (3–30 MHz) and UHF (ultra-high frequency, 300 MHz–3 GHz)/microwave (>3 GHz). A further subdivision of RFID systems according to range allows us to differentiate between close-coupling (0–1 cm), remote-coupling (0–1 m), and long-range (>1 m) systems.

The different procedures for sending data from the transponder back to the reader can be classified into three groups: (i) the use of reflection or backscatter (the frequency of the reflected wave corresponds with the transmission frequency of the reader → frequency ratio 1:1); or (ii) load modulation (the reader's field is influenced by the transponder → frequency ratio 1:1); and (iii) the use of subharmonics ($1/n$-fold) and the generation of harmonic waves ($n$-fold) in the transponder.

## 2.2 Transponder Construction Formats

### 2.2.1 Disks and Coins

The most common construction format is the so-called *disk* (coin), a transponder in a round (ABS) injection moulded housing, with a diameter ranging from a few millimetres to 10 cm (Figure 2.2). There is usually a hole for a fastening screw in the centre. As an alternative to (ABS) injection moulding, polystyrol or even epoxy resin may be used to achieve a wider operating temperature range.

### 2.2.2 Glass Housing

*Glass transponders* have been developed that can be injected under the skin of an animal for identification purposes (see Chapter 13).

Glass tubes of length just 12–32 mm contain a microchip mounted upon a carrier (PCB) and a chip capacitor to smooth the supply current obtained. The transponder coil incorporates wire of just 0.03 mm thickness wound onto a ferrite core. The internal components are embedded in a soft adhesive to achieve mechanical stability.

### 2.2.3 Plastic Housing

The *plastic housing* (*plastic package*, PP) was developed for applications involving particularly high mechanical demands. This housing can easily be integrated into other products, for example into *car keys* for *electronic immobilisation systems*.

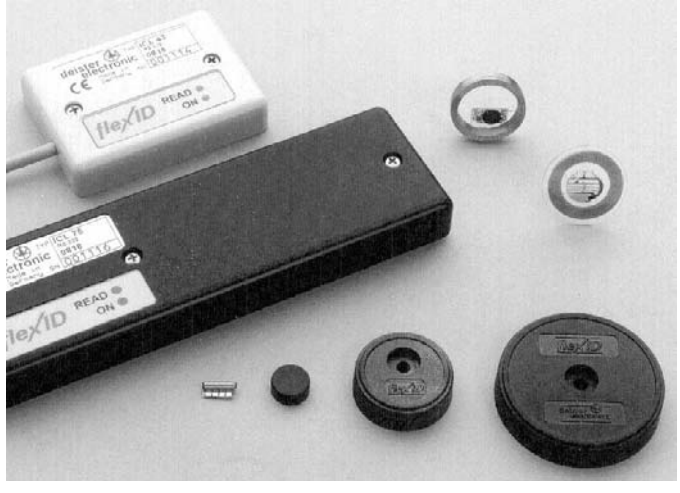


**Figure 2.2** Different construction formats of disk transponders. Right, transponder coil and chip prior to fitting in housing; left, different construction formats of reader antennas (reproduced by permission of Deister Electronic, Barsinghausen)

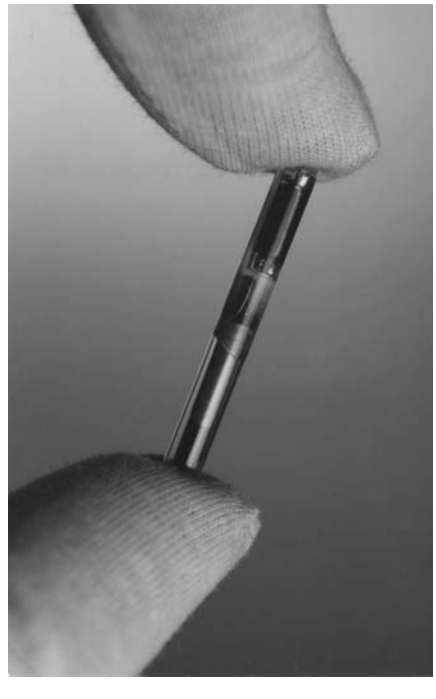

**Figure 2.3** Close-up of a 32 mm glass transponder for the identification of animals or further processing into other construction formats (reproduced by permission of Texas Instruments)

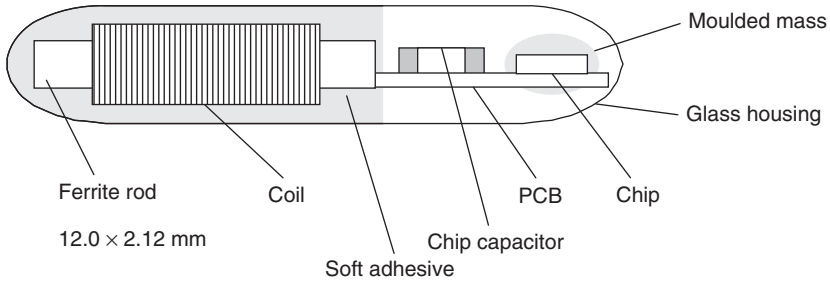


**Figure 2.4** Mechanical layout of a glass transponder

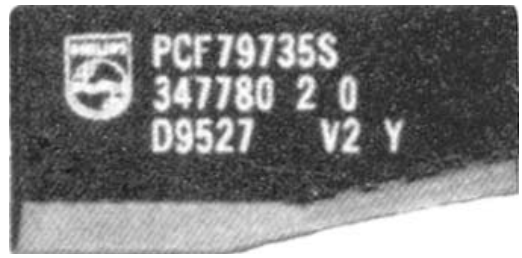


**Figure 2.5** Transponder in a plastic housing (reproduced by permission of Philips Electronics B.V)

The wedge made of moulding substance (IC casting compound) contains almost the same components as the glass transponder, but its longer coil gives it a greater functional range (Figure 2.6). Further advantages are its ability to accept larger microchips and its greater tolerance to mechanical vibrations, which is required by the automotive industry, for example. The *PP transponder* has proved completely satisfactory with regard to other quality requirements, such as temperature cycles or fall tests (Bruhnke, 1996).

## 2.2.4 Tool and Gas Bottle Identification

Special construction formats have been developed to install inductively coupled transponders into *metal surfaces*. The transponder coil is wound in a ferrite pot core. The transponder chip is mounted on the reverse of the *ferrite pot core* and contacted with the transponder coil.

In order to obtain sufficient mechanical stability, vibration and heat tolerance, transponder chip and ferrite pot core are cast into a PPS shell using epoxy resin (Link, 1996, 1997).

The external dimensions of the transponder and their fitting area have been standardised in DIN/ISO 69873 for incorporation into a retention knob or quick-release taper for tool identification. Different designs are used for the identification of gas bottles.

## 2.2.5 Keys and Key Fobs

Transponders are also integrated into mechanical keys for immobilisers or door locking applications with particularly high security requirements. These are generally based upon a transponder in a plastic housing, which is cast or injected into the key fob.

The keyring transponder design has proved very popular for systems providing access to office and work areas.

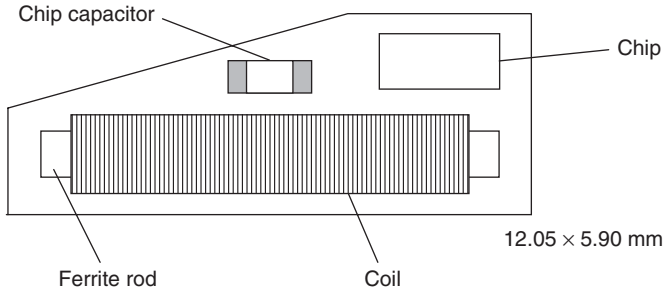


**Figure 2.6** Mechanical layout of a transponder in a plastic housing. The housing is just 3 mm thick

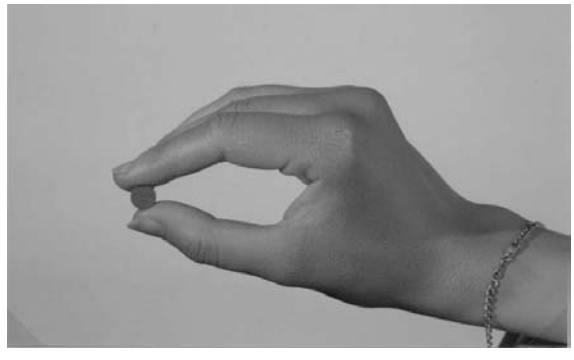

**Figure 2.7** Transponder in a standardised construction format in accordance with DIN/ISO 69873, for fitting into one of the retention knobs of a CNC tool (reproduced by permission of Leitz GmbH & Co., Oberkochen)

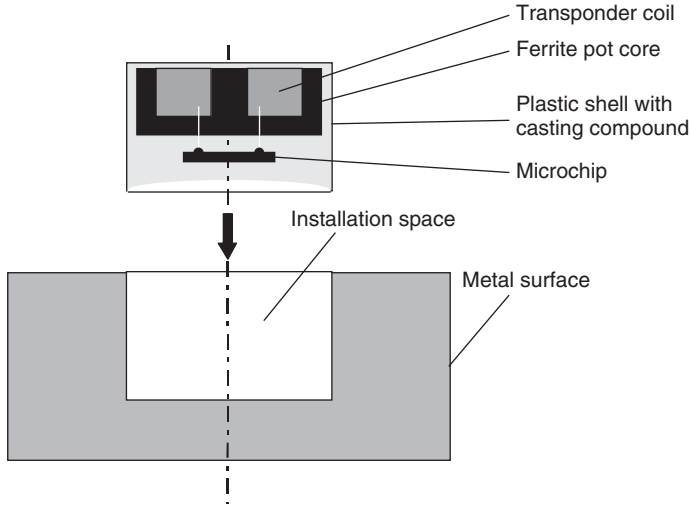


**Figure 2.8** Mechanical layout of a transponder for fitting into metal surfaces. The transponder coil is wound around a U-shaped ferrite core and then cast into a plastic shell. It is installed with the opening of the U-shaped core uppermost

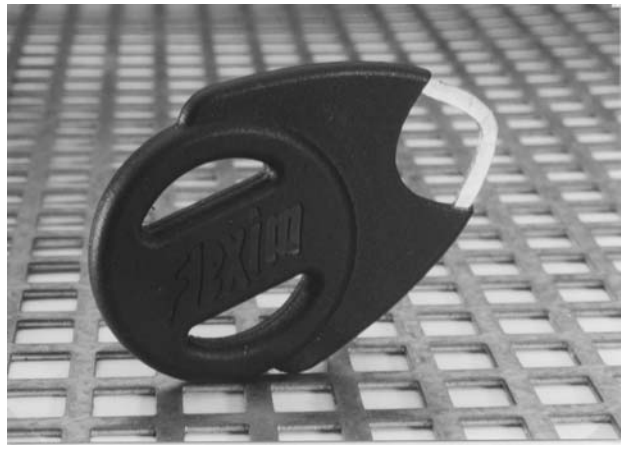

**Figure 2.9** Keyring transponder for an access system (reproduced by permission of Intermarketing)

## *2.2.6 Clocks*

This construction format was developed at the beginning of the 1990s by the Austrian company Ski-Data and was first used in ski passes. These *contactless clocks* were also able to gain ground in access control systems (Figure 2.10). The clock contains a frame antenna with a small number

**Figure 2.10** Watch with integral transponder in use in a contactless access authorisation system (reproduced by permission of Junghans Uhren GmbH, Schramberg)

of windings printed onto a thin printed circuit board, which follows the clock housing as closely as possible to maximise the area enclosed by the antenna coil – and thus the range.

### 2.2.7 ID-1 Format, Contactless Smart Cards

The ID-1 format familiar from credit cards and telephone cards ($85.72 \times 54.03 \times 0.76$ mm $\pm$ tolerances) is becoming increasingly important for *contactless smart cards* in RFID systems (Figure 2.11). One advantage of this format for inductively coupled RFID systems is the large coil area, which increases the range of the smart cards.

Contactless smart cards are produced by the lamination of a transponder between four PVC foils. The individual foils are baked at high pressure and temperatures above 100 °C to produce a permanent bond (the manufacture of contactless smart cards is described in detail in Chapter 12).

Contactless smart cards of the design ID-1 are excellently suited for carrying adverts and often have artistic overprints, like those on telephone cards, for example (Figure 2.12).

However, it is not always possible to adhere to the maximum thickness of 0.8 mm specified for ID-1 cards in ISO 7810. Microwave transponders in particular require a thicker design, because in

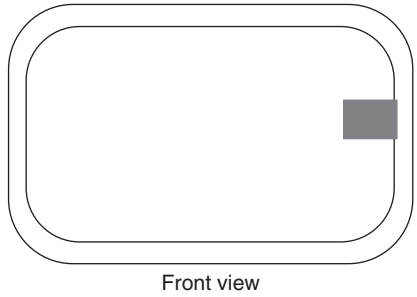


**Figure 2.11** Layout of a contactless smart card: card body with transponder module and antenna

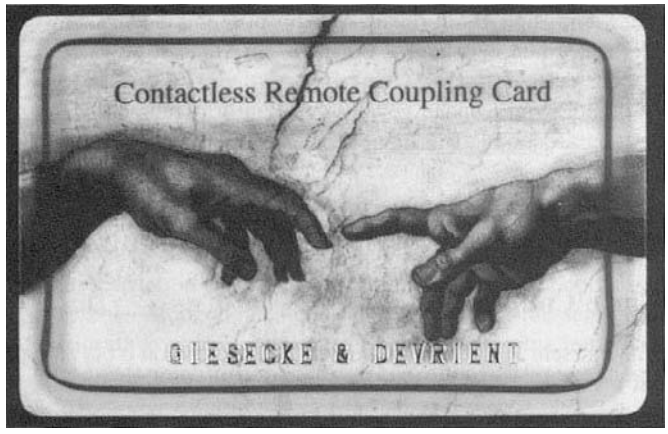


**Figure 2.12** Semitransparent contactless smart card. The transponder antenna can be clearly seen along the edge of the card (reproduced by permission of Giesecke & Devrient, Munich)

**Figure 2.13** Microwave transponders in plastic shell housings (reproduced by permission of Pepperl & Fuchs GmbH)

this design the transponder is usually inserted between two PVC shells or packed using an (ABS) injection moulding procedure.

## *2.2.8 Smart Label*

The term *smart label* refers to a paper-thin transponder format. In transponders of this format the transponder coil is applied to a plastic foil of just 0.1 mm thickness by *screen printing* or *etching*. This foil is often laminated using a layer of paper and its back coated with adhesive. The transponders are supplied in the form of self-adhesive stickers on an endless roll and are thin and flexible enough to be stuck to luggage, packages and goods of all types (Figures 2.14, 2.15). Since the

**Figure 2.14** Smart label transponders are thin and flexible enough to be attached to luggage in the form of a self-adhesive label (reproduced by permission of i-code-Transponder, Philips Semiconductors, A-Gratkorn)

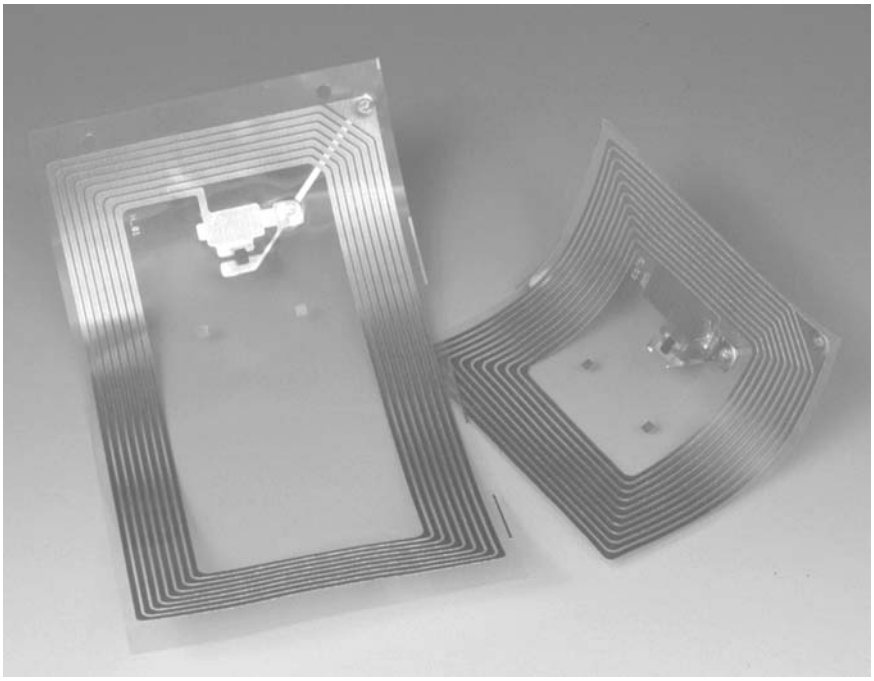

**Figure 2.15** A smart label primarily consists of a thin paper or plastic foil onto which the transponder coil and transponder chip can be applied (Tag-It Transponder, reproduced by permission of Texas Instruments, Friesing)

sticky labels can easily be overprinted, it is a simple matter to link the stored data to an additional barcode on the front of the label.

### *2.2.9 Coil-on-Chip*

In the construction formats mentioned previously the transponders consist of a separate transponder coil that functions as an antenna and a transponder chip (hybrid technology). The transponder coil is bonded to the transponder chip in the conventional manner.

An obvious step down the route of miniaturisation is the integration of the coil onto the chip (*coil-on-chip*, Figure 2.16). This is made possible by a special microgalvanic process that can take place on a normal CMOS wafer. The coil is placed directly onto the isolator of the silicon chip in the form of a planar (single layer) spiral arrangement and contacted to the circuit below by means of conventional openings in the passivation layer (Jurisch, 1995, 1998). The conductor track widths achieved lie in the range of 5–10 µm with a layer thickness of 15–30 µm. A final passivation onto a polyamide base is performed to guarantee the mechanical loading capacity of the contactless memory module based upon coil-on-chip technology.

The size of the silicon chip, and thus the entire transponder, is just 3 × 3 mm. The transponders are frequently embedded in a plastic shell for convenience and at ⌀6 × 1.5 mm are among the smallest RFID transponders available on the market.

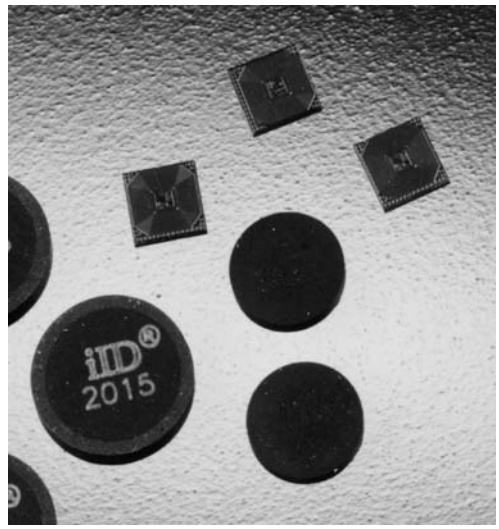


**Figure 2.16** Extreme miniaturisation of transponders is possible using coil-on-chip technology (reproduced by permission of Micro Sensys, Erfurt)

### *2.2.10 Other Formats*

In addition to these main designs, several application-specific special designs are also manufactured. Examples are the 'racing pigeon transponder' or the 'champion chip' for sports timing. Transponders can be incorporated into any design required by the customer. The preferred options are glass or PP transponders, which are then processed further to obtain the ultimate form.

## 2.3 Frequency, Range and Coupling

The most important differentiation criteria for RFID systems are the operating frequency of the reader, the physical coupling method and the range of the system. RFID systems are operated at widely differing frequencies, ranging from 135 kHz longwave to 5.8 GHz in the microwave range. *Electric, magnetic* and *electromagnetic fields* are used for the physical coupling. Finally, the achievable range of the system varies from a few millimetres to above 15 m.

RFID systems with a very small range, typically in the region of up to 1 cm, are known as *close-coupling systems*. For operation the transponder must either be inserted into the reader or positioned upon a surface provided for this purpose. Close-coupling systems are coupled using both electric and magnetic fields and can theoretically be operated at any desired frequency between DC and 30 MHz because the operation of the transponder does not rely upon the radiation of fields. The close coupling between data carrier and reader also facilitates the provision of greater amounts of power and so even a microprocessor with nonoptimal power consumption, for example, can be operated. Close-coupling systems are primarily used in applications that are subject to strict security requirements, but do not require a large range. Examples are electronic door locking systems or contactless smart card systems with payment functions. Close coupling transponders are currently used exclusively as ID-1 format contactless smart cards (ISO 10536). However, the role of close coupling systems on the market is becoming less important.

Systems with write and read ranges of up to 1 m are known by the collective term of remote coupling systems. Almost all *remote coupled systems* are based upon an *inductive (magnetic) coupling* between reader and transponder. These systems are therefore also known as *inductive radio systems*. In addition there are also a few systems with *capacitive (electric) coupling* (Baddeley and Ruiz, 1998). At least 90% of all RFID systems currently sold are inductively coupled systems. For this reason there is now an enormous number of such systems on the market. There is also a series of standards that specify the technical parameters of transponder and reader for various standard applications, such as contactless smart cards, animal identification or industrial automation. These also include *proximity coupling* (ISO 14443, *contactless smart cards*) and *vicinity coupling systems* (ISO 15693, *smart label* and contactless smart cards). Frequencies below 135 kHz or 13.56 MHz are used as transmission frequencies. Some special applications (e.g. Eurobalise) are also operated at 27.125 MHz.

RFID systems with ranges significantly above 1 m are known as *long-range systems*. All long-range systems operate using electromagnetic waves in the *UHF* and *microwave range*. The vast majority of such systems are also known as *backscatter systems* due to their physical operating principle. In addition, there are also long-range systems using *surface acoustic wave transponders* in the microwave range. All these systems are operated at the UHF frequencies of 868 MHz (Europe) and 915 MHz (USA) and at the microwave frequencies of 2.5 GHz and 5.8 GHz. Typical ranges of 3 m can now be achieved using passive (battery-free) backscatter transponders, while ranges of 15 m and above can even be achieved using active (battery-supported) backscatter transponders. The battery of an active transponder, however, never provides the power for data transmission between transponder and reader, but serves exclusively to supply the microchip and for the retention of stored data. The power of the electromagnetic field received from the reader is the only power used for the data transmission between transponder and reader.

In order to avoid reference to a possibly erroneous range figure, this book uses only the terms *inductively* or *capacitively coupled system* and *microwave system* or *backscatter system* for classification.

## 2.4 Active and Passive Transponders

An important distinction criterion of different RFID systems is how the energy supply of the transponder works. Here we distinguish between *passive* and *active transponders*. Passive transponders do not have any power supply. Through the transponder antenna, the magnetic or electromagnetic field of the reader provides all the energy required for operating the transponder. In order to transmit data from the transponder to the reader, the field of the reader can be modulated (e.g. by load modulation or modulated backscatter; see Section 3.2) or the transponder can intermediately store, for a short time, energy from the field of the reader (see Section 3.3). That means that the energy emitted by the reader is used for data transmission both from the reader to the transponder and back to the reader. If the transponder is located outside the reader's *range*, the transponder has no power supply at all and, therefore, will not be able to send signals.

Active transponders have their own energy supply, e.g. in form of a *battery* or a solar cell. Here the power supply is used to provide voltage to the chip. The magnetic or electromagnetic field received by the reader is therefore no longer necessary for the power supply of the chip. That means that the field may be much weaker than the field required for operating a passive transponder. This condition can substantially increase the *communication range* if the transponder is capable of detecting the weaker reader signal. But even an active RFID transponder is not able to generate a high-frequency signal of its own, but can only modulate the reader field in order to transmit data between transponder and reader, similar to the procedure in passive transponders. Thus, the energy from the transponder's own power supply does not contribute to data transmission from the transponder to the reader! In the literature, this type of transponder is often called *'semi-passive'*

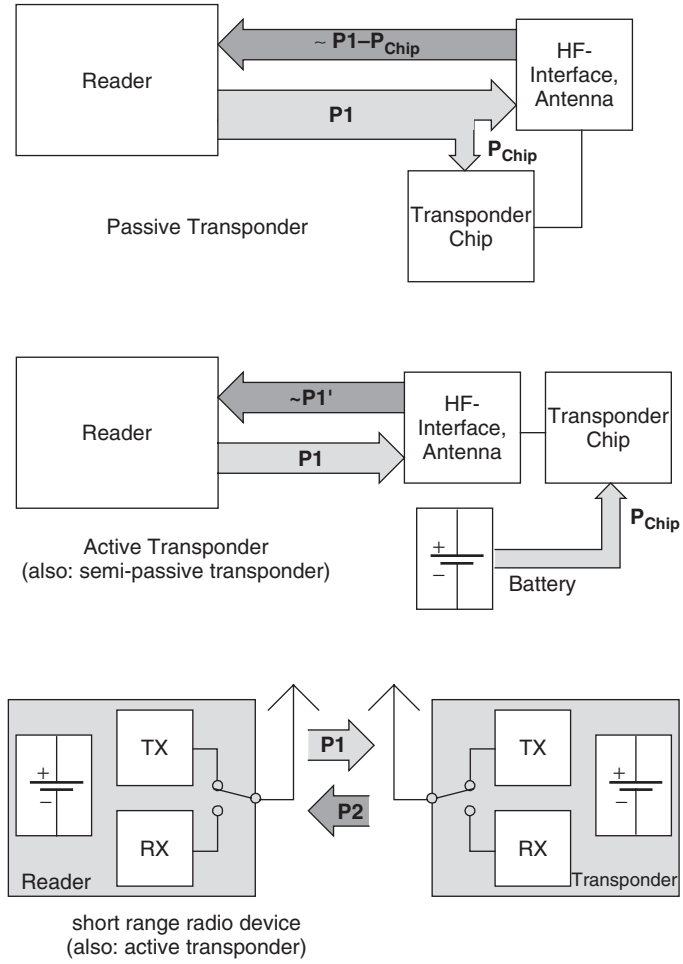


**Figure 2.17** Comparison between passive and active transponders

*transponder* (Kleist *et al*., 2004), which refers to the fact that this transponder is not able to generate a high-frequency signal.

As both passive and active (semi-active) RFID transponders need the reader's magnetic or electromagnetic field for transmitting data, there are physical limitations that substantially restrict the achievable reading ranges. Taking into account the permitted transmitting power of RFID readers, the maximum achievable range is 15 m, depending on the frequency band.

The circuit design of another class of active transponders corresponds to that of a classic radio device. These transponders have an active transmitter (TX) and often also a high-quality receiver (RX). In order to transmit data to a reader, a transmitter is switched on and the antenna emits a high-frequency electromagnetic field. A local energy source, e.g. a battery, supplies the transponder with power.

These transponders emit a high-frequency electromagnetic field instead of modulating the reader's field. From a pure technical perspective, these transponders are not genuine 'RFID' transponders, but *short-range radio devices (SRD)*. For several decades, similar devices have been used for data

transmission from remote places, for instance. Due to other physical mechanisms and taking into account the permitted transmitting power, short-range devices can have a range of up to several hundred metres. The larger the transmitting power, the larger the ranges that can be achieved, in comparison with conventional radio equipment.

In order to benefit from the continuing RFID boom, short-range devices are marketed as RFID devices. From a marketing perspective, this is a feasible approach. However, a technician should be always aware of the differences between RFID and short-range devices, as well as of the reasons behind the large range of SRD.

The RFID handbook does not include short-range devices as there is a large number of specialist literature on this topic. For an introduction, we recommend Bensky (2000).

## 2.5 Information Processing in the Transponder

If we classify RFID systems according to the range of information and data processing functions offered by the transponder and the size of its data memory, we obtain a broad spectrum of variants. The extreme ends of this spectrum are represented by low-end and high-end systems.

- *EAS systems (electronic article surveillance systems*; see Section 3.1) represent the bottom end of *low-end systems*. These systems check and monitor the possible presence of a transponder in the interrogation zone of a detection unit's reader using simple physical effects.
- *Read-only transponders* with a microchip are also classified as low-end systems. These transponders have a permanently encoded data set that generally consists only of a unique *serial number* (*unique number*) made up of several bytes. If a read-only transponder is placed in the RF field of a reader, the transponder begins to continuously broadcast its own serial number. It is not possible for the reader to address a read-only transponder – there is a unidirectional flow of data from the transponder to the reader. In practical operation of a read-only system, it is also necessary to ensure that there is only ever one transponder in the reader's interrogation zone, otherwise the two or more transponders simultaneously transmitting would lead to a data collision. The reader would no longer be able to detect the transponder. Despite this limitation, read-only transponders are excellently suited for many applications in which it is sufficient for one unique number to be read. Because of the simple function of a read-only transponder, the chip area can be minimised, thus achieving low power consumption, and a low manufacturing cost.

Read-only systems are operated at all frequencies available to RFID systems. The achievable ranges are generally very high thanks to the low power consumption of the microchip. Read-only systems are used where only a small amount of data is required or where they can replace the functionality of barcode systems, for example in the control of product flows, in the identification of pallets, containers and gas bottles (ISO 18000), but also in the identification of animals (ISO 11785).

- The mid-range is occupied by a variety of systems with writable data memory, which means that this sector has by far the greatest diversity of types. Memory sizes range from a few bytes to over 100 Kbyte EEPROM (passive transponder) or SRAM (active, i.e. transponder with battery backup). These transponders are able to process simple reader commands for the selective reading and writing of the data memory in a permanently encoded *state machine*. In general, the transponders also support *anticollision procedures*, so that several transponders located in the reader's interrogation zone at the same time do not interfere with one another and can be selectively addressed by the reader (see Section 7.2).

  Cryptological procedures, i.e. *authentication* between transponder and reader, and data stream encryption (see Chapter 8) are also common in these systems. These systems are operated at all frequencies available to RFID systems. The *high-end* segment is made up of systems with a

microprocessor and a smart card operating system (smart card OS). The use of microprocessors facilitates the realisation of significantly more complex encryption and authentication algorithms than would be possible using the hard-wired logic of a state machine. The top end of high-end systems is occupied by modern *dual interface smart cards* (see Section 10.2.1), which have a cryptographic *coprocessor*. The enormous reduction in computing times that results from the use of a coprocessor means that contactless smart cards can even be used in applications that impose high requirements on the secure encryption of the data transmission, such as electronic purse or ticketing systems for public transport. High-end systems are almost exclusively operated at the 13.56 MHz frequency. Data transmission between transponder and reader is described in the standard ISO 14443.

## 2.6 Selection Criteria for RFID Systems

There has been an enormous upsurge in the popularity of RFID systems in recent years. The best example of this phenomenon is the contactless smart cards used as electronic tickets for public transport. Five years ago it was inconceivable that tens of millions of contactless tickets would now be in use. The possible fields of application for contactless identification systems have also multiplied recently.

Developers of RFID systems have taken this development into account, with the result that countless systems are now available on the market. The technical parameters of these systems are optimised for various fields of application – *ticketing, animal identification, industrial automation* or *access control*. The technical requirements of these fields of application often overlap, which means that the clear classification of suitable systems is no simple matter. To make matters more

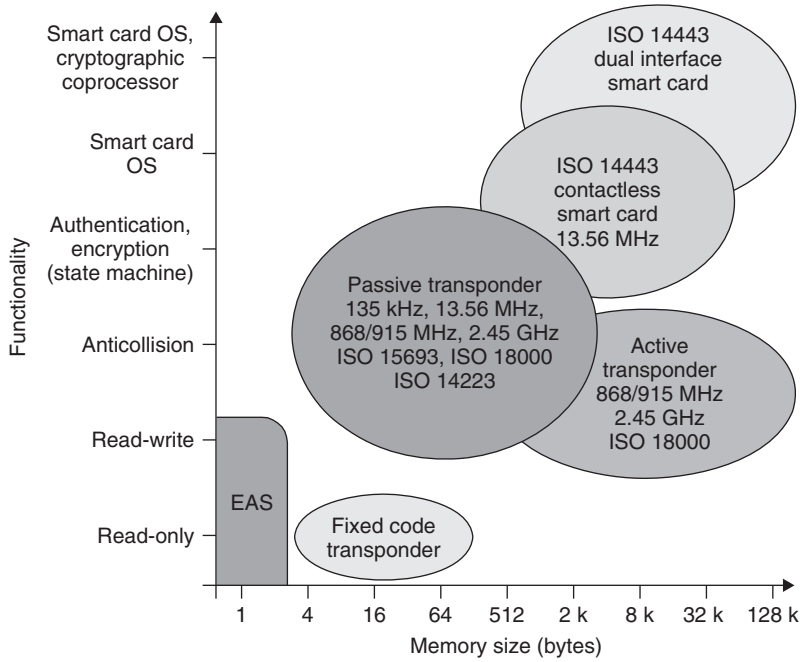


**Figure 2.18** RFID systems can be classified into low-end and high-end systems according to their functionality

difficult, apart from a few special cases (animal identification, close-coupling smart cards), no binding standards are as yet in place for RFID systems.

It is difficult even for a specialist to retain an overview of the range of RFID systems currently on offer. Therefore, it is not always easy for users to select the system best suited to their needs.

In what follows there are some points for consideration when selecting RFID systems.

### 2.6.1 Operating Frequency

RFID systems that use frequencies between approximately 100 kHz and 30 MHz operate using inductive coupling. By contrast, microwave systems in the frequency range 2.45–5.8 GHz are coupled using electromagnetic fields.

The specific *absorption rate* (damping) for water or nonconductive substances is lower by a factor of 100 000 at 100 kHz than it is at 1 GHz. Therefore, virtually no absorption or damping takes place. Lower-frequency RF systems are primarily used due to the better penetration of objects (Schürmann, 1994). An example of this is the bolus, a transponder placed in the omasum (rumen) of cattle, which can be read from outside at an interrogation frequency of <135 kHz.

Microwave systems have a significantly higher *range* than inductive systems, typically 2–15 m. However, in contrast to inductive systems, microwave systems require an additional backup battery. The transmission power of the reader is generally insufficient to supply enough power for the operation of the transponder.

Another important factor is sensitivity to *electromagnetic interference fields*, such as those generated by welding robots or strong electric motors. Inductive transponders are at a significant disadvantage here. Microwave systems have therefore particularly established themselves in the production lines and painting systems of the automotive industry. Other factors are the high memory capacity (up to 32 Kbyte) and the high temperature resistance (up to 250 °C) of microwave systems (Bachthaler, 1997).

### 2.6.2 Range

The required range of an application is dependent upon several factors:

- the positional accuracy of the transponder;
- the minimum distance between several transponders in practical operation;
- the speed of the transponder in the interrogation zone of the reader.

For example, in contactless payment applications – e.g. public transport tickets – the positioning speed is very low, since the transponder is guided to the reader by hand. The minimum distance between several transponders in this case corresponds to the distance between two passengers entering a vehicle. For such systems there is an optimal range of 5–10 cm. A greater range would only give rise to problems in this case, since several passengers' tickets might be detected by the reader simultaneously. This would make it impossible to allocate the ticket reliably to the correct passenger.

Different vehicle models of varying dimensions are often constructed simultaneously on the production lines of the automotive industry. Thus great variations in the distance between the transponder on the vehicle and the reader are pre-programmed (Bachthaler, 1997). The write/read distance of the RFID system used must therefore be designed for the maximum required range. The distance between the transponders must be such that only one transponder is ever within the interrogation zone of the reader at a time. In this situation, microwave systems in which the field has a *directional beam* offer clear advantages over the broad, nondirectional fields of inductively coupled systems.

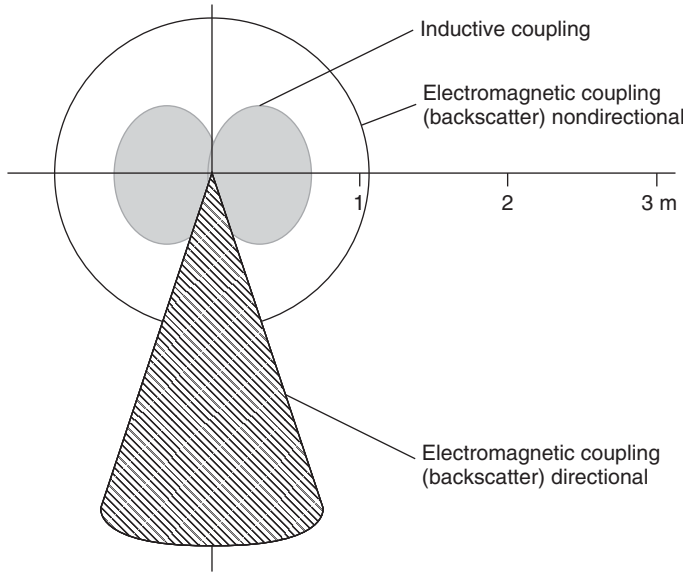


**Figure 2.19** Comparison of the relative interrogation zones of different systems

The speed of transponders, relative to readers, together with the maximum write/read distance, determines the length of time spent in the reader's interrogation zone. For the identification of vehicles, the required range of the RFID system is designed such that, at the maximum vehicle speed, the length of time spent in the interrogation zone is sufficient for the transmission of the required data.

### *2.6.3 Security Requirements*

*Security requirements* to be imposed on a planned RFID application, i.e. *encryption* and *authentication*, should be assessed very precisely to rule out any nasty surprises in the implementation phase. For this purpose, the incentive that the system represents to a potential attacker as a means of procuring money or material goods by manipulation should be evaluated. In order to be able to assess this attraction, we divide applications into two groups:

- industrial or closed applications;
- public applications connected with money and material goods.

This can be illustrated on the basis of two contrasting application examples. Let us once again consider an assembly line in the automotive industry as a typical example of an industrial or closed application. Only authorised persons have access to this RFID system, so the circle of potential attackers remains reasonably small. A malicious *attack* on the system by the alteration or falsification of the data on a transponder could bring about a critical malfunction in the operating sequence, but the attacker would not gain any personal benefit. The probability of an attack can thus be set equal to zero, meaning that even a cheap low-end system without security logic can be used.

Our second example is a ticketing system for use in public transport. Such a system, primarily data carriers in the form of contactless smart cards, is accessible to anyone. The circle of potential attackers is thus enormous. A successful attack on such a system could represent large-scale financial

damage to the public transport company in question, for example in the event of the organised sale of falsified travel passes, to say nothing of the damage to the company's image. For such applications a high-end transponder with authentication and encryption procedures is indispensable. For applications with maximum security requirements, for example banking applications with an electronic purse, only transponders with microprocessors should be used.

### *2.6.4 Memory Capacity*

The chip size of the data carrier – and thus the price class – is primarily determined by its *memory capacity*. Therefore, permanently encoded read-only data carriers are used in price-sensitive mass applications with a low local information requirement. However, only the identity of an object can be defined using such a data carrier. Further data is stored in the central database of the controlling computer. If data is to be written back to the transponder, a transponder with EEPROM or RAM memory technology is required.

EEPROM memories are primarily found in inductively coupled systems. Memory capacities of 16 bytes to 8 Kbytes are available. SRAM memory devices with a battery backup, on the other hand, are predominantly used in microwave systems. The memory capacities on offer range from 256 bytes to 64 Kbytes.

# 3

# Fundamental Operating Principles

This chapter describes the basic interaction between transponder and reader, in particular the power supply to the transponder and the data transfer between transponder and reader (Figure 3.1). For a more in-depth description of the physical interactions and mathematical models relating to inductive coupling or backscatter systems please refer to Chapter 4.

## 3.1 1-Bit Transponder

A bit is the smallest unit of information that can be represented and has only two states: 1 and 0. This means that only two states can be represented by systems based upon a *1-bit transponder*: 'transponder in interrogation zone' and 'no transponder in interrogation zone'. Despite this limitation, 1-bit transponders are very widespread – their main field of application is in electronic *anti-theft devices* in shops (*EAS*, electronic article surveillance).

An EAS system is made up of the following components: the antenna of a 'reader' or interrogator, the *security element* or *tag*, and an optional *deactivation device* for deactivating the tag after payment. In modern systems deactivation takes place when the price code is registered at the till. Some systems also incorporate an *activator*, which is used to reactivate the security element after deactivation (Gillert, 1997). The main performance characteristic for all systems is the recognition or *detection rate* in relation to the gate width (maximum distance between transponder and interrogator antenna).

The procedure for the inspection and testing of installed article surveillance systems is specified in the guideline VDI 4470 entitled 'Anti-theft systems for goods – detection gates. Inspection guidelines for customers'. This guideline contains definitions and testing procedures for the calculation of the detection rate and false alarm ratio. It can be used by the retail trade as the basis for sales contracts or for monitoring the performance of installed systems on an ongoing basis. For the product manufacturer, the 'Inspection guidelines for customers' represents an effective benchmark in the development and optimisation of integrated solutions for security projects (in accordance with VDI 4470).

### *3.1.1 Radio Frequency*

The *radio frequency (RF) procedure* is based upon LC resonant circuits adjusted to a defined resonant frequency $f_R$. Early versions employed inductive resistors made of wound enamelled copper wire with a soldered on capacitor in a plastic housing (*hard tag*). Modern systems employ coils

*RFID Handbook: Fundamentals and Applications in Contactless Smart Cards, Radio Frequency Identification and Near-Field Communication, Third Edition.* Klaus Finkenzeller
© 2010 John Wiley & Sons, Ltd

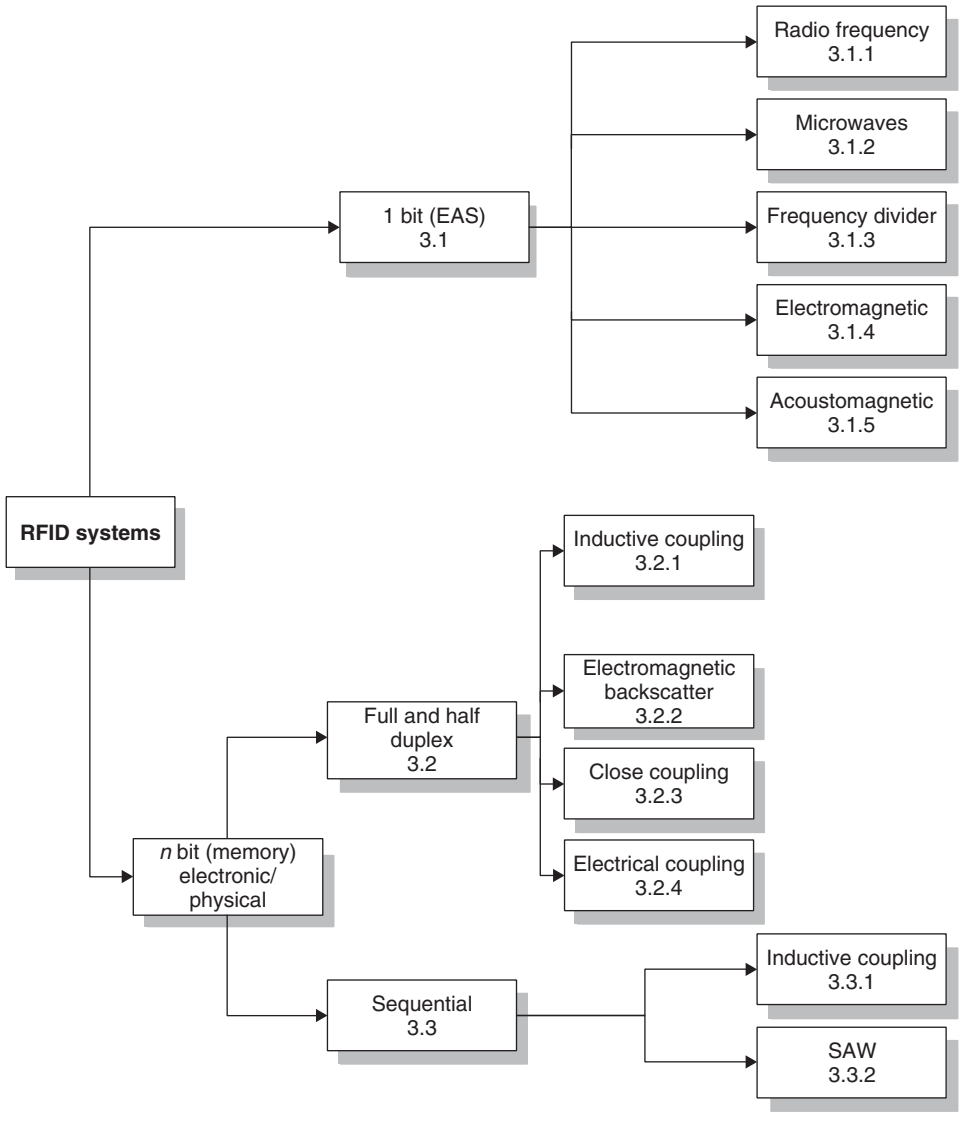


**Figure 3.1** The allocation of the different operating principles of RFID systems in the sections of this chapter

etched between foils in the form of stick-on labels. To ensure that the damping resistance does not become too high and reduce the quality of the resonant circuit to an unacceptable level, the thickness of the aluminium conduction tracks on the 25-µm-thick *polyethylene foil* must be at least 50 µm (Jörn, 1994). Intermediate foils of 10 µm thickness are used to manufacture the capacitor plates.

The reader (detector) generates a magnetic alternating field in the radio frequency range (Figure 3.2). If the LC resonant circuit is moved into the vicinity of the magnetic alternating field, energy from the alternating field can be induced in the resonant circuit via its coils (Faraday's law). If the frequency $f_G$ of the alternating field corresponds with the resonant frequency $f_R$ of the LC resonant circuit the resonant circuit produces a *sympathetic oscillation*. The current

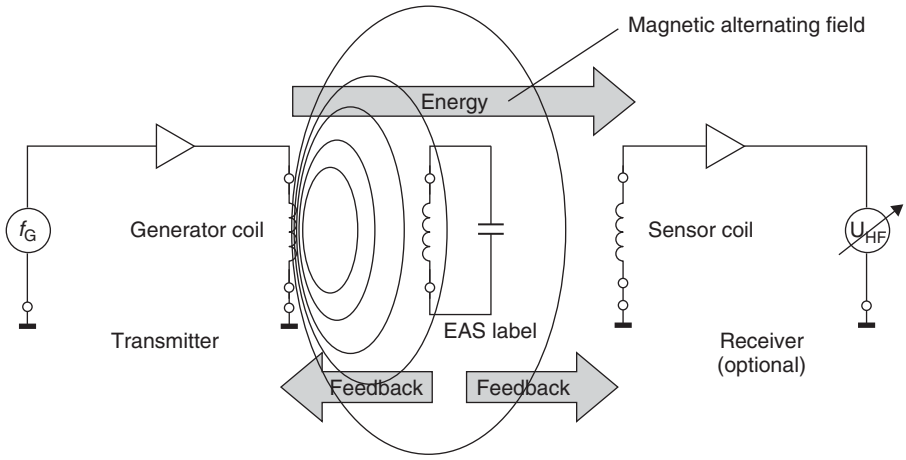


**Figure 3.2** Operating principle of the EAS radio frequency procedure

that flows in the resonant circuit as a result of this acts against its cause, i.e. it acts against the external magnetic alternating field (see Section 4.1.10.1). This effect is noticeable as a result of a small change in the voltage drop across the transmitter's generator coil and ultimately leads to a weakening of the measurable magnetic field strength. A change to the induced voltage can also be detected in an optional sensor coil as soon as a resonant oscillating circuit is brought into the magnetic field of the generator coil.

The relative magnitude of this dip is dependent upon the gap between the two coils (generator coil – security element, security element – sensor coil) and the quality $Q$ of the induced resonant circuit (in the security element).

The relative magnitude of the changes in voltage at the generator and sensor coils is generally very low and thus difficult to detect. However, the signal should be as clear as possible so that the security element can be reliably detected. This is achieved using a bit of a trick: the frequency of the magnetic field generated is not constant, it is 'swept'. This means that the generator frequency continuously crosses the range between minimum and maximum. The frequency range available to the swept systems is 8.2 MHz $\pm$ 10% (Jörn, 1994).

Whenever the swept generator frequency exactly corresponds with the resonant frequency of the resonant circuit (in the transponder), the transponder begins to oscillate, producing a clear dip in the voltages at the generator and sensor coils (Figure 3.3). Frequency tolerances of the security element, which depend upon manufacturing tolerances and vary in the presence of a metallic environment, no longer play a role as a result of the 'scanning' of the entire frequency range.

Because the tags are not removed at the till, they must be altered so that they do not activate the anti-theft system. To achieve this, the cashier places the protected product into a device – the deactivator – that generates a sufficiently high magnetic field that the induced voltage destroys the foil capacitor of the transponder. The capacitors are designed with intentional short-circuit points, so-called *dimples*. The breakdown of the capacitors is irreversible and detunes the resonant circuit to such a degree that this can no longer be excited by the *sweep signal*.

Large-area *frame antennas* are used to generate the required magnetic alternating field in the detection area. The frame antennas are integrated into columns and combined to form gates. The classic design that can be seen in every large department store is illustrated in Figure 3.4. Gate widths of up to 2 m can be achieved using the RF procedure. The relatively low detection rate of 70% (Gillert, 1997) is disproportionately influenced by certain product materials. Metals in

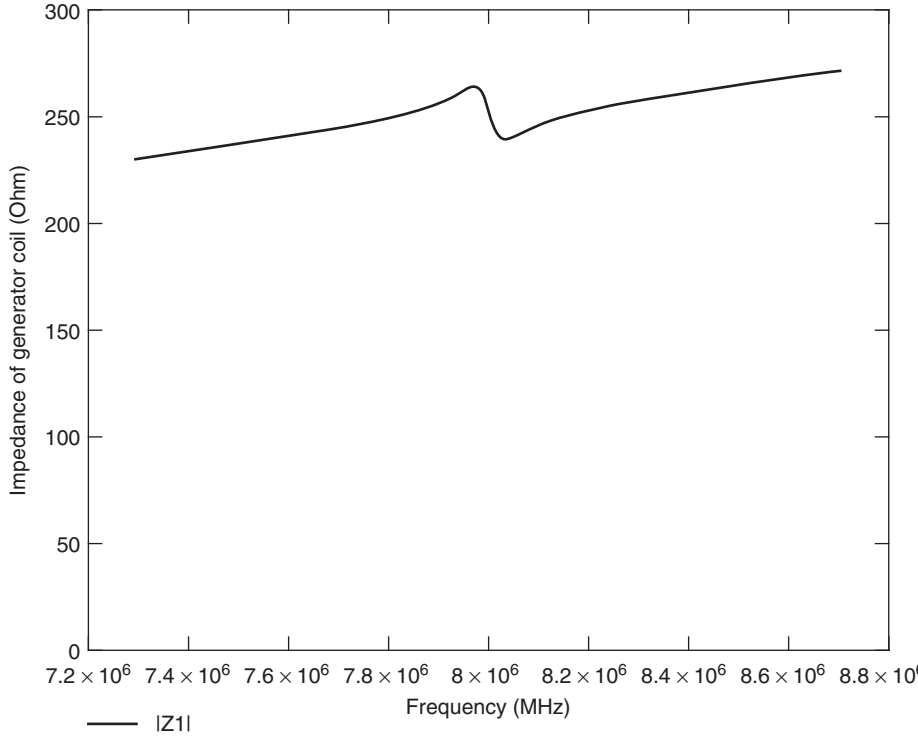


**Figure 3.3** The occurrence of an impedance 'dip' at the generator coil at the resonant frequency of the security element ($Q = 90, k = 1\,\%$). The generator frequency $f_G$ is continuously swept between two cut-off frequencies. An RF tag in the generator field generates a clear dip at its resonant frequency $f_R$

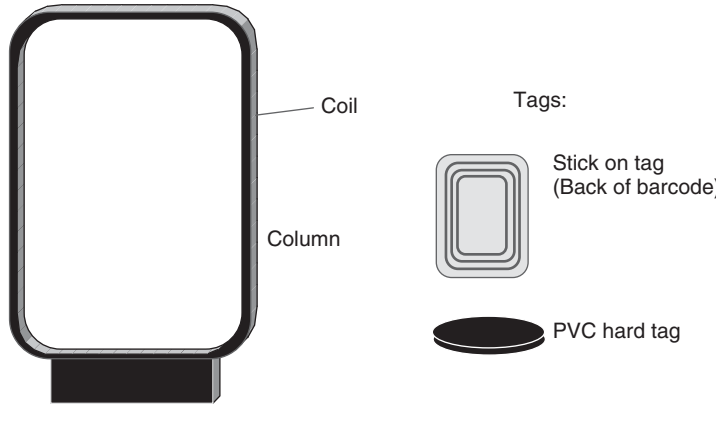


**Figure 3.4** Left, typical frame antenna of an RF system (height 1.20–1.60 m); right, tag designs

**Table 3.1** Typical system parameters for RF systems (VDI 4471)

| | |
|---|---|
| Quality factor $Q$ of the security element | >60–80 |
| Minimum deactivation field strength $H_D$ | 1.5 A/m |
| Maximum field strength in the deactivation range | 0.9 A/m |

**Table 3.2** Frequency range of different RF security systems (Plotzke *et al*., 1994)

| | System 1 | System 2 | System 3 | System 4 |
|---|---|---|---|---|
| Frequency (MHz) | 1.86–2.18 | 7.44–8.73 | 7.30–8.70 | 7.40–8.60 |
| Sweep frequency (Hz) | 141 | 141 | 85 | 85 |

particular (e.g. food tins) affect the resonant frequency of the tags and the coupling to the detector coil and thus have a negative effect on the detection rate. Tags of $50 \times 50$ mm must be used to achieve the gate width and detection rate mentioned above.

The range of products that have their own resonant frequencies (e.g. cable drums) presents a great challenge for system manufacturers. If these resonant frequencies lie within the sweep frequency 8.2 MHz ± 10% they will always trigger false alarms.

### *3.1.2 Microwaves*

EAS systems in the *microwave range* exploit the generation of harmonics at components with nonlinear characteristic lines (e.g. diodes). The *harmonic* of a sinusoidal voltage $A$ with a defined frequency $f_A$ is a sinusoidal voltage $B$, whose frequency $f_B$ is an integer multiple of the frequency $f_A$. The subharmonics of the frequency $f_A$ are thus the frequencies $2f_A$, $3f_A$, $4f_A$ etc. The $N$th multiple of the output frequency is termed the $N$th harmonic ($N$th harmonic wave) in radio engineering; the output frequency itself is termed the carrier wave or first harmonic.

In principle, every two-terminal network with a nonlinear characteristic generates harmonics at the first harmonic. In the case of *nonlinear resistances*, however, energy is consumed, so that only a small part of the first harmonic power is converted into the harmonic oscillation. Under favourable conditions, the multiplication of $f$ to $n \times f$ occurs with an efficiency of $\eta = 1/n^2$. However, if nonlinear energy storage is used for multiplication, then in the ideal case there are no losses (Fleckner, 1987).

*Capacitance diodes* are particularly suitable nonlinear energy stores for frequency multiplication. The number and intensity of the harmonics that are generated depend upon the capacitance diode's *dopant profile* and characteristic line gradient. The exponent $n$ (also $\gamma$) is a measure for the gradient (= capacitance–voltage characteristic). For simple diffused diodes, this is 0.33 (e.g. BA110), for alloyed diodes it is 0.5 and for tuner diodes with a hyper-abrupt P–N junction it is around 0.75 (e.g. BB 141; ITT, 1975).

The capacitance–voltage characteristic of alloyed capacitance diodes has a quadratic path and is therefore best suited for the doubling of frequencies. Simple diffused diodes can be used to produce higher harmonics (Fleckner, 1987).

The layout of a 1-bit transponder for the generation of harmonics is extremely simple: a capacitance diode is connected to the base of a *dipole* adjusted to the carrier wave (Figure 3.5). Given a carrier wave frequency of 2.45 GHz the dipole has a total length of 6 cm. The carrier wave frequencies used are 915 MHz (outside Europe), 2.45 GHz or 5.6 GHz. If the transponder is located within the transmitter's range, then the flow of current within the diode generates and re-emits harmonics of the carrier wave. Particularly distinctive signals are obtained at two or three times the carrier wave, depending upon the type of diode used.

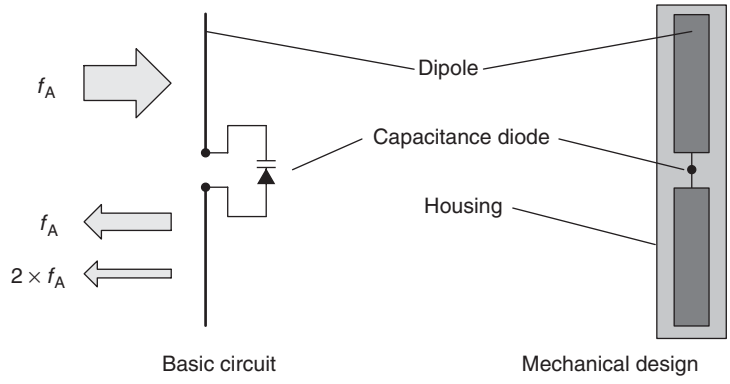


**Figure 3.5** Basic circuit and typical construction format of a microwave tag

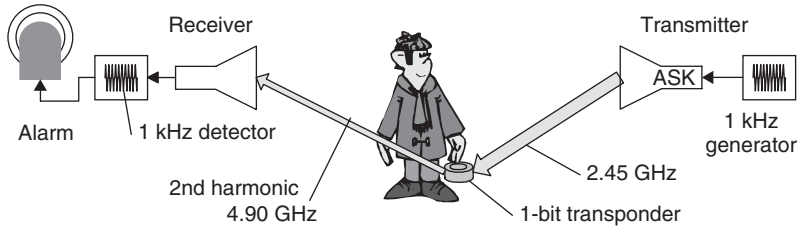


**Figure 3.6** Microwave tag in the interrogation zone of a detector

Transponders of this type cast in plastic (hard tags) are used mainly to protect textiles. The tags are removed at the till when the goods are paid for and they are subsequently reused.

Figure 3.6 shows a transponder being placed within the range of a microwave transmitter operating at 2.45 GHz. The second harmonic of 4.90 GHz generated in the diode characteristic of the transponder is retransmitted and detected by a receiver, which is adjusted to this precise frequency. The reception of a signal at the frequency of the second harmonic can then trigger an alarm system.

If the amplitude or frequency of the carrier wave is modulated (ASK, FSK), then all harmonics incorporate the same modulation. This can be used to distinguish between 'interference' and 'useful' signals, preventing false alarms caused by external signals. In the example above, the amplitude of the carrier wave is modulated with a signal of 1 kHz (100% ASK). The second harmonic generated at the transponder is also modulated at 1 kHz ASK. The signal received at the receiver is demodulated and forwarded to a 1 kHz detector. Interference signals that happen to be at the reception frequency of 4.90 GHz cannot trigger false alarms because these are not normally modulated and, if they are, they will have a different modulation.

### *3.1.3 Frequency Divider*

This procedure operates in the longwave range at 100–135.5 kHz. The security tags contain a semiconductor circuit (microchip) and a resonant circuit coil made of wound enamelled copper. The resonant circuit is made to resonate at the operating frequency of the EAS system using a soldered capacitor. These transponders can be obtained in the form of hard tags (plastic) and are removed when goods are purchased.

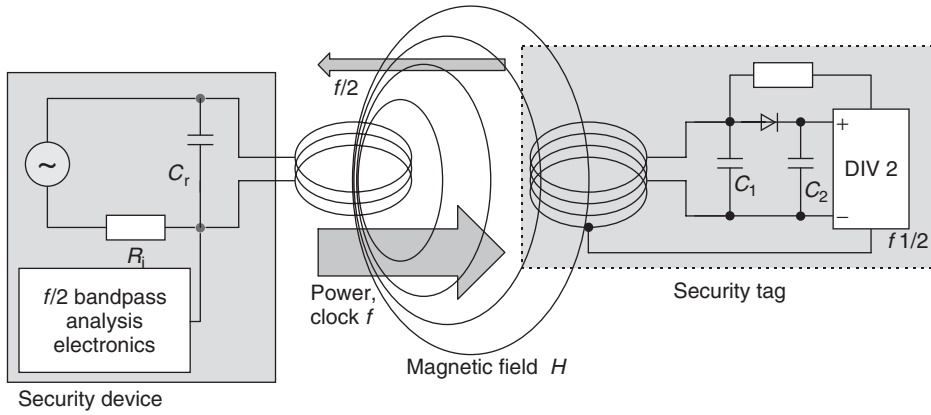


**Figure 3.7** Basic circuit diagram of the EAS frequency division procedure: security tag (transponder) and detector (evaluation device)

**Table 3.3** Typical system parameters (Plotzke *et al*., 1994)

| | |
|---|---|
| Frequency | 130 kHz |
| Modulation type | 100 % ASK |
| Modulation frequency/modulation signal | 12.5 or 25 Hz, rectangle 50 % |

The microchip in the transponder receives its power supply from the magnetic field of the security device (see Section 3.2.1.1). The frequency at the self-inductive coil is divided by two by the microchip and sent back to the security device. The signal at half the original frequency is fed by a tap into the resonant circuit coil.

The magnetic field of the security device is pulsed at a lower frequency (ASK modulated) to improve the detection rate. Similarly to the procedure for the generation of harmonics, the modulation of the carrier wave (ASK or FSK) is maintained at half the frequency (*subharmonic*). This is used to differentiate between 'interference' and 'useful' signals. This system almost entirely rules out false alarms.

Frame antennas, similar to those known from RF systems, are used as sensor antennas.

## *3.1.4 Electromagnetic Types*

*Electromagnetic types* operate using strong magnetic fields in the *NF range* from 10 Hz to around 20 kHz. The security elements contain a soft magnetic *amorphous metal* strip with a steep-flanked hysteresis curve (see also Section 4.1.12). The magnetisation of these strips is periodically reversed and the strips taken to magnetic saturation by a strong magnetic alternating field. The markedly nonlinear relationship between the applied field strength $H$ and the magnetic flux density $B$ near saturation (see also Figure 4.52), plus the sudden change of flux density $B$ in the vicinity of the zero crossover of the applied field strength $H$, generates harmonics at the basic frequency of the security device, and these harmonics can be received and evaluated by the security device.

The electromagnetic type is optimised by superimposing additional signal sections with higher frequencies over the main signal. The marked nonlinearity of the strip's hysteresis curve generates not only harmonics, but also signal sections with summation and differential frequencies of the

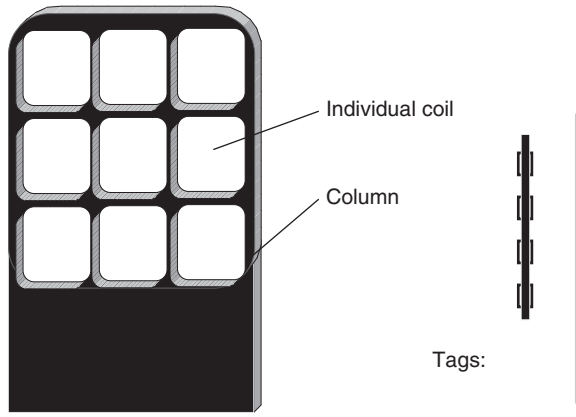


**Figure 3.8** Left, typical antenna design for a security system (height approximately 1.40 m); right, possible tag designs

supplied signals. Given a main signal of frequency $f_S = 20\,\text{Hz}$ and the additional signals $f_1 = 3.5$ and $f_2 = 5.3\,\text{kHz}$, the following signals are generated (first order):

$$f_1 + f_2 = f_{1+2} = 8.80\,\text{kHz}$$

$$f_1 - f_2 = f_{1-2} = 1.80\,\text{kHz}$$

$$f_S + f_1 = f_{S+1} = 3.52\,\text{kHz and so on}$$

The security device does not react to the harmonic of the basic frequency in this case, but rather to the summation or differential frequency of the extra signals.

The tags are available in the form of self-adhesive strips with lengths ranging from a few centimetres to 20 cm. Due to the extremely low operating frequency, electromagnetic systems are the only systems suitable for products containing metal. However, these systems have the disadvantage that the function of the tags is dependent upon position: for reliable detection the magnetic field lines of the security device must run vertically through the amorphous metal strip.

For deactivation, the tags are coated with a layer of hard magnetic metal or partially covered by hard magnetic plates. At the till the cashier runs a strong *permanent magnet* along the metal strip to deactivate the security elements (Plotzke *et al*., 1994). This magnetises the hard magnetic metal plates. The metal strips are designed such that the remanence field strength of the plate (see Section 4.1.12) is sufficient to keep the amorphous metal strips at saturation point so that the magnetic alternating field of the security system can no longer be activated.

The tags can be reactivated at any time by demagnetisation. The process of deactivation and reactivation can be performed any number of times. For this reason, electromagnetic goods protection systems were originally used mainly in lending libraries. Because the tags are small (minimum 32 mm strips) and cheap, these systems are now being used increasingly in the grocery industry (Figure 3.9).

In order to achieve the field strength necessary for demagnetisation of the permalloy strips, the field is generated by two coil systems in the columns at either side of a narrow passage. Several individual coils, typically 9 to 12, are located in the two pillars, and these generate weak magnetic fields in the centre and stronger magnetic fields on the outside (Plotzke *et al*., 1994). Gate widths of up to 1.50 m can now be realised using this method, while still achieving detection rates of 70% (Gillert, 1997).

**Figure 3.9** Electromagnetic labels in use (reproduced by permission of Schreiner Codedruck, Munich)

**Figure 3.10** Practical design of an antenna for an article surveillance system (reproduced by permission of META EAS System 2200, Esselte Meto, Hirschborn)

**Table 3.4** Typical system parameters (Plotzke *et al*., 1997)

| | |
|---|---|
| Frequency | 70 Hz |
| Optional combination frequencies of different systems | 12 Hz, 215 Hz, 3.3 kHz, 5 kHz |
| Field strength $H_{eff}$ in the detection zone | 25–120 A/m |
| Minimum field strength for deactivation | 16 000 A/m |

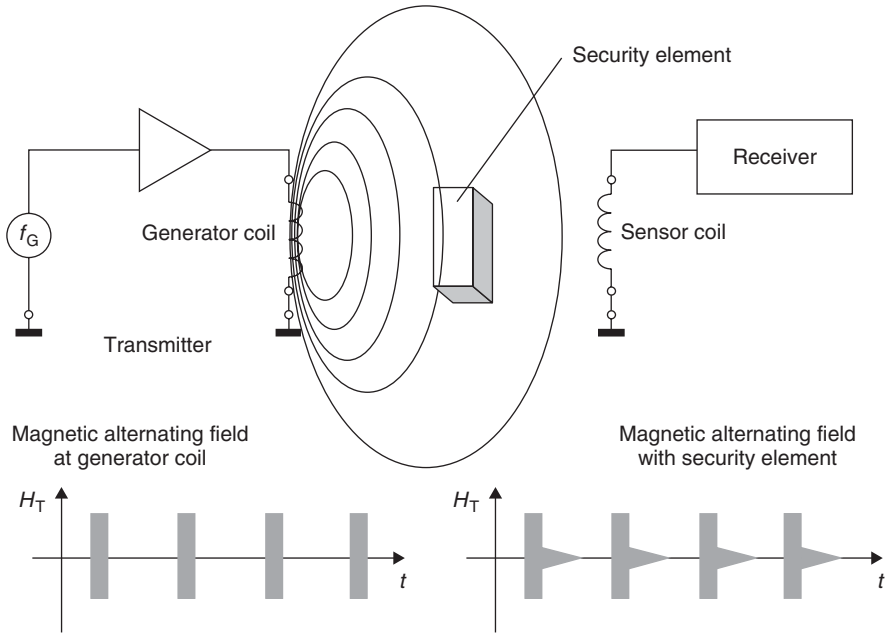


**Figure 3.11** Acoustomagnetic system comprising transmitter and detection device (receiver). If a security element is within the field of the generator coil this oscillates like a tuning fork in time with the pulses of the generator coil. The transient characteristics can be detected by an analysing unit

## *3.1.5 Acoustomagnetic*

Acoustomagnetic systems for security elements consist of extremely small plastic boxes around 40 mm long, 8–14 mm wide, depending upon design, and just 1 mm high. The boxes contain two metal strips, a *hard magnetic metal strip* permanently connected to the plastic box, plus a strip made of *amorphous metal*, positioned such that it is free to vibrate mechanically (Zechbauer, 1999).

*Ferromagnetic metals* (nickel, iron etc.) change slightly in length in a magnetic field under the influence of the field strength $H$. This effect is called *magnetostriction* and results from a small change in the interatomic distance as a result of magnetisation. In a magnetic alternating field a magnetostrictive metal strip vibrates in the longitudinal direction at the frequency of the field. The amplitude of the vibration is especially high if the frequency of the magnetic alternating field corresponds with that of the (acoustic) resonant frequency of the metal strip. This effect is particularly marked in amorphous materials.

The decisive factor is that the magnetostrictive effect is also reversible. This means that an oscillating magnetostrictive metal strip emits a magnetic alternating field. *Acoustomagnetic security systems* are designed such that the frequency of the magnetic alternating field generated precisely coincides with the resonant frequencies of the metal strips in the security element. The amorphous metal strip begins to oscillate under the influence of the magnetic field. If the magnetic alternating field is switched off after some time, the excited magnetic strip continues to oscillate for a while, like a tuning fork, and thereby itself generates a magnetic alternating field that can easily be detected by the security system.

The great advantage of this procedure is that the security system is not itself transmitting while the security element is responding and the detection receiver can thus be designed with a corresponding degree of sensitivity.

**Table 3.5** Typical operating parameters of acoustomagnetic systems (VDI 4471)

| Parameter | Typical value |
|---|---|
| Resonant frequency $f_0$ | 58 kHz |
| Frequency tolerance | ±0.52 % |
| Quality factor $Q$ | >150 |
| Minimum field strength $H_A$ for activation | >16 000 A/m |
| ON duration of the field | 2 ms |
| Field pause (OFF duration) | 20 ms |
| Decay process of the security element | 5 ms |

In their activated state, acoustomagnetic security elements are magnetised, i.e. the above-mentioned hard magnetic metal strip has a high remanence field strength and thus forms a permanent magnet. To deactivate the security element the hard magnetic metal strip must be demagnetised. This detunes the resonant frequency of the amorphous metal strip so it can no longer be excited by the operating frequency of the security system. The hard magnetic metal strip can only be demagnetised by a strong magnetic alternating field with a slowly decaying field strength. It is thus absolutely impossible for the security element to be manipulated by permanent magnets brought into the store by customers.

## 3.2 Full- and Half-Duplex Procedure

In contrast to 1-bit transponders, which normally exploit simple physical effects (oscillation stimulation procedures, stimulation of harmonic processes by the nonlinear characteristic of diodes or the nonlinear hysteresis curve of metals), the transponders described in this and subsequent sections use an electronic microchip as the data-carrying device. This has a data storage capacity of between a few bytes and more than 100 kilobytes. To read from or write to the data-carrying device it must be possible to transfer data between the reader and the transponder and then back from the transponder to the reader. This transfer takes place according to one of two main procedures: full-duplex and half-duplex procedures, which are described in this section, and sequential systems, which are described in the following section.

In the *half-duplex procedure* (HDX) the data transfer from the transponder to the reader alternates with data transfer from the reader to the transponder. At frequencies below 30 MHz this is most often used with the load modulation procedure, either with or without a subcarrier, which involves very simple circuitry. Closely related to this is the modulated reflected cross-section procedure that is familiar from radar technology and is used at frequencies above 100 MHz. Load modulation and modulated reflected cross-section procedures directly influence the magnetic or electromagnetic field generated by the reader and belong therefore among the *harmonic* procedures.

In the *full-duplex procedure* (FDX) the data transfer from the transponder to the reader (up-link) takes place at the same time as the data transfer from the reader to the transponder (down-link). This includes procedures in which data is transmitted from the transponder at a fraction of the frequency of the reader, i.e. a *subharmonic*, or at a completely independent, i.e. an *anharmonic*, frequency.

However, both procedures have in common the fact that the transfer of energy from the reader to the transponder is continuous, i.e. it is independent of the direction of data flow. In sequential systems (SEQ), on the other hand, the transfer of energy from the transponder to the reader takes place for a limited period of time only (pulse operation → *pulsed system*). Data transfer from the transponder to the reader occurs in the pauses between the power supply to the transponder.

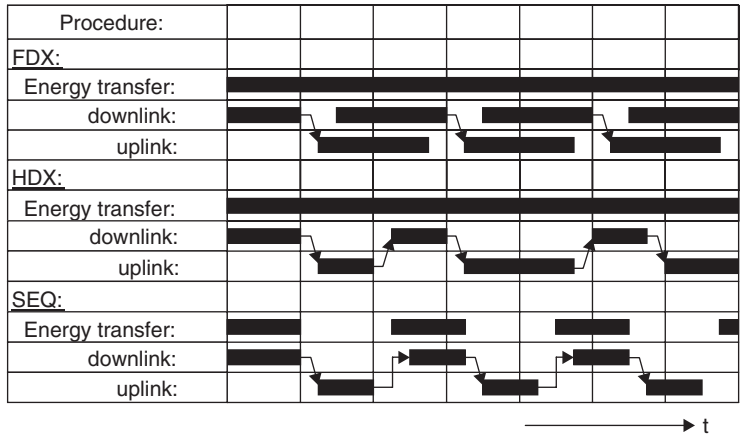


**Figure 3.12** Representation of full-duplex, half-duplex and sequential systems over time. Data transfer from the reader to the transponder is termed down-link, while data transfer from the transponder to the reader is termed up-link

Unfortunately, the literature relating to RFID has not yet been able to agree a consistent nomenclature for these system variants. Rather, there has been a confusing and inconsistent classification of individual systems into full- and half-duplex procedures. Thus pulsed systems are often termed half-duplex systems – this is correct from the point of view of data transfer – and all unpulsed systems are falsely classified as full-duplex systems. For this reason, in this book pulsed systems – for differentiation from other procedures, and unlike most RFID literature(!) – are termed sequential systems (SEQ).

## *3.2.1 Inductive Coupling*

### 3.2.1.1 Power Supply to Passive Transponders

An inductively coupled transponder comprises an electronic data-carrying device, usually a single microchip, and a large-area coil or conductor loop that functions as an antenna.

Inductively coupled transponders are almost always operated passively. This means that all the energy needed for the operation of the microchip has to be provided by the reader (Figure 3.13). For this purpose, the reader's antenna coil generates a strong, high-frequency electromagnetic field, which penetrates the cross-section of the coil area and the area around the coil. Because the wavelength of the frequency range used (<135 kHz: 2400 m, 13.56 MHz: 22.1 m) is several times greater than the distance between the reader's antenna and the transponder, the electromagnetic field may be treated as a simple magnetic alternating field with regard to the distance between transponder and antenna (see Section 4.2.1.1 for further details).

A small part of the emitted field penetrates the antenna coil of the transponder, which is some distance away from the coil of the reader. A voltage $U_i$ is generated in the transponder's antenna coil by inductance. This voltage is rectified and serves as the power supply for the data-carrying device (microchip).

A capacitor $C_r$ is connected in parallel with the reader's antenna coil, the capacitance of this capacitor being selected such that it works with the coil inductance of the antenna coil to form a

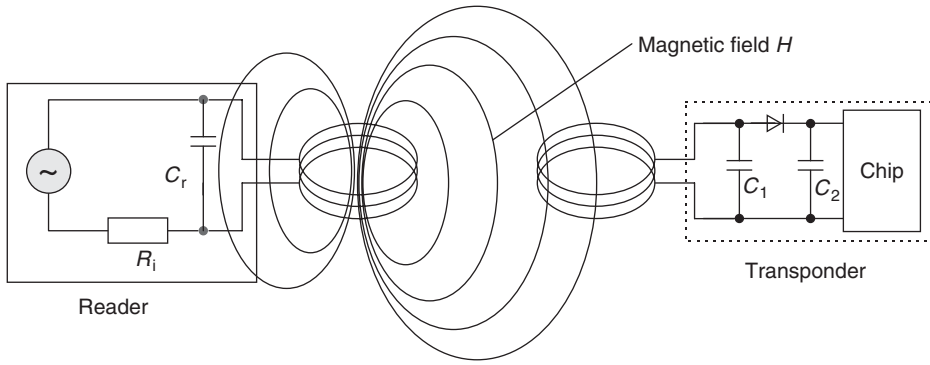


**Figure 3.13** Power supply to an inductively coupled transponder from the energy of the magnetic alternating field generated by the reader

**Figure 3.14** Different designs of inductively coupled transponders. The photo shows half-finished transponders, i.e. transponders before injection into a plastic housing (reproduced by permission of AmaTech GmbH & Co. KG, D-Pfronten)

parallel resonant circuit with a resonant frequency that corresponds with the transmission frequency of the reader. Very high currents can be generated in the antenna coil of the reader by resonance step-up in the parallel resonant circuit, which can be used to generate the required field strengths for the operation of the remote transponder.

The antenna coil of the transponder and the capacitor $C_1$ form a resonant circuit tuned to the transmission frequency of the reader. The voltage $U$ at the transponder coil reaches a maximum due to resonance step-up in the parallel resonant circuit.

The layout of the two coils can also be interpreted as a transformer (*transformer coupling*), in which case there is only a very weak coupling between the two windings. The efficiency of power transfer between the antenna coil of the reader and the transponder is proportional to the operating

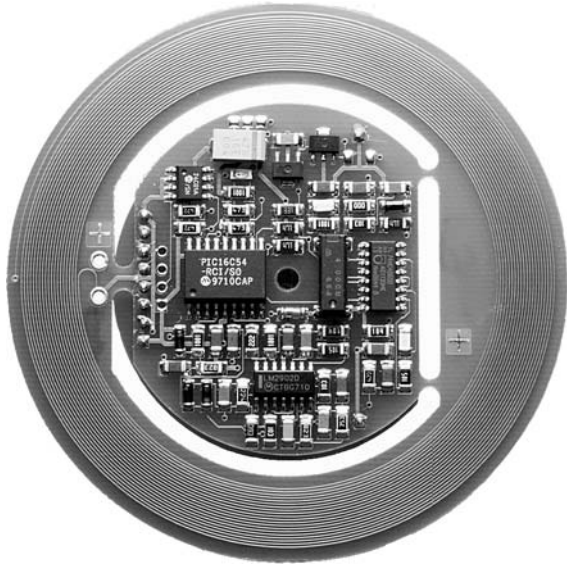


**Figure 3.15** Reader for inductively coupled transponder in the frequency range <135 kHz with integral antenna (reproduced by permission of easy-key System, micron, Halbergmoos)

**Table 3.6** Overview of the power consumption of various RFID-ASIC building blocks (Atmel, 1994). The minimum supply voltage required for the operation of the microchip is 1.8 V, the maximum permissible voltage is 10 V (Atmel, 1994)

| | Memory (bytes) | Write/read distance(cm) | Power consumption | Frequency | Application |
|---|---|---|---|---|---|
| ASIC#1 | 6 | 15 | 10 µA | 120 kHz | Animal ID |
| ASIC#2 | 32 | 13 | 600 µA | 120 kHz | Goods flow, access check |
| ASIC#3 | 256 | 2 | 6 µA | 128 kHz | Public transport |
| ASIC#4 | 256 | 0.5 | <1 mA | 4 MHz* | Goods flow, public transport |
| ASIC#5 | 256 | <2 | ~1 mA | 4/13.56 MHz | Goods flow |
| ASIC#6 | 256 | 100 | 500 µA | 125 kHz | Access check |
| ASIC#7 | 2048 | 0.3 | <10 mA | 4.91 MHz* | Contactless chip cards |
| ASIC#8 | 1024 | 10 | ~1 mA | 13.56 MHz | Public transport |
| ASIC#9 | 8 | 100 | <1 mA | 125 kHz | Goods flow |
| ASIC#10 | 128 | 100 | <1 mA | 125 kHz | Access check |

*Close-coupling system.

frequency $f$, the number of windings $n$, the area $A$ enclosed by the transponder coil, the angle of the two coils relative to each other and the distance between the two coils.

As frequency $f$ increases, the required coil inductance of the transponder coil, and thus the number of windings $n$ decreases (135 kHz: typical 100–1000 windings, 13.56 MHz: typical 3–10 windings). Because the voltage induced in the transponder is still proportional to frequency $f$ (see Chapter 4), the reduced number of windings barely affects the efficiency of power transfer at higher frequencies.

#### 3.2.1.2 Data Transfer Transponder → Reader

##### *3.2.1.2.1 Load Modulation*

As described above, inductively coupled systems are based upon a *transformer-type coupling* between the primary coil in the reader and the secondary coil in the transponder. This is true when the distance between the coils does not exceed $(\lambda/2\pi)$ $0.16\lambda$, so that the transponder is located in the *near field* of the transmitter antenna (for a more detailed definition of the near and far fields, please refer to Section 4.2.1.1).

If a resonant transponder (i.e. a transponder with a self-resonant frequency corresponding with the transmission frequency of the reader) is placed within the magnetic alternating field of the reader's antenna, the transponder draws energy from the magnetic field. The resulting feedback of the transponder on the reader's antenna can be represented as *transformed impedance* $Z_T$ in the antenna coil of the reader. Switching a *load resistor* on and off at the transponder's antenna therefore brings about a change in the impedance $Z_T$, and thus voltage changes at the reader's antenna (see Section 4.1.10.3). This has the effect of an amplitude modulation of the voltage $U_L$ at the reader's antenna coil by the remote transponder. If the timing with which the load resistor is switched on and off is controlled by data, this data can be transferred from the transponder to the reader. This type of data transfer is called *load modulation*.

To reclaim the data at the reader, the voltage tapped at the reader's antenna is rectified. This represents the demodulation of an amplitude modulated signal. An example circuit is shown in Section 11.3.1.

If the transponder leaves the near-field, i.e. the range $< \lambda/2\pi(0.16\ \lambda)$, the transformer coupling between reader antenna and the transponder antenna will be lost with the transition into the far-field. Therefore, load modulation is not possible any longer in the far-field. This does not mean, though, that data transmission from the transponder to the reader is, in principle, not possible. With the transition into the far-field, the mechanism of the backscatter coupling (see Section 3.2.2) becomes effective. In practice, data transmission to the reader usually fails because of the low efficiency of the transponder antennas (i.e. the low antenna gain) in the far-field.

##### *3.2.1.2.2 Load Modulation with Subcarrier*

Due to the weak coupling between the reader antenna and the transponder antenna, the voltage fluctuations at the antenna of the reader that represent the useful signal are smaller by orders of magnitude than the output voltage of the reader. In practice, for a 13.56 MHz system, given an antenna voltage of approximately 100 V (voltage step-up by resonance) a useful signal of around 10 mV can be expected (= 80 dB signal/noise ratio). Because detecting this slight voltage change requires highly complicated circuitry, the modulation sidebands created by the amplitude modulation of the antenna voltage are utilised.

If the additional load resistor in the transponder is switched on and off at a very high elementary frequency $f_S$, then two spectral lines are created at a distance of $\pm f_S$ around the transmission frequency of the reader $f_{READER}$, and these can be easily detected (however $f_S$ must be less than $f_{READER}$). In the terminology of radio technology the new elementary frequency is called a *subcarrier*). Data transfer is by ASK, FSK or PSK modulation of the subcarrier in time with the data flow. This represents an amplitude modulation of the subcarrier.

Load modulation with a subcarrier creates two modulation sidebands at the reader's antenna at the distance of the subcarrier frequency around the operating frequency $f_{READER}$. These modulation sidebands can be separated from the significantly stronger signal of the reader by bandpass (BP) filtering on one of the two frequencies $f_{READER} \pm f_S$. Once it has been amplified, the subcarrier signal is now very simple to demodulate.

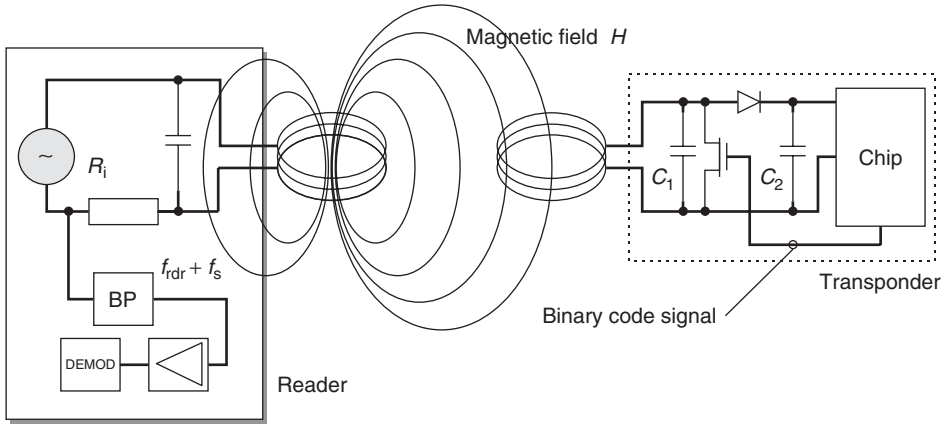


**Figure 3.16** Generation of load modulation in the transponder by switching the drain–source resistance of an FET on the chip. The reader illustrated is designed for the detection of a subcarrier

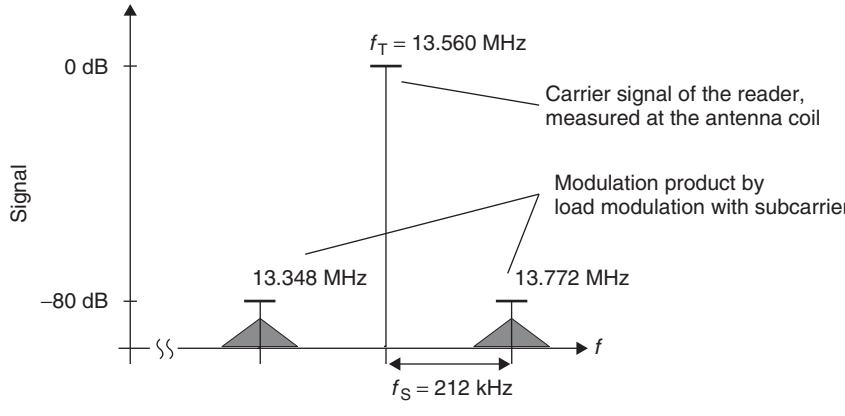


**Figure 3.17** Load modulation creates two sidebands at a distance of the subcarrier frequency $f_S$ around the transmission frequency of the reader. The actual information is carried in the sidebands of the two subcarrier sidebands, which are themselves created by the modulation of the subcarrier

Load modulation with subcarriers is mainly limited to the frequency range 13.56 MHz. Typical subcarrier frequencies are 212 kHz, 424 kHz (e.g. ISO/IEC 15 693) and 848 kHz (e.g. ISO/IEC 14443).

#### *3.2.1.2.3 Example Circuit–Load Modulation with Subcarrier*

Figure 3.18 shows an example circuit for a transponder using load modulation with a subcarrier. The circuit is designed for an operating frequency of 13.56 MHz and generates a subcarrier of 212 kHz.

The voltage induced at the antenna coil L1 by the magnetic alternating field of the reader is rectified using the bridge rectifier (D1–D4) and after additional smoothing (C1) is available to the circuit as supply voltage. The parallel regulator (ZD 5V6) prevents the supply voltage from being subject to an uncontrolled increase when the transponder approaches the reader antenna.

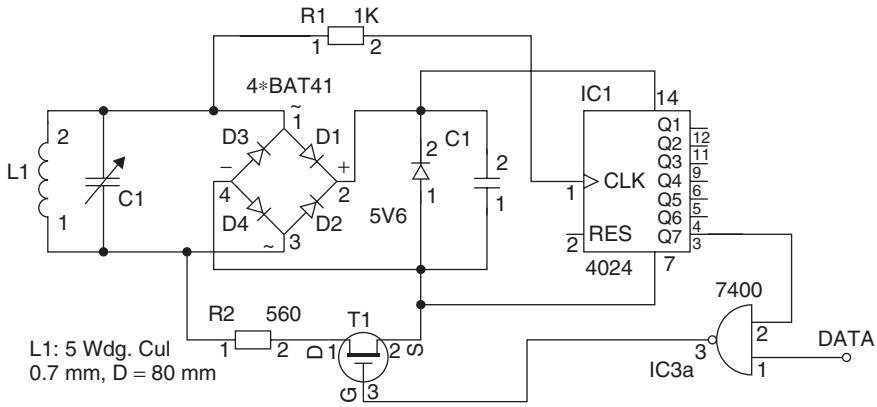


**Figure 3.18** Example circuit for the generation of load modulation with subcarrier in an inductively coupled transponder

Part of the high frequency antenna voltage (13.56 MHz) travels to the frequency divider's timing input (CLK) via the protective resistor (R1) and provides the transponder with the basis for the generation of an internal clocking signal. After division by $2^6 (= 64)$ a subcarrier clocking signal of 212 kHz is available at output Q7. The subcarrier clocking signal, controlled by a serial data flow at the data input (DATA), is passed to the switch (T1). If there is a logical HIGH signal at the data input (DATA), then the subcarrier clocking signal is passed to the switch (T1). The load resistor (R2) is then switched on and off in time with the subcarrier frequency.

Optionally in the circuit depicted, the transponder resonant circuit can be brought into resonance with the capacitor C1 at 13.56 MHz. The range of this 'minimal transponder' can be significantly increased in this manner.

#### *3.2.1.2.4 Subharmonic Procedure*

The subharmonic of a sinusoidal voltage $A$ with a defined frequency $f_A$ is a sinusoidal voltage $B$, whose frequency $f_B$ is derived from an integer division of the frequency $f_A$. The subharmonics of the frequency $f_A$ are therefore the frequencies $f_A/2$, $f_A/3$, $f_A/4 \ldots$.

In the subharmonic transfer procedure, a second frequency $f_B$, which is usually lower by a factor of two, is derived by digital division by two of the reader's transmission frequency $f_A$. The output signal $f_B$ of a binary divider can now be modulated with the data stream from the transponder. The modulated signal is then fed back into the transponder's antenna via an output driver.

One popular operating frequency for subharmonic systems is 128 kHz. This gives rise to a transponder response frequency of 64 kHz.

The transponder's antenna consists of a coil with a central tap, whereby the power supply is taken from one end. The transponder's return signal is fed into the coil's second connection (Figure 3.19).

## *3.2.2 Electromagnetic Backscatter Coupling*

### 3.2.2.1 Power Supply to the Transponder

RFID systems in which the gap between reader and transponder is greater than 1 m are called *long-range systems*. These systems are operated at the *UHF frequencies* of 868 MHz (Europe) and 915 MHz (USA), and at the *microwave frequencies* 2.5 and 5.8 GHz. The short wavelengths

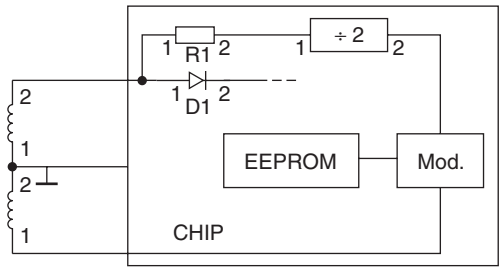


**Figure 3.19** Basic circuit of a transponder with subharmonic back frequency. The received clocking signal is split into two, the data is modulated and fed into the transponder coil via a tap

of these frequency ranges facilitate the construction of antennas with far smaller dimensions and greater efficiency than would be possible using frequency ranges below 30 MHz.

In order to be able to assess the energy available for the operation of a transponder we first calculate the *free space path loss* $a_F$ in relation to the distance $r$ between the transponder and the reader's antenna, the gain $G_T$ and $G_R$ of the transponder's and reader's antenna, plus the transmission frequency $f$ of the reader:

$$a_F = -147.6 + 20\log(r) + 20\log(f) - 10\log(G_T) - 10\log(G_R) \tag{3.1}$$

The free space path loss is a measure of the relationship between the RF power emitted by a reader into 'free space' and the RF power received by the transponder.

Using current low-power semiconductor technology, transponder chips can be produced with a power consumption of no more than 5 μW (Friedrich and Annala, 2001). The efficiency of an integrated rectifier can be assumed to be 5–25% in the UHF and microwave range (Tanneberger, 1995). Given an efficiency of 10%, we thus require received power of $P_e = 50\,\mu W$ at the terminal of the transponder antenna for the operation of the transponder chip. This means that where the reader's transmission power is $P_s = 0.5$ W EIRP (effective isotropic radiated power) the free space path loss may not exceed 40 dB ($P_s/P_e = 10\,000/1$) if sufficiently high power is to be obtained at the transponder antenna for the operation of the transponder. A glance at Table 3.7 shows that at a transmission frequency of 868 MHz a *range* of a little over 3 m would be realisable; at 2.45 GHz a little over 1 m could be achieved. If the transponder's chip had a greater power consumption the achievable range would fall accordingly.

In order to achieve long ranges of up to 15 m or to be able to operate transponder chips with a greater power consumption at an acceptable range, backscatter transponders often have a backup battery to supply power to the transponder chip (Figure 3.20). To prevent this battery from being loaded unnecessarily, the microchips generally have a power saving 'power down' or 'standby' mode.

**Table 3.7** Free space path loss $a_F$ at different frequencies and distances. The gain of the transponder's antenna was assumed to be 1.64 (dipole), the gain of the reader's antenna was assumed to be 1 (isotropic emitter)

| Distance $r$ (m) | 868 Mhz (dB) | 915 Mhz (dB) | 2.45 GHz (dB) |
|---|---|---|---|
| 0.3 | 18.6 | 19.0 | 27.6 |
| 1 | 29.0 | 29.5 | 38.0 |
| 3 | 38.6 | 39.0 | 47.6 |
| 10 | 49.0 | 49.5 | 58.0 |

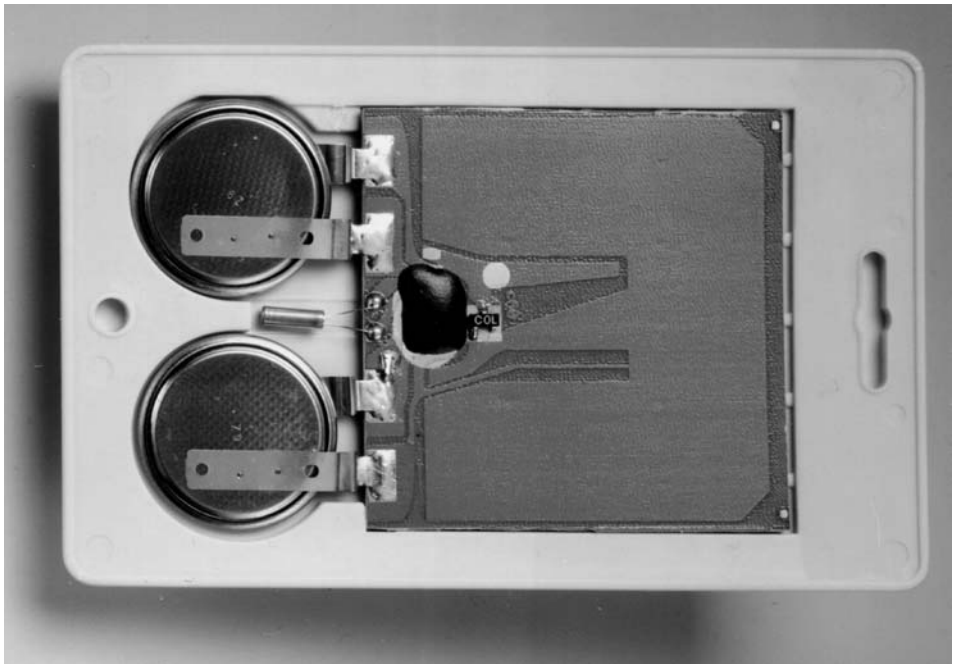


**Figure 3.20** Active transponder for the frequency range 2.45 GHz. The data carrier is supplied with power by two *lithium batteries*. The transponder's microwave antenna is visible on the printed circuit board in the form of a U-shaped area (reproduced by permission of Pepperl & Fuchs, Mannheim)

If the transponder moves out of range of a reader, then the chip automatically switches over to the power-saving 'power down' mode. In this state the power consumption is a few μA at most. The chip is not reactivated until a sufficiently strong signal is received in the read range of a reader, whereupon it switches back to normal operation. However, the battery of an active transponder never provides power for the transmission of data between transponder and reader, but serves exclusively for the supply of the microchip. Data transmission between transponder and reader relies exclusively upon the power of the electromagnetic field emitted by the reader.

#### 3.2.2.2 Data Transfer Transponder → Reader

##### *3.2.2.2.1 Modulated Reflection Cross-Section*

We know from the field of *radar technology* that electromagnetic waves are reflected by objects with dimensions greater than around half the wavelength of the wave. The efficiency with which an object reflects electromagnetic waves is described by its *reflection cross-section*. Objects that are in resonance with the wavefront that hits them, as is the case for antennas at the appropriate frequency, for example, have a particularly large reflection cross-section.

Power $P_1$ is emitted from the reader's antenna, a small proportion of which (free space attenuation) reaches the transponder's antenna (Figure 3.21). The power $P_1'$ is supplied to the antenna connections as RF voltage and after rectification by the diodes $D_1$ and $D_2$ this can be used as turn-on voltage for the deactivation or activation of the power saving 'power down' mode. The diodes used here are *low-barrier Schottky diodes*, which have a particularly low threshold voltage. The voltage obtained may also be sufficient to serve as a power supply for short ranges.

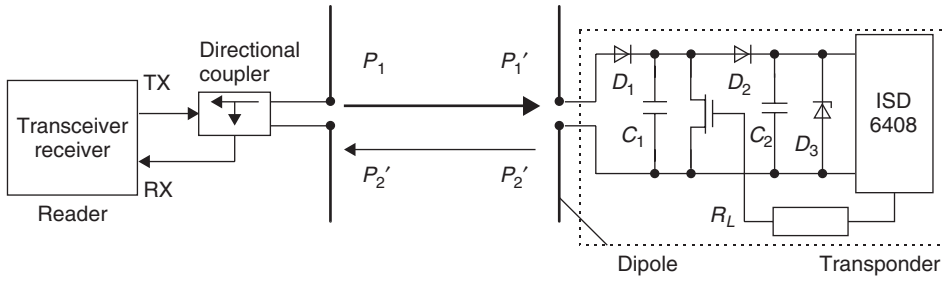


**Figure 3.21** Operating principle of a backscatter transponder. The impedance of the chip is 'modulated' by switching the chip's FET (reproduced by permission of Integrated Silicon Design Pty, Ltd)

A proportion of the incoming power $P_1'$ is reflected by the antenna and returned as power $P_2$. The *reflection characteristics* (= reflection cross-section) of the antenna can be influenced by altering the load connected to the antenna. In order to transmit data from the transponder to the reader, a load resistor $R_L$ connected in parallel with the antenna is switched on and off in time with the data stream to be transmitted. The amplitude of the power $P_2$ reflected from the transponder can thus be modulated (*modulated backscatter*).

The power $P_2$ reflected from the transponder is radiated into free space. A small proportion of this (free space attenuation) is picked up by the reader's antenna. The reflected signal therefore travels into the antenna connection of the reader in the backwards direction and can be decoupled using a *directional coupler* and transferred to the receiver input of a reader. The forward signal of the transmitter, which is stronger by powers of ten, is to a large degree suppressed by the directional coupler.

The ratio of power transmitted by the reader and power returning from the transponder ($P_1/P_2$) can be estimated using the radar equation (for an explanation, refer to Chapter 4).

## *3.2.3 Close-Coupling*

### 3.2.3.1 Power Supply to the Transponder

*Close coupling systems* are designed for ranges between 0.1 cm and a maximum of 1 cm. The transponder is therefore inserted into the reader or placed onto a marked surface ('*touch and go*') for operation.

Inserting the transponder into the reader, or placing it on the reader, allows the transponder coil to be precisely positioned in the *air gap* of a ring-shaped or U-shaped core. The functional layout of the transponder coil and reader coil corresponds with that of a transformer (Figure 3.22). The reader represents the primary winding and the transponder coil represents the secondary winding of a transformer. A high-frequency alternating current in the primary winding generates a high-frequency magnetic field in the core and air gap of the arrangement, which also flows through the transponder coil. This power is rectified to provide a power supply to the chip.

Because the voltage $U$ induced in the transponder coil is proportional to the frequency $f$ of the exciting current, the frequency selected for power transfer should be as high as possible. In practice, frequencies in the range 1–10 MHz are used. In order to keep the losses in the transformer core low, a ferrite material that is suitable for this frequency must be selected as the core material.

Because, in contrast to inductively coupled or microwave systems, the efficiency of power transfer from reader to transponder is very good, close-coupling systems are excellently suited for

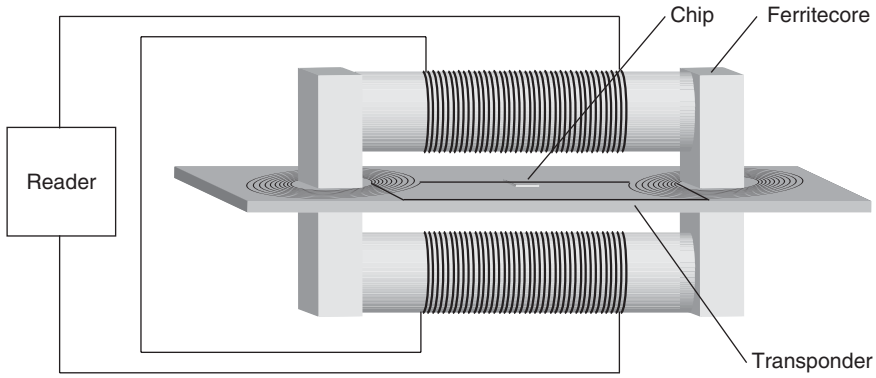


**Figure 3.22** Close-coupling transponder in an insertion reader with magnetic coupling coils

the operation of chips with a high power consumption. This includes microprocessors, which still require some 10 mW power for operation (Sickert, 1994). For this reason, the close-coupling chip card systems on the market all contain microprocessors.

The mechanical and electrical parameters of contactless close-coupling chip cards are defined in their own standard, ISO 10536. For other designs the operating parameters can be freely defined.

#### 3.2.3.2 Data Transfer Transponder → Reader

##### *3.2.3.2.1 Magnetic Coupling*

Load modulation with subcarrier is also used for magnetically coupled data transfer from the transponder to the reader in close-coupling systems. Subcarrier frequency and modulation is specified in ISO 10536 for close-coupling chip cards.

##### *3.2.3.2.2 Capacitive Coupling*

Due to the short distance between the reader and transponder, close-coupling systems may also employ *capacitive coupling* for data transmission. Plate capacitors are constructed from coupling surfaces isolated from one another, and these are arranged in the transponder and reader such that when a transponder is inserted they are exactly parallel to one another.

This procedure is also used in close-coupling smart cards. The mechanical and electrical characteristics of these cards are defined in ISO/IEC 10536.

## *3.2.4 Data Transfer Reader → Transponder*

All known digital modulation procedures are used in data transfer from the reader to the transponder in full- and half-duplex systems, irrespective of the operating frequency or the coupling procedure. There are three basic procedures:

- ASK: amplitude shift keying
- FSK: frequency shift keying
- PSK: phase shift keying

Because of the simplicity of demodulation, the majority of systems use ASK modulation.

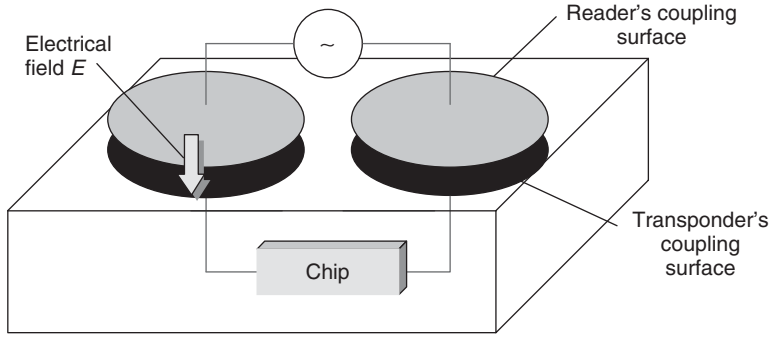


**Figure 3.23** Capacitive coupling in close-coupling systems occurs between two parallel metal surfaces positioned a short distance apart from each other

## *3.2.5 Electrical Coupling*

### 3.2.5.1 Power Supply of Passive Transponders

In *electrically* (i.e. *capacitively*) coupled systems the reader generates a strong, high-frequency *electrical field*. The reader's antenna consists of a large, electrically conductive area (*electrode*), generally a metal foil or a metal plate. If a high-frequency voltage is applied to the electrode a high-frequency electric field forms between the electrode and the earth potential (ground). The voltages required for this, ranging between a few hundred volts and a few thousand volts, are generated in the reader by voltage rise in a resonant circuit made up of a coil $L_1$ in the reader, plus the parallel connection of an internal capacitor $C_1$ and the capacitance active between the electrode and the earth potential $C_{\text{R-GND}}$. The resonant frequency of the resonant circuit corresponds with the transmission frequency of the reader.

The antenna of the transponder is made up of two conductive surfaces lying in a plane (electrodes). If the transponder is placed within the electrical field of the reader, then an electric voltage arises between the two transponder electrodes, which is used to supply power to the transponder chips.

Since a capacitor is active both between the transponder and the transmission antenna ($C_{\text{R-T}}$) and between the transponder antenna and the earth potential ($C_{\text{T-GND}}$) the equivalent circuit diagram for an electrical coupling can be considered in a simplified form as a *voltage divider* with the elements $C_{\text{R-T}}$, $R_{\text{L}}$ (input resistance of the transponder) and $C_{\text{T-GND}}$ (see Figure 3.26). Touching one of the transponder's electrodes results in the capacitance $C_{\text{T-GND}}$, and thus also the *read range*, becoming significantly greater.

The currents that flow in the electrode surfaces of the transponder are very small. Therefore, no particular requirements are imposed upon the conductivity of the electrode material. In addition to the normal metal surfaces (metal foil) the electrodes can thus also be made of conductive colours (e.g. a *silver conductive paste*) or a *graphite coating* (Baddeley and Ruiz, 1998).

### 3.2.5.2 Data Transfer Transponder → Reader

If an electrically coupled transponder is placed within the interrogation zone of a reader, the input resistance $R_{\text{L}}$ of the transponder acts upon the resonant circuit of the reader via the coupling capacitance $C_{\text{R-T}}$ active between the reader and transponder electrodes, damping the resonant circuit slightly. This damping can be switched between two values by switching a modulation resistor $R_{\text{mod}}$

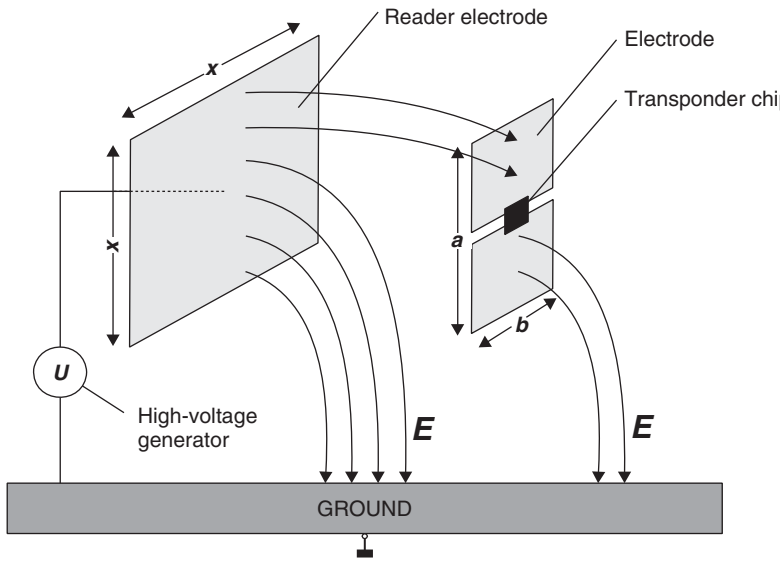


**Figure 3.24** An electrically coupled system uses electrical (electrostatic) fields for the transmission of energy and data

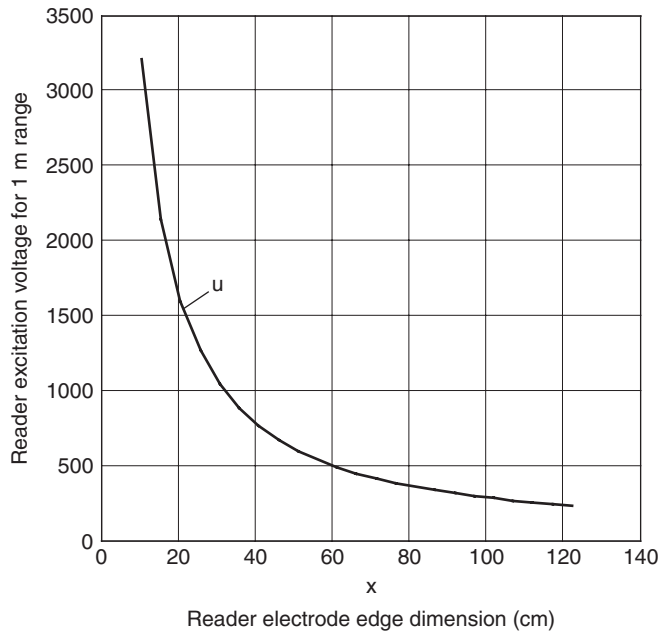


**Figure 3.25** Necessary electrode voltage for the reading of a transponder with the electrode size $a \times b = 4.5 \times 7$ cm (format corresponds with a smart card), at a distance of 1 m ($f = 125$ kHz)

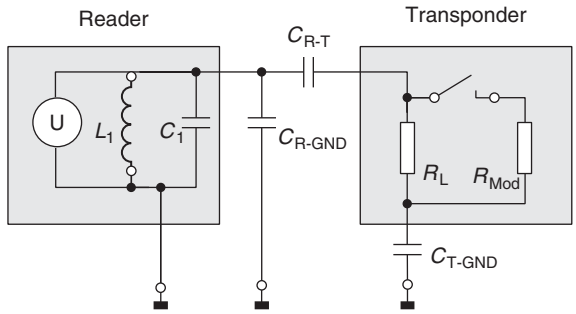


**Figure 3.26** Equivalent circuit diagram of an electrically coupled RFID system

in the transponder on and off. Switching the modulation resistor $R_{mod}$ on and off thereby generates an amplitude modulation of the voltage present at $L_1$ and $C_1$ by the remote transponder. By switching the modulation resistor $R_{mod}$ on and off in time with data, this data can be transmitted to the reader. This procedure is called *load modulation*.

## 3.3 Sequential Procedures

If the transmission of data and power from the reader to the data carrier alternates with data transfer from the transponder to the reader, then we speak of a *sequential procedure* (SEQ).

The characteristics used to differentiate between SEQ and other systems have already been described in Section 3.2.

### *3.3.1 Inductive Coupling*

#### 3.3.1.1 Power Supply to the Transponder

Sequential systems using inductive coupling are operated exclusively at frequencies below 135 kHz. A transformer-type coupling is created between the reader's coil and the transponder's coil. The induced voltage generated in the transponder coil by the effect of an alternating field from the reader is rectified and can be used as a power supply.

In order to achieve higher efficiency of data transfer, the transponder frequency must be precisely matched to that of the reader, and the quality of the transponder coil must be carefully specified. For this reason the transponder contains an *on-chip trimming capacitor* to compensate for resonant frequency manufacturing tolerances.

However, unlike full- and half-duplex systems, in sequential systems the reader's transmitter does not operate on a continuous basis. The energy transferred to the transmitter during the transmission operation charges up a *charging capacitor* to provide an energy store. The transponder chip is switched over to standby or power-saving mode during the charging operation, so that almost all of the energy received is used to charge up the charging capacitor. After a fixed charging period the reader's transmitter is switched off again.

The energy stored in the transponder is used to send a reply to the reader. The minimum capacitance of the charging capacitor can be calculated from the necessary operating voltage and the chip's power consumption:

$$C = \frac{Q}{U} = \frac{It}{[V_{max} - V_{min}]} \tag{3.2}$$

**Table 3.8** Meaning of the symbols in formula 3.2

| | |
|---|---|
| $V_{max}$, $V_{min}$ | Limit values for operating voltage that may not be exceeded |
| $I$ | Power consumption of the chip during operation |
| $t$ | Time required for the transmission of data from transponder to reader |

For example, the parameters $I = 5\,\mu A$, $t = 20\,ms$, $V_{max} = 4.5\,V$ and $V_{min} = 3.5\,V$ yield a charging capacitor of $C = 100\,nF$ (Schürmann, 1993).

### 3.3.1.2 A Comparison between FDX/HDX and SEQ Systems

Figure 3.27 illustrates the different conditions arising from full/half-duplex (FDX/HDX) and sequential (SEQ) systems.

Because the power supply from the reader to the transponder in full-duplex systems occurs at the same time as data transfer in both directions, the chip is permanently in operating mode. *Power matching* between the transponder antenna (current source) and the chip (current consumer) is desirable to utilise the transmitted energy optimally. However, if precise power matching is used only half of the source voltage (= open-circuit voltage of the coil) is available. The only option for increasing the available operating voltage is to increase the impedance (= load resistance) of the chip. However, this is the same as decreasing the power consumption.

Therefore the design of full-duplex systems is always a compromise between power matching (maximum power consumption $P_{chip}$ at $U_{chip} = 1/2U_0$) and voltage matching (minimum power consumption $P_{chip}$ at maximum voltage $U_{chip} = U_0$).

The situation is completely different in sequential systems: during the charging process the chip is in standby or power-saving mode, which means that almost no power is drawn through the chip.

The charging capacitor is fully discharged at the beginning of the charging process and therefore represents a very low ohmic load for the voltage source (Figure 3.27: start loading). In this state, the

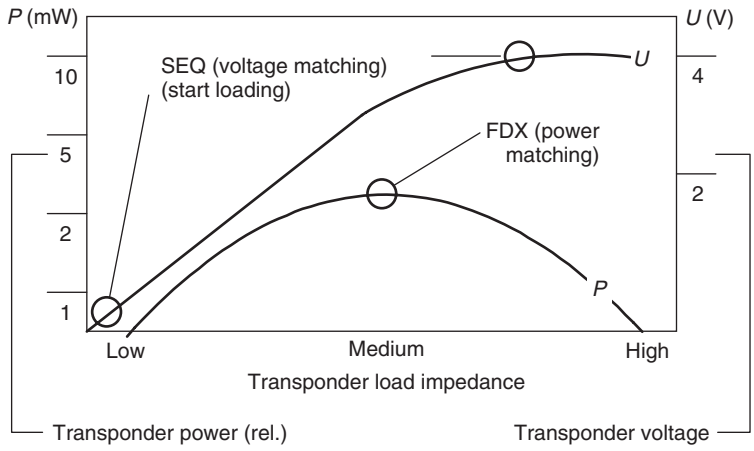


**Figure 3.27** Comparison of induced transponder voltage in FDX/HDX and SEQ systems (Schürmann, 1993)

maximum amount of current flows into the charging capacitor, whereas the voltage approaches zero (= *current matching*). As the charging capacitor is charged, the charging current starts to decrease according to an exponential function, and reaches zero when the capacitor is fully charged. The state of the charged capacitor corresponds with *voltage matching* at the transponder coil.

This achieves the following advantages for the chip power supply compared to a full/half-duplex system:

- The full source voltage of the transponder coil is available for the operation of the chip. Thus the available operating voltage is up to twice that of a comparable full/half-duplex system.
- The energy available to the chip is determined only by the capacitance of the charging capacitor and the charging period. Both values can (in theory!) be given any required magnitude. In full/half-duplex systems the maximum power consumption of the chip is fixed by the power matching point (i.e. by the coil geometry and field strength $H$).

#### 3.3.1.3 Data Transmission Transponder → Reader

In sequential systems a full read cycle consists of two phases, the charging phase and the reading phase.

The end of the charging phase is detected by an *end of burst detector*, which monitors the path of voltage at the transponder coil and thus recognises the moment when the reader field is switched off. At the end of the charging phase an on-chip oscillator, which uses the resonant circuit formed by the transponder coil as a frequency determining component, is activated. A weak magnetic alternating field is generated by the transponder coil, and this can be received by the reader. This gives an improved signal-interference distance of typically 20 dB compared with full/half-duplex systems, which has a positive effect upon the ranges that can be achieved using sequential systems.

The transmission frequency of the transponder corresponds with the resonant frequency of the transponder coil, which was adjusted to the transmission frequency of the reader when it was generated.

In order to be able to modulate the RF signal generated in the absence of a power supply, an additional modulation capacitor is connected in parallel with the resonant circuit in time with the data flow. The resulting frequency shift keying provides a *2 FSK modulation*.

After all the data has been transmitted, the discharge mode is activated to fully discharge the charging capacitor. This guarantees a safe Power-On-Reset at the start of the next charging cycle.

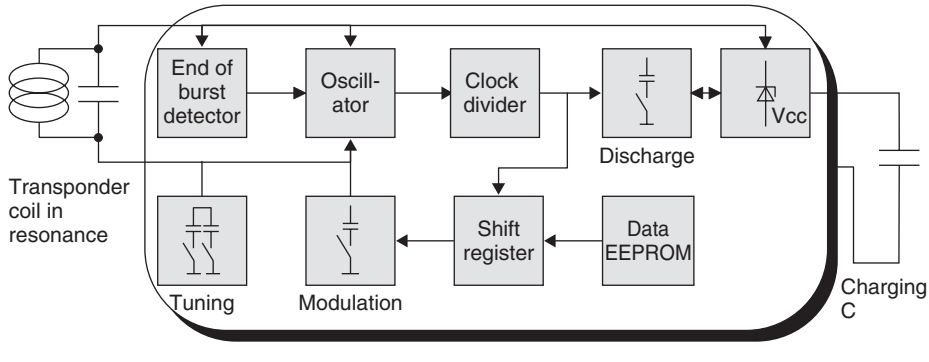


**Figure 3.28** Block diagram of a sequential transponder by Texas Instruments TIRIS® Systems, using inductive coupling (reproduced by permission of Texas Instruments)

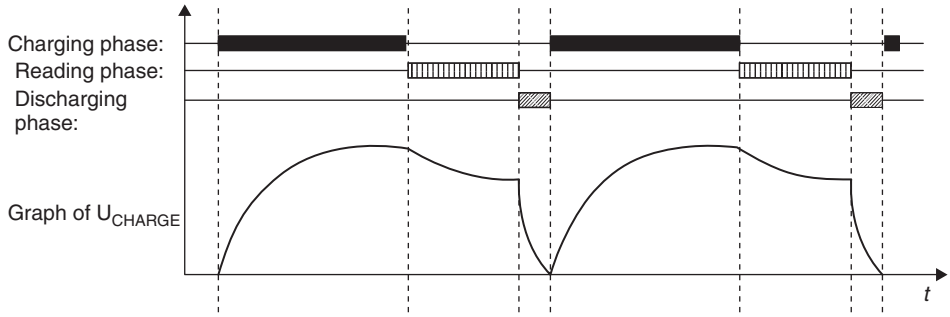


**Figure 3.29** Voltage path of the charging capacitor of an inductively coupled SEQ transponder during operation

## *3.3.2 Surface Acoustic Wave Transponder*

Surface acoustic wave (SAW) devices are based upon the piezoelectric effect and on the surface-related dispersion of elastic (= acoustic) waves at low speed. If an (ionic) crystal is elastically deformed in a certain direction, surface charges occur, giving rise to electrical voltages in the crystal (application: piezo lighter). Conversely, the application of a surface charge to a crystal leads to an elastic deformation in the crystal grid (application: piezo buzzer). Surface acoustic wave devices are operated at microwave frequencies, normally in the ISM range 2.45 GHz.

Electroacoustic transducers (interdigital transducers) and *reflectors* can be created using planar electrode structures on piezoelectric substrates. The normal substrate used for this application is *lithium niobate* or *lithium tantalate*. The electrode structure is created by a photolithographic procedure, similar to the procedure used in microelectronics for the manufacture of integrated circuits.

Figure 3.30 illustrates the basic layout of a surface wave transponder. A finger-shaped electrode structure – the *interdigital transducer* – is positioned at the end of a long piezoelectric substrate, and a suitable *dipole antenna* for the operating frequency is attached to its busbar. The interdigital transducer is used to convert between electrical signals and acoustic surface waves. An electrical impulse applied to the busbar causes a mechanical deformation to the surface of the substrate due to the piezoelectric effect between the electrodes (fingers), which disperses in both directions in the form of a surface wave (Rayleigh wave). For a normal substrate the dispersion speed lies between 3000 and 4000 m/s. Similarly, a *surface wave* entering the converter creates an electrical impulse at the busbar of the interdigital transducer due to the piezoelectric effect.

Individual electrodes are positioned along the remaining length of the surface wave transponder. The edges of the electrodes form a reflective strip and reflect a small proportion of the incoming surface waves. Reflector strips are normally made of aluminium; however some reflector strips are also in the form of etched grooves (Meinke, 1992).

A high-frequency *scanning pulse* generated by a reader is supplied from the dipole antenna of the transponder into the interdigital transducer and is thus converted into an acoustic surface wave, which flows through the substrate in the longitudinal direction. The frequency of the surface wave corresponds to the carrier frequency of the sampling pulse (e.g. 2.45 GHz, Figure 3.31). The carrier frequency of the reflected and returned pulse sequence thus corresponds with the transmission frequency of the sampling pulse. Part of the surface wave is reflected off each of the reflective strips that are distributed across the substrate, while the remaining part of the surface wave continues to travel to the end of the substrate and is absorbed there.

The reflected parts of the wave travel back to the interdigital transducer, where they are converted into a high-frequency pulse sequence and are emitted by the dipole antenna. This pulse sequence

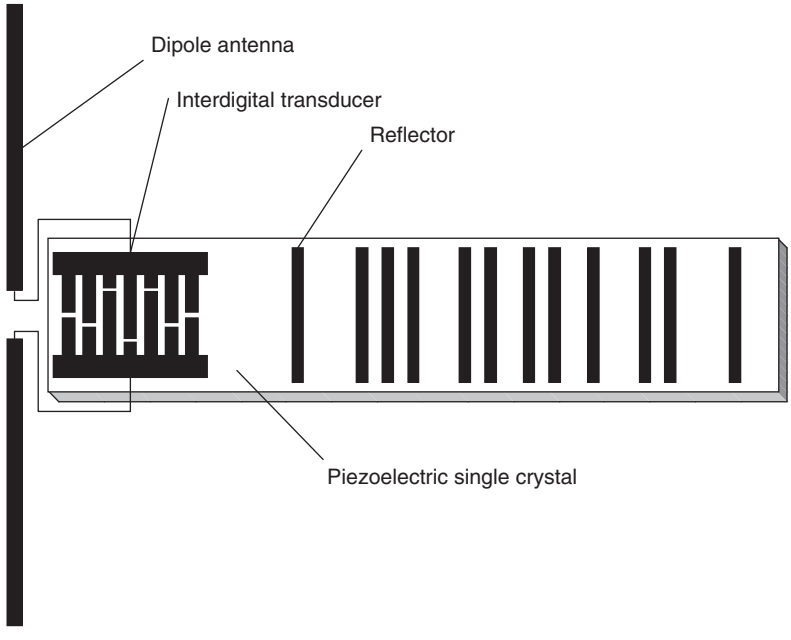


**Figure 3.30** Basic layout of an SAW transponder. Interdigital transducers and reflectors are positioned on the piezoelectric crystal

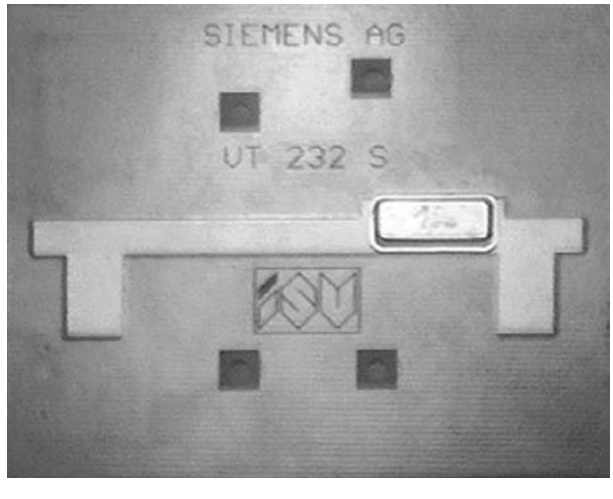


**Figure 3.31** Surface acoustic wave transponder for the frequency range 2.45 GHz with antenna in the form of microstrip line. The piezo crystal itself is located in an additional metal housing to protect it against environmental influences (reproduced by permission of Siemens AG, ZT KM, Munich)

can be received by the reader. The number of pulses received corresponds to the number of reflective strips on the substrate. Likewise, the delay between the individual pulses is proportional to the spatial distance between the reflector strips on the substrate, and so the spatial layout of the reflector strips can represent a binary sequence of digits.

Due to the slow dispersion speed of the surface waves on the substrate the first response pulse is only received by the reader after a dead time of around 1.5 ms after the transmission of the scanning pulse. This gives decisive advantages for the reception of the pulse.

Reflections of the scanning pulse on the metal surfaces of the environment travel back to the antenna of the reader at the speed of light. A reflection over a distance of 100 m to the reader would arrive at the reader 0.6 ms after emission from the reader's antenna (travel time there and back, the signal is damped by >160 dB). Therefore, when the transponder signal returns after 1.5 ms all reflections from the environment of the reader have long since died away, so they cannot lead to errors in the pulse sequence (Dziggel, 1997).

The data storage capacity and data transfer speed of a surface wave transponder depend upon the size of the substrate and the realisable minimum distance between the reflector strips on the substrate. In practice, around 16–32 bits are transferred at a data transfer rate of 500 kbit/s (Siemens, n.d.).

The range of a surface wave system depends mainly upon the transmission power of the scanning pulse and can be estimated using the radar equation (Chapter 4). At the permissible transmission power in the 2.45 GHz ISM frequency range a range of 1–2 m can be expected.

## 3.4 Near-Field Communication (NFC)

At first sight, near-field communication (NFC) is not an RFID system, but a wireless data interface between devices, similar to *Infrared* or the well-known *Bluetooth*. However, *NFC* has several characteristics that are of interest in relation to RFID systems.

Data transmission between two NFC interfaces uses high-frequency magnetic alternating fields in the frequency range of 13.56 MHz. The maximum communication range typical for NFC data transmission is 20 cm because the respective communication counterpart is located in the near-field of the transmitter antenna; therefore the communication is called near-field communication.

Figure 3.32 illustrates the physical principle of data transmission between two NFC interfaces. The NFC interface has a 13.56 MHz transmitter and a 13.56 MHz receiver that are alternately connected to the antenna. The antenna is designed as a large-surface coil or conductor loop.

For communication between two NFC interfaces, the individual NFC interface can take on different functions, i.e. that of an NFC initiator (master device) or an NFC target (slave device). Communication is always started by the NFC initiator. In addition, NFC communication distinguishes between two different operational modes, the active and the passive mode.

### *3.4.1 Active Mode*

In order to transmit data between two NFC interfaces in active mode, at first one of the NFC interfaces activates its transmitter and thus works as the NFC initiator. The high-frequency current that flows in the antenna induces an alternating magnetic field $H$ which spreads around the antenna loop. Part of the induced magnetic field moves through the antenna loop of the other NFC interface which is located close by. Then a voltage $U$ is induced in the antenna loop and can be detected by the receiver of the other NFC interface. If the NFC interface receives signals and the corresponding commands of an NFC initiator, this NFC interface automatically adopts the roll of an NFC target.

For data transmission between the NFC interfaces, the amplitude of the emitted magnetic alternating field is modulated (ASK modulation), similar to the data transmission between RFID reader

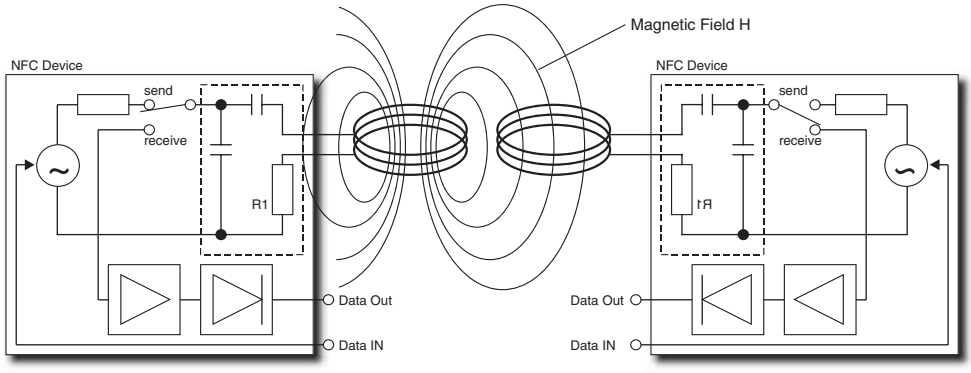


**Figure 3.32** In active mode, the NFC interfaces alternately emit magnetic fields for data transmission

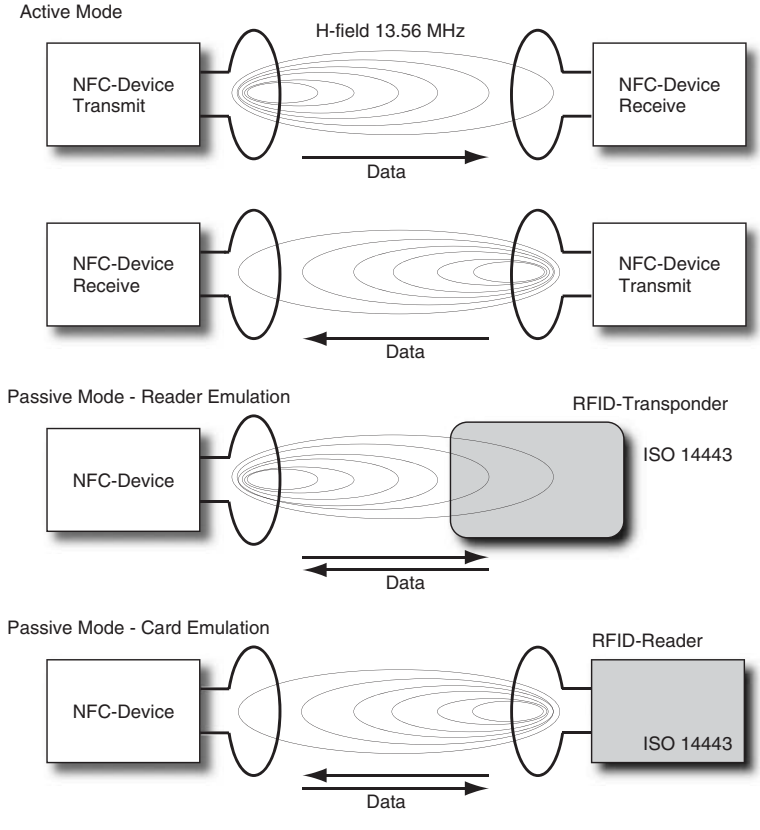


**Figure 3.33** NFC distinguishes between three different operating modes: active mode (i); and passive mode in the operating modes reader emulation (ii); and card emulation (iii)

and transponder. However, the difference between an NFC target in active mode and an RFID transponder consists in that the magnetic alternating field has to supply the transponder with power in order to operate the microchip. As opposed to this, the electronic device containing the NFC interface supplies the interface with power.

The transmission direction is reversed in order to send data from the NFC target to the NFC initiator. This means that the NFC target activates the transmitter and the NFC initiator switches to receiving mode. Both NFC interfaces alternately induce magnetic fields where data is transmitted from transmitter to receiver only.

### *3.4.2 Passive Mode*

In the passive mode, too, the NFC initiator induces a magnetic alternating field for transmitting data to the NFC target. The field's amplitude is modulated in line with the pulse of the data to be transmitted (ASK modulation). However, after having transmitted a data block, the field is not interrupted, but continues to be emitted in an unmodulated way. The NFC target now is able to transmit data to the NFC initiator by generating a *load modulation*. The load modulation method is also known from RFID systems.

Using this method for NFC interfaces provides a number of advantages and interesting options for practical operation. Thus the different rôles of the two NFC interfaces within the NFC communication can be negotiated and changed, at any time. An NFC interface with weak power supply, e.g. with a low-capacity battery, can negotiate and adopt the rôle of the NFC target in order to save power by transmitting data via load modulation.

The NFC interface that is the target is also able to establish, in addition to other NFC interfaces, the communication to compatible passive transponders (e.g. according to ISO/IEC 14443) that the NFC target supplies with power and that, via load modulation, can transmit data to the NFC interface. This option enables electronic devices equipped with NFC interfaces, such as NFC mobile phones, to read and write on different transponders such as smart labels or e-tickets. As the NFC interface in this case behaves similar to an RFID reader, this option is also called 'reader mode' or '*reader-emulation mode*'.

If an NFC interface is located close to a compatible RFID reader (e.g. according to ISO/IEC 14443), the NFC reader is also able to communicate with a reader. Here, the NFC interface adopts the roll of an NFC target and can transmit data to the reader using load modulation. This option enables RFID readers to exchange data with an electronic device with NFC interface, such as NFC mobile phones. From the reader's perspective, the electronic device behaves like a contactless smart card; this option is also called 'card mode' or '*card-emulation mode*'.

# 4

# Physical Principles of RFID Systems

The vast majority of RFID systems operate according to the principle of *inductive coupling*. Therefore, understanding of the procedures of power and data transfer requires a thorough grounding in the physical principles of magnetic phenomena. This chapter therefore contains a particularly intensive study of the theory of magnetic fields from the point of view of RFID.

Electromagnetic fields – radio waves in the classic sense – are used in RFID systems that operate at above 30 MHz. To aid understanding of these systems we will investigate the propagation of waves in the far field and the principles of radar technology.

Electric fields play a secondary role and are only exploited for capacitive data transmission in close-coupling systems. Therefore, this type of field will not be discussed further.

## 4.1 Magnetic Field

### *4.1.1 Magnetic Field Strength H*

Every moving charge (electrons in wires or in a vacuum), i.e. flow of current, is associated with a *magnetic field* (Figure 4.1). The intensity of the magnetic field can be demonstrated experimentally by the forces acting on a magnetic needle (compass) or a second electric current. The magnitude of the magnetic field is described by the *magnetic field strength* $H$ regardless of the material properties of the space.

In the general form we can say that: 'the contour integral of magnetic field strength along a closed curve is equal to the sum of the current strengths of the currents within it'.

$$\sum I = \oint \vec{H} \cdot \vec{\mathrm{d}}s \tag{4.1}$$

We can use this formula to calculate the field strength $H$ for different types of conductor.

In a straight conductor the field strength $H$ along a circular *flux line* at a distance $r$ is constant. The following is true:

$$H = \frac{1}{2\pi r} \tag{4.2}$$

*RFID Handbook: Fundamentals and Applications in Contactless Smart Cards, Radio Frequency Identification and Near-Field Communication, Third Edition.* Klaus Finkenzeller
© 2010 John Wiley & Sons, Ltd

**Table 4.1** Constants used

| Constant | Symbol | Value and unit |
|---|---|---|
| Electric field constant | $\varepsilon_0$ | $8.85 \times 10^{-12}$ A s/V m |
| Magnetic field constant | $\mu_0$ | $1.257 \times 10^{-6}$ V s/A m |
| Speed of light | $c$ | 299 792 km/s |
| Boltzmann constant | $k$ | $1.380\,662 \times 10^{-23}$ J/K |

**Table 4.2** Units and abbreviations used

| Variable | Symbol | Unit | Abbreviation |
|---|---|---|---|
| Magnetic field strength | $H$ | Ampere per meter | A/m |
| Magnetic flux ($n$ = number of windings) | $\Phi$ | Volt seconds | V s |
| | $\Psi = n\Phi$ | | |
| Magnetic inductance | $B$ | Volt seconds per meter squared | Vs/m$^2$ |
| Inductance | $L$ | Henry | H |
| Mutual inductance | $M$ | Henry | H |
| Electric field strength | $E$ | Volts per metre | V/m |
| Electric current | $I$ | Ampere | A |
| Electric voltage | $U$ | Volt | V |
| Capacitance | $C$ | Farad | F |
| Frequency | $f$ | Hertz | Hz |
| Angular frequency | $\omega = 2\pi f$ | 1/seconds | 1/s |
| Length | $l$ | Metre | m |
| Area | $A$ | Metre squared | m$^2$ |
| Speed | $v$ | Metres per second | m/s |
| Impedance | $Z$ | Ohm | Ω |
| Wavelength | $\lambda$ | Metre | m |
| Power | $P$ | Watt | W |
| Power density | $S$ | Watts per metre squared | W/m$^2$ |

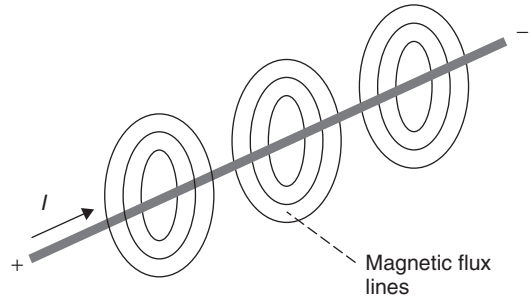


**Figure 4.1** Lines of magnetic flux are generated around every current-carrying conductor

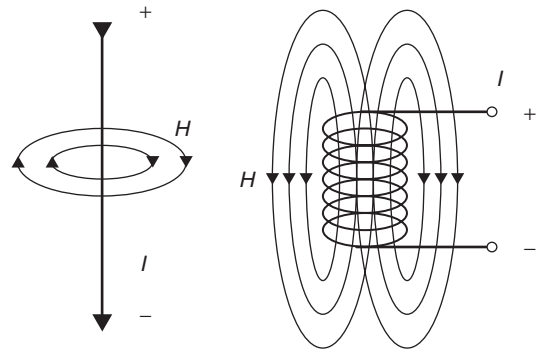


**Figure 4.2** Lines of magnetic flux around a current-carrying conductor and a current-carrying cylindrical coil

#### 4.1.1.1 Path of Field Strength H(x) in Conductor Loops

So-called short cylindrical coils or conductor loops are used as magnetic antennas to generate the *magnetic alternating field* in the write/read devices of inductively coupled RFID systems.

If the measuring point is moved away from the centre of the coil along the coil axis ($x$ axis), then the strength of the field $H$ will decrease as the distance $x$ is increased. A more in-depth investigation shows that the field strength in relation to the radius (or area) of the coil remains constant up to a certain distance and then falls rapidly (see Figure 4.4). In free space, the decay of field strength is approximately 60 dB per decade in the near-field of the coil, and flattens out to 20 dB per decade in the far-field of the electromagnetic wave that is generated (a more precise explanation of these effects can be found in Section 4.2.1).

The following equation can be used to calculate the path of field strength along the $x$ axis of a round coil (= conductor loop) similar to those employed in the transmitter antennas of inductively coupled RFID systems (Paul, 1993):

$$H = \frac{I \cdot N \cdot R^2}{2\sqrt{(R^2 + x^2)^3}} \tag{4.3}$$

where $N$ is the number of windings, $R$ is the circle radius $r$ and $x$ is the distance from the centre of the coil in the $x$ direction. The following boundary condition applies to this equation: $d \ll R$ and $x < \lambda/2\pi$ (the transition into the electromagnetic far field begins at a distance $>2\pi$; see Section 4.2.1).

At distance 0 or, in other words, at the centre of the antenna, the formula can be simplified to (Kuchling, 1985):

$$H = \frac{I \cdot N}{2R} \tag{4.4}$$

We can calculate the *field strength path* of a rectangular conductor loop with edge length $a \times b$ at a distance of $x$ using the following equation. This format is often used as a transmitter antenna.

$$H = \frac{N \cdot I \cdot ab}{4\pi\sqrt{\left(\frac{a}{2}\right)^2 + \left(\frac{b}{2}\right) + x^2}} \cdot \left( \frac{1}{\left(\frac{a}{2}\right)^2 + x^2} + \frac{1}{\left(\frac{b}{2}\right)^2 + x^2} \right) \tag{4.5}$$

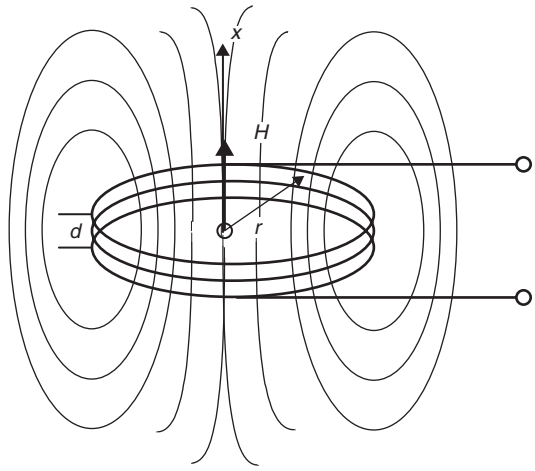


**Figure 4.3** The path of the lines of magnetic flux around a short cylindrical coil, or conductor loop, similar to those employed in the transmitter antennas of inductively coupled RFID systems

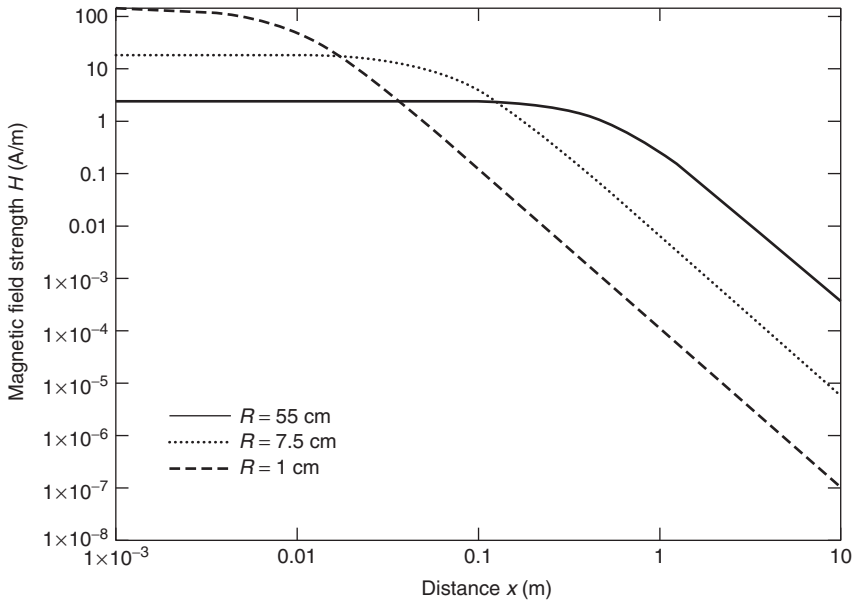


**Figure 4.4** Path of magnetic field strength $H$ in the near field of short cylinder coils, or conductor coils, as the distance in the $x$ direction is increased

Figure 4.4 shows the calculated field strength path $H(x)$ for three different antennas at a distance 1 mm–20 m. The number of windings and the antenna current are constant in each case; the antennas differ only in radius $R$. The calculation is based upon the following values: $H1$: $R = 55$ cm, $H2$: $R = 7.5$ cm, $H3$: $R = 1$ cm.

The calculation results confirm that the increase in field strength flattens out at short distances ($x < R$) from the antenna coil. Interestingly, the smallest of the three antennas exhibits a significantly higher field strength at the centre of the antenna (distance = 0), but at greater distances ($x > R$) the largest of the three antennas generates a significantly higher field strength. It is vital that this effect is taken into account in the design of antennas for inductively coupled RFID systems.

#### 4.1.1.2 Optimal Antenna Diameter

If the radius $R$ of the transmitter antenna is varied at a constant distance $x$ from the transmitter antenna under the simplifying assumption of constant coil current $I$ in the transmitter antenna, then field strength $H$ is found to be at its highest at a certain ratio of distance $x$ to antenna radius $R$. This means that for every *read range* of an RFID system there is an optimal antenna radius $R$. This is quickly illustrated by a glance at Figure 4.4: if the selected antenna radius is too great, the field strength is too low, even at a distance $x = 0$ from the transmission antenna. If, on the other hand, the selected antenna radius is too small, then we find ourselves within the range in which the field strength falls in proportion to $x^3$.

Figure 4.5 shows the graph of field strength $H$ as the coil radius $R$ is varied. The optimal coil radius for different read ranges is always the maximum point of the graph $H(R)$. To find the mathematical relationship between the maximum field strength $H$ and the coil radius $R$ we must first find the inflection point of the function $H(R)$, given by Equation 4.3 (Lee, 1999). To do this we find the first derivative $H'(R)$ by differentiating $H(R)$ with respect to $R$:

$$H'(R) = \frac{\mathrm{d}}{\mathrm{d}R}H(R) = \frac{2 \cdot I \cdot N \cdot R}{\sqrt{(R^2 + x^2)^3}} - \frac{3 \cdot I \cdot N \cdot R^3}{(R^2 + x^2) \cdot \sqrt{(R^2 + x^2)^3}} \tag{4.6}$$

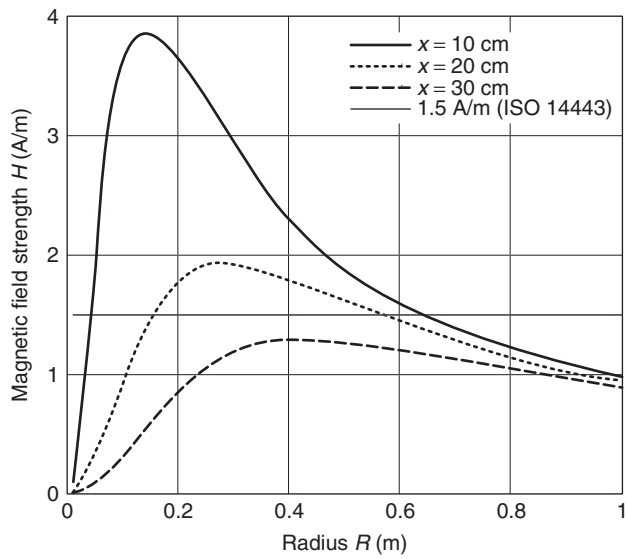


**Figure 4.5** Field strength $H$ of a transmission antenna given a constant distance $x$ and variable radius $R$, where $I = 1$ A and $N = 1$

The maximum value of the function $H(R)$, is found from the following zero points of the derivative dH/dR:

$$R_1 = x \cdot \sqrt{2}; \quad R_2 = -x \cdot \sqrt{2} \tag{4.7}$$

The optimal radius of a transmission antenna is thus twice the maximum desired read range. The second zero point is negative merely because the magnetic field $H$ of a conductor loop propagates in both directions of the $x$ axis (see also Figure 4.3).

However, an accurate assessment of a system's maximum read range requires knowledge of the *interrogation field strength* $H_{\min}$ of the transponder in question (see Section 4.1.9). If the selected antenna radius is too great, then there is a danger that the field strength $H$ may be too low to supply the transponder with sufficient operating energy, even at a distance $x = 0$.

## 4.1.2 Magnetic Flux and Magnetic Flux Density

The magnetic field of a (cylindrical) coil will exert a force on a magnetic needle. If a soft iron core is inserted into a (cylindrical) coil – all other things remaining equal – then the force acting on the magnetic needle will increase. The quotient $I \times N$ (Section 4.1.1) remains constant and therefore so does field strength. However, the flux density – the total number of flux lines – which is decisive for the force generated (cf. Paul, 1993), has increased.

The total number of lines of magnetic flux that pass through the inside of a cylindrical coil, for example, is denoted by *magnetic flux* $\Phi$. Magnetic flux density $B$ is a further variable related to area $A$ (this variable is often referred to as 'magnetic inductance $B$' in the literature) (Reichel, 1980). Magnetic flux is expressed as:

$$\Phi = B \cdot A \tag{4.8}$$

The material relationship between flux density $B$ and field strength $H$ (Figure 4.6) is expressed by the material equation:

$$B = \mu_0 \mu_r H = \mu H \tag{4.9}$$

The constant $\mu_0$ is the magnetic field constant ($\mu_0 = 4\pi \times 10^{-6}$ V s/A m) and describes the permeability (= magnetic conductivity) of a vacuum. The variable $\mu_r$ is called relative permeability and indicates how much greater than or less than $\mu_0$ the permeability of a material is.

## 4.1.3 Inductance L

A magnetic field, and thus a magnetic flux $\Phi$, will be generated around a conductor of any shape. This will be particularly intense if the conductor is in the form of a loop (coil). Normally, there is

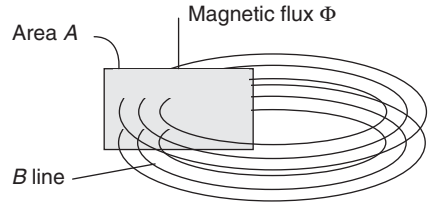


**Figure 4.6** Relationship between magnetic flux $\Phi$ and flux density $B$

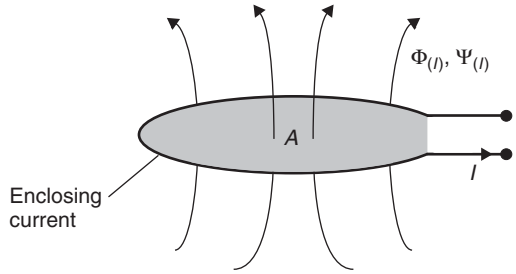


**Figure 4.7** Definition of inductance $L$

not one conduction loop, but $N$ loops of the same area $A$, through which the same current $I$ flows. Each of the conduction loops contributes the same proportion $\Phi$ to the total flux $\psi$ (Paul, 1993).

$$\Psi = \sum_N \Phi_N = N \cdot \Phi = N \cdot \mu \cdot H \cdot A \tag{4.10}$$

The ratio of the interlinked flux $\psi$ that arises in an area enclosed by current $I$, to the current in the conductor that encloses it (conductor loop) is denoted by *inductance* $L$:

$$L = \frac{\Psi}{I} = \frac{N \cdot \Phi}{I} = \frac{N \cdot \mu \cdot H \cdot A}{I} \tag{4.11}$$

Inductance is one of the characteristic variables of conductor loops (coils). The inductance of a conductor loop (coil) depends totally upon the material properties (permeability) of the space that the flux flows through and the geometry of the layout.

#### 4.1.3.1 Inductance of a Conductor Loop

If we assume that the diameter $d$ of the wire used is very small compared with the diameter $D$ of the conductor coil ($d/D < 0.0001$) a very simple approximation can be used:

$$L = N^2 \mu_0 R \cdot \ln\left(\frac{2R}{d}\right) \tag{4.12}$$

where $R$ is the radius of the conductor loop and $d$ is the diameter of the wire used.

### *4.1.4 Mutual Inductance M*

If a second conductor loop 2 (area $A_2$) is located in the vicinity of conductor loop 1 (area $A_1$), through which a current is flowing, then this will be subject to a proportion of the total magnetic flux $\Phi$ flowing through $A_1$. The two circuits are connected together by this partial flux or coupling flux. The magnitude of the coupling flux $\psi_{21}$ depends upon the geometric dimensions of both conductor loops, the position of the conductor loops in relation to one another, and the magnetic properties of the medium (e.g. permeability) in the layout.

Similarly to the definition of the (self) inductance $L$ of a conductor loop, the *mutual inductance* $M_{21}$ of conductor loop 2 in relation to conductor loop 1 is defined as the ratio of the partial flux $\psi_{21}$ enclosed by conductor loop 2, to the current $I_1$ in conductor loop 1 (Paul, 1993):

$$M_{21} = \frac{\Psi_{21}(I_1)}{I_1} = \oint_{A2} \frac{B_2(I_1)}{I_1} \cdot \mathrm{d}A_2 \tag{4.13}$$

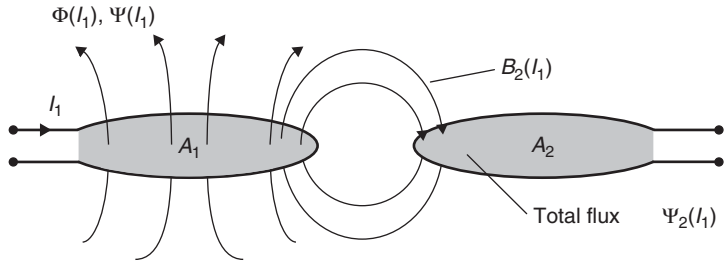


**Figure 4.8** The definition of mutual inductance $M_{21}$ by the coupling of two coils via a partial magnetic flow

Similarly, there is also a mutual inductance $M_{12}$. Here, current $I_2$ flows through the conductor loop 2, thereby determining the coupling flux $\psi_{12}$ in loop 1. The following relationship applies:

$$M = M_{12} = M_{21} \tag{4.14}$$

Mutual inductance describes the coupling of two circuits via the medium of a magnetic field. Mutual inductance is always present between two electrical circuits. Its dimension and unit are the same as for inductance.

The coupling of two electrical circuits via the magnetic field is the physical principle upon which inductively coupled RFID systems are based. Figure 4.9 shows a calculation of the mutual inductance between a transponder antenna and three different reader antennas, which differ only in diameter. The calculation is based upon the following values: $M_1 : R = 55$ cm, $M_2 : R = 7.5$ cm, $M_3 : R = 1$ cm, transponder: $R = 3.5$ cm. $N = 1$ for all reader antennas.

The graph of *mutual inductance* shows a strong similarity to the graph of magnetic field strength $H$ along the $x$ axis. Assuming a homogeneous magnetic field, the mutual inductance $M_{12}$ between two coils can be calculated using Equation (4.13). It is found to be:

$$M_{12} = \frac{B_2(I_1) \cdot N_2 \cdot A_2}{I_1} = \frac{\mu_0 \cdot H(I_1) \cdot N_2 \cdot A_2}{I_1} \tag{4.15}$$

We first replace $H(I_1)$ with the expression in equation (4.4), and substitute $R^2\pi$ for A, thus obtaining:

$$M_{12} = \frac{\mu_0 \cdot N_1 \cdot R_1^2 \cdot N_2 \cdot R_2^2 \cdot \pi}{2\sqrt{(R_1^2 + x^2)^3}} \tag{4.16}$$

In order to guarantee the homogeneity of the magnetic field in the area $A_2$ the condition $A_2 \leq A_1$ should be fulfilled. Furthermore, this equation only applies to the case where the $x$ axes of the two coils lie on the same plane. Due to the relationship $M = M_{12} = M_{21}$ the mutual inductance can be calculated as follows for the case $A_2 \geq A_1$:

$$M_{21} = \frac{\mu_0 \cdot N_1 \cdot R_1^2 \cdot N_2 \cdot R_2^2 \cdot \pi}{2\sqrt{(R_2^2 + x^2)^3}} \tag{4.17}$$

## *4.1.5 Coupling Coefficient k*

Mutual inductance is a quantitative description of the flux coupling of two conductor loops. The *coupling coefficient k* is introduced so that we can make a qualitative prediction about

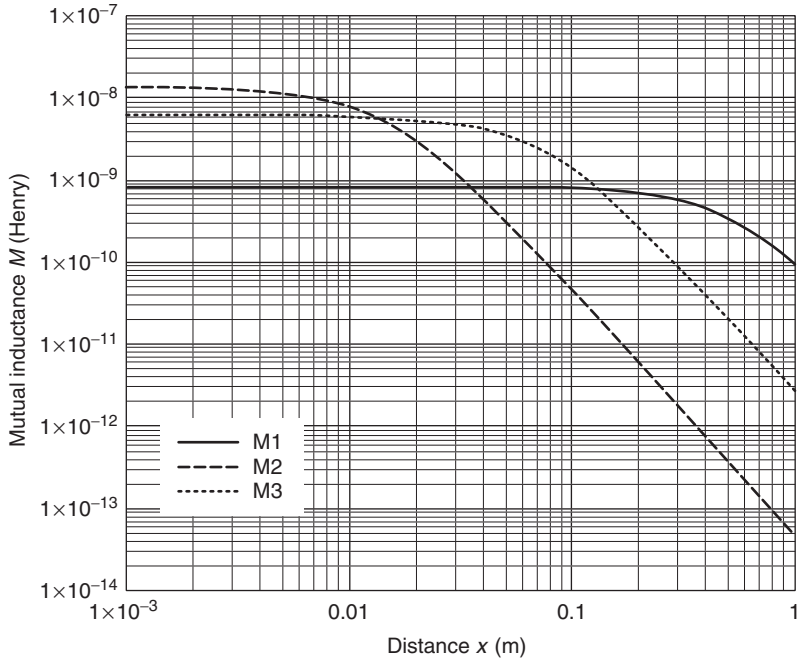


**Figure 4.9** Graph of mutual inductance between reader and transponder antenna as the distance in the $x$ direction increases

the coupling of the conductor loops independent of their geometric dimensions. The following applies:

$$k = \frac{M}{\sqrt{L_1 \cdot L_2}} \tag{4.18}$$

The coupling coefficient always varies between the two extreme cases $0 \leq k \leq 1$.

- $k = 0$: Full decoupling due to great distance or magnetic shielding.
- $k = 1$: Total coupling. Both coils are subject to the same magnetic flux $\Phi$. The transformer is a technical application of total coupling, whereby two or more coils are wound onto a highly permeable iron core.

An analytic calculation is only possible for very simple antenna configurations. For two parallel conductor loops centred on a single $x$ axis the coupling coefficient according to Roz and Fuentes (n.d.) can be approximated from the following equation. However, this only applies if the radii of the conductor loops fulfil the condition $r_{\text{Transp}} \leq r_{\text{Reader}}$. The distance between the conductor loops on the $x$ axis is denoted by $x$.

$$k(x) \approx \frac{r_{\text{Transp}}^2 \cdot r_{\text{Reader}}^2}{\sqrt{r_{\text{Transp}} \cdot r_{\text{Reader}}} \cdot \left(\sqrt{x^2 + r_{\text{Reader}}^2}\right)^3} \tag{4.19}$$

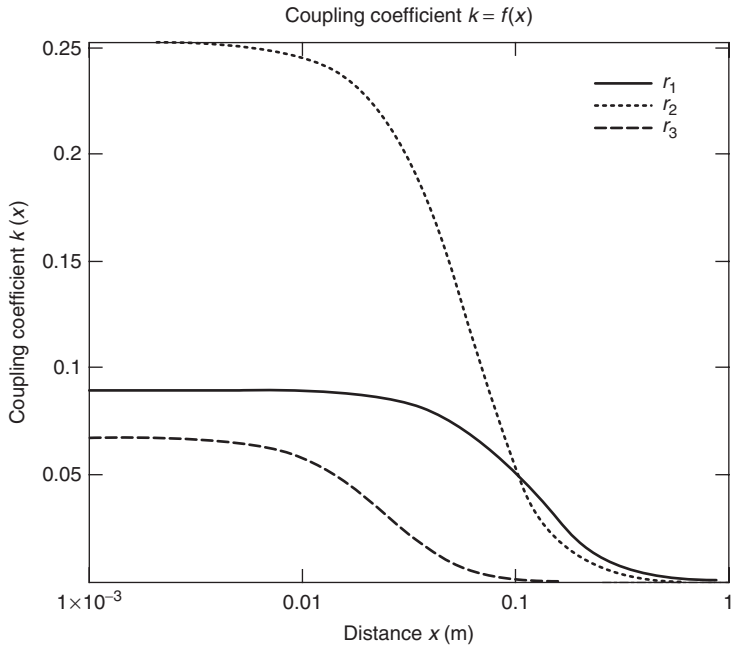


**Figure 4.10** Graph of the coupling coefficient for different sized conductor loops. Transponder antenna: $r_{\text{Transp}} = 2$ cm, reader antenna: $r_1 = 10$ cm, $r_2 = 7.5$ cm, $r_3 = 1$ cm

Due to the fixed link between the coupling coefficient and mutual inductance $M$, and because of the relationship $M = M_{12} = M_{21}$, the formula is also applicable to transmitter antennas that are smaller than the transponder antenna. Where $r_{\text{Transp}} \geq r_{\text{Reader}}$, we write:

$$k(x) \approx \frac{r_{\text{Transp}}^2 \cdot r_{\text{Reader}}^2}{\sqrt{r_{\text{Transp}} \cdot r_{\text{Reader}}} \cdot \left(\sqrt{x^2 + r_{\text{Transp}}^2}\right)^3} \tag{4.20}$$

The coupling coefficient $k(x) = 1$ ($= 100\%$) is achieved where the distance between the conductor loops is zero ($x = 0$) and the antenna radii are identical ($r_{\text{Transp}} = r_{\text{Reader}}$), because in this case the conductor loops are in the same place and are exposed to exactly the same magnetic flux $\psi$.

In practice, however, inductively coupled transponder systems operate with coupling coefficients that may be as low as 0.01 ($<1\%$) (Figure 4.10).

## *4.1.6 Faraday's Law*

Any change to the magnetic flux $\Phi$ generates an electric field strength $E_{\text{i}}$. This characteristic of the magnetic field is described by *Faraday's law*.

The effect of the electric field generated in this manner depends upon the material properties of the surrounding area. Figure 4.11 shows some of the possible effects (Paul, 1993):

- Vacuum: in this case, the field strength $E$ gives rise to an *electric rotational field*. Periodic changes in magnetic flux (high-frequency current in an antenna coil) generate an electromagnetic field that propagates itself into the distance.

- Open conductor loop: an open-circuit voltage builds up across the ends of an almost closed conductor loop, which is normally called *induced voltage*. This voltage corresponds with the line integral (path integral) of the field strength $E$ that is generated along the path of the conductor loop in space.
- Metal surface: an electric field strength $E$ is also induced in the metal surface. This causes free charge carriers to flow in the direction of the electric field strength. Currents flowing in circles are created, so-called *eddy currents*. This works against the exciting magnetic flux (Lenz's law), which may significantly damp the magnetic flux in the vicinity of *metal surfaces*. However, this effect is undesirable in inductively coupled RFID systems (installation of a transponder or reader antenna on a metal surface) and must therefore be prevented by suitable countermeasures (see Section 4.1.12.3).

In its general form Faraday's law is written as follows:

$$u_{\mathrm{i}} = \oint E_{\mathrm{i}} \cdot \mathrm{d}s = -\frac{\mathrm{d}\Psi(t)}{\mathrm{d}t} \tag{4.21}$$

For a conductor loop configuration with $N$ windings, we can also say that $u_{\mathrm{i}} = N \cdot \mathrm{d}\Psi/\mathrm{d}t$. (The value of the contour integral $\int E_{\mathrm{i}} \cdot \mathrm{d}s$ can be increased $N$ times if the closed integration path is carried out $N$ times; Paul, 1993).

To improve our understanding of inductively coupled RFID systems we will now consider the effect of inductance on magnetically coupled conduction loops.

A time-variant current $i_1(t)$ in conduction loop $L_1$ generates a time-variant magnetic flux $\mathrm{d}\Phi(i_1)/\mathrm{d}t$. In accordance with the inductance law, a voltage is induced in the conductor loops $L_1$ and $L_2$ through which some degree of magnetic flux is flowing. We can differentiate between two cases:

- *Self-inductance:* the flux change generated by the current change $\mathrm{d}i_{\mathrm{n}}/\mathrm{d}t$ induces a voltage $u_{\mathrm{n}}$ in the same conductor circuit.
- *Mutual inductance:* the flux change generated by the current change $\mathrm{d}i_{\mathrm{n}}/\mathrm{d}t$ induces a voltage in the adjacent conductor circuit $L_{\mathrm{m}}$. Both circuits are coupled by mutual inductance.

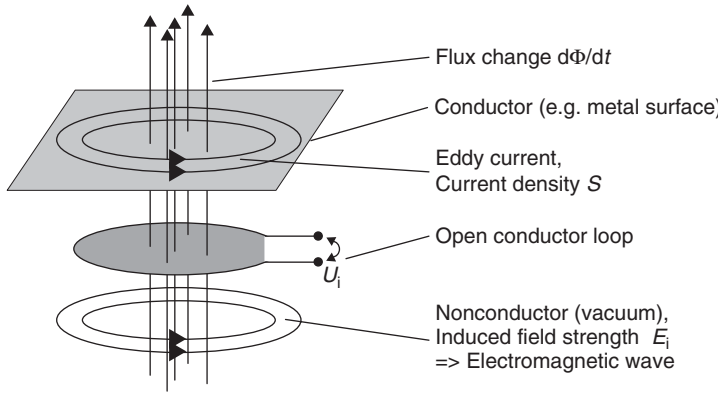


**Figure 4.11** Induced electric field strength $E$ in different materials. From top to bottom: metal surface, conductor loop and vacuum

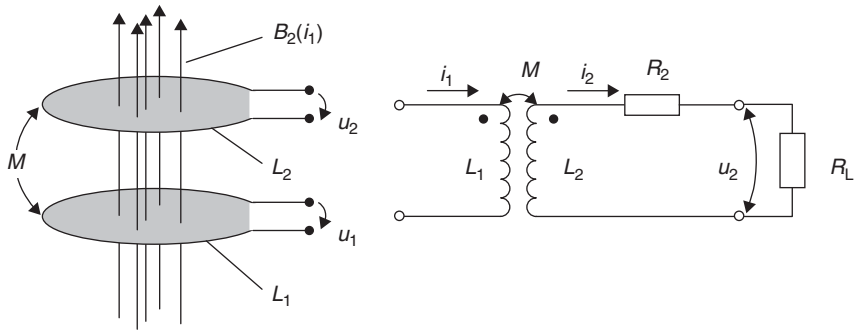


**Figure 4.12** Left, magnetically coupled conductor loops; right, equivalent circuit diagram for magnetically coupled conductor loops

Figure 4.12 shows the equivalent circuit diagram for coupled conductor loops. In an inductively coupled RFID system $L_1$ would be the transmitter antenna of the reader. $L_2$ represents the antenna of the transponder, where $R_2$ is the *coil resistance* of the transponder antenna. The current consumption of the data memory is symbolised by the load resistor $R_L$.

A time varying flux in the conductor loop $L_1$ induces voltage $u_{2\mathrm{i}}$ in the conductor loop $L_2$ due to mutual inductance $M$. The flow of current creates an additional voltage drop across the coil resistance $R_2$, meaning that the voltage $u_2$ can be measured at the terminals. The current through the load resistor $R_\mathrm{L}$ is calculated from the expression $u_2/R_\mathrm{L}$. The current through $L_2$ also generates an additional magnetic flux, which opposes the magnetic flux $\Psi_1(i_1)$. The above is summed up in the following equation:

$$u_2 = +\frac{\mathrm{d}\Psi_2}{\mathrm{d}t} = M\frac{\mathrm{d}i_1}{\mathrm{d}t} - L_2\frac{\mathrm{d}i_2}{\mathrm{d}t} - i_2R_2 \tag{4.22}$$

Because, in practice, $i_1$ and $i_2$ are sinusoidal (RF) alternating currents, we write Equation (4.22) in the more appropriate complex notation (where $\omega = 2\pi\mathrm{f}$):

$$u_2 = j\omega M \cdot i_1 - j\omega L_2 \cdot i_2 - i_2R_2 \tag{4.23}$$

If $i_2$ is replaced by $u_2/R_\mathrm{L}$ in equation (4.23), then we can solve the equation for $u_2$:

$$u_2 = \frac{j\omega M \cdot i_1}{1 + \dfrac{j\omega L_2 + R_2}{R_L}} \qquad \begin{array}{l} R_L \to \infty : u_2 = j\omega M \cdot i_1 \\ R_L \to 0 : u_2 \to 0 \end{array} \tag{4.24}$$

## 4.1.7 Resonance

The voltage $u_2$ induced in the transponder coil is used to provide the power supply to the data memory (*microchip*) of a passive transponder (see Section 4.1.8.1). In order to significantly improve the efficiency of the equivalent circuit illustrated in Figure 4.12, an additional capacitor $C_2$ is connected in parallel with the transponder coil $L_2$ to form a *parallel resonant circuit* with a *resonant frequency* that corresponds with the operating frequency of the RFID system in question.[1] The resonant frequency of the parallel resonant circuit can be calculated using the Thomson equation:

[1] However, in 13.56 MHz systems with anticollision procedures, the resonant frequency selected for the transponder is often 1–5 MHz higher to minimise the effect of the interaction between transponders on overall performance.

$$f = \frac{1}{2\pi\sqrt{L_2 \cdot C_2}} \tag{4.25}$$

In practice, $C_2$ is made up of a parallel capacitor $C_2'$ and a parasitic capacitance $C_p$ from the real circuit. $C_2 = (C_2' + C_p)$. The required capacitance for the parallel capacitor $C_2'$ is found using the Thomson equation, taking into account the parasitic capacitance $C_p$:

$$C_2' = \frac{1}{(2\pi f)^2 L_2} - C_p \tag{4.26}$$

Figure 4.13 shows the equivalent circuit diagram of a real transponder. $R_2$ is the natural resistance of the transponder coil $L_2$ and the current consumption of the data carrier (chip) is represented by the load resistor $R_L$.

If a voltage $u_{Q2} = u_i$ is induced in the coil $L_2$, the following voltage $u_2$ can be measured at the data carrier load resistor $R_L$ in the equivalent circuit diagram shown in Figure 4.13:

$$u_2 = \frac{u_{Q2}}{1 + (j\omega L_2 + R_2) \cdot \left(\frac{1}{R_L} + j\omega C_2\right)} \tag{4.27}$$

We now replace the induced voltage $u_{Q2} = u_i$ by the factor responsible for its generation, $u_{Q2} = u_i = j\omega M \cdot i_1 = \omega \cdot k \cdot \sqrt{L_1 \cdot L_2} \cdot i_1$, thus obtaining the relationship between voltage $u_2$ and the magnetic coupling of transmitter coil and transponder coil:

$$u_2 = \frac{j\omega M \cdot i_1}{1 + (j\omega L_2 + R_2) \cdot \left(\frac{1}{R_L} + j\omega C_2\right)} \tag{4.28}$$

and:

$$u_2 = \frac{j\omega \cdot k \cdot \sqrt{L_1 \cdot L_2} \cdot i_1}{1 + (j\omega L_2 + R_2) \cdot \left(\frac{1}{R_L} + j\omega C_2\right)} \tag{4.29}$$

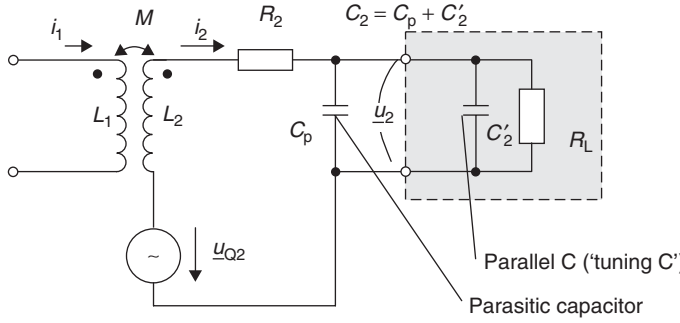


**Figure 4.13** Equivalent circuit diagram for magnetically coupled conductor loops. Transponder coil $L_2$ and parallel capacitor $C_2$ form a parallel resonant circuit to improve the efficiency of voltage transfer. The transponder's data carrier is represented by the grey box

This is because the overall resonant frequency of two transponders directly adjacent to one another is always lower than the resonant frequency of a single transponder.

or in the non-complex form (Jurisch, 1994):

$$u_2 = \frac{\omega \cdot k \cdot \sqrt{L_1 L_2} \cdot i_1}{\sqrt{\left(\frac{\omega L_2}{R_L} + \omega R_2 C_2\right)^2 + \left(1 - \omega^2 L_2 C_2 + \frac{R_2}{R_L}\right)^2}} \tag{4.30}$$

where $C_2 = C_2' + C_\mathrm{p}$.

Figure 4.14 shows the simulated graph of $u_2$ with and without resonance over a large frequency range for a possible transponder system. The current $i_1$ in the transmitter antenna (and thus also $\Phi(i_1)$), inductance $L_2$, mutual inductance $M$, $R_2$ and $R_\mathrm{L}$ are held constant over the entire frequency range.

We see that the graph of voltage $u_2$ for the circuit with the coil alone (circuit from Figure 4.12) is almost identical to that of the *parallel resonant circuit* (circuit from Figure 4.13) at frequencies well below the resonant frequencies of both circuits, but that when the resonant frequency is reached, voltage $u_2$ increases by more than a power of ten in the parallel resonant circuit compared with the voltage $u_2$ for the coil alone. Above the resonant frequency, however, voltage $u_2$ falls rapidly in the parallel resonant circuit, even falling below the value for the coil alone.

For transponders in the frequency range below 135 kHz, the transponder coil $L_2$ is generally connected in parallel with a chip capacitor ($C_2' = 20$–$220$ pF) to achieve the desired resonant frequency. At the higher frequencies of 13.56 and 27.125 MHz, the required capacitance $C_2$ is usually so low that it is provided by the input capacitance of the data carrier together with the parasitic capacitance of the transponder coil.

Let us now investigate the influence of the circuit elements $R_2$, $R_\mathrm{L}$ and $L_2$ on voltage $u_2$. To gain a better understanding of the interactions between the individual parameters we will now introduce the $Q$ factor (the $Q$ factor crops up again when we investigate the connection of transmitter antennas in Section 11.4.1.3). We will refrain from deriving formulas because the electric resonant circuit is dealt with in detail in the background reading.

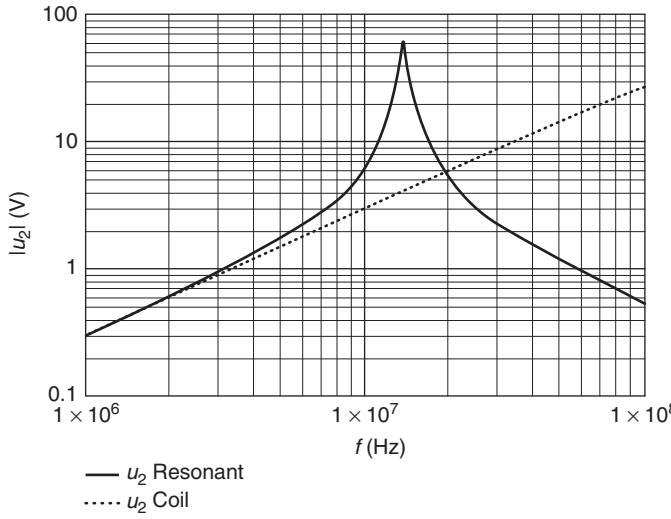


**Figure 4.14** Plot of voltage at a transponder coil in the frequency range 1–100 MHz, given a constant magnetic field strength $H$ or constant current $i_1$. A transponder coil with a parallel capacitor shows a clear voltage step-up when excited at its resonant frequency ($f_\mathrm{RES} = 13.56$ MHz)

The *Q factor* is a measure of the voltage and current step-up in the resonant circuit at its resonant frequency. Its reciprocal $1/Q$ denotes the expressively named *circuit damping d*. The $Q$ factor is very simple to calculate for the equivalent circuit in Figure 4.13. In this case $\omega$ is the angular frequency ($\omega = 2\pi f$) of the transponder resonant circuit:

$$Q = \frac{1}{R_2 \cdot \sqrt{\frac{C_2}{L_2}} + \frac{1}{R_L} \cdot \sqrt{\frac{L_2}{C_2}}} = \frac{1}{\frac{R_2}{\omega L_2} + \frac{\omega L_2}{R_L}} \tag{4.31}$$

A glance at Equation (4.31) shows that when $R_2 \to \infty$ and $R_L \to 0$, the Q factor also tends towards zero. On the other hand, when the transponder coil has a very low coil resistance $R_2 \to 0$ and there is a high load resistor $R_L \gg 0$ (corresponding with very low transponder chip power consumption), very high $Q$ factors can be achieved. The voltage $u_2$ is now proportional to the quality of the resonant circuit, which means that the dependency of voltage $u_2$ upon $R_2$ and $R_L$ is clearly defined.

Voltage $u_2$ thus tends towards zero where $R_2 \to \infty$ and $R_L \to 0$. At a very low transponder coil resistance $R_2 \to 0$ and a high value load resistor $R_L \gg 0$, on the other hand, a very high voltage $u_2$ can be achieved (compare Equation 4.30).

It is interesting to note the path taken by the graph of voltage $u_2$ when the inductance of the transponder coil $L_2$ is changed, thus maintaining the resonance condition (i.e. $C_2 = 1/\omega^2 L_2$ for all values of $L_2$). We see that for certain values of $L_2$, voltage $u_2$ reaches a clear peak (Figure 4.15).

If we now consider the graph of the $Q$ factor as a function of $L_2$ (Figure 4.16), then we observe a maximum at the same value of transponder inductance $L_2$. The maximum voltage $u_2 = f(L_2)$ is therefore derived from the maximum Q factor, $Q = f(L_2)$, at this point.

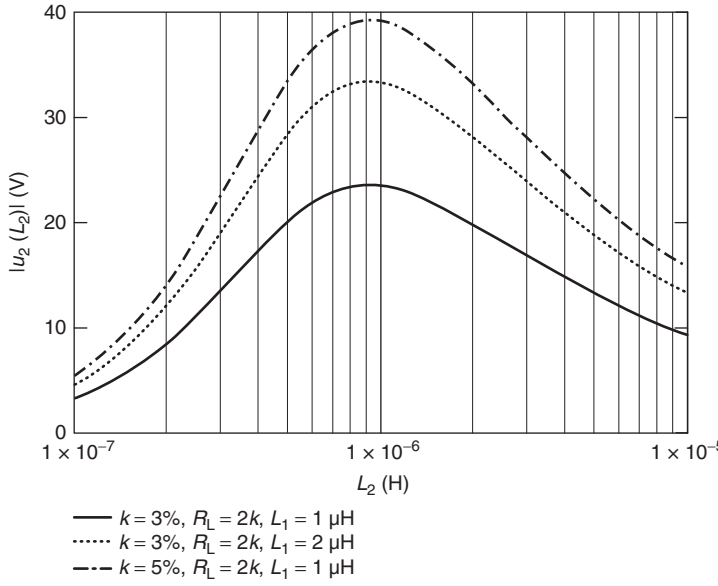


**Figure 4.15** Plot of voltage $u_2$ for different values of transponder inductance $L_2$. The resonant frequency of the transponder is equal to the transmission frequency of the reader for all values of $L_2$ ($i_1 = 0.5$ A, $f = 13.56$ MHz, $R_2 = 1\Omega$)

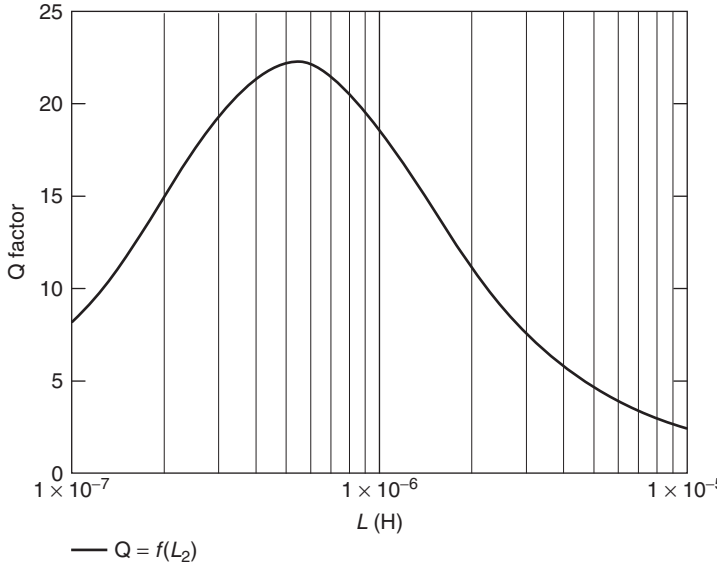


**Figure 4.16** Graph of the $Q$ factor as a function of transponder inductance $L_2$, where the resonant frequency of the transponder is constant ($f = 13.56$ MHz, $R_2 = 1\Omega$)

This indicates that for every pair of parameters ($R_2$, $R_L$), there is an inductance value $L_2$ at which the $Q$ factor, and thus also the supply voltage $u_2$ to the data carrier, is at a maximum. This should always be taken into consideration when designing a transponder, because this effect can be exploited to optimise the energy range of an inductively coupled RFID system. However, we must also bear in mind that the influence of component tolerances in the system also reaches a maximum in the $Q_{max}$ range. This is particularly important in systems designed for mass production. Such systems should be designed so that reliable operation is still possible in the range $Q \ll Q_{max}$ at the maximum distance between transponder and reader.

$R_L$ should be set at the same value as the input resistance of the data carrier after setting the 'power on' reset, i.e. before the activation of the voltage regulator, as is the case for the maximum energy range of the system.

## *4.1.8 Practical Operation of the Transponder*

### 4.1.8.1 Power Supply to the Transponder

Transponders are classified as active or passive depending upon the type of power supply they use.

*Active transponders* incorporate their own battery to provide the power supply to the data carrier. In these transponders, the voltage $u_2$ is generally only required to generate a 'wake up' signal. As soon as the voltage $u_2$ exceeds a certain limit this signal is activated and puts the data carrier into operating mode. The transponder returns to the power saving 'sleep' or 'standby mode' after the completion of a transaction with the reader, or when the voltage $u_2$ falls below a minimum value.

In *passive transponders* the data carrier has to obtain its power supply from the voltage $u_2$. To achieve this, the voltage $u_2$ is converted into direct current using a low loss bridge rectifier and then smoothed. A simple basic circuit for this application is shown in Figure 3.18.

#### 4.1.8.2 Voltage Regulation

The induced voltage $u_2$ in the transponder coil very rapidly reaches high values due to resonance step-up in the resonant circuit. Considering the example in Figure 4.14, if we increase the coupling coefficient $k$ – possibly by reducing the gap between reader and transponder – or the value of the load resistor $R_L$, then voltage $u_2$ will reach a level much greater than 100 V. However, the operation of a data carrier requires a constant *operating voltage* of 3–5 V (after rectification).

In order to regulate voltage $u_2$ independently of the coupling coefficient $k$ or other parameters, and to hold it constant in practice, a voltage-dependent shunt resistor $R_S$ is connected in parallel with the load resistor $R_L$. The equivalent circuit diagram for this is shown in Figure 4.17.

As induced voltage $u_{Q2} = u_i$ increases, the value of the shunt resistor $R_S$ falls, thus reducing the quality of the transponder resonant circuit to such a degree that the voltage $u_2$ remains constant. To calculate the value of the shunt resistor for different variables, we refer back to Equation (4.29) and introduce the parallel connection of $R_L$ and $R_S$ in place of the constant load resistor $R_L$. The equation can now be solved with respect to $R_S$. The variable voltage $u_2$ is replaced by the constant voltage $u_{Transp}$ – the desired input voltage of the data carrier – giving the following equation for $R_S$:

$$R_S = \left| \frac{\dfrac{1}{\left(\dfrac{j\omega \cdot k \cdot \sqrt{L_1 L_2} \cdot i_1}{u_{Transp}}\right) - 1}}{\dfrac{j\omega L_2 + R_2}{} - j\omega C_2 - \dfrac{1}{R_L}} \right| \Big|_{u_{2\text{- unreg}} > u_{Transp}} \tag{4.32}$$

Figure 4.18 shows the graph of voltage $u_2$ when such an 'ideal' shunt regulator is used. Voltage $u_2$ initially increases in proportion with the coupling coefficient $k$. When $u_2$ reaches its desired value, the value of the shunt resistor begins to fall in inverse proportion to $k$, thus maintaining an almost constant value for voltage $u_2$.

Figure 4.19 shows the variable value of the shunt resistor $R_S$ as a function of the coupling coefficient. In this example the value range for the shunt resistor covers several powers of ten. This can only be achieved using a semiconductor circuit, therefore so-called *shunt* or *parallel regulators* are used in inductively coupled transponders. These terms describe an electronic regulator circuit, the internal resistance of which falls disproportionately sharply when a threshold voltage is exceeded. A simple shunt regulator based upon a zener diode (Nührmann, 1994) is shown in Figure 4.20.

### 4.1.9 Interrogation Field Strength $H_{min}$

We can now use the results obtained in Section 4.1.7 to calculate the *interrogation field strength* of a transponder. This is the minimum field strength $H_{min}$ (at a maximum distance $x$ between

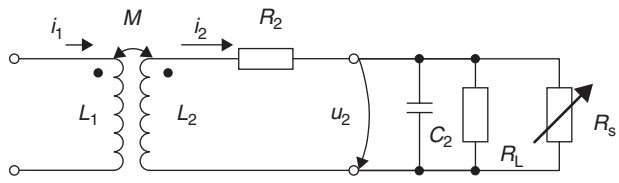


**Figure 4.17** Operating principle for voltage regulation in the transponder using a shunt regulator

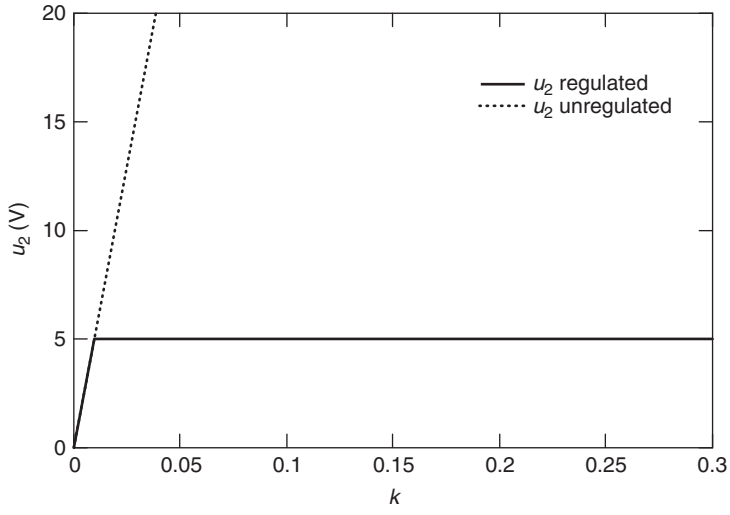


**Figure 4.18** Example of the path of voltage $u_2$ with and without shunt regulation in the transponder, where the coupling coefficient $k$ is varied by altering the distance between transponder and reader antenna. (The calculation is based upon the following parameters: $i_1 = 0.5$ A, $L_1 = 1\,\mu$H, $L_2 = 3.5\,\mu$H, $R_L = 2$ k$\Omega$, $C_2 = 1/\omega_2 L_2$)

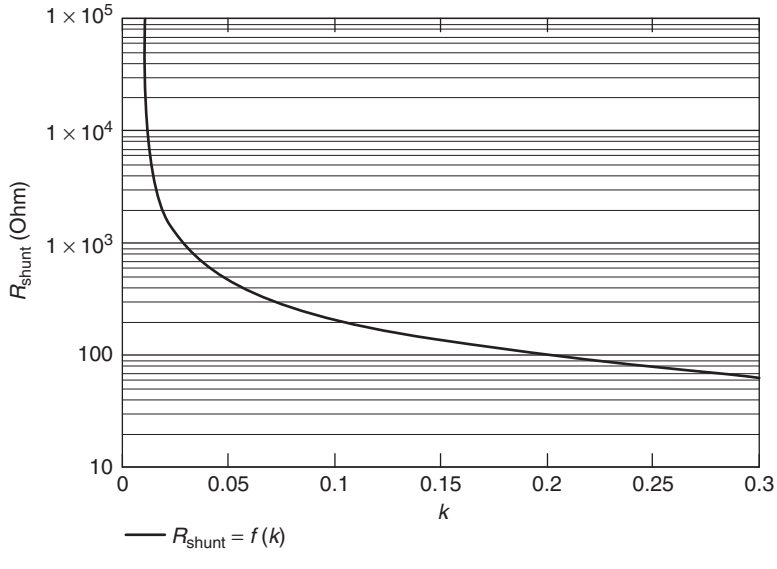


**Figure 4.19** The value of the shunt resistor $R_S$ must be adjustable over a wide range to keep voltage $u_2$ constant regardless of the coupling coefficient $k$ (parameters as Figure 4.18)

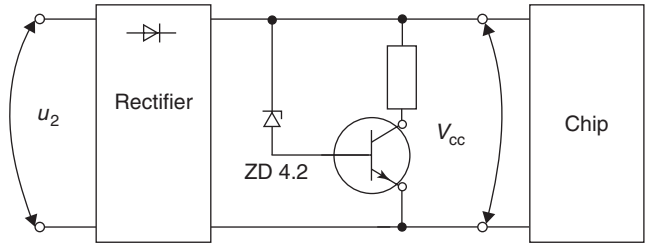


**Figure 4.20** Example circuit for a simple shunt regulator

transponder and reader) at which the supply voltage $u_2$ is just high enough for the operation of the data carrier.

However, $u_2$ is not the internal operating voltage of the data carrier (3 or 5 V) here; it is the *RF input voltage* at the terminal of the transponder coil $L_2$ on the data carrier, i.e. prior to rectification. The voltage regulator (shunt regulator) should not yet be active at this supply voltage. $R_L$ corresponds with the input resistance of the data carrier after the 'power on reset', $C_2$ is made up of the input capacitance $C_p$ of the data carrier (chip) and the parasitic capacitance of the transponder layout $C_2' : C_2 = (C_2' + C_p)$.

The inductive voltage (source voltage $u_{Q2} = u_i$) of a transponder coil can be calculated using Equation (4.21) for the general case. If we assume a homogeneous, sinusoidal magnetic field in air (permeability constant $= \mu_0$) we can derive the following, more appropriate, formula:

$$u_i = \mu_0 \cdot A \cdot N \cdot \omega \cdot H_{eff} \tag{4.33}$$

where $H_{eff}$ is the effective field strength of a sinusoidal magnetic field, $\omega$ is the angular frequency of the magnetic field, $N$ is the number of windings of the transponder coil $L_2$, and $A$ is the cross-sectional area of the transponder coil.

We now replace $u_{Q2} = u_i = j\omega M \cdot i_1$ from Equation (4.29) with Equation (4.33) and thus obtain the following equation for the circuit in Figure 4.13:

$$u_2 = \frac{j\omega \cdot \mu_0 \cdot H_{eff} \cdot A \cdot N}{1 + (j\omega L_2 + R_2)\left(\dfrac{1}{R_L} + j\omega C_2\right)} \tag{4.34}$$

Multiplying out the denominator:

$$u_2 = \frac{j\omega \cdot \mu_0 \cdot H_{eff} \cdot A \cdot N}{j\omega\left(\dfrac{L_2}{R_L} + R_2 C_2\right) + \left(1 - \omega^2 L_2 C_2 + \dfrac{R_2}{R_L}\right)} \tag{4.35}$$

We now solve this equation for $H_{eff}$ and obtain the value of the complex form. This yields the following relationship for the interrogation field $H_{min}$ in the general case:

$$H_{min} = \frac{u_2 \cdot \sqrt{\left(\dfrac{\omega L_2}{R_L} + \omega R_2 C_2\right)^2 + \left(1 - \omega^2 L_2 C_2 + \dfrac{R_2}{R_L}\right)^2}}{\omega \cdot \mu_0 \cdot A \cdot N} \tag{4.36}$$

A more detailed analysis of Equation (4.36) shows that the interrogation field strength is dependent upon the frequency $\omega = 2\pi f$ in addition to the antenna area $A$, the number of windings $N$ (of the transponder coil), the minimum voltage $u_2$ and the input resistance $R_2$. This is not surprising, because we have determined a resonance step-up of $u_2$ at the resonant frequency of the transponder resonant circuit. Therefore, when the transmission frequency of the reader corresponds to the resonant frequency of the transponder, the interrogation field strength $H_{\min}$ is at its minimum value.

To optimise the interrogation sensitivity of an inductively coupled RFID system, the resonant frequency of the transponder should be matched precisely to the transmission frequency of the reader. Unfortunately, this is not always possible in practice. First, tolerances occur during the manufacture of a transponder, which lead to a deviation in the transponder resonant frequency. Second, there are also technical reasons for setting the resonant frequency of the transponder a few percentage points higher than the transmission frequency of the reader (for example in systems using anticollision procedures to keep the interaction of nearby transponders low).

Some semiconductor manufacturers incorporate additional smoothing capacitors into the transponder chip to smooth out frequency deviations in the transponder caused by manufacturing tolerances (see Figure 3.28 'tuning C'). During manufacture the transponder is adjusted to the desired frequency by switching individual smoothing capacitors on and off (Schürmann, 1993).

In Equation (4.36) the resonant frequency of the transponder is expressed as the product $L_2C_2$. This is not recognisable at first glance. In order to make a direct prediction regarding the frequency dependency of interrogation sensitivity, we rearrange Equation (4.25) to obtain:

$$L_2C_2 = \frac{1}{(2\pi f_0)^2} = \frac{1}{\omega_0^2} \tag{4.37}$$

By substituting this expression into the right-hand term under the root of Equation (4.36) we obtain a function in which the dependence of the interrogation field strength $H_{\min}$ on the relationship between the transmission frequency of the reader $\omega$ and the resonant frequency of the transponder $\omega_0$ is clearly expressed. This is based upon the assumption that the change in the resonant frequency of the transponder is caused by a change in the capacitance of $C_2$ (e.g. due to temperature dependence or manufacturing tolerances of this capacitance), whereas the inductance $L_2$ of the coil remains constant. To express this, the capacitor $C_2$ in the left-hand term under the root of Equation (4.36) is replaced by $C_2 = (\omega_0^2 \cdot L_2)^{-1}$:

$$H_{\min} = \frac{u_2 \cdot \sqrt{\omega^2\left(\frac{L_2}{R_L} + \frac{R_2}{\omega_0^2 L_2}\right)^2 + \left(\frac{\omega_0^2 - \omega^2}{\omega_0^2} + \frac{R_2}{R_L}\right)^2}}{\omega \cdot \mu_0 \cdot A \cdot N} \tag{4.38}$$

Therefore a deviation of the transponder resonant frequency from the transmission frequency of the reader will lead to a higher transponder interrogation field strength and thus to a lower *read range*.

#### 4.1.9.1 Energy Range of Transponder Systems

If the interrogation field strength of a transponder is known, then we can also assess the energy range associated with a certain reader. The *energy range* of a transponder is the distance from the reader antenna at which there is just enough energy to operate the transponder (defined by $u_{2\min}$ and $R_L$). However, the question of whether the energy range obtained corresponds to the maximum functional range of the system also depends upon whether the data transmitted from the transponder can be detected by the reader at the distance in question.

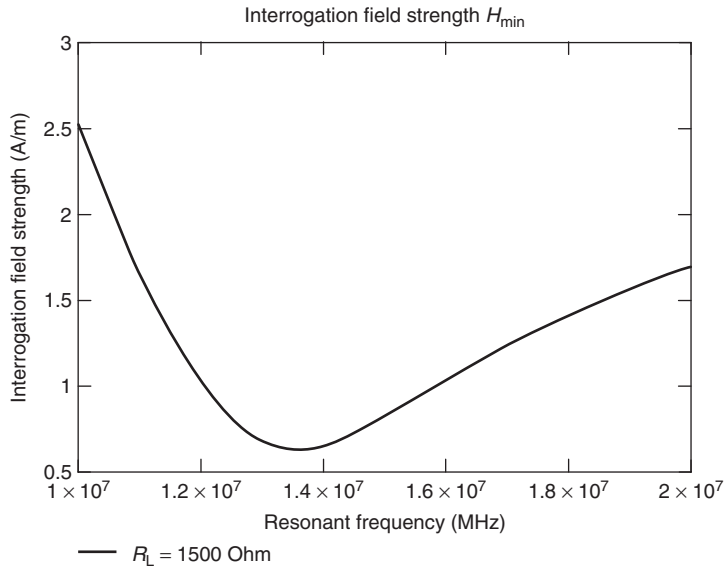


**Figure 4.21** Interrogation sensitivity of a contactless smart card where the transponder resonant frequency is detuned in the range 10–20 MHz ($N = 4$, $A = 0.05 \times 0.08\,\mathrm{m}^2$, $u_2 = 5\mathrm{V}$, $L_2 = 3.5\,\mu\mathrm{H}$, $R_2 = 5\Omega$, $R_L = 1.5\,\mathrm{k}\Omega$). If the transponder resonant frequency deviates from the transmission frequency (13.56 MHz) of the reader an increasingly high field strength is required to address the transponder. In practical operation this results in a reduction of the read range

Given a known antenna current[2] $I$, radius $R$, and number of windings of the transmitter antenna $N_1$, the path of the field strength in the $x$ direction can be calculated using Equation (4.3) (see Section 4.1.1.1). If we solve the equation with respect to $x$ we obtain the following relationship between the energy range and interrogation field $H_{min}$ of a transponder for a given reader:

$$x = \sqrt{\sqrt[3]{\left(\frac{I \cdot N_1 \cdot R^2}{2 \cdot H_{min}}\right)^2} - R^2} \tag{4.39}$$

As an example (see Figure 4.22), let us now consider the energy range of a transponder as a function of the power consumption of the data carrier ($R_L = u_2/i_2$). The reader in this example generates a field strength of 0.115 A/m at a distance of 80 cm from the transmitter antenna (radius $R$ of transmitter antenna: 40 cm). This is a typical value for RFID systems in accordance with ISO 15693.

As the current consumption of the transponder (lower $R_L$) increases, the interrogation sensitivity of the transponder also increases and the energy range falls.

The maximum energy range of the transponder is determined by the distance between transponder and reader antenna at which the minimum power supply $u_{2\,min}$ required for the operation of the data carrier exists, even with an unloaded transponder resonant circuit (i.e. $i_2 \to 0$, $R_L \to \infty$). Where distance $x = 0$ the maximum current $i_2$ represents a limit, above which the supply voltage for the data carrier falls below $u_{2\,min}$, which means that reliable operation of the data carrier can no longer be guaranteed in this operating state.

[2] If the antenna current of the transmitter antenna is not known it can be calculated from the measured field strength $H(x)$ at a distance $x$, where the antenna radius $R$ and the number of windings $N_1$ are known (see Section 4.1.1.1).

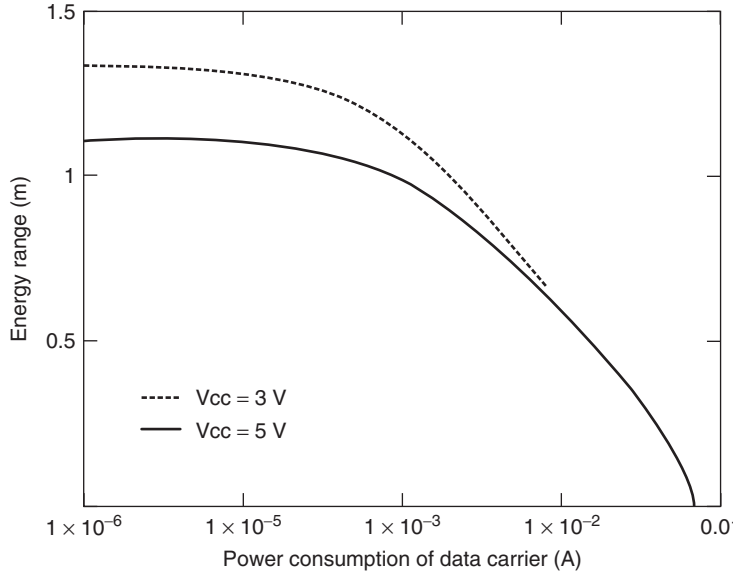


**Figure 4.22** The energy range of a transponder also depends upon the power consumption of the data carrier ($R_L$). The transmitter antenna of the simulated system generates a field strength of 0.115 A/m at a distance of 80 cm, a value typical for RFID systems in accordance with ISO 15693 (transmitter: $I = 1$A, $N_1 = 1$, $R = 0.4$ m. Transponder: $A = 0.048 \times 0.076$ m$^2$ (smart card), $N = 4$, $L_2 = 3.6\,\mu$H, $u_{2\min} = 5$V/3V)

#### 4.1.9.2 Interrogation Zone of Readers

In the calculations above the implicit assumption was made of a homogeneous magnetic field $H$ parallel to the coil axis $x$. A glance at Figure 4.23 shows that this only applies for an arrangement of reader coil and transponder coil with a common central axis $x$. If the transponder is tilted away from this central axis or displaced in the direction of the $y$ or $z$ axis this condition is no longer fulfilled.

If a coil is magnetised by a magnetic field $H$, which is tilted by the angle $\vartheta$ in relation to the central axis of the coil, then, in very general terms, the following applies:

$$u_{0\vartheta} = u_0 \cdot \cos(\vartheta) \tag{4.40}$$

where $u_0$ is the voltage that is induced when the coil is perpendicular to the magnetic field. At an angle $\vartheta = 90^\circ$, in which case the field lines run in the plane of the coil radius $R$, no voltage is induced in the coil.

As a result of the bending of the *magnetic field lines* in the entire area around the reader coil, here too there are different angles $\vartheta$ of the magnetic field $H$ in relation to the transponder coil. This leads to a characteristic *interrogation zone* (Figure 4.24, grey area) around the reader antenna. Areas with an angle $\vartheta = 0^\circ$ in relation to the transponder antenna – for example along the coil axis $x$, but also to the side of the antenna windings (returning field lines) – give rise to an optimal read range. Areas in which the magnetic field lines run parallel to the plane of the transponder coil radius $R$ – for example, exactly above and below the coil windings – exhibit a significantly reduced read range. If the transponder itself is tilted through 90° a completely different picture of the interrogation zone emerges (Figure 4.24, dotted line). Field lines that run parallel to the $R$-plane of the reader coil now penetrate the transponder coil at an angle $\vartheta = 0^\circ$ and thus lead to an optimal *range* in this area.

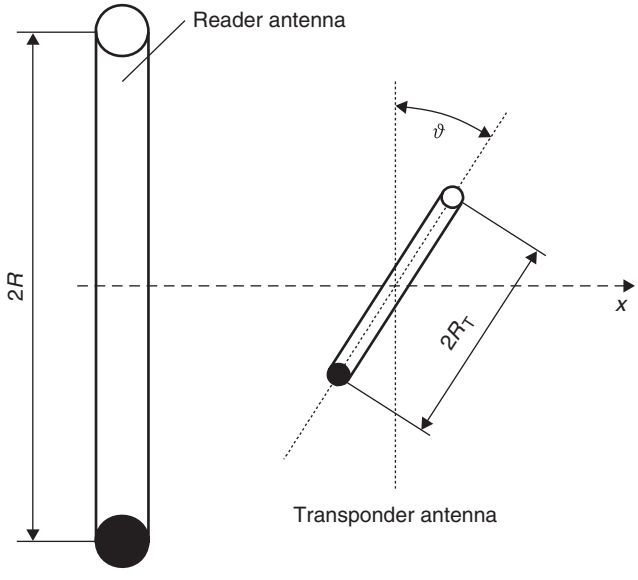


**Figure 4.23** Cross-section through reader and transponder antennas. The transponder antenna is tilted at an angle $\vartheta$ in relation to the reader antenna

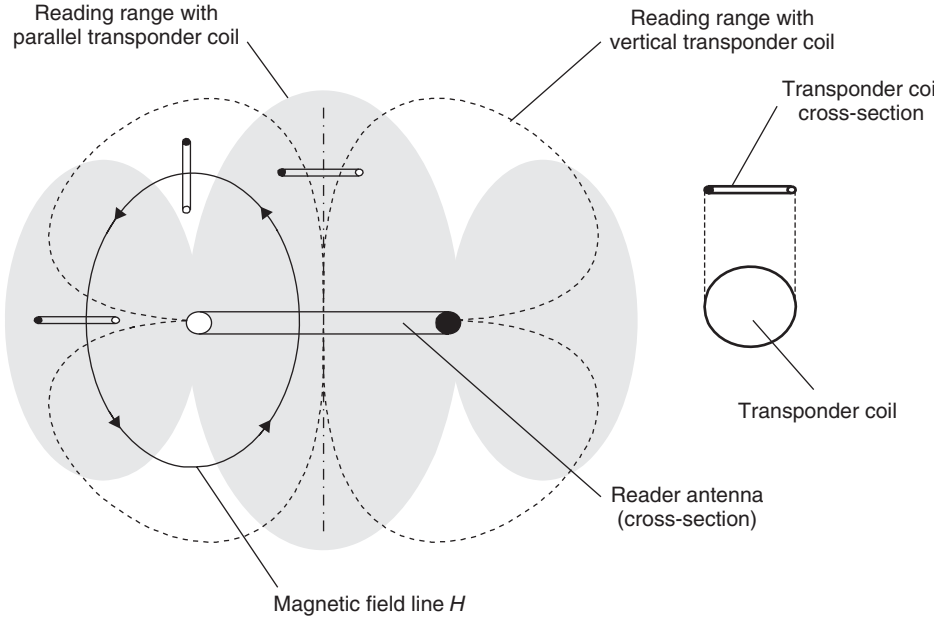


**Figure 4.24** Interrogation zone of a reader at different alignments of the transponder coil

### 4.1.10 Total Transponder–Reader System

Up to this point we have considered the characteristics of inductively coupled systems primarily from the point of view of the transponder. In order to analyse in more detail the interaction between transponder and *reader* in the system, we need to take a slightly different view and first examine the electrical properties of the reader so that we can then go on to study the system as a whole.

Figure 4.25 shows the equivalent circuit diagram for a reader (the practical realisation of this circuit configuration can be found in Section 11.4). The *conductor loop* necessary to generate the magnetic alternating field is represented by the coil $L_1$. The series resistor $R_1$ corresponds with the ohmic losses of the wire resistance in the conductor loop $L_1$. In order to obtain maximum current in the conductor coil $L_1$ at the reader *operating frequency* $f_{TX}$, a *series resonant circuit* with the resonant frequency $f_{RES} = f_{TX}$ is created by the serial connection of the capacitor $C_1$. The resonant frequency of the series resonant circuit can be calculated very easily using the Thomson equation (4.25). The operating state of the reader can be described by:

$$f_{TX} = f_{RES} = \frac{1}{2\pi\sqrt{L_1 \cdot C_1}} \tag{4.41}$$

Because of the series configuration, the total impedance $Z_1$ of the series resonant circuit is the sum of individual impedances, i.e.:

$$Z_1 = R_1 + j\omega L_1 + \frac{1}{j\omega C_1} \tag{4.42}$$

At the resonant frequency $f_{RES}$, however, the impedances of $L_1$ and $C_1$ cancel each other out. In this case the total impedance $Z_1$ is determined by $R_1$ only and thus reaches a minimum.

$$j\omega L_1 + \frac{1}{j\omega C_1} = 0\Big|_{\omega=2\pi\cdot f_{RES}} \Rightarrow Z_1(f_{RES}) = R_1 \tag{4.43}$$

The *antenna current* $i_1$ reaches a maximum at the resonant frequency and is calculated (based upon the assumption of an ideal voltage source where $R_i = 0$) from the source voltage $u_0$ of the transmitter high level stage, and the ohmic coil resistance $R_1$.

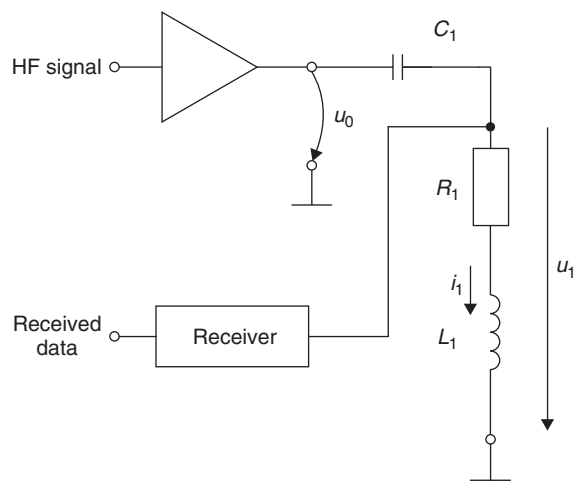


**Figure 4.25** Equivalent circuit diagram of a reader with antenna $L_1$. The transmitter output branch of the reader generates the RF voltage $u_0$. The receiver of the reader is directly connected to the antenna coil $L_1$

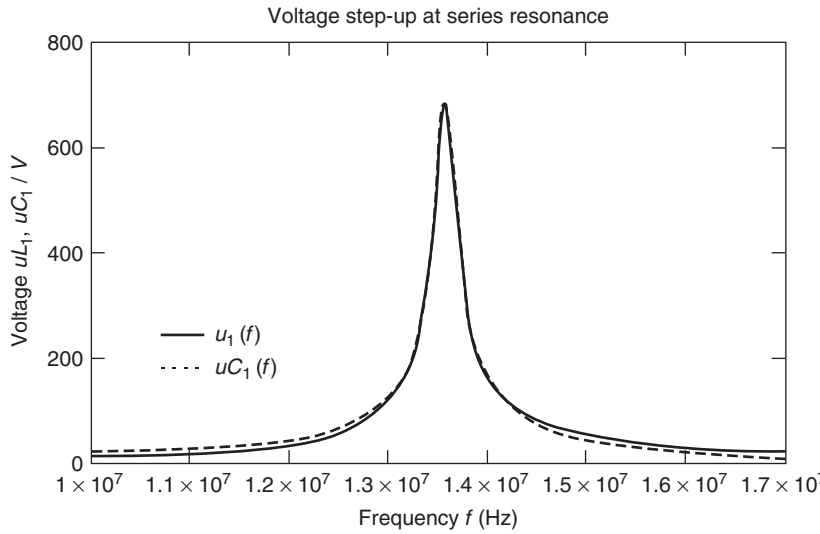


**Figure 4.26** Voltage step-up at the coil and capacitor in a series resonant circuit in the frequency range 10–17 MHz ($f_{RES} = 13.56$ MHz, $u_0 = 10$ V(!), $R_1 = 2.5\Omega$, $L_1 = 2\,\mu$H, $C_1 = 68.8$ pF). The voltage at the conductor coil and series capacitor reaches a maximum of above 700 V at the resonant frequency. Because the resonant frequency of the reader antenna of an inductively coupled system always corresponds to the transmission frequency of the reader, components should be sufficiently voltage resistant

$$i_1(f_{res}) = \frac{u_0}{Z_1(f_{RES})} = \frac{u_0}{R_1} \tag{4.44}$$

The two voltages, $u_1$ at the conductor loop $L_1$, and $u_{C1}$ at the capacitor $C_1$, are in antiphase and cancel each other out at the resonant frequency because current $i_1$ is the same. However, the individual values may be very high. Despite the low source voltage $u_0$, which is usually just a few volts, figures of a few hundred volts can easily be reached at $L_1$ and $C_1$. Designs for *conductor loop antennas* for high currents must therefore incorporate sufficient voltage resistance in the components used, in particular the capacitors, because otherwise these would easily be destroyed by arcing. Figure 4.26 shows an example of voltage step-up at resonance.

Despite the fact that the voltage may reach very high levels, it is completely safe to touch the voltage-carrying components of the reader antenna. Because of the additional capacitance of the hand, the series resonant circuit is rapidly detuned, thus reducing the resonance step-up of voltage.

#### 4.1.10.1 Transformed Transponder Impedance $Z'_T$

If a transponder enters the magnetic alternating field of the conductor coil $L_1$ a change can be detected in the current $i_1$. The current $i_2$ induced in the transponder coil thus acts upon current $i_1$ responsible for its generation via the magnetic *mutual inductance* $M$.[3]

In order to simplify the mathematical description of the mutual inductance on the current $i_1$, let us now introduce an imaginary impedance, the *complex transformed transponder impedance* $Z'_T$.

[3] This is in accordance with Lenz's law, which states that 'the induced voltage always attempts to set up a current in the conductor circuit, the direction of which opposes that of the voltage that induced it' (Paul, 1993).

The electrical behaviour of the reader's series resonant circuit in the presence of mutual inductance is as if the imaginary impedance $Z'_T$ were actually present as a discrete component: $Z'_T$ takes on a finite value $|Z'_T| > 0$. If the mutual inductance is removed, e.g. by withdrawing the transponder from the field of the conductor loop, then $|Z'_T| = 0$. We will now derive the calculation of this transformed impedance step by step.

The source voltage $u_0$ of the reader can be divided into the individual voltages $u_{C1}, u_{R1}, u_{L1}$ and $u_{ZT}$ in the series resonant circuit, as illustrated in Figure 4.27. Figure 4.28 shows the vector diagram for the individual voltages in this circuit at resonance.

Due to the constant current $i_1$ in the series circuit, the source voltage $u_0$ can be represented as the sum of the products of the individual impedances and the current $i_1$. The transformed impedance $Z'_T$ is expressed by the product $j\omega M \cdot i_2$:

$$u_0 = \frac{1}{j\omega C_1} \cdot i_1 + j\omega L_1 \cdot i_1 + R_1 \cdot i_1 - j\omega M \cdot i_2 \tag{4.45}$$

Since the series resonant circuit is operated at its *resonant frequency*, the individual impedances $(j\omega C_1)^{-1}$ and $j\omega L_1$ cancel each other out. The voltage $u_0$ is therefore only divided between the resistance $R_1$ and the transformed transponder impedance $Z'_T$, as we can see from the vector diagram (Figure 4.28). Equation 4.45 can therefore be further simplified to:

$$u_0 = R_1 \cdot i_1 - j\omega M \cdot i_2 \tag{4.46}$$

We now require an expression for the current $i_2$ in the coil of the transponder, so that we can calculate the value of the transformed transponder impedance. Figure 4.29 gives an overview of the currents and voltages in the transponder in the form of an equivalent circuit diagram:

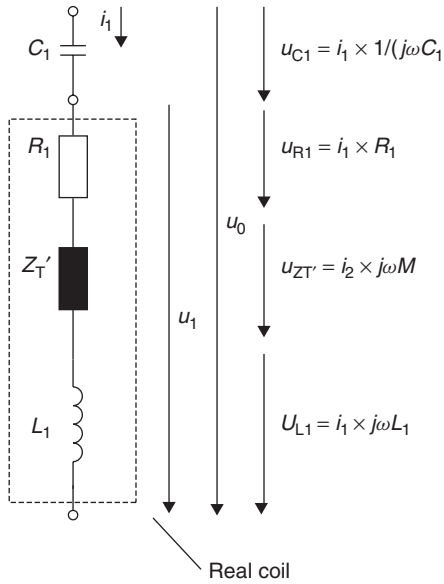


**Figure 4.27** Equivalent circuit diagram of the series resonant circuit – the change in current $i_1$ in the conductor loop of the transmitter due to the influence of a magnetically coupled transponder is represented by the impedance $Z'_T$

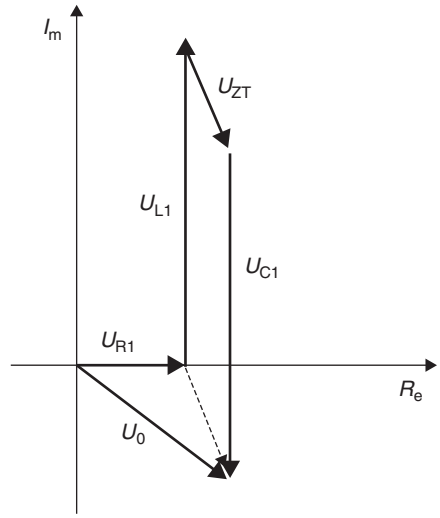


**Figure 4.28** The vector diagram for voltages in the series resonance circuit of the reader antenna at resonant frequency. The figures for individual voltages $u_{L1}$ and $u_{C1}$ can reach much higher levels than the total voltage $u_0$

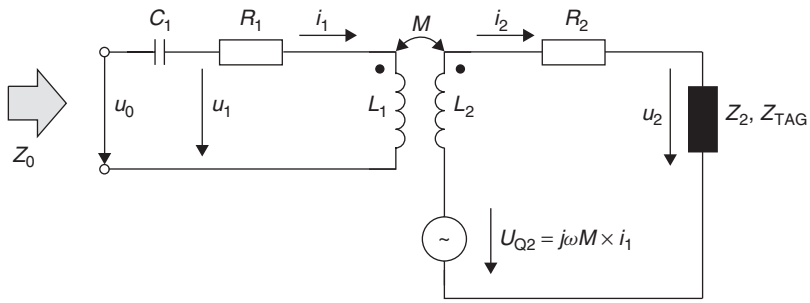


**Figure 4.29** Simple equivalent circuit diagram of a transponder in the vicinity of a reader. The impedance $Z_2$ of the transponder is made up of the load resistor $R_L$ (data carrier) and the capacitor $C_2$

The source voltage $u_{Q2}$ is induced in the transponder coil $L_2$ by mutual inductance $M$. The current $i_2$ in the transponder is calculated from the quotient of the voltage $u_2$ divided by the sum of the individual impedances $j\omega L_2$, $R_2$ and $Z_2$ (here $Z_2$ represents the total input impedance of the data carrier and the parallel capacitor $C_2$). In the next step, we replace the voltage $u_{Q2}$ by the voltage responsible for its generation $u_{Q2} = j\omega M \cdot i_1$, yielding the following expression for $u_0$:

$$u_0 = R_1 \cdot i_1 - j\omega M \cdot \frac{u_{Q2}}{R_2 + j\omega L_2 + Z_2} = R_1 \cdot i_1 - j\omega M \cdot \frac{j\omega M \cdot i_1}{R_2 + j\omega L_2 + Z_2} \tag{4.47}$$

As it is generally impractical to work with the mutual inductance $M$, in a final step we replace $M$ with $M = k\sqrt{L_1 \cdot L_2}$ because the values $k$, $L_1$ and $L_2$ of a transponder are generally known.

We write:

$$u_0 = R_1 \cdot i_1 + \frac{\omega^2 k^2 \cdot L_1 \cdot L_2}{R_2 + j\omega L_2 + Z_2} \cdot i_1 \tag{4.48}$$

Dividing both sides of Equation (4.48) by $i_1$ yields the total impedance $Z_0 = u_0/i_1$ of the series resonant circuit in the reader as the sum of $R_1$ and the transformed transponder impedance $Z'_{\mathrm{T}}$. Thus $Z'_{\mathrm{T}}$ is found to be:

$$Z'_{\mathrm{T}} = \frac{\omega^2 k^2 \cdot L_1 \cdot L_2}{R_2 + j\omega L_2 + Z_2} \tag{4.49}$$

Impedance $Z_2$ represents the parallel connection of $C_2$ and $R_{\mathrm{L}}$ in the transponder. We replace $Z_2$ with the full expression containing $C_2$ and $R_{\mathrm{L}}$ and thus finally obtain an expression for $Z'_{\mathrm{T}}$ that incorporates all components of the transponder and is thus applicable in practice:

$$Z'_{\mathrm{T}} = \frac{\omega^2 k^2 \cdot L_1 \cdot L_2}{R_2 + j\omega L_2 + \dfrac{R_{\mathrm{L}}}{1 + j\omega R_{\mathrm{L}} C_2}} \tag{4.50}$$

#### 4.1.10.2 Influencing Variables of $Z'_{\mathrm{T}}$

Let us now investigate the influence of individual parameters on the *transformed transponder impedance* $Z'_{\mathrm{T}}$. In addition to line diagrams, locus curves are also suitable for this investigation: there is precisely one vector in the complex $Z$ plane for every parameter value $x$ in the function $Z'_{\mathrm{T}} = f(\mathrm{x})$ and thus exactly one point on the curve.

All line diagrams and locus curves in Section 4.1.10 are – unless stated otherwise – calculated using the constant parameter values listed in Table 4.3.

##### *4.1.10.2.1 Transmission Frequency $f_{\mathrm{TX}}$*

Let us first change the *transmission frequency* $f_{\mathrm{TX}}$ of the reader, while the transponder resonant frequency $f_{\mathrm{RES}}$ is kept constant. Although this case does not occur in practice it is very useful as a theoretical experiment to help us to understand the principles behind the transformed transponder impedance $Z'_{\mathrm{T}}$.

Figure 4.30 shows the locus curve $Z'_{\mathrm{T}} = f(f_{\mathrm{TX}})$ for this case. The impedance vector $Z'_{\mathrm{T}}$ traces a circle in the clockwise direction in the complex $Z$ plane as transmission frequency $f_{\mathrm{TX}}$ increases.

In the frequency range below the transponder resonant frequency ($f_{\mathrm{TX}} < f_{\mathrm{RES}}$) the impedance vector $Z'_{\mathrm{T}}$ is initially found in quadrant I of the complex $Z$ plane. The transformed transponder impedance $Z'_{\mathrm{T}}$ is inductive in this frequency range.

If the transmission frequency precisely corresponds with the transponder resonant frequency ($f_{\mathrm{TX}} = f_{\mathrm{RES}}$) then the reactive impedances for $L_2$ and $C_2$ in the transponder cancel each other out.

**Table 4.3** Parameters for line diagrams and locus curves, if not stated otherwise

| | |
|---|---|
| $L_1 = 1\,\mu\mathrm{H}$ | $L_2 = 3.5\,\mu\mathrm{H}$ |
| $C_1 = 1/(\omega_{\mathrm{TX}})^2 \cdot L_1$ (resonance) | $R_2 = 5\Omega$ |
| $C_2 = 1/(\omega_{\mathrm{RX}})^2 \cdot L_2$ (resonance) | $R_{\mathrm{L}} = 5\ \mathrm{k}\Omega$ |
| $f_{\mathrm{RES}} = f_{\mathrm{TX}} = 13.56$ MHz | $k = 15\%$ |

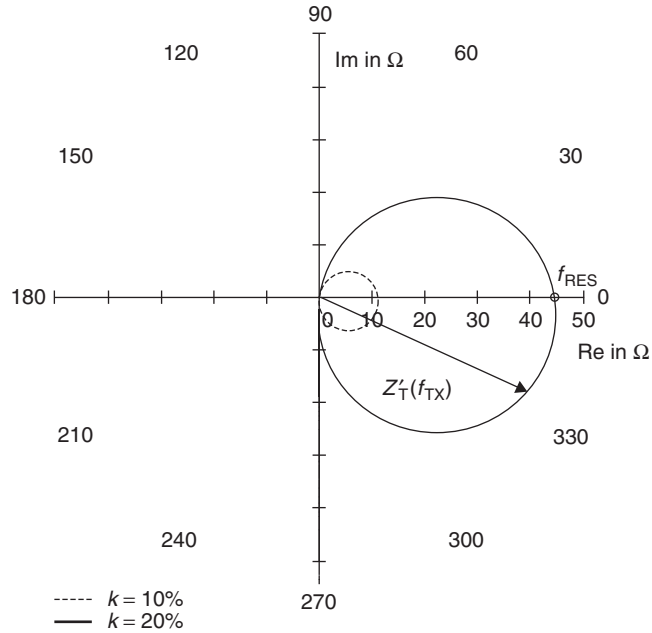


**Figure 4.30** The impedance locus curve of the complex transformed transponder impedance $Z'_T$ as a function of transmission frequency ($f_{TX} = 1–30\,\text{MHz}$) of the reader corresponds to the impedance locus curve of a parallel resonant circuit

$Z'_T$ acts as an ohmic (real) resistor – the locus curve thus intersects the real $x$ axis of the complex $Z$ plane at this point.

In the frequency range above the transponder resonant frequency ($f_{TX} > f_{RES}$), the locus curve finally passes through quadrant IV of the complex $Z$ plane – $Z'_T$ has a capacitive effect in this range.

The impedance locus curve of the complex transformed transponder impedance $Z'_T$ corresponds with the impedance locus curve of a damped parallel resonant circuit with a parallel resonant frequency equal to the resonant frequency of the transponder. Figure 4.31 shows an equivalent circuit diagram for this. The complex current $i_2$ in the coil $L_2$ of the transponder resonant circuit is transformed by the magnetic mutual inductance $M$ in the antenna coil $L_1$ of the reader and acts there as a parallel resonant circuit with the (frequency-dependent) impedance $Z'_T$. The value of the real resistor $R'$ in the equivalent circuit diagram corresponds to the point of intersection of the locus curve $Z'_T$ with the real axis in the $Z$ plane.

#### *4.1.10.2.2 Coupling Coefficient k*

Given constant geometry of the transponder and reader antenna, the *coupling coefficient* k is defined by the distance and angle of the two coils in relation to each other (see Section 4.1.5). The influence of metals in the vicinity of the transmitter or transponder coil on the coupling coefficient should not be disregarded (e.g. shielding effect caused by eddy current losses). In practice, therefore, the coupling coefficient is the parameter that varies the most. Figure 4.32 shows the locus curve of the complex transformed transponder impedance for the range $0 \leq k \leq 1$.

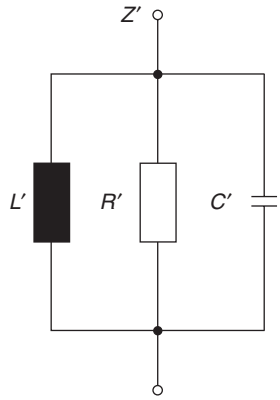


**Figure 4.31** The equivalent circuit diagram of complex transformed transponder impedance $Z'_T$ is a damped parallel resonant circuit

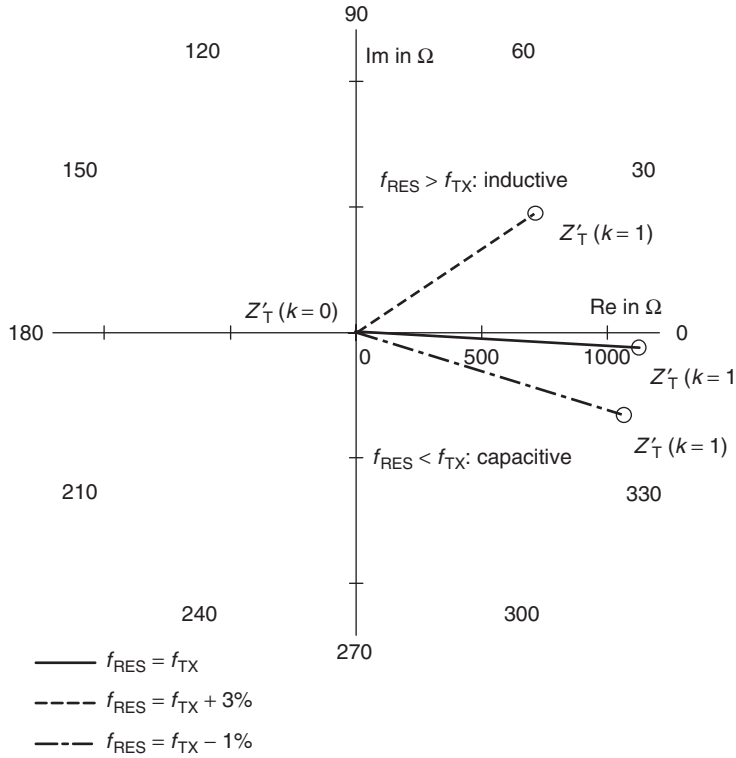


**Figure 4.32** The locus curve of $Z'_T(k = 0{-}1)$ in the complex impedance plane as a function of the coupling coefficient $k$ is a straight line

We differentiate between three ranges:

- $k = 0$: If the transponder coil $L_2$ is removed from the field of the reader antenna $L_1$ entirely, then no mutual inductance occurs. For this limit case, the transformed transponder impedance is no longer effective, that is $Z'_T(k = 0) = 0$.
- $0 < k < 1$: If the transponder coil $L_2$ is slowly moved towards the reader antenna $L_1$, then the coupling coefficient, and thus also the mutual inductance $M$ between the two coils, increases continuously. The value of complex transformed transponder impedance increases proportionately, whereby $Z'_T \sim k_2$. When $f_{TX}$ exactly corresponds with $f_{RES}$, $Z'_T(k)$ remains real for all values of $k$.[4] Given a detuning of the transponder resonant frequency ($f_{RES} \neq f_{TX}$), on the other hand, $Z'_T$ also has an inductive or capacitive component.
- $k = 1$: This case only occurs if both coils are identical in format, so that the windings of the two coils $L_1$ and $L_2$ lie directly on top of each other at distance $d = 0$. $Z'_T(k)$ reaches a maximum in this case. In general the following applies: $|Z'_T(k)_{max}| = |Z'_T(K_{max})|$.

#### *4.1.10.2.3 Transponder Capacitance $C_2$*

We will now change the value of transponder capacitance $C_2$, while keeping all other parameters constant. This naturally detunes the resonant frequency $f_{RES}$ of the transponder in relation to the transmission frequency $f_{TX}$ of the reader. In practice, different factors may be responsible for a change in $C_2$:

- manufacturing tolerances, leading to a static deviation from the target value;
- a dependence of the data carrier's input capacitance on the input voltage $u_2$ due to effects in the semiconductor: $C_2 = f(u_2)$;
- intentional variation of the capacitance of $C_2$ for the purpose of data transmission (we will deal with so-called 'capacitive load modulation' in more detail in Section 4.1.10.3);
- detuning due to environmental influences such as metal, temperature, moisture, and 'hand capacitance' when the smart card is touched.

Figure 4.33 shows the locus curve for $Z'_T(C_2)$ in the complex impedance plane. As expected, the locus curve obtained is the circle in the complex $Z$ plane that is typical of a parallel resonant circuit. Let us now consider the extreme values for $C_2$:

- $C_2 = 1/\omega_{TX}^2 L_2$: The resonant frequency of the transponder in this case precisely corresponds with the transmission frequency of the reader (see Equation 4.25). The current $i_2$ in the transponder coil reaches a maximum at this value due to resonance step-up and is real. Because $Z'_T \sim j\omega M \cdot i_2$ the value for impedance $Z'_T$ also reaches a maximum – the locus curve intersects the real axis in the complex $Z$ plane. The following applies: $|Z'_T(C_2)|_{max} = |Z'_T(C_2 = 1/\omega_{TX})^2 \cdot L_2)|$.
- $C_2 \neq 1/\omega^2 L_2$: If the capacitance $C_2$ is less than or greater than $C_2 = 1/\omega_{TX}^2 L_2$ then the resonant frequency of the transponder will be detuned and will vary significantly from the transmission frequency of the reader. The polarity of the current $i_2$ in the resonant circuit of the transponder varies when the resonant frequency is exceeded, as we can see from Figure 4.34. Similarly, the locus curve of $Z'_T$ describes the familiar circular path in the complex $Z$ plane. For both extreme values:

$$Z'_T(C_2 \to 0) = \frac{\omega^2 k^2 \cdot L_1 \cdot L_2}{j\omega L_2 + R_2 + R_L} \tag{4.51}$$

[4] The low angular deviation in the locus curve in Figure 4.32 where $f_{RES} = f_{TX}$ is therefore due to the fact that the resonant frequency calculated according to Equation (4.34) is only valid without limitations for the undamped parallel resonant circuit. Given damping by $R_L$ and $R_2$, on the other hand, there is a slight detuning of the resonant frequency. However, this effect can be largely disregarded in practice and thus will not be considered further here.

(no resonance step-up)

$$Z'_{\mathrm{T}}(C_2 \to \infty) = \frac{\omega^2 k^2 \cdot L_1 \cdot L_2}{j\omega L_2 + R_2} \tag{4.52}$$

('short-circuited' transponder coil).

#### *4.1.10.2.4 Load Resistance $R_L$*

The *load resistance* $R_{\mathrm{L}}$ is an expression for the *power consumption* of the data carrier (microchip) in the transponder. Unfortunately, the load resistance is generally not constant, but falls as the coupling coefficient increases due to the influence of the shunt regulator (voltage regulator). The power consumption of the data carrier also varies, for example during the read or write operation. Furthermore, the value of the load resistance is often intentionally altered in order to transmit data to the reader (see Section 4.1.10.3).

Figure 4.35 shows the corresponding locus curve for $Z'_{\mathrm{T}} = f(R_{\mathrm{L}})$. This shows that the transformed transponder impedance is proportional to $R_{\mathrm{L}}$. Increasing load resistance $R_{\mathrm{L}}$, which corresponds with a lower(!) current in the data carrier, thus also leads to a greater value for the transformed transponder impedance $Z'_{\mathrm{T}}$. This can be explained by the influence of the load resistance $R_{\mathrm{L}}$ on the $Q$ factor: a high-ohmic load resistance $R_{\mathrm{L}}$ leads to a high $Q$ factor in the resonant circuit and thus to a greater current step-up in the transponder resonant circuit. Due to the proportionality $Z'_{\mathrm{T}} \sim j\omega M \cdot i_2$ – and not to $i_{\mathrm{RL}}$ – we obtain a correspondingly high value for the transformed transponder impedance.

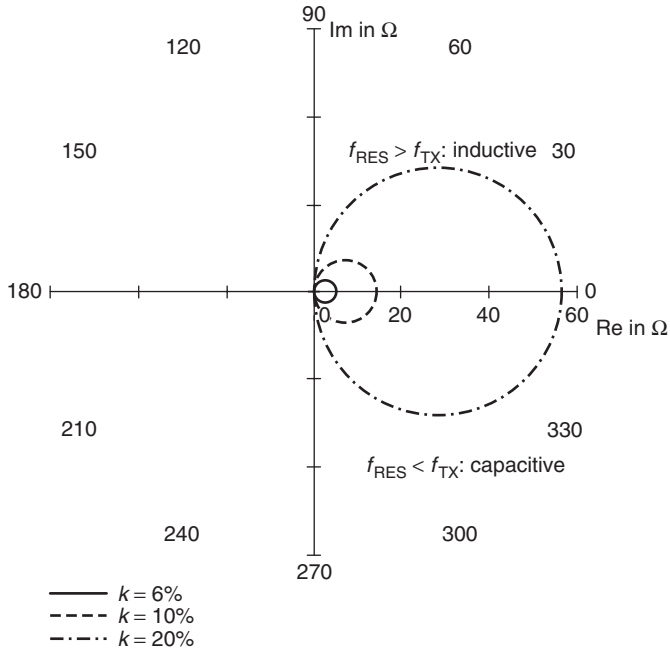


**Figure 4.33** The locus curve of $Z'_{\mathrm{T}}$ ($C_2 = 10$–$110\,\mathrm{pF}$) in the complex impedance plane as a function of the capacitance $C_2$ in the transponder is a circle in the complex $Z$ plane. The diameter of the circle is proportional to $k_2$

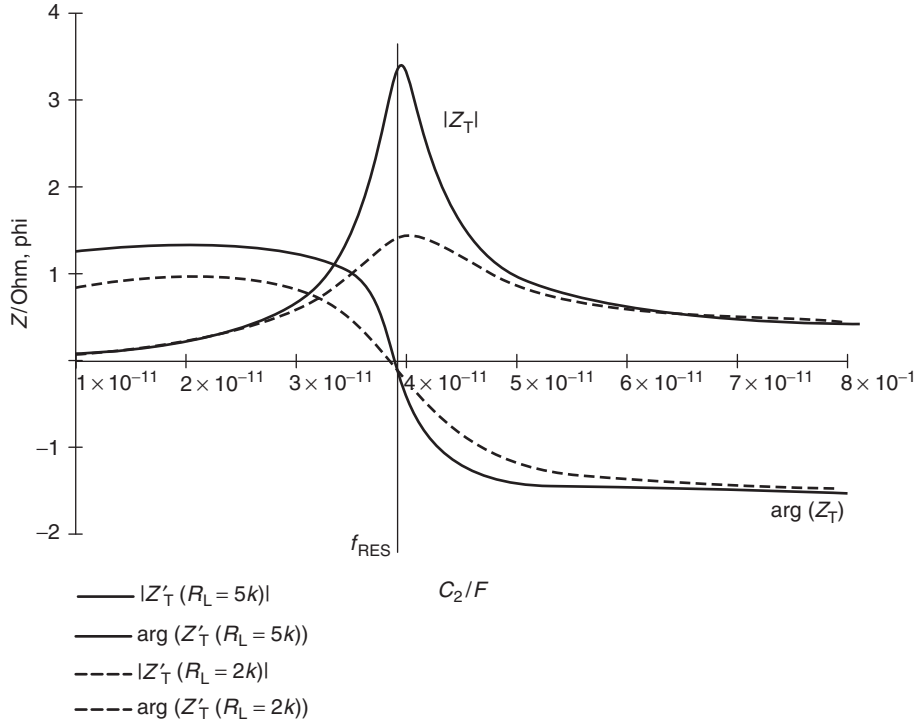


**Figure 4.34** Value and phase of the transformed transponder impedance $Z'_T$ as a function of $C_2$. The maximum value of $Z'_T$ is reached when the transponder resonant frequency matches the transmission frequency of the reader. The polarity of the phase angle of $Z'_T$ varies

If the transponder resonant frequency is detuned we obtain a curved locus curve for the transformed transponder impedance $Z'_T$. This can also be traced back to the influence of the $Q$ factor, because the phase angle of a detuned parallel resonant circuit also increases as the $Q$ factor increases ($R_L \uparrow$), as we can see from a glance at Figure 4.34.

Let us reconsider the two extreme values of $R_L$:

$$Z'_T(R_L \to 0) = \frac{\omega^2 k^2 \cdot L_1 \cdot L_2}{R_2 + j\omega L_2} \tag{4.53}$$

('short-circuited' transponder coil)

$$Z'_T(R_L \to \infty) = \frac{\omega^2 k^2 \cdot L_1 \cdot L_2}{j\omega L_2 + R_2 + \dfrac{1}{j\omega C_2}} \tag{4.54}$$

(unloaded transponder resonant circuit).

#### *4.1.10.2.5 Transponder Inductance $L_2$*

Let us now investigate the influence of inductance $L_2$ on the transformed transponder impedance, whereby the resonant frequency of the transponder is again held constant, so that $C_2 = 1/\omega_{TX}^2 L_2$.

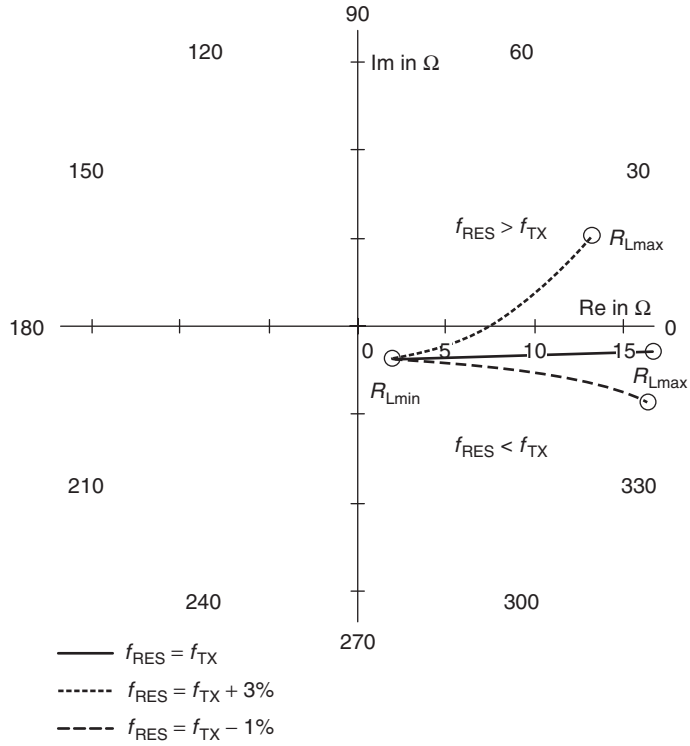


**Figure 4.35** Locus curve of $Z'_T$ ($R_L = 0.3–3$ kΩ) in the impedance plane as a function of the load resistance $R_L$ in the transponder at different transponder resonant frequencies

Transformed transponder impedance reaches a clear peak at a given inductance value, as a glance at the line diagram shows (Figure 4.36).

This behaviour is reminiscent of the graph of voltage $u_2 = f(L_2)$ (see also Figure 4.15). Here too the peak transformed transponder impedance occurs where the $Q$ factor, and thus the current $i_2$ in the transponder, is at a maximum ($Z'_T \sim j\omega M \cdot i_2$). Section 4.1.7, gives an explanation of the mathematical relationship between load resistance and the $Q$ factor.

#### 4.1.10.3 Load Modulation

Apart from a few other methods (see Chapter 3), so-called *load modulation* is the most common procedure for *data transmission* from transponder to reader by some margin. By varying the circuit parameters of the *transponder resonant circuit* in time with the data stream, the magnitude and phase of the *transformed transponder impedance* can be influenced (modulation) such that the data from the transponder can be reconstructed by an appropriate evaluation procedure in the reader (demodulation).

However, of all the circuit parameters in the transponder resonant circuit, only two can be altered by the data carrier: the load resistance $R_L$ and the parallel capacitance $C_2$. Therefore RFID literature distinguishes between ohmic (or real) and capacitive load modulation.

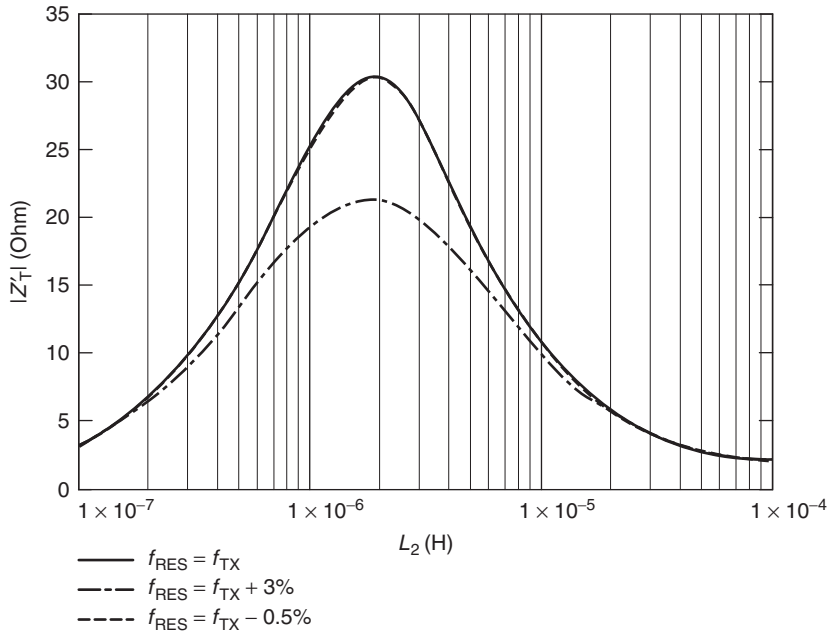


**Figure 4.36** The value of $Z'_T$ as a function of the transponder inductance $L_2$ at a constant resonant frequency $f_{RES}$ of the transponder. The maximum value of $Z'_T$ coincides with the maximum value of the $Q$ factor in the transponder

#### *4.1.10.3.1 Ohmic Load Modulation*

In this type of load modulation a parallel resistor $R_{mod}$ is switched on and off within the data carrier of the transponder in time with the data stream (or in time with a modulated subcarrier) (Figure 4.37). We already know from the previous section that the parallel connection of $R_{mod}$ ($\rightarrow$ reduced total resistance) will reduce the $Q$ factor and thus also the transformed transponder impedance $Z'_T$. This is also evident from the locus curve for the ohmic load modulator: $Z'_T$ is switched between the values $Z'_T$ ($R_L$) and $Z'_T$ ($R_L||R_{mod}$) by the load modulator in the transponder (Figure 4.38). The phase of $Z'_T$ remains almost constant during this process (assuming $f_{TX} = f_{RES}$).

In order to be able to reconstruct (i.e. demodulate) the transmitted data, the falling voltage $u_{ZT}$ at $Z'_T$ must be sent to the receiver (RX) of the reader. Unfortunately, $Z'_T$ is not accessible in the reader as a discrete component because the voltage $u_{ZT}$ is induced in the real antenna coil $L_1$. However,

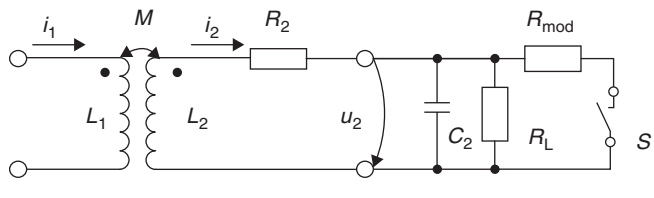


**Figure 4.37** Equivalent circuit diagram for a transponder with load modulator. Switch $S$ is closed in time with the data stream – or a modulated subcarrier signal – for the transmission of data

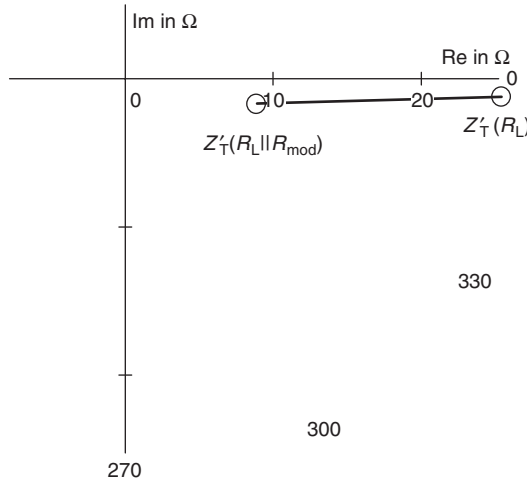


**Figure 4.38** Locus curve of the transformed transponder impedance with ohmic load modulation ($R_L||R_{mod} =$ 1.5–5 kΩ) of an inductively coupled transponder. The parallel connection of the *modulation resistor* $R_{mod}$ results in a lower value of $Z'_T$

the voltages $u_{L1}$ and $u_{R1}$ also occur at the antenna coil $L_1$, and they can only be measured at the terminals of the antenna coil as the total voltage $u_{RX}$. This total voltage is available to the receiver branch of the reader (see also Figure 4.25).

The vector diagram in Figure 4.39 shows the magnitude and phase of the voltage components $u_{ZT}$, $u_{L1}$ and $u_{R1}$ which make up the total voltage $u_{RX}$. The magnitude and phase of $u_{RX}$ is varied by

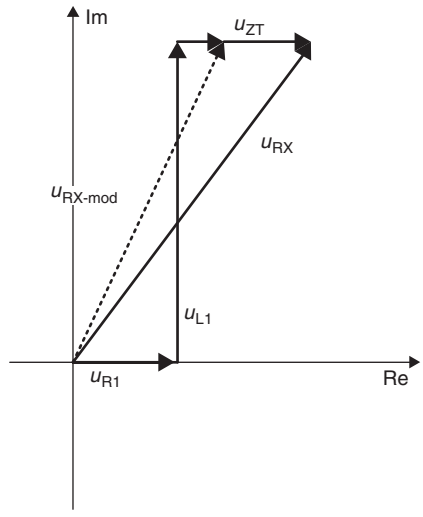


**Figure 4.39** Vector diagram for the total voltage $u_{RX}$ that is available to the receiver of a reader. The magnitude and phase of $u_{RX}$ are modulated at the antenna coil of the reader ($L_1$) by an ohmic load modulator

the modulation of the voltage component $u_{ZT}$ by the load modulator in the transponder. *Load modulation* in the transponder thus brings about the *amplitude modulation* of the reader antenna voltage $u_{RX}$. The transmitted data is therefore not available in the baseband at $L_1$; instead it is found in the modulation products (= modulation sidebands) of the (load) modulated voltage $u_1$ (see Chapter 6).

#### *4.1.10.3.2 Capacitive Load Modulation*

In *capacitive load modulation* it is an additional capacitor $C_{mod}$, rather than a modulation resistance, that is switched on and off in time with the data stream (or in time with a modulated subcarrier) (Figure 4.40). This causes the resonant frequency of the transponder to be switched between two frequencies. We know from the previous section that the detuning of the transponder resonant frequency markedly influences the magnitude and phase of the transformed transponder impedance $Z'_T$. This is also clearly visible from the locus curve for the capacitive load modulator (Figure 4.41): $Z'_T$ is switched between the values $Z'_T$ ($\omega_{RES1}$) and $Z'_T$ ($\omega_{RES2}$) by the load modulator in the transponder. The locus curve for $Z'_T$ thereby passes through a segment of the circle in the complex $Z$ plane that is typical of the parallel resonant circuit.

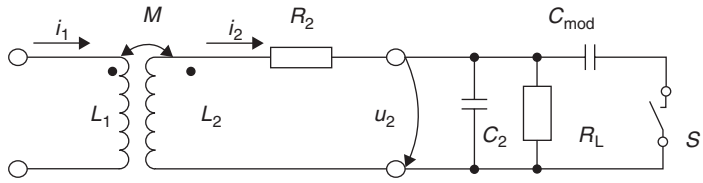


**Figure 4.40** Equivalent circuit diagram for a transponder with capacitive load modulator. To transmit data the switch $S$ is closed in time with the data stream – or a modulated subcarrier signal

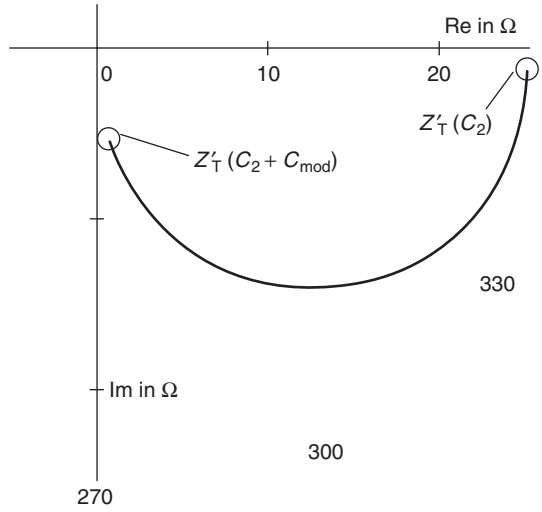


**Figure 4.41** Locus curve of transformed transponder impedance for the capacitive load modulation ($C_2||C_{mod} = 40–60$ pF) of an inductively coupled transponder. The parallel connection of a *modulation capacitor* $C_{mod}$ results in a modulation of the magnitude and phase of the transformed transponder impedance $Z'_T$

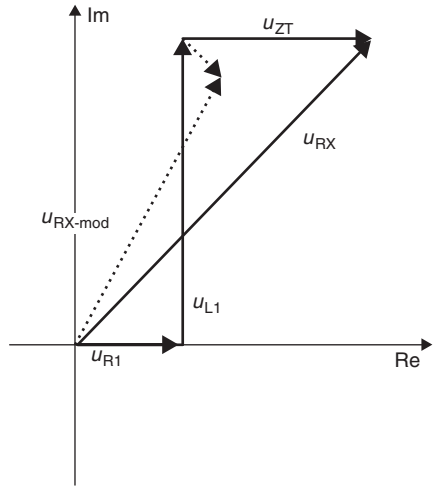


**Figure 4.42** Vector diagram of the total voltage $u_{RX}$ available to the receiver of the reader. The magnitude and phase of this voltage are modulated at the antenna coil of the reader ($L_1$) by a capacitive load modulator

Demodulation of the data signal is similar to the procedure used with ohmic load modulation. Capacitive *load modulation* generates a combination of *amplitude and phase modulation* of the reader antenna voltage $u_{RX}$ and should therefore be processed in an appropriate manner in the receiver branch of the reader. The relevant vector diagram is shown in Figure 4.42.

#### *4.1.10.3.3 Demodulation in the Reader*

For transponders in the frequency range <135 kHz the load modulator is generally controlled directly by a serial data stream encoded in the baseband, e.g. a Manchester encoded bit sequence. The modulation signal from the transponder can be recreated by the rectification of the amplitude-modulated voltage at the antenna coil of the reader (see Section 11.3).

In higher-frequency systems operating at 6.78 or 13.56 MHz, on the other hand, the transponder's load modulator is controlled by a modulated subcarrier signal (see Section 6.2.4). The subcarrier frequency $f_H$ is normally 847 kHz (ISO 14443-2), 423 kHz (ISO 15693) or 212 kHz.

Load modulation with a subcarrier generates two sidebands at a distance of $\pm f_H$ to either side of the transmission frequency (see Section 6.2.4). The information to be transmitted is held in the two sidebands, with each sideband containing the same information. One of the two sidebands is filtered in the reader and finally demodulated to reclaim the baseband signal of the modulated data stream.

#### *4.1.10.3.4 The Influence of the Q Factor*

As we know from the preceding section, we attempt to maximise the *Q factor* in order to maximise the energy range and the retroactive transformed transponder impedance. From the point of view of the energy range, a high $Q$ factor in the transponder resonant circuit is definitely desirable. If we want to transmit data from or to the transponder a certain minimum bandwidth of the transmission path from the data carrier in the transponder to the receiver in the reader will be required. However, the bandwidth $B$ of the *transponder resonant circuit* is inversely proportional to the $Q$ factor.

$$B = \frac{f_{RES}}{Q} \tag{4.55}$$

Each load modulation operation in the transponder causes a corresponding amplitude modulation of the current $i_2$ in the transponder coil. The modulation sidebands of the current $i_2$ that this generates are damped to some degree by the bandwidth of the transponder resonant circuit, which is limited in practice. The bandwidth $B$ determines a frequency range around the resonant frequency $f_{RES}$, at the limits of which the modulation sidebands of the current $i_2$ in the transponder reach a damping of 3 dB relative to the resonant frequency (Figure 4.43). If the $Q$ factor of the transponder is too high, then the modulation sidebands of the current $i_2$ are damped to such a degree due to the low bandwidth that the range is reduced (transponder signal range).

Transponders used in 13.56 MHz systems that support an *anticollision algorithm* are adjusted to a resonant frequency of 15–18 MHz to minimise the mutual influence of several transponders. Due to the marked detuning of the transponder resonant frequency relative to the transmission frequency of the reader the two modulation sidebands of a load modulation system with subcarrier are transmitted at a different level (Figure 4.44).

The term bandwidth is problematic here (the frequencies of the reader and the modulation sidebands may even lie outside the bandwidth of the transponder resonant circuit). However, the selection of the correct $Q$ factor for the transponder resonant circuit is still important, because the $Q$ factor can influence the transient effects during load modulation.

Ideally, the 'mean $Q$ factor' of the transponder will be selected such that the energy range and transponder signal range of the system are identical. However, the calculation of an ideal $Q$ factor is nontrivial and should not be underestimated because the $Q$ factor is also strongly influenced by the *shunt regulator* (in connection with the distance $d$ between transponder and reader antenna) and by the *load modulator* itself. Furthermore, the influence of the bandwidth of the transmitter antenna (series resonant circuit) on the level of the load modulation sidebands should not be underestimated.

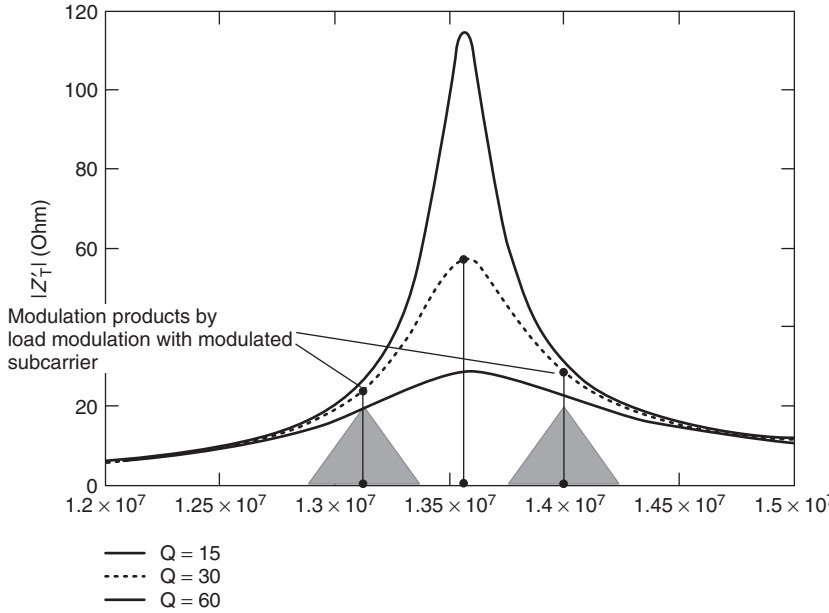


**Figure 4.43** The transformed transponder impedance reaches a peak at the resonant frequency of the transponder. The amplitude of the modulation sidebands of the current $i_2$ is damped due to the influence of the bandwidth $B$ of the transponder resonant circuit (where $f_H = 440$ kHz, $Q = 30$)

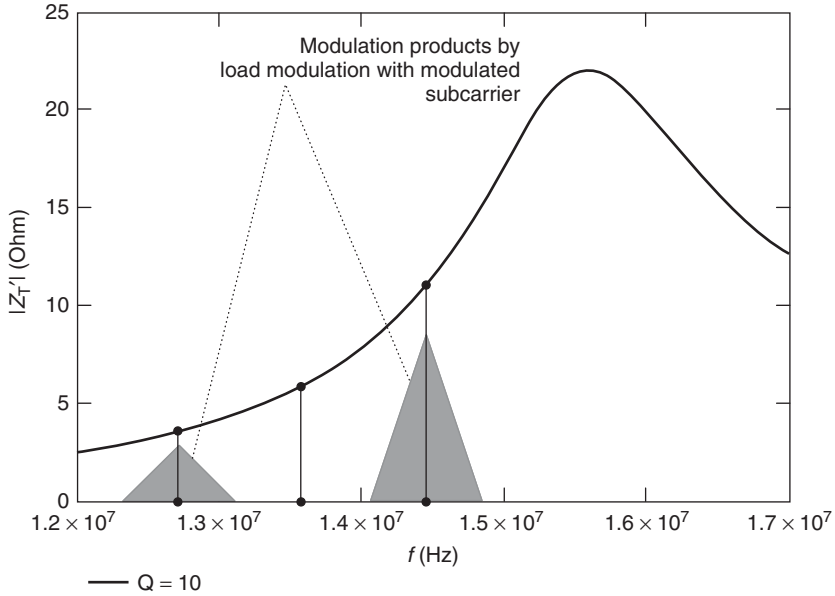


**Figure 4.44** If the transponder resonant frequency is markedly detuned compared with the transmission frequency of the reader the two modulation sidebands will be transmitted at different levels. (Example based upon subcarrier frequency $f_H = 847$ kHz)

Therefore, the development of an inductively coupled RFID system is always a compromise between the system's range and its data transmission speed (baud rate/subcarrier frequency). Systems that require a short transaction time (that is, rapid data transmission and large bandwidth) often only have a range of a few centimetres, whereas systems with relatively long transaction times (that is, slow data transmission and low bandwidth) can be designed to achieve a greater range. A good example of the former case is provided by contactless smart cards for local public transport applications, which carry out authentication with the reader within a few 100 ms and must also transmit booking data. Contactless smart cards for 'hands free' access systems that transmit just a few bytes – usually the serial number of the data carrier – within 1–2 seconds are an example of the latter case. A further consideration is that in systems with a 'large' transmission antenna the data rate of the reader is restricted by the fact that only small sidebands may be generated because of the need to comply with the radio licensing regulations (ETS, FCC). Table 4.4 gives a brief overview of the relationship between range and bandwidth in inductively coupled RFID systems.

## *4.1.11 Measurement of System Parameters*

### 4.1.11.1 Measuring the Coupling Coefficient k

The coupling coefficient $k$ and the associated mutual inductance $M$ are the most important parameters for the design of an inductively coupled RFID system. It is precisely these parameters that are most difficult to determine analytically as a result of the – often complicated – field pattern. Mathematics may be fun, but has its limits. Furthermore, the software necessary to calculate a numeric simulation is often unavailable – or it may simply be that the time or patience is lacking.

**Table 4.4** Typical relationship between range and bandwidth in 13.56 MHz systems. An increasing $Q$ factor in the transponder permits a greater range in the transponder system. However, this is at the expense of the bandwidth and thus also the data transmission speed (baud rate) between transponder and reader

| System | Baud rate (kBd) | $f_{\text{Subcarrier}}$ (kHz) | $f_{\text{TX}}$ | Range |
|---|---|---|---|---|
| ISO 14443 | 106 | 847 | 13.56 MHz | 0–10 cm |
| ISO 15693 short | 26.48 | 484 | 13.56 MHz | 0–30 cm |
| ISO 15693 long | 6.62 | 484 | 13.56 MHz | 0–70 cm |
| Long-range system | 9.0 | 212 | 13.56 MHz | 0–1 m |
| LF system | −0−10 | No subcarrier | <125 kHz | 0–1.5 m |

However, the coupling coefficient $k$ for an existing system can be quickly determined by means of a simple measurement. This requires a test transponder coil with electrical and mechanical parameters that correspond with those of the 'real' transponder. The coupling coefficient can be simply calculated from the measured voltages $U_R$ at the reader coil and $U_T$ at the transponder coil (in Figure 4.45 these are denoted as $V_R$ and $V_T$):

$$k = A_k \cdot \frac{U_T}{U_R} \cdot \sqrt{\frac{L_R}{L_T}} \tag{4.56}$$

where $U_T$ is the voltage at the transponder coil, $U_R$ is the voltage at the reader coil, $L_T$ and $L_R$ are the inductance of the coils and $A_K$ is the correction factor (<1).

The parallel, parasitic capacitances of the measuring circuit and the test transponder coil itself influence the result of the measurement because of the undesired current $i_2$. To compensate for this

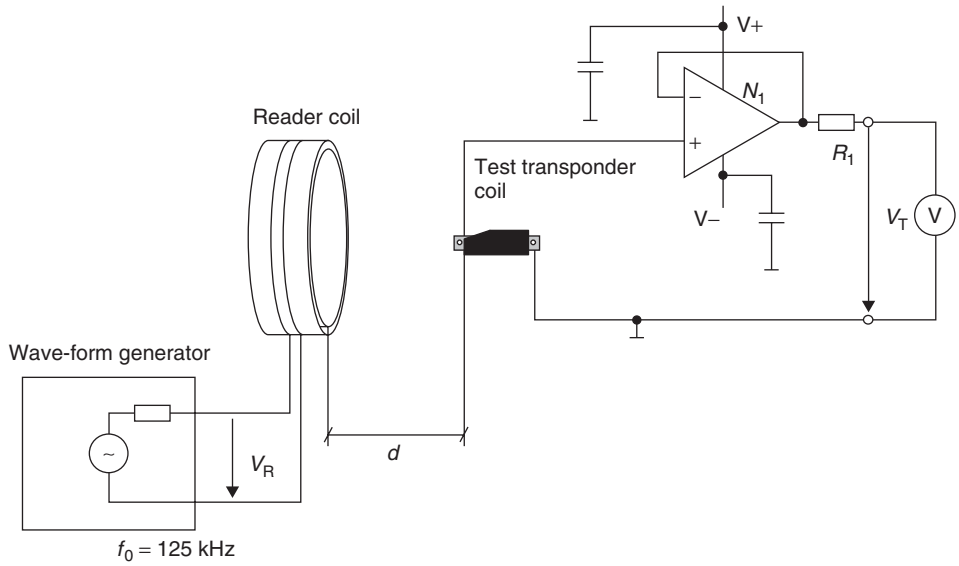


**Figure 4.45** Measurement circuit for the measurement of the magnetic coupling coefficient $k$. N1: TL081 or LF 356N, R1: 100–500 Ω (reproduced by permission of TEMIC Semiconductor GmbH, Heilbronn)

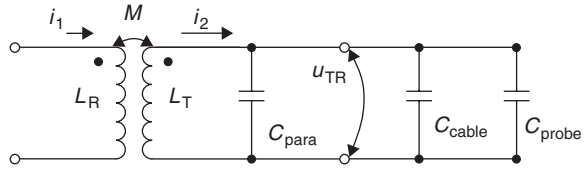


**Figure 4.46** Equivalent circuit diagram of the test transponder coil with the parasitic capacitances of the measuring circuit

effect, Equation (4.56) includes a correction factor $A_K$. Where $C_{TOT} = C_{para} + C_{cable} + C_{probe}$ (see Figure 4.46) the correction factor is defined as:

$$A_k = 2 - \frac{1}{1 - (\omega^2 \cdot C_{TOT} \cdot L_T)} \tag{4.57}$$

In practice, the correction factor in the low capacitance layout of the measuring circuit is $A_K \sim$ 0.99–0.8 (TEMIC, 1977).

#### 4.1.11.2 Measuring the Transponder Resonant Frequency and the Q Factor

The precise measurement of the transponder *resonant frequency* so that deviations from the desired value can be detected is particularly important in the manufacture of inductively coupled transponders. However, since transponders are usually packed in a glass or plastic housing, which renders them inaccessible, the measurement of the resonant frequency can only be realised by means of an inductive coupling.

The measurement circuit for this is shown in Figure 4.47. A coupling coil (conductor loop with several windings) is used to achieve the inductive coupling between transponder and measuring device. The self-resonant frequency of this coupling coil should be significantly higher (by a factor of at least 2) than the self-resonant frequency of the transponder in order to minimise measuring errors.

A *phase and impedance analyser* (or a *network analyser*) is now used to measure the impedance $Z_1$ of the coupling coil as a function of frequency. If $Z_1$ is represented in the form of a line diagram it has a curved path, as shown in Figure 4.48. As the measuring frequency rises the line diagram passes through various local maxima and minima for the magnitude and phase of $Z_1$. The sequence of the individual maxima and minima is always the same.

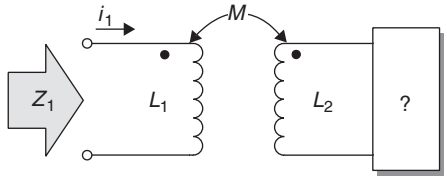


**Figure 4.47** The circuit for the measurement of the *transponder resonant frequency* consists of a coupling coil $L_1$ and a measuring device that can precisely measure the complex impedance of $Z_1$ over a certain frequency range

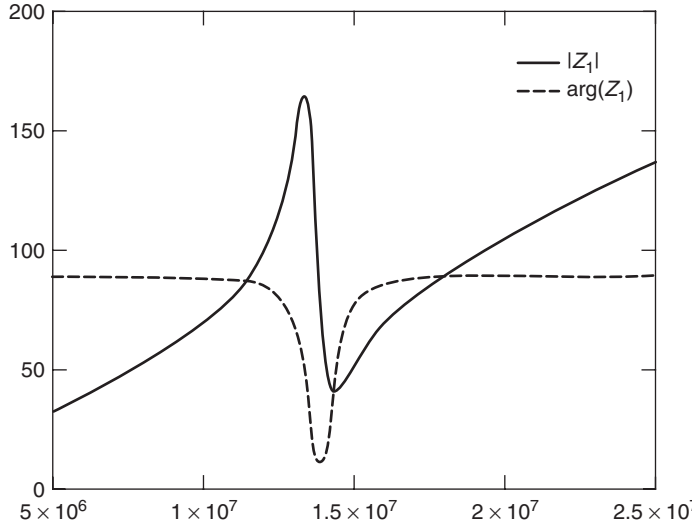


**Figure 4.48** The measurement of absolute value and phase at the measuring coil permits no conclusion to be drawn regarding the resonance frequency of the transponder

In the event of mutual inductance with a transponder the impedance $Z_1$ of the coupling coil $L_1$ is made up of several individual impedances:

$$Z_1 = R_1 + j\omega L_1 + Z'_{\mathrm{T}} \tag{4.58}$$

Figure 4.49 shows the locus curve of impedance $Z_1$ measured over a larger frequency range. The locus curve starts with frequency 0 at origin $Z_1(\mathrm{f}) = 0$. With increasing measuring frequency, the locus curve initially follows a line parallel to the $y$ axis. For low measuring frequencies, the effect of the *transponder oscillating circuit* can still be neglected, so $Z_1 = R_{\mathrm{L}} + j\omega L_1$.

If the measuring frequency further increases the locus curve becomes a circle to be followed clockwise, which is due to the effect of $Z'_{\mathrm{T}}$ in the range of the resonant frequency, i.e. $|Z'_{\mathrm{T}}| > 0$. There a several distinctive points on the circle. These points can also be recognized easily on the line diagram for $|Z_1|$ (see Figure 4.48).

At first, there is a point with a maximum value $Z_1$ which can be recognized as a local maximum also in the line diagram. The next distinctive point on the locus curve is the minimum value of phase angle $\varphi$, which can also be clearly recognized in the line diagram (minimum on the dotted line). The phase minimum is followed by a local minimum of value $Z_1$ after which the locus curve, with increasing measuring frequency, finally ends in a vertical line again. The local minimum $Z_1$ is also clearly visible in the line diagram of $Z_1$.

The point we are interested in, i.e. the transponder's resonant frequency, corresponds to the maximum value of the real component of $Z_1$. This point, however, is not visible in the line diagram of $|Z_1|$. In order to determine the resonant frequency of a transponder, we have to measure real component $R$ of $|Z_1|$ with the resonant frequency corresponding to the maximum of $R$. An alternative approach would be to measure the value of the transformed transponder impedance by eliminating the influence of the measuring coil ($R_1$, $L_1$) through compensation measurement (short correction; the centre of the circle that the locus curve describes in Figure 4.49 is then situated on the diagram's re-axis). For this kind of measurement, the maximum value of the transponder impedance corresponds to the resonant frequency.

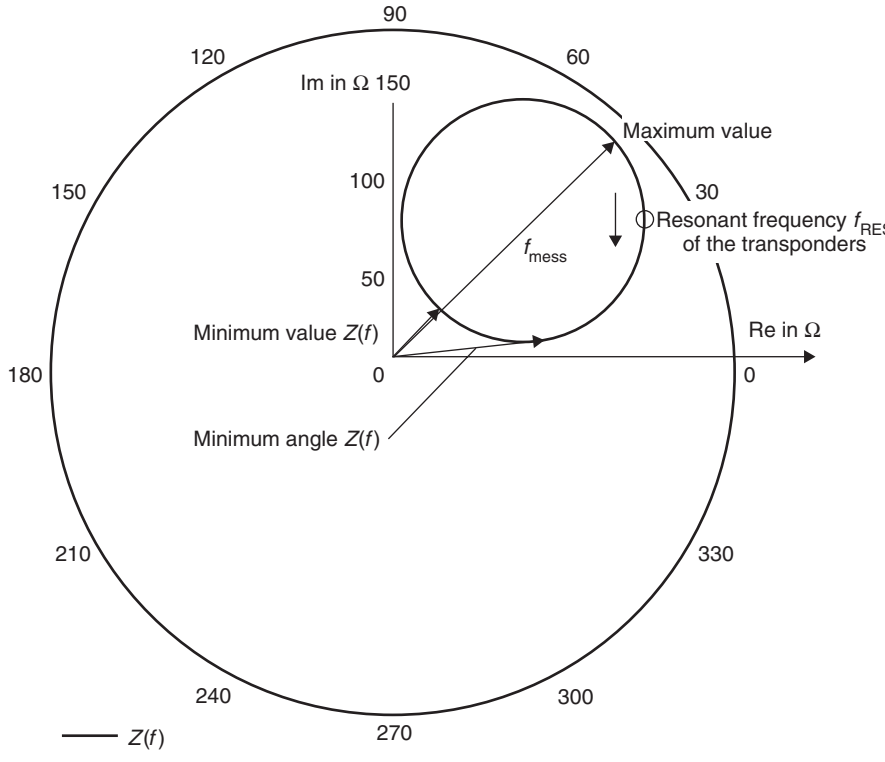


**Figure 4.49** The locus curve of impedance $Z_1$ in the frequency range 1–30 MHz

Figure 4.50 shows a measurement set-up for measuring the resonant frequency of a contactless smart card. Measuring coil $L_1$ and the measuring object, i.e. the contactless smart card on a spacer, are clearly visible on the right hand side of the figure. Figure 4.51 presents a screenshot of the measurement. Correction measurement was used for prior compensation of the measuring coil's impedance ($L_1$, $R_1$). For the given impedance value, the transponder resonant frequency can be read off as the measuring curve's maximum at 14.9325 MHz (marker 1).

With this measuring method, it is – under specific circumstances – possible to *measure the Q factor* of the transponder oscillating circuit. The $Q$ factor measures the voltage and current overshoot in the oscillating circuit at resonant frequency. *Bandwidth B* of an oscillating circuit is inversely proportional to the $Q$ factor and states a frequency range around the transponder's resonant frequency. At the limits of this range, coupled-in voltage $u_2$ has decreased by 3 dB (factor 0.707) in comparison to resonant frequency. The same applies to current $i_2$ in coil $L_2$ of the transponder oscillating circuit as it is proportional to voltage $u_2$. As even the measured transponder impedance $Z'_T$ is proportional to voltage $u_2$ or current $i_2$, respectively, we can determine the 3 dB bandwidth for $Z'_T$ und use formula 4.55 to determine the $Q$ factor of the transponder oscillating circuit. Bandwidth $B$ then is defined as the frequency range around the transponder resonant frequency at the limits of which the value of $Z'_T$ has decreased by 3 dB (factor 0.707) in comparison to the value measured at resonant frequency.

Figure 4.51 presents an example of a measurement of a transponder's $Q$ factor where the $Q$ factor is automatically calculated by the measuring device. The 3 dB bandwidth (BW) is defined

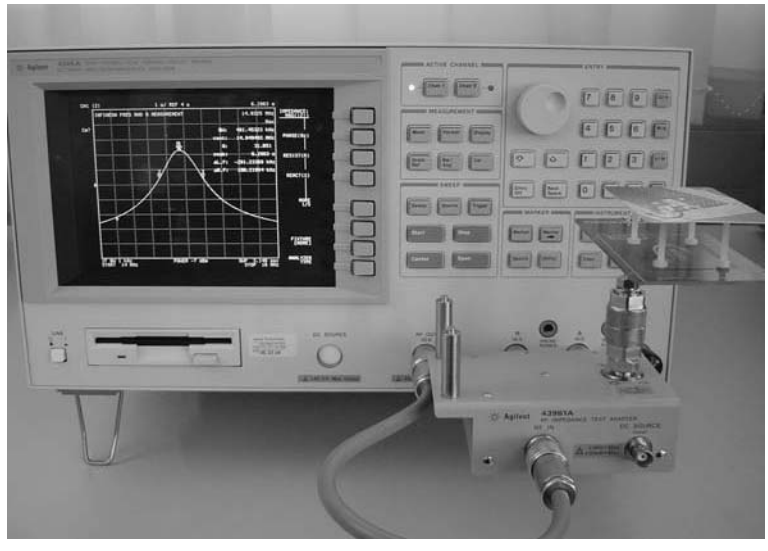

**Figure 4.50** Example of a measurement set-up for measuring a transponder's resonant frequency and $Q$ factor. To the right, you see measuring coil $L_1$. Above, there is a contactless smart card as the measuring object. Four plastic pins retain it at a predefined distance (reproduced by permission of Infineon Technologies Austria AG)

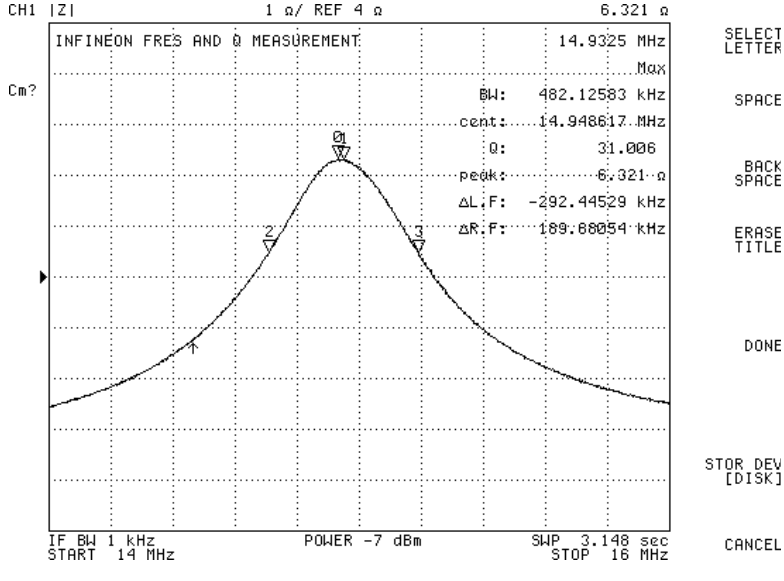


**Figure 4.51** Screenshot of the measurement of a transponder's resonant frequency and $Q$ factor (reproduced by permission of Infineon Technologies Austria AG)

by the distance of the two markers 2 and 3 and, in this example, it is about 482 kHz. Prior to this measurement, we have to compensate for the impedance contributed by the measuring coil ($R_1$, $L_1$) in order to eliminate it from the measurement as it would falsify the result (i.e. without measuring object, the measured value of the impedance should be zero over the entire given frequency range).

Another possible source of error when measuring the $Q$ factor is to set the field strength at a too high value (i.e. the measuring current in coil $L_1$ is too high). This may trigger the shunt regulator or activate the transponder chip which changes the $Q$ factor during the ongoing measurement. Usually this effect is clearly visible, though, through a distinctive asymmetry or an 'unsteady' measuring curve.

## *4.1.12 Magnetic Materials*

Materials with a relative *permeability* $> 1$ are termed ferromagnetic materials. These materials are iron, cobalt, nickel, various alloys and ferrite.

### 4.1.12.1 Properties of Magnetic Materials and Ferrite

One important characteristic of a magnetic material is the *magnetisation characteristic* or *hysteresis curve*. This describes $B = f(\mathrm{H})$, which displays a typical path for all ferromagnetic materials.

Starting from the unmagnetized state of the ferromagnetic material, the virgin curve $A \rightarrow B$ is obtained as the magnetic field strength $H$ increases. During this process, the molecular magnets in the material align themselves in the $B$ direction. (Ferromagnetism is based upon the presence of molecular magnetic dipoles. In these, the electron circling the atomic core represents a current and generates a magnetic field. In addition to the movement of the electron along its path, the rotation of the electron around itself, the spin, also generates a magnetic moment, which is of even greater importance for the material's magnetic behaviour.) Because there is a finite number of these molecular magnets, the number that remain to be aligned falls as the magnetic field increases, thus the gradient of the hysteresis curve falls. When all molecular magnets have been aligned, $B$ rises in proportion to $H$ only to the same degree as in a vacuum.

When the field strength $H$ falls to $H = 0$, the flux density $B$ falls to the positive residual value $B_{\mathrm{R}}$, the remanence. Only after the application of an opposing field $(-H)$ does the flux density $B$ fall further and finally return to zero. The field strength necessary for this is termed the coercive field strength $H_{\mathrm{C}}$.

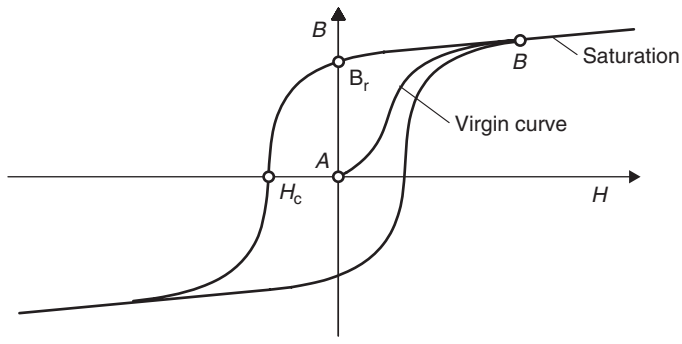


**Figure 4.52** Typical magnetisation or hysteresis curve for a ferromagnetic material

Ferrite is the main material used in high-frequency technology. This is used in the form of soft magnetic ceramic materials (low $B_r$), composed mainly of mixed crystals or compounds of iron oxide ($Fe_2O_3$) with one or more oxides of bivalent metals (NiO, ZnO, MnO etc.) (Vogt. Elektronik, 1990). The manufacturing process is similar to that for ceramic technologies (sintering).

The main characteristic of ferrite is its high specific electrical resistance, which varies between 1 and $10^6\,\Omega\,\mathrm{m}$ depending upon the material type, compared to the range for metals, which vary between $10^{-5}$ and $10^{-4}\,\Omega\,\mathrm{m}$. Because of this, eddy current losses are low and can be disregarded over a wide frequency range. The relative permeability of ferrites can reach the order of magnitude of $\mu_r = 2000$.

An important characteristic of ferrite materials is their material-dependent limit frequency, which is listed in the datasheets provided by the ferrite manufacturer. Above the limit frequency increased losses occur in the ferrite material, and therefore ferrite should not be used outside the specified frequency range.

#### 4.1.12.2 Ferrite Antennas in LFM Transponders

Some applications require extremely small transponder coils (Figure 4.53). In transponders for animal identification, typical dimensions for cylinder coils are $d \times l = 5 \times 0.75$ mm. The mutual inductance that is decisive for the power supply of the transponder falls sharply due to its proportionality with the cross-sectional area of the coil ($M \sim A$; Equation 4.13). By inserting a ferrite material with a high permeability $\mu$ into the coil ($M \sim \Psi \rightarrow M \sim \mu \cdot H \cdot A$; Equation 4.13), the mutual inductance can be significantly increased, thus compensating for the small cross-sectional area of the coil.

The inductance of a *ferrite antenna* can be calculated according to the following equation (Philips Components, 1994):

$$L = \frac{\mu_0 \mu_{\mathrm{Ferrite}} \cdot n^2 \cdot A}{l} \tag{4.59}$$

#### 4.1.12.3 Ferrite Shielding in a Metallic Environment

The use of (inductively coupled) RFID systems often requires that the reader or transponder antenna be mounted directly upon a metallic surface. This might be the reader antenna of an automatic ticket dispenser or a transponder for mounting on gas bottles).

However, it is not possible to fit a magnetic antenna directly onto a metallic surface. The magnetic flux through the metal surface induces eddy currents within the metal, which oppose the field responsible for their creation, i.e. the reader's field (Lenz's law), thus damping the magnetic field in the surface of the metal to such a degree that communication between reader and transponder is no longer possible. It makes no difference here whether the magnetic field is generated by the

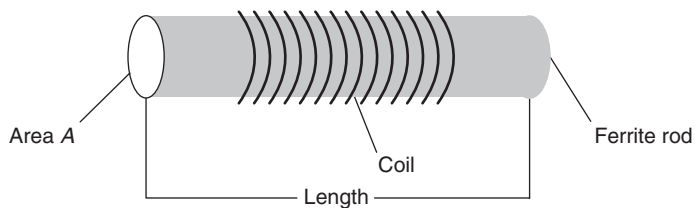


**Figure 4.53** Configuration of a ferrite antenna in a 135 kHz glass transponder

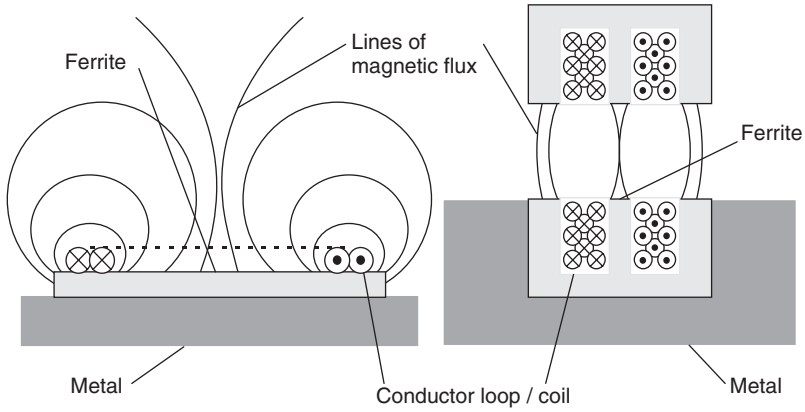


**Figure 4.54** Reader antenna (left) and gas bottle transponder in a U-shaped core with read head (right) can be mounted directly upon or within metal surfaces using ferrite shielding

coil mounted upon the metal surface (reader antenna) or the field approaches the metal surface from 'outside' (transponder on metal surface).

By inserting highly permeable ferrite between the coil and metal surface it is possible to largely prevent the occurrence of eddy currents. This makes it possible to mount the antenna on metal surfaces.

When fitting antennas onto ferrite surfaces it is necessary to take into account the fact that the inductance of the conductor loop or coils may be significantly increased by the permeability of the ferrite material, and it may therefore be necessary to readjust the resonant frequency or even redimension the matching network (in readers) altogether (see Section 11.4).

#### 4.1.12.4 Fitting Transponders in Metal

Under certain circumstances it is possible to fit transponders directly into a metallic environment (Figure 4.55). *Glass transponders* are used for this because they contain a coil on a highly permeable *ferrite rod*. If such a transponder is inserted horizontally into a long groove on the metal surface somewhat larger than the transponder itself, then the transponder can be read without any problems. When the transponder is fitted horizontally the field lines through the transponder's ferrite rod run in parallel to the *metal surface* and therefore the eddy current losses remain low. The insertion of the transponder into a vertical bore would be unsuccessful in this situation, since the field lines through the transponder's ferrite rod in this arrangement would end at the top of the bore at right angles to the metal surface. The *eddy current losses* that occur in this case hinder the interrogation of a transponder.

It is even possible to cover such an arrangement with a *metal lid*. However, a narrow gap of dielectric material (e.g. paint, plastic, air) is required between the two metal surfaces in order to interrogate the transponder. The field lines running parallel to the metal surface enter the cavity through the *dielectric gap* (Figure 4.56), so that the transponder can be read. Fitting transponders in metal allows them to be used in particularly hostile environments. They can even be run over by vehicles weighing several tonnes without suffering any damage.

Disk tags and contactless smart cards can also be embedded between metal plates. In order to prevent the magnetic field lines from penetrating into the metal cover, metal foils made of a highly

**Figure 4.55** Right, fitting a glass transponder into a metal surface; left, the use of a thin dielectric gap allows the transponders to be read, even through a metal casing (Photo: HANEX HXID system with Sokymat glass transponder in metal, reproduced by permission of HANEX Co. Ltd, Japan)

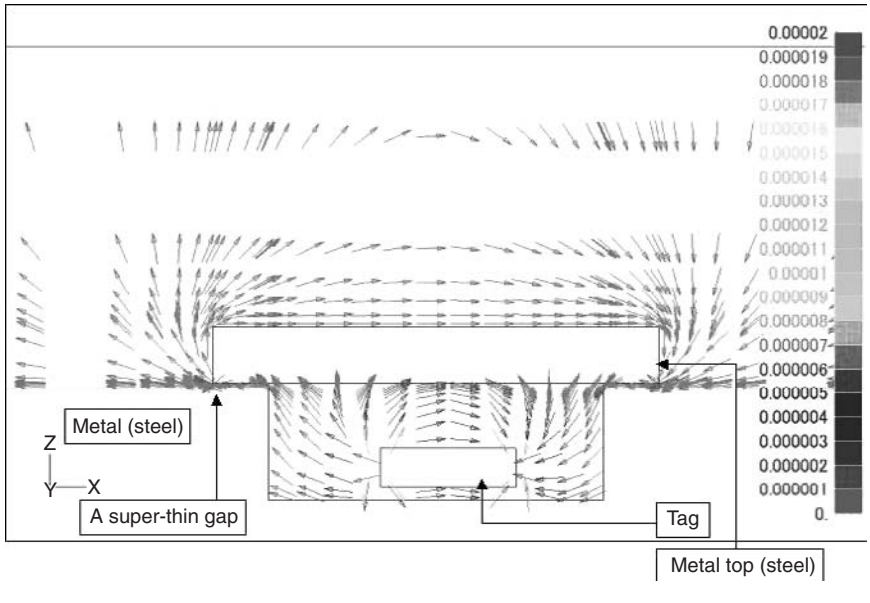


**Figure 4.56** Path of field lines around a transponder encapsulated in metal. As a result of the dielectric gap the field lines run in parallel to the metal surface, so that eddy current losses are kept low (reproduced by permission of HANEX Co. Ltd, Japan)

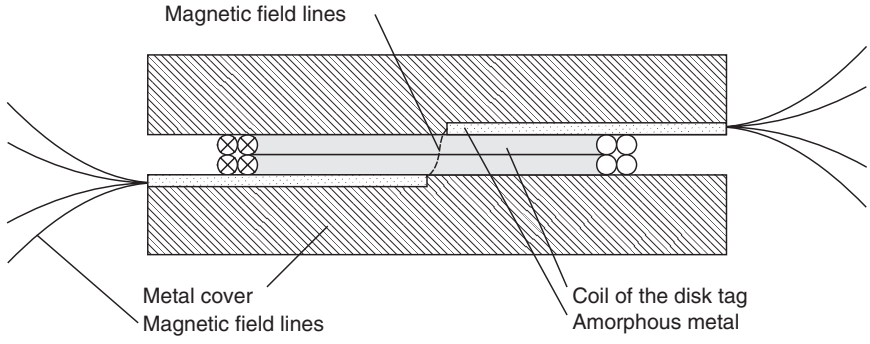


**Figure 4.57** Cross-section through a sandwich made of disc transponder and metal plates. Foils made of amorphous metal cause the magnetic field lines to be directed outwards

permeable *amorphous metal* are placed above and below the tag (Hanex, n.d.). It is of crucial importance for the functionality of the system that the amorphous foils each cover only one half of the tag.

The magnetic field lines enter the amorphous material in parallel to the surface of the metal plates and are carried through it as in a conductor. At the gap between the two foils a magnetic flux is generated through the transponder coil, so that this can be read.

## 4.2 Electromagnetic Waves

### *4.2.1 The Generation of Electromagnetic Waves*

Earlier in the book we described how a time varying *magnetic field* in space induces an *electric field* with closed field lines (rotational field; see also Figure 4.11). The electric field surrounds the magnetic field and itself varies over time. Due to the variation of the electric rotational field over time, a magnetic field with closed field lines occurs in space (rotational field). It surrounds the electric field and itself varies over time, thus generating another electric field. Due to the mutual dependence of the time-varying fields there is a chain effect of electric and magnetic fields in space (Fricke *et al*., 1979).

Radiation can only occur given a finite propagation speed ($c \approx 300\,000$ km/s; *speed of light*) for the electromagnetic field, which prevents a change in the voltage at the antenna from being followed immediately by the field in the vicinity of the change. Figure 4.58 shows the creation of an *electromagnetic wave* at a *dipole antenna*. Even at the alternating voltage's zero crossover (Figure 4.58c), the field lines remaining in space from the previous half-wave cannot end at the antenna, but close into themselves, forming eddies. The eddies in the opposite direction that occur in the next half-wave propel the existing eddies, and thus the energy stored in this field, away from the emitter at the speed of light $c$. The magnetic field is interlinked with the varying electrical field that propagates at the same time. When a certain distance is reached, the fields are released from the emitter, and this point represents the beginning of electromagnetic radiation ($\rightarrow$ far field). At high frequencies, that is small wavelengths, the radiation generated is particularly effective, because in this case the separation takes place in the direct vicinity of the emitter, where high field strengths still exist (Fricke *et al*., 1979).

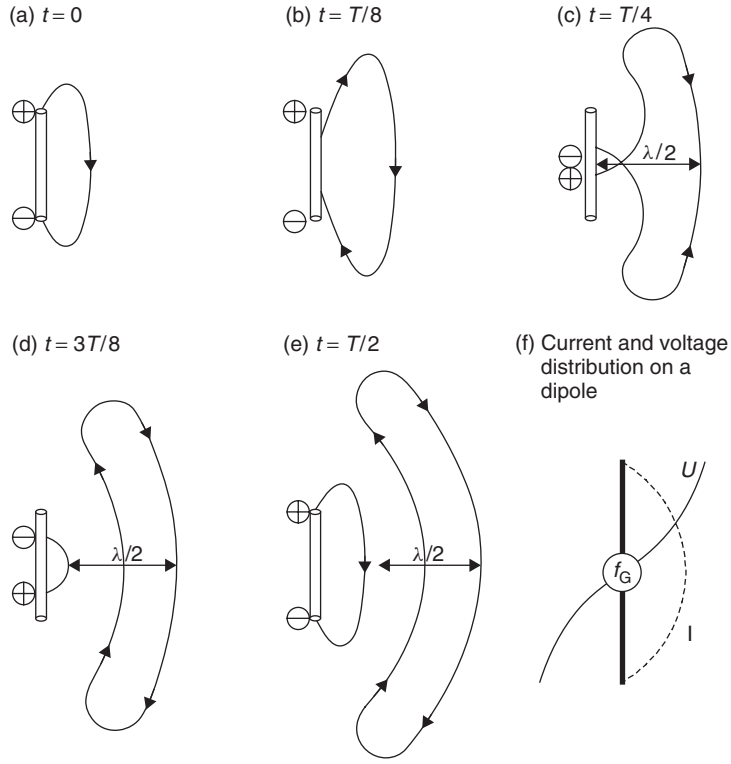


**Figure 4.58** The creation of an electromagnetic wave at a dipole antenna. The electric field $E$ is shown. The magnetic field $H$ forms as a ring around the antenna and thus lies at right angles to the electric field

The distance between two field eddies rotating in the same direction is called the *wavelength* $\lambda$ of the electromagnetic wave, and is calculated from the quotient of the speed of light $c$ and the frequency of the radiation:

$$\lambda = \frac{c}{f} \tag{4.60}$$

**Table 4.5** Frequency and wavelengths of different VHF–UHF frequencies

| Frequency | Wavelength (cm) |
|---|---|
| 433 MHz | 69 (70 cm band) |
| 868 MHz | 34 |
| 915 MHz | 33 |
| 2.45 GHz | 12 |
| 5.8 GHz | 5.2 |

#### 4.2.1.1 Transition from Near-Field to Far-Field in Conductor Loops

The primary magnetic field generated by a *conductor loop* begins at the antenna (see also Section 4.1.1.1). As the magnetic field propagates an electric field increasingly also develops by induction (compare Figure 4.11). The field, which was originally purely magnetic, is thus continuously transformed into an electromagnetic field. Moreover, at a distance of $\lambda/2\pi$ the electromagnetic field begins to separate from the antenna and wanders into space in the form of an electromagnetic wave. The area from the antenna to the point where the electromagnetic field forms is called the *near-field* of the antenna. The area after the point at which the electromagnetic wave has fully formed and separated from the antenna is called the *far-field*.

A separated electromagnetic wave can no longer retroact upon the antenna that generated it by inductive or capacitive coupling. For inductively coupled RFID systems this means that once the far-field has begun a *transformer (inductive) coupling* is no longer possible. The beginning of the far-field (the radius $r_F = \lambda/2\pi$ can be used as a rule of thumb) around the antenna thus represents an insurmountable *range limit* for inductively coupled systems.

The field strength path of a magnetic antenna along the coil $x$ axis follows the relationship $1/d^3$ in the near-field, as demonstrated above. This corresponds with a damping of 60 dB per decade (of distance). Upon the transition to the far field, on the other hand, the damping path flattens out, because after the separation of the field from the antenna only the *free space attenuation* of the electromagnetic waves is relevant to the field strength path. The field strength then decreases only according to the relationship $1/d$ as distance increases (see Equation 4.65). This corresponds with a damping of just 20 dB per decade (of distance).

## 4.2.2 Radiation Density S

An *electromagnetic wave* propagates into space spherically from the point of its creation. At the same time, the electromagnetic wave transports energy in the surrounding space. As the distance from the radiation source increases, this energy is divided over an increasing spherical surface area. In this connection we talk of the *radiation power* per unit area, also called *radiation density* $S$.

In a *spherical emitter*, the so-called *isotropic emitter*, the energy is radiated uniformly in all directions. At distance $r$ the radiation density $S$ can be calculated very easily as the quotient of the energy supplied by the emitter (thus the transmission power $P_{EIRP}$) and the surface area of the sphere.

$$S = \frac{P_{EIRP}}{4\pi r^2} \tag{4.61}$$

## 4.2.3 Characteristic Wave Impedance and Field Strength E

The energy transported by the electromagnetic wave is stored in the electric and magnetic field of the wave. There is therefore a fixed relationship between the radiation density $S$ and the field strengths $E$ and $H$ of the interconnected electric and magnetic fields. The electric field with electric

**Table 4.6** $r_F$ and $\lambda$ for different frequency ranges

| Frequency | Wavelength $\lambda$ (m) | $\lambda/2\pi$ (m) |
|---|---|---|
| <135 kHz | >2222 | >353 |
| 6.78 MHz | 44.7 | 7.1 |
| 13.56 MHz | 22.1 | 3.5 |
| 27.125 MHz | 11.0 | 1.7 |

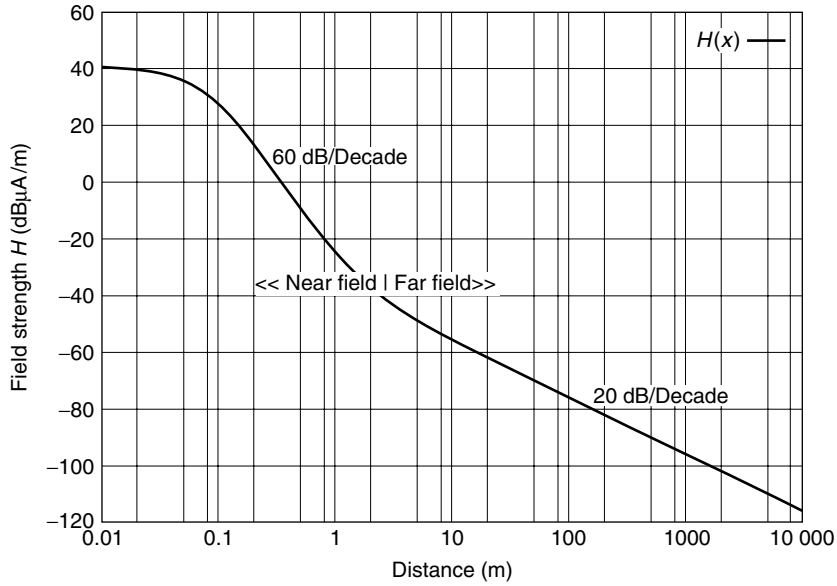


**Figure 4.59** Graph of the magnetic field strength $H$ in the transition from near to far field at a frequency of 13.56 MHz

field strength $E$ is at right angles to the magnetic field $H$. The area between the vectors $E$ and $H$ forms the wavefront and is at right angles to the direction of propagation. The radiation density $S$ is found from the Poynting radiation vector $S$ as a vector product of $E$ and $H$.

$$S = E \times H \tag{4.62}$$

The relationship between the field strengths $E$ and $H$ is defined by the permittivity and the dielectric constant of the propagation medium of the electromagnetic wave. In a vacuum and also in air as an approximation:

$$E = H \cdot \sqrt{\mu_0 \varepsilon_0} = H \cdot Z_F \tag{4.63}$$

$Z_F$ is termed the *characteristic wave impedance* ($Z_F = 120\pi\,\Omega = 377\,\Omega$). Furthermore, the following relationship holds:

$$E = \sqrt{S \cdot Z_F} \tag{4.64}$$

Therefore, the field strength $E$ at a certain distance $r$ from the radiation source can be calculated using Equation (4.61). $P_{EIRP}$ is the transmission power emitted from the isotropic emitter:

$$E = \sqrt{\frac{P_{EIRP} \cdot Z_F}{4\pi r^2}} \tag{4.65}$$

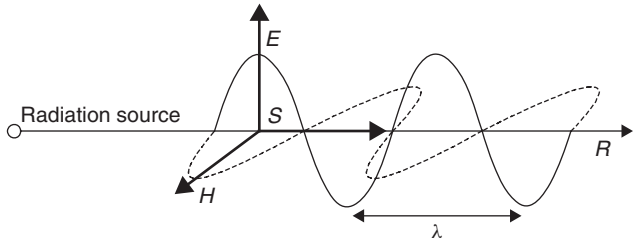


**Figure 4.60** The Poynting radiation vector $S$ as the vector product of $E$ and $H$

## *4.2.4 Polarisation of Electromagnetic Waves*

The *polarisation* of an electromagnetic wave is determined by the direction of the electric field of the wave. We differentiate between *linear polarisation* and *circular polarisation*. In linear polarisation the direction of the field lines of the electric field $E$ in relation to the surface of the Earth provide the distinction between *horizontal* (the electric field lines run parallel to the surface of the Earth) and *vertical* (the electric field lines run at right angles to the surface of the Earth) *polarisation*.

So, for example, the dipole antenna is a linear polarised antenna in which the electric field lines run parallel to the dipole axis. A dipole antenna mounted at right angles to the Earth's surface thus generates a vertically polarised electromagnetic field.

The transmission of energy between two linear polarised antennas is optimal if the two antennas have the same polarisation direction. Energy transmission is at its lowest point, on the other hand, when the polarisation directions of transmission and receiving antennas are arranged at exactly 90° or 270° in relation to one another (e.g. a horizontal antenna and a vertical antenna). In this situation an additional damping of 20 dB has to be taken into account in the power transmission due to *polarisation losses* (Rothammel, 2001), i.e. the receiving antenna draws just 1/100 of the maximum possible power from the emitted electromagnetic field.

In RFID systems, there is generally no fixed relationship between the position of the portable transponder antenna and the reader antenna. This can lead to fluctuations in the read range that are both high and unpredictable. This problem is aided by the use of circular polarisation in the reader antenna. The principle generation of circular polarisation is shown in Figure 4.61: two dipoles

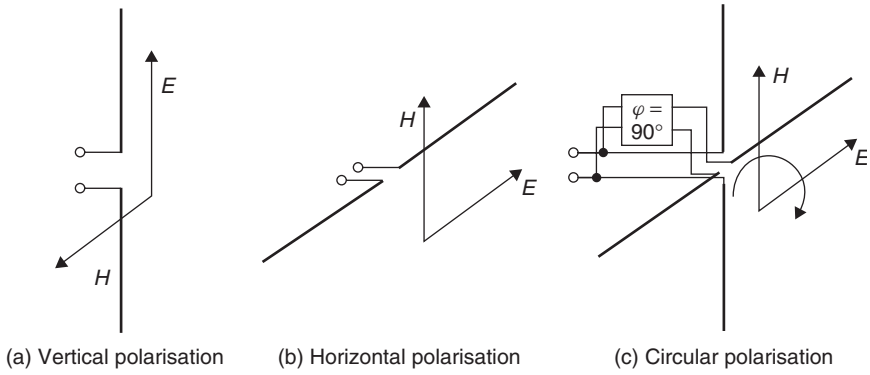


**Figure 4.61** Definition of the polarisation of electromagnetic waves

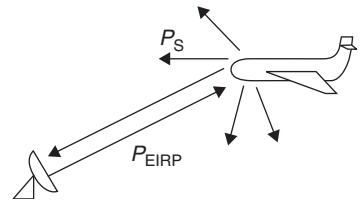


**Figure 4.62** Reflection off a distant object is also used in radar technology

are fitted in the form of a cross. One of the two dipoles is fed via a 90° ($\lambda/4$) delay line. The polarisation direction of the electromagnetic field generated in this manner rotates through 360° every time the wavefront moves forward by a wavelength. The rotation direction of the field can be determined by the arrangement of the delay line. We differentiate between left-handed and right-handed circular polarisation.

A polarisation loss of 3 dB should be taken into account between a linear and a circular polarised antenna; however, this is independent of the polarisation direction of the receiving antenna (e.g. the transponder).

#### 4.2.4.1 Reflection of Electromagnetic Waves

An *electromagnetic wave* emitted into the surrounding space by an antenna encounters various objects. Part of the high-frequency energy that reaches the object is absorbed by the object and converted into heat; the rest is scattered in many directions with varying intensity.

A small part of the reflected energy finds its way back to the transmitter antenna. *Radar technology* uses this reflection to measure the distance and position of distant objects.

In RFID systems the reflection of electromagnetic waves (*backscatter system, modulated radar cross-section*) is used for the transmission of data from a transponder to a reader. Because the *reflective properties* of objects generally increase with increasing frequency, these systems are used mainly in the frequency ranges of 868 MHz (Europe), 915 MHz (USA), 2.45 GHz and above.

Let us now consider the relationships in an RFID system. The antenna of a reader emits an electromagnetic wave in all directions of space at the transmission power $P_{EIRP}$. The *radiation density* $S$ that reaches the location of the transponder can easily be calculated using Equation (4.61). The transponder's antenna reflects a power $P_S$ that is proportional to the power density $S$ and the so-called *radar cross-section* $\sigma$ is:

$$P_S = \sigma \cdot S \tag{4.66}$$

The reflected electromagnetic wave also propagates into space spherically from the point of reflection. Thus the radiation power of the reflected wave also decreases in proportion to the square of the distance ($r^2$) from the radiation source (i.e. the reflection). The following power density finally returns to the reader's antenna:

$$S_{Back} = \frac{P_S}{4\pi r^2} = S \cdot \frac{\sigma}{4\pi r^2} = \frac{P_{EIRP}}{4\pi r^2} \cdot \frac{\sigma}{4\pi r^2} = \frac{P_{EIRP} \cdot \sigma}{(4\pi)^2 \cdot r^4} \tag{4.67}$$

The radar cross-section $\sigma$ (RCS, scatter aperture) is a measure of how well an object reflects electromagnetic waves. The radar cross-section depends upon a range of parameters, such as object size, shape, material, surface structure, but also wavelength and polarisation.

The radar cross-section can only be calculated precisely for simple surfaces such as spheres, flat surfaces and the like (for example see Baur, 1985). The material also has a significant influence.

For example, *metal surfaces* reflect much better than plastic or composite materials. Because the dependence of the radar cross-section $\sigma$ on wavelength plays such an important role, objects are divided into three categories:

- Rayleigh range: the wavelength is large compared with the object dimensions. For objects smaller than around half the wavelength, $\sigma$ exhibits a $\lambda^{-4}$ dependency and so the reflective properties of objects smaller than $0.1\lambda$ can be completely disregarded in practice.
- Resonance range: the wavelength is comparable with the object dimensions. Varying the wavelength causes $\sigma$ to fluctuate by a few decibels around the geometric value. Objects with sharp resonance, such as sharp edges, slits and points may, at certain wavelengths, exhibit resonance step-up of $\sigma$. Under certain circumstances this is particularly true for antennas that are being irradiated at their resonant wavelengths (resonant frequency).
- Optical range: the wavelength is small compared with the object dimensions. In this case, only the geometry and position (angle of incidence of the electromagnetic wave) of the object influence the radar cross-section.

Backscatter RFID systems employ antennas with different construction formats as reflection areas. Reflections at transponders therefore occur exclusively in the resonance range. In order to understand and make calculations about these systems we need to know the radar cross-section $\sigma$ of a resonant antenna. A detailed introduction to the calculation of the radar cross-section can therefore be found in the following sections.

It also follows from Equation (4.67) that the power reflected back from the transponder is proportional to the fourth root of the power transmitted by the reader (Figure 4.63). In other words: if we wish to double the power density $S$ of the reflected signal from the transponder that arrives at the reader, then, all other things being equal, the transmission power must be multiplied by sixteen!

## *4.2.5 Antennas*

The creation of electromagnetic waves has already been described in detail in the previous section (see also Sections 4.1.6 and 4.2.1). The laws of physics tell us that the radiation of electromagnetic waves can be observed in all conductors that carry voltage and/or current. In contrast to these effects, which tend to be parasitic, an *antenna* is a component in which the radiation or reception of electromagnetic waves has been to a large degree optimised for certain frequency ranges by the

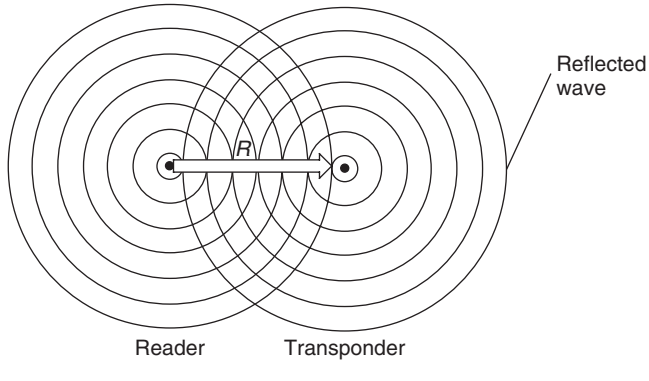


**Figure 4.63** Propagation of waves emitted and reflected at the transponder

fine-tuning of design properties. In this connection, the behaviour of an antenna can be precisely predicted and is exactly defined mathematically.

#### 4.2.5.1 Gain and Directional Effect

Section 4.2.2 demonstrated how the power $P_{\mathrm{EIRP}}$ emitted from an *isotropic emitter* at a distance $r$ is distributed in a fully uniform manner over a spherical surface area. If we integrate the power density $S$ of the electromagnetic wave over the entire surface area of the sphere the result we obtain is, once again, the power $P_{\mathrm{EIRP}}$ emitted by the isotropic emitter.

$$P_{\mathrm{EIRP}} = \int_{\mathrm{A_{sphere}}} S \cdot \mathrm{d}A \tag{4.68}$$

However, a real antenna, for example a dipole, does not radiate the supplied power uniformly in all directions. For example, no power at all is radiated by a *dipole antenna* in the axial direction in relation to the antenna.

Equation (4.68) applies for all types of antennas. If the antenna emits the supplied power with varying intensity in different directions, then Equation (4.68) can only be fulfilled if the radiation density $S$ is greater in the preferred direction of the antenna than would be the case for an isotropic emitter. Figure 4.64 shows the *radiation pattern* of a dipole antenna in comparison to that of an isotropic emitter. The length of the vector $G(\Theta)$ indicates the relative radiation density in the direction of the vector. In the *main radiation direction* ($G_{\mathrm{i}}$) the radiation density can be calculated as follows:

$$S = \frac{P_{\mathrm{l}} \cdot G_{\mathrm{i}}}{4\pi \cdot r^2} \tag{4.69}$$

$P_{\mathrm{l}}$ is the power supplied to the antenna. $G_{\mathrm{i}}$ is termed the gain of the antenna and indicates the factor by which the radiation density $S$ is greater than that of an isotropic emitter at the same transmission power.

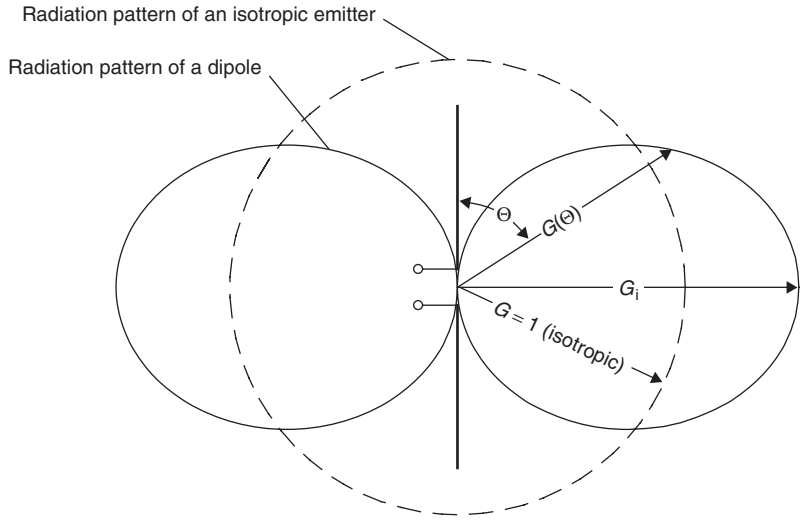


**Figure 4.64** Radiation pattern of a dipole antenna in comparison to the radiation pattern of an isotropic emitter

**Table 4.7** In order to emit a constant EIRP in the main radiation direction less transmission power must be supplied to the antenna as the antenna gain $G$ increases

| EIRP = 4 W | Power $P_1$ fed to the antenna (W) |
|---|---|
| Isotropic emitter $G_i = 1$ | 4 |
| Dipole antenna | 2.44 |
| Antenna $G_i = 3$ | 1.33 |

An important radio technology term in this connection is the *EIRP* (effective isotropic radiated power).

$$P_{EIRP} = P_1 \cdot G_i \tag{4.70}$$

This figure can often be found in radio licensing regulations (e.g. Section 5.2.4) and indicates the transmission power at which an isotropic emitter (i.e. $G_i = 1$) would have to be supplied in order to generate a defined radiation power at distance $r$. An antenna with a gain $G_i$ may therefore only be supplied with a transmission power $P_1$ that is lower by this factor so that the specified limit value is not exceeded:

$$P_1 = \frac{P_{EIRP}}{G_i} \tag{4.71}$$

#### 4.2.5.2 EIRP and ERP

In addition to power figures in EIRP we frequently come across the power figure ERP (equivalent radiated power) in radio regulations and technical literature. The ERP is also a reference power figure. However, in contrast to the EIRP, ERP relates to a dipole antenna rather than a spherical emitter. An ERP power figure thus expresses the transmission power at which a dipole antenna must be supplied in order to generate a defined emitted power at a distance of $r$. Since the gain of the dipole antenna ($G_i = 1.64$) in relation to an isotropic emitter is known, it is easy to convert between the two figures:

$$P_{EIRP} = P_{ERP} \cdot 1.64 \tag{4.72}$$

#### 4.2.5.3 Input Impedance

A particularly important property of the antenna is the complex *input impedance* $Z_A$. This is made up of a complex resistance $X_A$, a loss resistance $R_V$ and the so-called *radiation resistance* $R_r$:

$$Z_A = R_r + R_V + jX_A \tag{4.73}$$

The loss resistance $R_V$ is an effective resistance and describes all losses resulting from the ohmic resistance of all current-carrying line sections of the antenna (Figure 4.65). The power converted by this resistance is converted into heat.

The radiation resistance $R_r$ also takes the units of an effective resistance, but the power converted within it corresponds with the power emitted from the antenna into space in the form of electromagnetic waves.

At the operating frequency (i.e. the resonant frequency of the antenna) the complex resistance $X_A$ of the antenna tends towards zero. For a loss-free antenna (i.e. $R_V = 0$):

$$Z_A(f_{RES}) = R_r \tag{4.74}$$

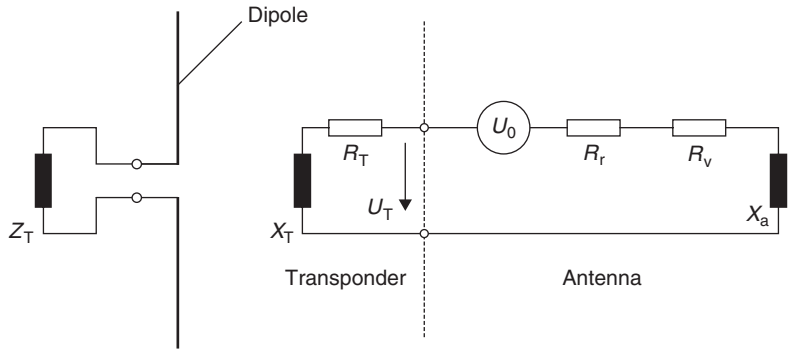


**Figure 4.65** Equivalent circuit of an antenna with a connected transponder

The input impedance of an ideal antenna in the resonant case is thus a real resistance with the value of the radiation resistance $R_r$. For a $\lambda/2$ dipole the radiation resistance $R_r = 73\,\Omega$.

#### 4.2.5.4 Effective Aperture and Scatter Aperture

The maximum received power that can be drawn from an antenna, given optimal alignment and correct polarisation, is proportional to the power density $S$ of an incoming plane wave and a proportionality factor. The proportionality factor has the dimension of an area and is thus called the *effective aperture* $A_e$. The following applies:

$$P_e = A_e \cdot S \tag{4.75}$$

We can envisage $A_e$ as an area at right angles to the direction of propagation, through which, at a given radiation density $S$, the power $P_e$ passes (Meinke and Gundlach, 1992). The power that passes through the effective aperture is absorbed and transferred to the connected terminating impedance $Z_T$ (Figure 4.66).

In addition to the effective aperture $A_e$, an antenna also possesses a *scatter aperture* $\sigma = A_s$ at which the electromagnetic waves are reflected.

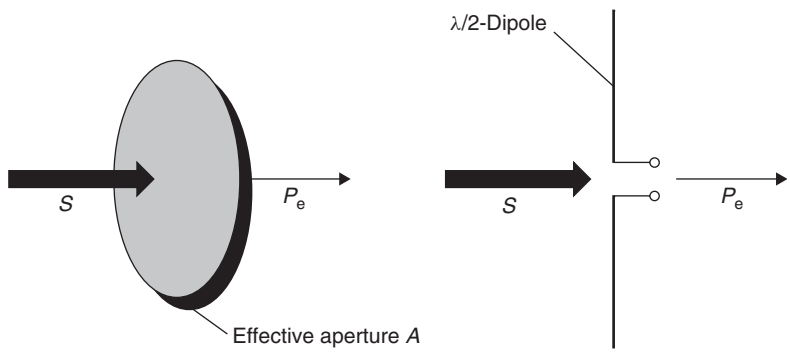


**Figure 4.66** Relationship between the radiation density $S$ and the received power $P$ of an antenna

In order to improve our understanding of this, let us once again consider Figure 4.65. When an electromagnetic field with radiation density $S$ is received a voltage $U_0$ is induced in the antenna, which represents the cause of a current $I$ through the antenna impedance $Z_A$ and the terminating impedance $Z_T$. The current $I$ is found from the quotient of the induced voltage $U_0$ and the series connection of the individual impedances (Kraus, 1988):

$$\mathrm{I} = \frac{\mathrm{U}_0}{\mathrm{Z}_\mathrm{T} + \mathrm{Z}_\mathrm{A}} = \frac{\mathrm{U}_0}{\sqrt{(\mathrm{R}_\mathrm{r} + \mathrm{R}_\mathrm{V} + \mathrm{R}_\mathrm{T})^2 + (\mathrm{X}_\mathrm{A} + \mathrm{X}_\mathrm{T})^2}} \tag{4.76}$$

Furthermore for the received power $P_e$ transferred to $Z_T$:

$$P_e = I^2 \cdot R_T \tag{4.77}$$

Let us now substitute $I^2$ in Equation (4.77) for the expression in Equation (4.76), obtaining:

$$P_e = \frac{U_0^2 \cdot R_T}{(R_r + R_V + R_T)^2 + (X_A + X_T)^2} \tag{4.78}$$

According to Equation (4.75) the effective aperture $A_e$ is the quotient of the received power $P_e$ and the radiation density $S$. This finally yields:

$$A_e = \frac{P_e}{S} = \frac{U_0^2 \cdot R_T}{S \cdot [(R_r + R_V + R_T)^2 + (X_A + X_T)^2]} \tag{4.79}$$

If the antenna is operated using power matching, i.e. $R_T = R_V$ and $X_T = -X_A$, then the following simplification can be used:

$$A_e = \frac{{U_0}^2}{4SR_r} \tag{4.80}$$

As can be seen from Figure 4.65 the current $I$ also flows through the radiation resistance $R_r$ of the antenna. The converted power $P_S$ is emitted from the antenna and it makes no difference whether the current $I$ was caused by an incoming electromagnetic field or by supply from a transmitter. The power $P_S$ emitted from the antenna, i.e. the reflected power in the received case, can be calculated from:

$$P_S = I^2 \cdot R_r \tag{4.81}$$

Like the derivation for Equation (4.79), for the scatter aperture $A_s$ we find:

$$\sigma = A_S = \frac{P_S}{S} = \frac{I^2 \cdot R_r}{S} = \frac{{U_0}^2 \cdot R_r}{S \cdot [(R_r + R_V + R_T)^2 + (X_A + X_T)^2]} \tag{4.82}$$

If the antenna is again operated using power matching and is also loss-free, i.e. $R_V = 0$, $R_T = R_r$ and $X_T = -X_A$, then as a simplification:

$$\sigma = A_S = \frac{U_0^2}{4SR_r} \tag{4.83}$$

Therefore, in the case of the power matched antenna $\sigma = A_s = A_e$. This means that only half of the total power drawn from the electromagnetic field is supplied to the terminating resistor $R_T$; the other half is reflected back into space by the antenna.

The behaviour of the scatter aperture $A_s$ at different values of the terminating impedance $Z_T$ is interesting. Of particular significance for RFID technology is the limit case $Z_T = 0$. This represents a short-circuit at the terminals of the antennas. From Equation (4.82) this is found to be:

$$\sigma_{max} = A_{S\text{ - max}} = \frac{{U_0}^2}{SR_r} = 4A_e|_{Z_T=0} \tag{4.84}$$

The opposite limit case consists of the connection of an infinitely high-ohmic terminating resistor to the antenna, i.e. $Z_T \to \infty$. From Equation (4.82) it is easy to see that the scatter aperture $A_s$, just like the current $I$, tends towards zero.

$$\sigma_{min} = A_{S\text{ - min}} = 0|_{Z_T \to \infty} \tag{4.85}$$

The scatter aperture can thus take on any desired value in the range 0–4 $A_e$ at various values of the terminating impedance $Z_T$ (Figure 4.67). This property of antennas is utilised for the data transmission from transponder to reader in backscatter RFID systems (see Section 4.2.6.6).

Equation (4.82) shows only the relationship between the scatter aperture $A_S$ and the individual resistors of the equivalent circuit from Figure 4.65. However, if we are to calculate the reflected power $P_S$ of an antenna (see Section 4.2.4.1) we need the absolute value for $A_S$. The *effective aperture* $A_e$ of an antenna is proportional to its gain $G$ (Kraus, 1988; Meinke and Gundlach, 1992). Since the gain is known for most antenna designs, the effective aperture $A_e$, and thus also

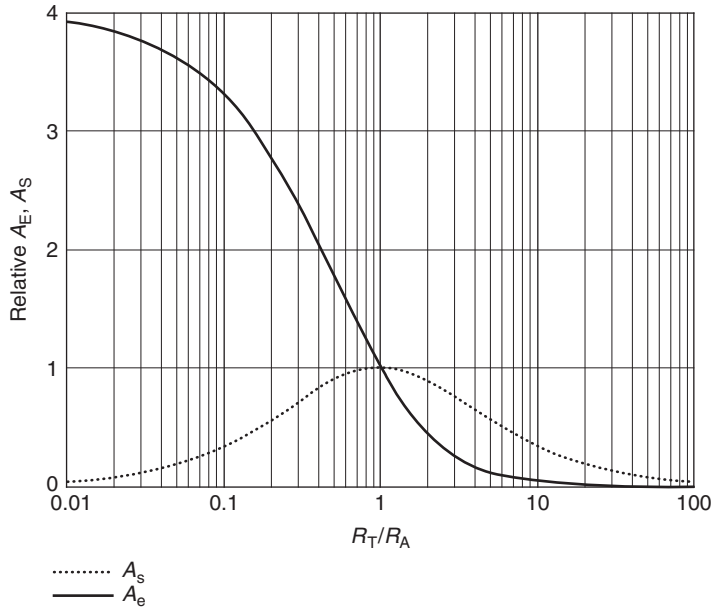


**Figure 4.67** Graph of the relative effective aperture $A_e$ and the relative scatter aperture $\sigma$ in relation to the ratio of the resistances $R_A$ and $R_r$. Where $R_T/R_A = 1$ the antenna is operated using power matching ($R_T = R_r$). The case $R_T/R_A = 0$ represents a short-circuit at the terminals of the antenna

the scatter aperture $A_S$, is simple to calculate for the case of matching ($Z_A = Z_T$). The following is true:[5]

$$\sigma = A_e = \frac{\lambda_0^2}{4\pi} \cdot G \tag{4.86}$$

From Equation (4.75) it thus follows that:

$$P_e = A_e \cdot S = \frac{\lambda_0^2}{4\pi} \cdot G \cdot S \tag{4.87}$$

#### 4.2.5.5 Effective Length

As we have seen, a voltage $U_0$ is induced in the antenna by an electromagnetic field. The voltage $U_0$ is proportional to the electric field strength $E$ of the incoming wave. The proportionality factor has the dimension of a length and is therefore called the *effective length* $l_0$ (also *effective height* $h$) (Meinke and Gundlach, 1992). The following is true:

$$U_0 = l_0 \cdot E = l_0 \cdot \sqrt{S \cdot Z_F} \tag{4.88}$$

For the case of the matched antenna (i.e. $R_r = R_T$) the effective length can be calculated from the effective aperture $A_e$ (Kraus, 1988):

$$l_0 = 2\sqrt{\frac{A_e \cdot R_r}{Z_F}} \tag{4.89}$$

If we substitute the expression in Equation (4.86) for $A_e$, then the effective length of a matched antenna can be calculated from the gain $G$, which is normally known (or easy to find by measuring):

$$l_0 = \lambda_0\sqrt{\frac{G \cdot R_r}{\pi \cdot Z_F}} \tag{4.90}$$

#### 4.2.5.6 Dipole Antennas

In its simplest form the *dipole antenna* consists solely of a straight piece of line (e.g. a copper wire) of a defined length (Figure 4.68). By suitable shaping, the characteristic properties, in particular the *radiation resistance* and bandwidth, can be influenced.

A simple, extended *half-wave dipole* ($\lambda/2$ dipole) consists of a piece of line of length $l = \lambda/2$, which is interrupted halfway along. The dipole is supplied at this break-point (Figure 4.69).

The parallel connection of two $\lambda/2$ pieces of line a small distance apart ($d < 0.05\lambda$) creates the *2-wire folded dipole*. This has around four times the radiation resistance of the single $\lambda/2$ dipole ($R_r = 240$--$280\,\Omega$). According to Rothammel (2001) the following relationship applies:

$$R_r = 73.2\,\Omega \cdot \left( \frac{\lg\left(\frac{4D^2}{d_1 \cdot d_2}\right)}{\lg\left(\frac{2D}{d_2}\right)} \right)^2 \tag{4.91}$$

A special variant of the loop dipole is the 3-wire folded dipole. The radiation resistance of the 3-wire folded dipole is greatly dependent upon the conductor diameter and the distance between the

[5] The derivation of this relationship is not important for the understanding of RFID systems, but can be found in Kraus (1988, Chapter 2–22) if required.

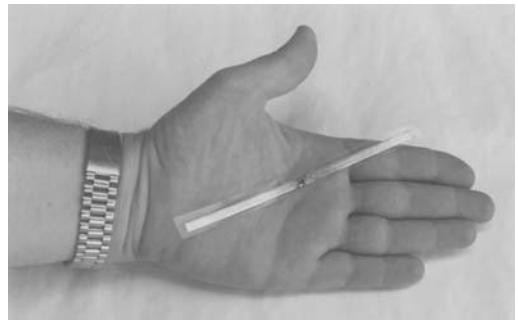

**Figure 4.68** 915 MHz transponder with a simple, extended dipole antenna. The transponder can be seen halfway along (reproduced by permission of Trolleyscan, South Africa)

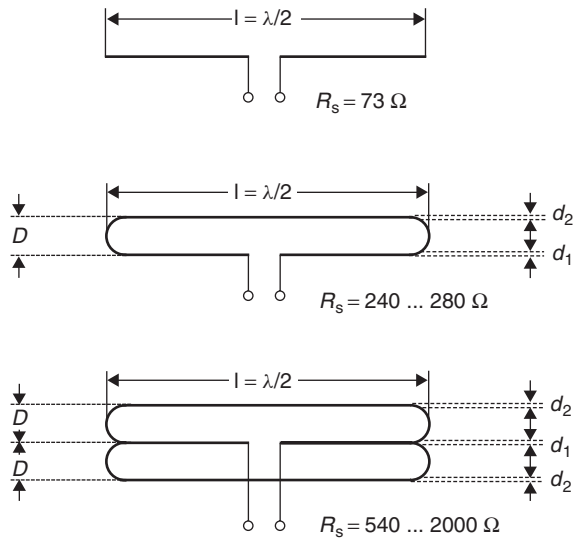


**Figure 4.69** Different dipole antenna designs – from top to bottom: simple extended dipole, 2-wire folded dipole, 3-wire folded dipole

$\lambda/2$ line sections. In practice, the radiation resistance of the 3-wire folded dipole takes on values of 540–2000 Ω. According to Rothammel (2001) the following relationship applies:

$$R_r = 73.2\,\Omega \cdot \left( \frac{\lg\left(\dfrac{4D^3}{d_1^2 \cdot d_2}\right)}{\lg\left(\dfrac{D}{d_2}\right)} \right)^2 \tag{4.92}$$

The bandwidth of a dipole can be influenced by the ratio of the diameter of the $\lambda/2$ line section to its length, increasing as the diameter increases. However, the dipole must then be shortened somewhat in order to allow it to resonate at the desired frequency. In practice, the *shortening*

**Table 4.8** Electrical properties of the dipole and 2-wire folded dipole

| Parameter | Gain $G$ | Effective aperture | Effective length | Apex angle |
|---|---|---|---|---|
| $\lambda/2$ dipole | 1.64 | $0.13\lambda^2$ | $0.32\lambda$ | 78° |
| $\lambda/2$ 2-wire folded dipole | 1.64 | $0.13\lambda^2$ | $0.64\lambda$ | 78° |

*factor* is around 0.90–0.99. For a more precise calculation of this topic, the reader is referred to the antenna literature, e.g. Rothammel (2001), Kraus (1988).

#### 4.2.5.7 Yagi–Uda Antenna

The *Yagi–Uda antenna*, named after its inventors, could well be the most important variant of a *directional antenna* in radio technology.

The antenna is an alignment array, made up of a driven emitter and a series of parasitic elements. A typical Yagi – Uda antenna is shown in Figure 4.70. Parasitic dipoles are arranged in front of the driven emitter (usually a dipole or 2-wire folded dipole) in the desired *direction of maximum radiation*. These parasitic dipoles function as *directors*, while a rod, usually a single rod, behind the exciter acts as a *reflector*. To create the directional transmission, the rods acting as directors must be shorter, and the rod acting as a reflector must be longer, than the exciter operating at resonance (Meinke and Gundlach, 1992). Compared with an isotropic emitter, gains of 9 dBi (based upon three elements) to 12 dB (based upon seven elements) can be achieved with a Yagi–Uda antenna. So-called long Yagi antennas (10, 15 or more elements) can even achieve gains of up to 15 dBi in the main radiation direction.

Due to their size, Yagi–Uda antennas are used exclusively as antennas for readers. Like a torch, the Yagi–Uda antenna transmits in only one direction of maximum radiation, at a precisely known apex angle. Interference from adjacent devices or readers to the side can thus be suppressed and tuned out.

Due to the popularity of the Yagi–Uda antenna both as an antenna for radio and television reception and also in commercial radio technology, there is a huge amount of literature on the operation and construction of this antenna design. Therefore, we will not deal with this antenna in more detail at this point.

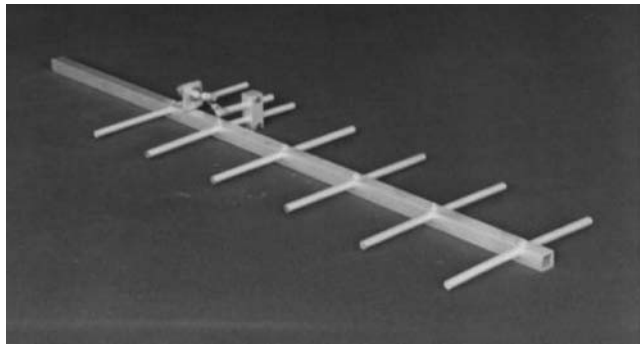

**Figure 4.70** Typical design of a Yagi–Uda directional antenna (six elements), comprising a driven emitter (second transverse rod from left), a reflector (first transverse rod from left) and four directors (third to sixth transverse rods from left) (reproduced by permission of Trolleyscan, South Africa)

#### 4.2.5.8 Patch or Microstrip Antenna

*Patch antennas* (also known as *microstrip* or *planar antennas*) can be found in many modern communication devices. For example, they are used in the latest generations of GPS receivers and mobile telephones, which are becoming smaller all the time. Thanks to their special construction format, patch antennas also offer some advantages for RFID systems.

In its simplest form, a patch antenna comprises a printed circuit board (e.g. Teflon or PTFE for higher frequencies) coated (i.e. metallised) on both sides, the underside of which forms a continuous ground (Kraus, 2000). On the top there is a small rectangle, which is supplied via a microstrip feed on one side, feeders through the base plate or capacitive coupling via an intermediate layer (aperture-coupled patch antenna; see Kossel and Benedicter, n.d., Fries and Kossel, n.d.). Planar antennas can therefore be manufactured cheaply and with high levels of reproducibility using PCB etching technology.

The length $L_p$ of the patch determines the resonant frequency of the antenna. Under the condition $h_D \leqslant \lambda$:

$$L_P = \frac{\lambda}{2} - h_D \tag{4.93}$$

Normally the substrate thickness $h_D$ is 1–2% of the wavelength.

The width $w_p$ influences the resonant frequency of the antenna only slightly, but determines the *radiation resistance* $R_r$ of the antenna (Krug, 1985). Where $w_p < \lambda/2$:

$$R_r = \frac{90}{\frac{\varepsilon_r + 1}{2} + (\varepsilon_r - 1)\sqrt{4 + \frac{48 \cdot h_P}{w_P}}} \cdot \left(\frac{\lambda}{w_p}\right)^2 \tag{4.94}$$

where $w_p > 3\lambda/2$:

$$R_r = \frac{120}{\frac{\varepsilon_r + 1}{2} + (\varepsilon_r - 1)\sqrt{4 + \frac{48 \cdot h_P}{w_P}}} \cdot \frac{\lambda}{w_p} \tag{4.95}$$

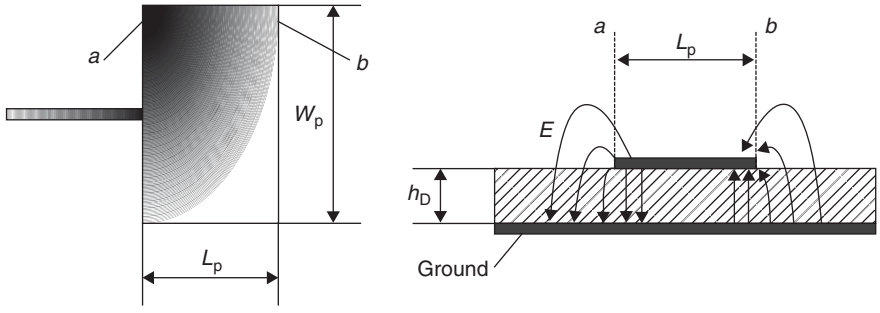


**Figure 4.71** Fundamental layout of a patch antenna. The ratio of $L_p$ to $h_D$ is not shown to scale

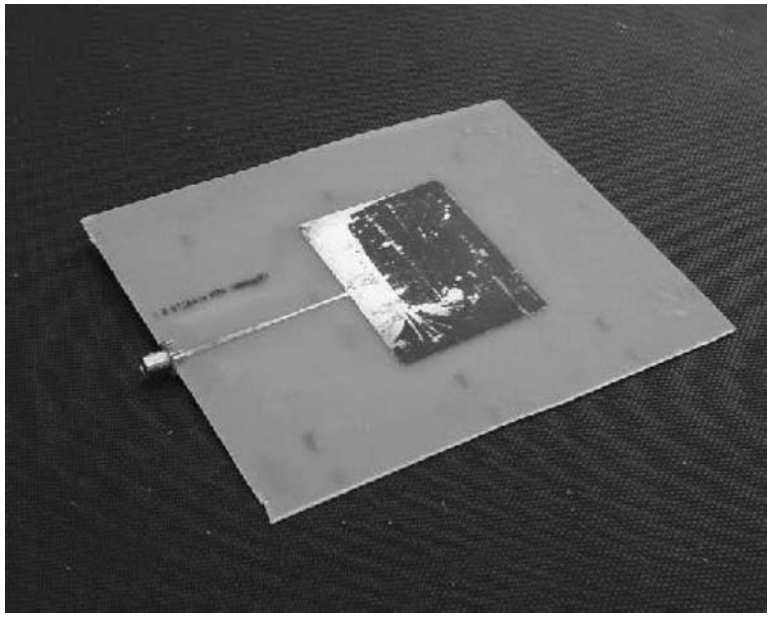

**Figure 4.72** Practical layout of a patch antenna for 915 MHz on a printed circuit board made of epoxy resin (reproduced by permission of Trolleyscan, South Africa)

If the patch antenna is operated at its resonant frequency the phase difference between the patch edges $a$ and $b$ is precisely 180°. Figure 4.71 shows the path of the electrical field lines. At the entry and exit edges of the patch the field lines run in phase. The patch edges $a$ and $b$ thus behave like two in-phase fed slot antennas. The polarisation of the antenna is linear and parallel to the longitudinal edge $L_p$.

Due to the type of power supply, patch antennas can also be used with *circular polarisation*. To generate circular polarisation, an emitter element must be supplied with signals with a phase angle of 90° at only two edges that are geometrically offset by 90°.

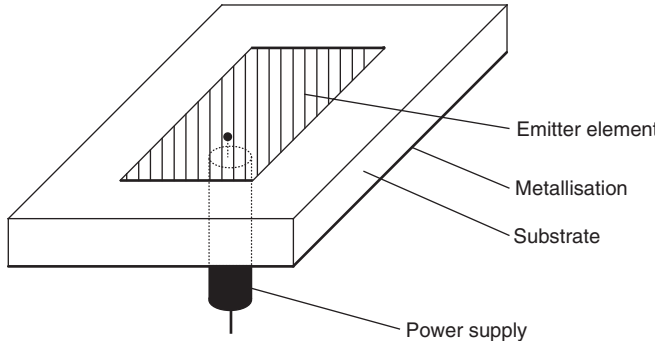


**Figure 4.73** Supply of a $\lambda/2$ emitter quad of a patch antenna via the supply line on the reverse

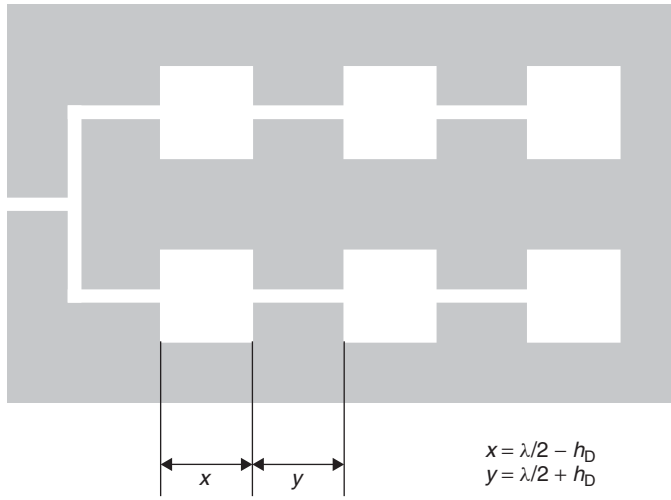


**Figure 4.74** The interconnection of patch elements to form a group increases the directional effect and gain of the antenna

It is a relatively simple matter to amalgamate patch antennas to form *group antennas* (Figure 4.74). As a result, the gain increases in relation to that of an individual element. The layout shown in the figure comprises in-phase fed emitter elements. The approximately $\lambda/2$ long patch elements are fed via almost nonradiative line sections of around $\lambda/2$ in length connected in series, so that the transverse edges $a$–$a$ or $b$–$b$ of the patch element lie precisely wavelength $\lambda$ apart. Thus the in-phase feed to the individual elements is guaranteed. The arrangement is polarised in the direction of the line sections.

#### 4.2.5.9 Slot Antennas

If we cut a strip of length $\lambda/2$ out of the centre of a large metal surface the slot can be used as an emitter (Rothammel, 2001). The width of the slot must be small in relation to its length. The base point of the emitter is located at the mid-point of its longitudinal side.

### *4.2.6 Practical Operation of Microwave Transponders*

Let us now turn our attention to practical operation when a transponder is located in the *interrogation zone* of a reader. Figure 4.76 shows the simplified model of such a *backscatter system*. The reader emits an electromagnetic wave with the effective radiated power $P_1 \cdot G_1$ into the surrounding space. Of this, a transponder receives power $P_2 = P_e$, proportional to the field strength $E$, at distance $r$.

Power $P_S$ is also reflected by the transponder's antenna, of which power $P_3$ is again received by the reader at distance $r$.

#### 4.2.6.1 Equivalent Circuits of the Transponder

In the previous sections we have quoted the simplified equation for the impedance of the transformer $Z_T = R_T + jX_T$ (simplified equivalent circuit). In practice, however, the *input impedance* of a

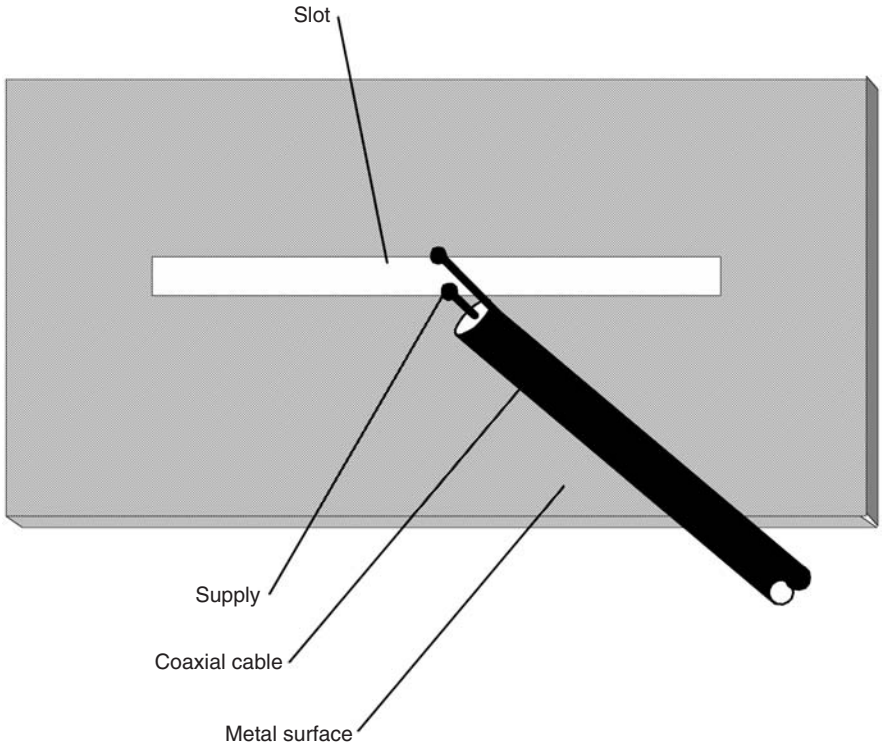


**Figure 4.75** Layout of a slot antenna for the UHF and microwave range

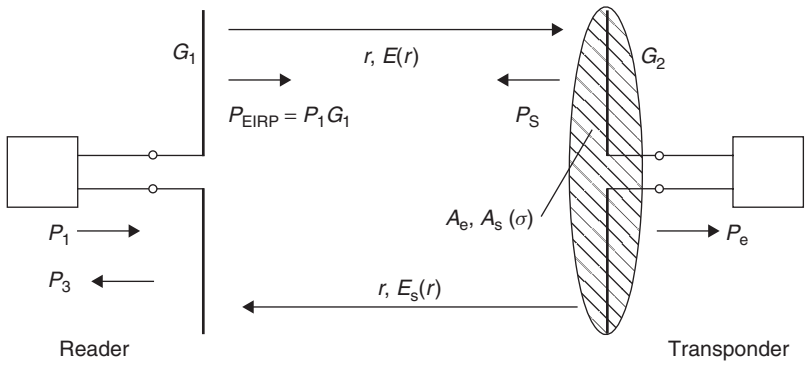


**Figure 4.76** Model of a microwave RFID system when a transponder is located in the interrogation zone of a reader. The figure shows the flow of RF power throughout the entire system

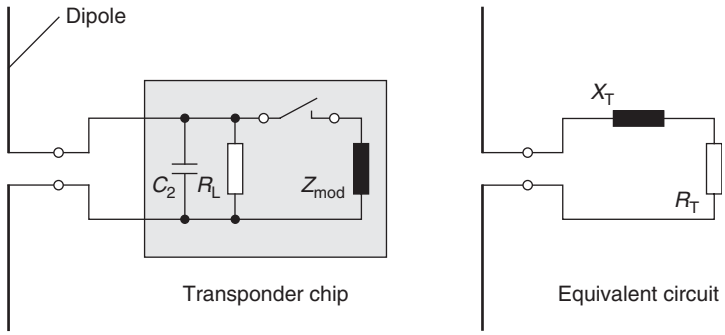


**Figure 4.77** Functional equivalent circuit of the main circuit components of a microwave transponder (left) and the simplified equivalent circuit (right)

transponder can be represented more clearly in the form of the parallel circuit consisting of a *load resistor* $R_L$, an *input capacitor* $C_2$, and possibly a modulation impedance $Z_{mod}$ (see also Section 4.2.6.6).

It is relatively simple to make the conversion between the components of the two equivalent circuits. For example, the transponder impedance $Z_T$ can be determined from the functional or the simplified equivalent circuit, as desired (Figure 4.77).

$$Z_T = jX_T + R_T = \frac{1}{j\omega C_2 + \frac{1}{R_L} + \frac{1}{Z_{mod}}} \tag{4.96}$$

The individual components $R_T$ and $X_T$ of the simplified equivalent circuit can also be simply determined from the components of the functional equivalent circuit. The following is true:

$$R_T = \mathrm{Re}\left(\frac{1}{j\omega C_2 + \frac{1}{R_L} + \frac{1}{Z_{mod}}}\right) \tag{4.97}$$

$$X_T = \mathrm{Im}\left(\frac{1}{j\omega C_2 + \frac{1}{R_L} + \frac{1}{Z_{mod}}}\right) \tag{4.98}$$

#### 4.2.6.2 Power Supply of Passive Transponders

A passive transponder does not have its own *power supply* from an internal voltage source, such as a battery or solar cell. If the transponder is within range of the reader a voltage $U_0$ is induced in the transponder antenna by the field strength $E$ that occurs at distance $r$. Part of this voltage is available at the terminals of the antenna as voltage $U_T$. Only this voltage $U_T$ is rectified and is available to the transponder as supply voltage (rectenna) (Jurianto and Chia, n.d. a, b).

In the case of power matching between the radiation resistor $R_r$ and the input impedance $Z_T$ of the transponder, power $P_2 = P_e$ can be derived from Equation (4.87). Figure 4.78 shows the power available in RFID systems at different distances at the reader's normal transmission power. In order

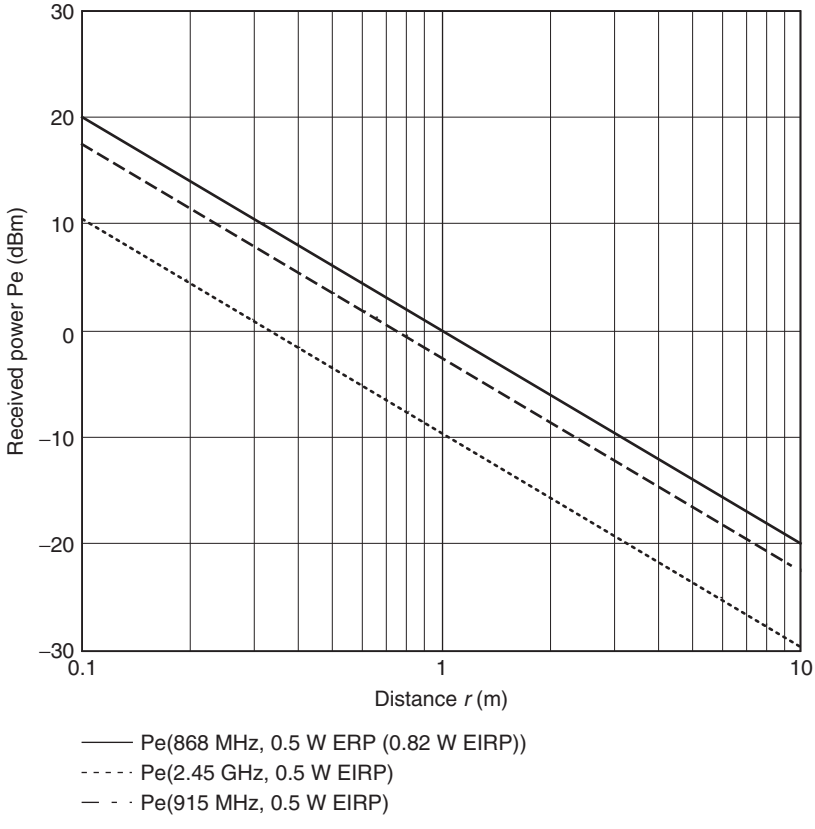


**Figure 4.78** The maximum power $P_e$(0 dBm = 1 mW) available for the operation of the transponder, in the case of power matching at the distance $r$, using a dipole antenna at the transponder

to use this low power as effectively as possible a *Schottky detector* with *impedance matching* is typically used as a rectifier.

A *Schottky diode* consists of a metal–semiconductor sequence of layers. At the boundary layer there is, as in the $p$–n junction, a charge-free space-charge zone and a potential barrier that hinders charge transport. The current–voltage characteristic of the metal–semiconductor transition has a diode characteristic. Schottky diodes function as a rectifier at wavelengths below the microwave range since, unlike the *pn* diode, there are no inertia effects caused by minority carrier injection. Further advantages in comparison with *pn* diodes are the low voltage drop in the direction of flow and the low noise. A possible layout of a Schottky diode is shown in Figure 4.79 (Hewlett Packard 988, n.d.).

A Schottky diode can be represented by a linear *equivalent circuit* (Figure 4.79b). $C_j$ represents the parasitic *junction capacitance* of the chip and $R_s$ is the loss resistance in the terminals of the diode. $R_j$ is the *junction resistor* of the diode, which can be calculated as follows (Agilent Technologies, n.d.):

$$R_j = \frac{8.33 \cdot 10^{-5} \cdot n \cdot T}{I_s + I_b} \tag{4.99}$$

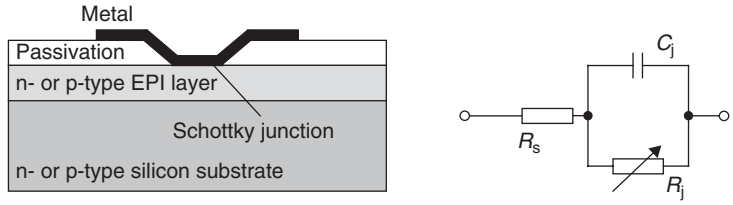


**Figure 4.79** A Schottky diode is created by a metal–semiconductor junction. In small signal operation a Schottky diode can be represented by a linear equivalent circuit

where $n$ is the ideality factor, $T$ the temperature in Kelvin, $I_s$ the saturation current and $I_b$ the bias current through the Schottky diode.

By a suitable combination of the $p$- or $n$-doped semiconductor with the various metals the properties of the Schottky diode can be varied across a wide range. In RFID transponders primarily $p$-doped Schottky diodes are used, since these are particularly suitable for detectors with no zero bias in small signal operation, i.e. for the conditions that occur in every transponder (Hewlett Packard, 988).

The circuit of a Schottky detector for voltage rectification is shown in Figure 4.80. Such a Schottky detector has different operating ranges. If it is driven at power above −10 dBm (0.1 mW) the Schottky detector lies in the range of *linear detection* (Hewlett Packard, 986). Here there is *peak value rectification*, as is familiar from the field of power electronics. The following holds:

$$u_{\text{chip}} \sim \hat{u}_{\text{in}} \Rightarrow u_{\text{chip}} \sim \sqrt{P_{\text{in}}} \tag{4.100}$$

In the case of operation at powers below −20 dBm (10 µW) the detector is in the range of square law detection. The following holds (Hewlett Packard, 986):

$$u_{\text{chip}} \sim \widehat{u_{\text{in}}^2} \Rightarrow u_{\text{chip}} \sim P_{\text{in}} \tag{4.101}$$

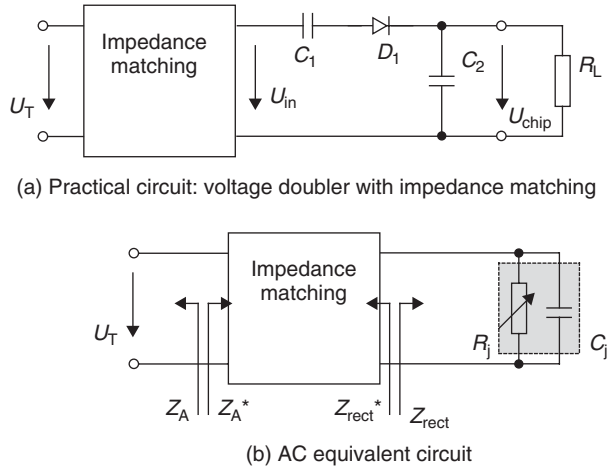


**Figure 4.80** (a) Circuit of a Schottky detector with impedance transformation for power matching at the voltage source; (b) the RF equivalent circuit of the Schottky detector

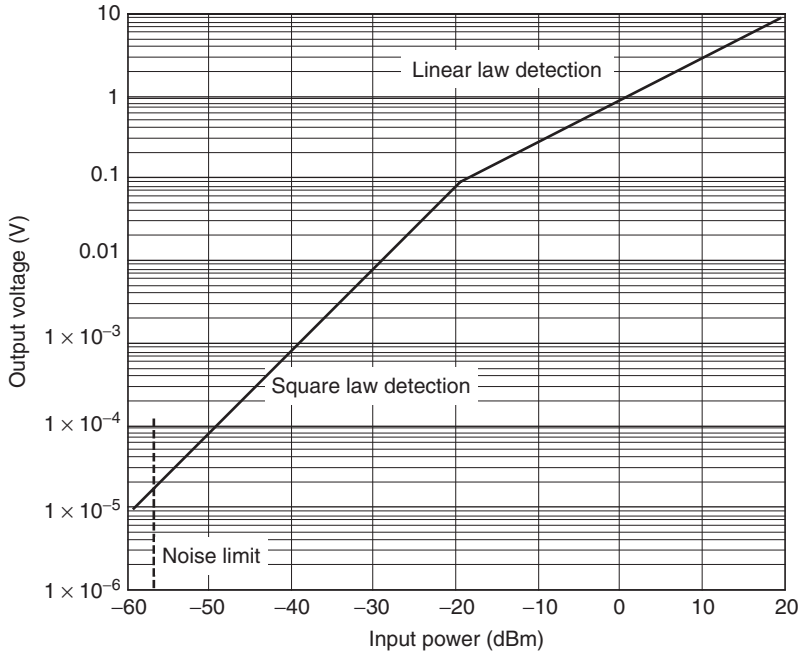


**Figure 4.81** When operated at powers below −20 dBm (10 μW) the Schottky diode is in the square law range

Schottky detectors in RFID transponders operate in the range of *square law detection* at greater distances from the reader, but also in the transition range to linear detection at smaller distances (Figure 4.81).

The relationship between the input power and output voltage of a Schottky detector can be expressed using a Bessel function of zeroth order (Hewlett Packard, 1088):

$$I0\left(\frac{\Lambda}{n}\sqrt{8R_g \cdot P_{in}}\right) = \left(1 + \frac{I_b}{I_s} + \frac{u_{chip}}{R_L \cdot I_s}\right) \cdot e^{\left[\left(1+\frac{R_g + R_s}{R_L}\right) \cdot \frac{\Lambda \cdot u_{chip}}{n} + \frac{\Lambda \cdot R_s \cdot I_b}{n}\right]} \quad (4.102)$$

Where $\Lambda = q/(k \cdot T)$, $q$ is the elementary charge, $k$ is the Boltzmann constant, $T$ is the temperature of the diode in Kelvin, $R_g$ is the internal resistance of the voltage source (in transponders this is the *radiation resistance* $R_r$ of the antenna), $P_{in}$ is the supplied power, $R_L$ is the connected load resistor (transponder chip) and $u_{chip}$ is the output voltage (supply voltage of the transponder chip).

By numerical iteration using a program such as Mathcad (1994) this equation can easily be solved, yielding a diagram $u_{chip}(P_{in})$ (see Figure 4.83). The transition from square law detection to linear law detection at around −20 (10 μW) to −10 dBM (0.1 mW) input power is clearly visible in this figure.

Evaluating Equation (4.102), we see that a higher saturation current $I_s$ leads to good sensitivity in the square law detection range. However, in the range that is of interest for RFID transponders, with output voltages $u_{chip}$ of 0.8–3 V, this effect is unfortunately no longer marked.

In order to further increase the output voltage, *voltage doublers* (Hewlett Packard, 956-4) are used. The circuit of a voltage doubler is shown in Figure 4.82. The output voltage $u_{chip}$ at constant input power $P_{in}$ is almost doubled in comparison to the single Schottky detector (Figure 4.83). The

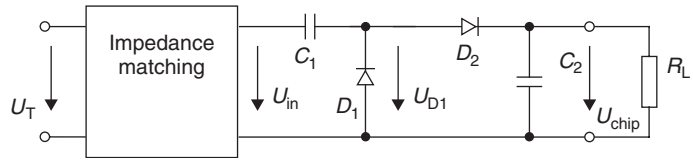


**Figure 4.82** Circuit of a Schottky detector in a voltage doubler circuit (Villard rectifier)

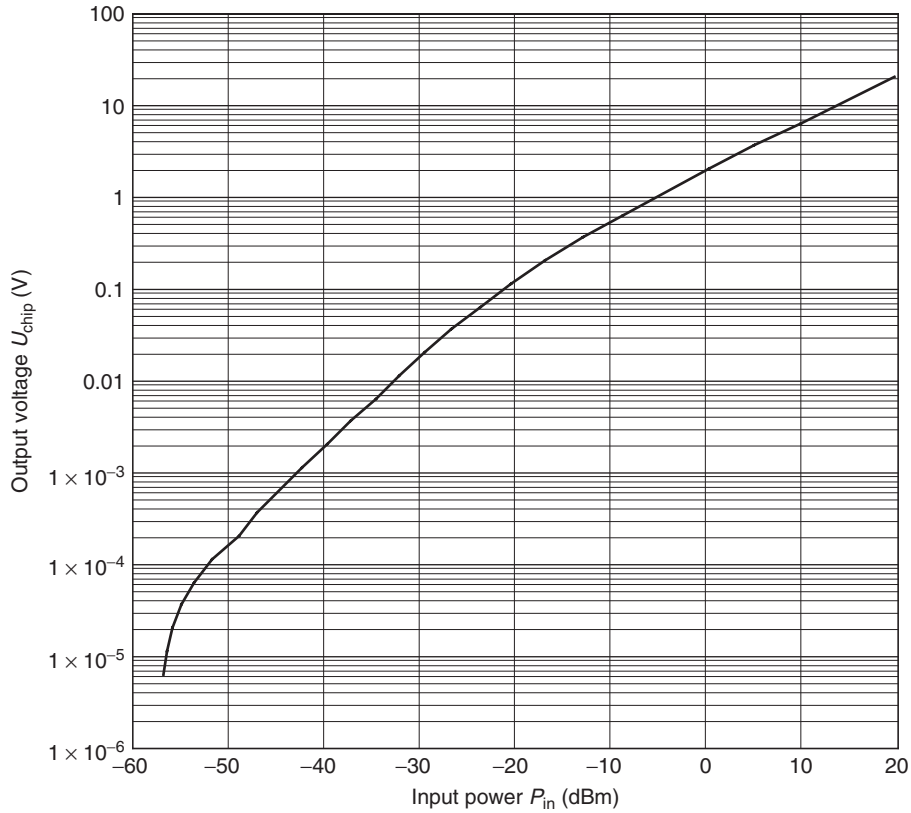


**Figure 4.83** Output voltage of a Schottky detector in a voltage doubler circuit. In the input power range $-20$ to $-10$ dBm the transition from square law to linear law detection can be clearly seen ($R_L = 500\,\text{k}\Omega$, $I_s = 2\,\mu\text{A}$, $n = 1.12$)

Bessel function (Equation 4.102) can also be used for the calculation of the relationship of $P_{in}$ to $u_{chip}$ in voltage doublers. However, the value used for $R_g$ should be doubled, the value $R_L$ should be halved, and the calculated values for the output voltage $u_{chip}$ should also be doubled.

The influence of various operating frequencies on the output voltage is not taken into account in Equation (4.102). In practice, however, a frequency-dependent current flows through the parasitic capacitor $C_j$, which has a detrimental effect upon the efficiency of the Schottky detector. The

influence of the junction capacitance on the output voltage can be expressed by a factor $M$ (Hewlett Packard, 1088). The following holds:

$$M = \frac{1}{1 + \omega^2 C_j^2 R_s R_j} \tag{4.103}$$

However, in the range that is of interest for RFID transponders at output voltages $u_{chip}$ 0.8–3 V and the resulting junction resistances $R_j$ in the range <250 Ω (Hewlett Packard, 1088) the influence of the junction capacitance can largely be disregarded (see also Figure 4.83).

In order to utilise the received power $P_e$ as effectively as possible, the input impedance $Z_{rect}$ of the Schottky detector would have to represent the complex conjugate of the antenna impedance $Z_A$ (voltage source), i.e. $Z_{rect} = Z_A^*$. If this condition is not fulfilled, then only part of the power is available to the Schottky detector, as a glance at Figure 4.67 makes unmistakably clear.

The RF equivalent circuit of a Schottky detector is shown in Figure 4.80. It is the job of the capacitor $C_2$ to filter out all RF components of the generated direct voltage and it is therefore dimensioned such that $X_{C2}$ tends towards zero at the transmission frequency of the reader. In this frequency range the diode (or the equivalent circuit of the diode) thus appears to lie directly parallel to the input of the circuit. The load resistor $R_L$ is short-circuited by the capacitor $C_2$ for the RF voltages and is thus not present in the RF equivalent circuit. $R_L$, however, determines the current $I_b$ through the Schottky detector and thus also the junction resistance $R_j$ of the Schottky diode.

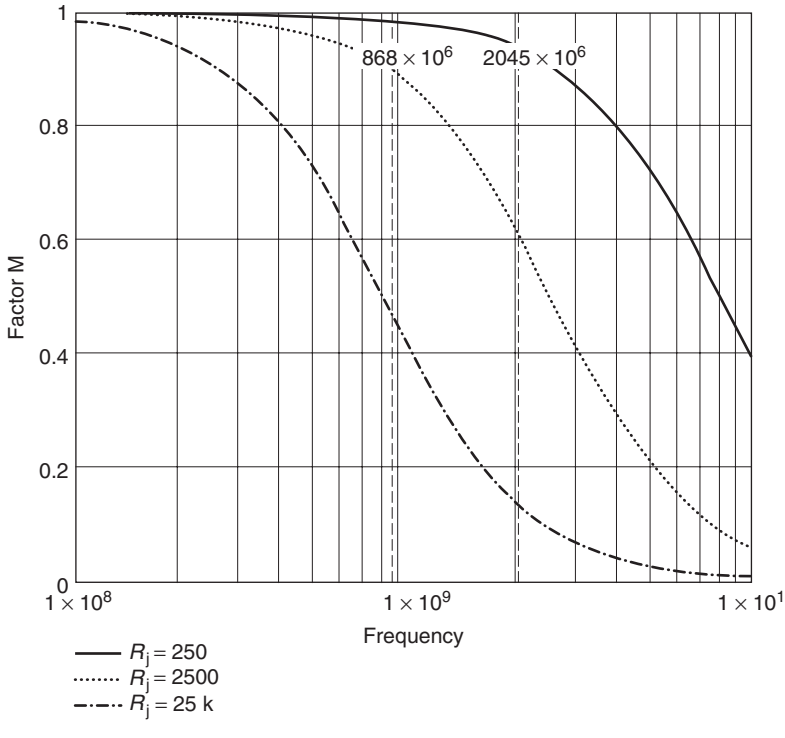


**Figure 4.84** The factor $M$ describes the influence of the parasitic junction capacitance $C_j$ upon the output voltage $u_{chip}$ at different frequencies. As the junction resistance $R_j$ falls, the influence of the junction capacitance $C_j$ also declines markedly. Markers at 868 MHz and 2.45 GHz

The RF equivalent circuit of a voltage doubler correspondingly consists of the parallel connection of two Schottky diodes.

In order to now achieve the required power matching between the antenna and the Schottky detector, the input impedance $Z_{\text{rect}}$ of the Schottky detector must be matched by means of a circuit for the impedance matching at the antenna impedance $Z_{\text{A}}$. In RF technology, discrete components, i.e. $L$ and $C$, but also line sections of differing impedances (line transformation), can be used for this.

At ideal matching, the voltage sensitivity $\gamma 2xs$ (in mV/μW) of a Schottky detector can be simply calculated (Figure 4.85; Hewlett Packard, 963, 1089):

$$\gamma^2 = \frac{0.52}{(I_{\text{s}} + I_{\text{b}}) \cdot (1 + \varpi^2 C_{\text{j}}^2 R_{\text{s}} R_{\text{j}}) \cdot \left(1 + \dfrac{R_j}{R_L}\right)} \tag{4.104}$$

The theoretical maximum of $\gamma 2$ lies at 200 mV/μW (868 MHz) for a Schottky diode of type HSM 2801, and occurs at a total diode current $I_{\text{T}} = I_{\text{s}} + I_{\text{b}}$ of 0.65 μA. The saturation current $I_{\text{s}}$ of the selected Schottky diode is, however, as low as 2 μA, which means that in theory this voltage sensitivity is completely out of reach, even at an operating current $I_{\text{b}} = 0$. Additionally, the junction resistance $R_{\text{j}} = 40\,\text{k}\Omega$ that results at $I_{\text{T}} = 0.65\,\mu\text{A}$ can hardly be approximately transformed without loss using real components at the low-ohmic source impedance of the antenna $Z_{\text{A}} = 73\,\Omega + j0\,\Omega$. Finally, the influence of the parasitic junction capacitance $C_{\text{j}}$ at such high-ohmic junction resistances is clearly visible, and shows itself in a further reduction in the voltage sensitivity, particularly at 2.45 GHz.

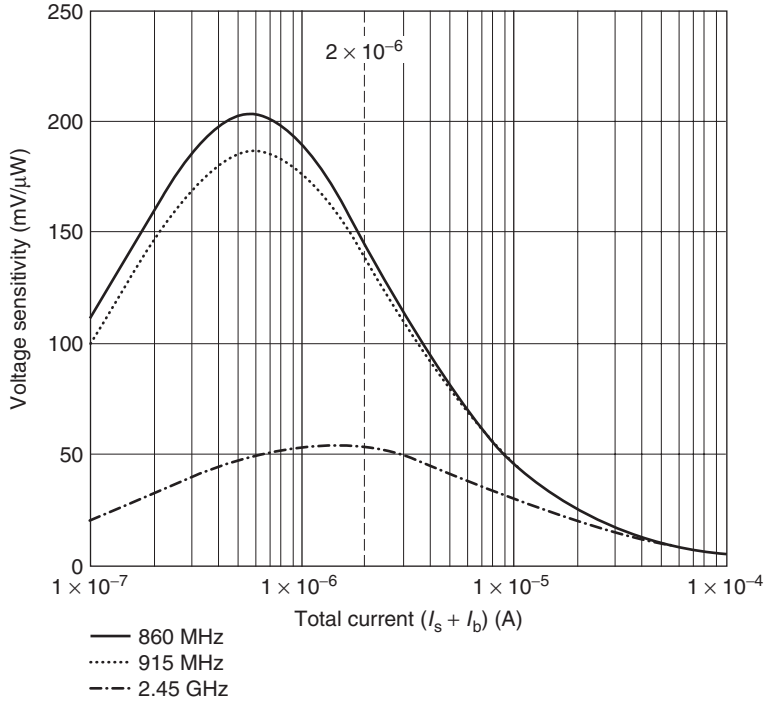


**Figure 4.85** Voltage sensitivity $\gamma^2$ of a Schottky detector in relation to the total current $I_{\text{T}} \cdot C_{\text{j}} = 0.25$ pF, $R_{\text{s}} = 25\Omega$, $R_{\text{L}} = 100$ kΩ

In practice, Schottky detectors are operated at currents of 2.5–25 μA, which leads to a significantly lower junction resistance. In practice, values around 50 mV/μW can be assumed for voltage sensitivity (Hewlett Packard, 1089).

Due to the influencing parameters described above it is a great challenge for the designer designing a Schottky detector for an RFID transponder to select a suitable Schottky diode for the operating case in question and to set all operating parameters such that the voltage sensitivity of the Schottky detector is as high as possible.

Let us finally consider another example of the *matching* of a Schottky voltage doubler to a dipole antenna. Based upon two Schottky diodes connected in parallel in the RF equivalent circuit ($L_p = 2\,\text{nH}$, $C_p = 0.08\,\text{pF}$, $R_s = 20\,\Omega$, $C_j = 0.16\,\text{pF}$, $I_T = 3\,\mu\text{A}$, $R_j = 8.6\,\text{k}\Omega$) we obtain an impedance $Z_{rect} = 37 - j374\,\Omega\,(|Z_{rect}| = 375\,\Omega)$. The Smith diagram in Figure 4.86 shows a

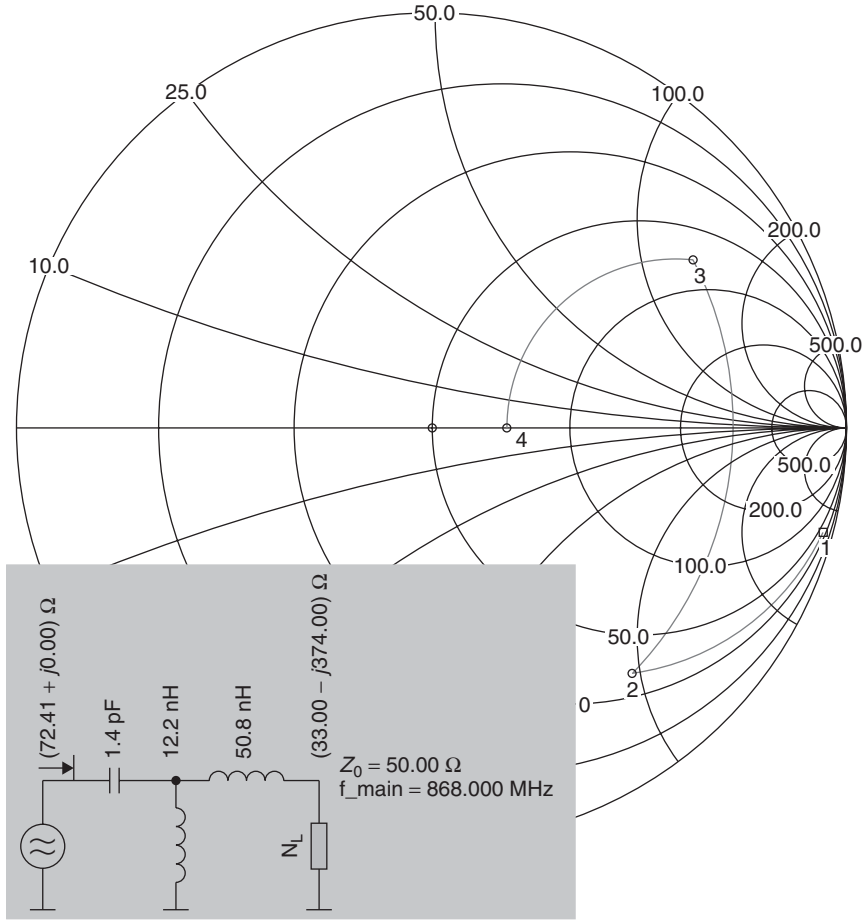


**Figure 4.86** Matching of a Schottky detector (point 1) to a dipole antenna (point 4) by means of the series connection of a coil (point 1–2), the parallel connection of a second coil (point 2–3), and finally the series connection of a capacitor (point 3–4)

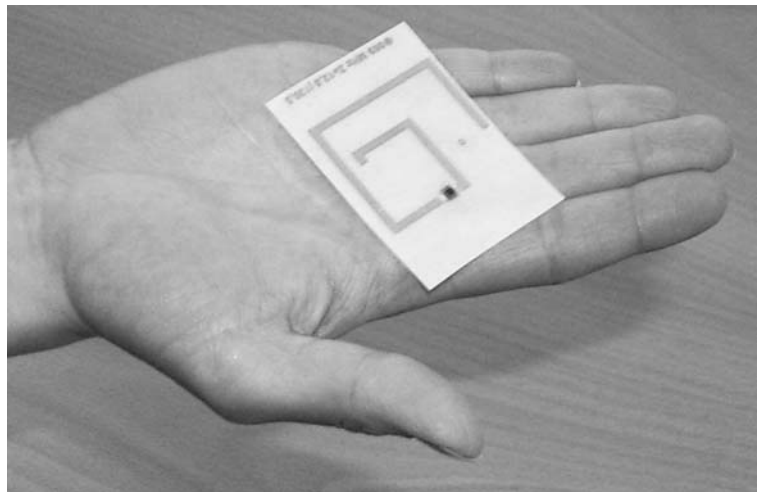

**Figure 4.87** By suitable design of the transponder antenna the impedance of the antenna can be designed to be the complex conjugate of the input impedance of the transponder chip (reproduced by permission of Rafsec, Palomar-Konsortium, PALOMAR-Transponder)

possible transformation route, plus the values and sequence of the components used in this example that would be necessary to perform a matching to 72 Ω (dipole in resonance).

It is not always sensible or desirable to perform *impedance matching* between transponder chip and antenna by means of discrete components. Particularly in the case of labels, in which the transponder chip is mounted directly upon foil, additional components are avoided where possible.

If the elements of a dipole are shortened or lengthened (i.e. operated at above or below their resonant frequency), then the impedance $Z_A$ of the antenna contains an inductive or capacitive component $X_T \neq 0$. Furthermore, the radiation resistance $R_s$ can be altered by the construction format. By a suitable antenna design it is thus possible to set the input impedance of the antenna to be the complex conjugate of the input impedance of the transponder, i.e. $Z_T = Z_A^*$. The power matching between transponder chip and antenna is thereby only realised by the antenna.

#### 4.2.6.3 Power Supply of Active Transponders

In active transponders the power supply of the semiconductor chip is provided by a *battery*. Regardless of the distance between transponder and reader the voltage is always high enough to operate the circuit. The voltage supplied by the antenna is used to activate the transponder by means of a detection circuit. In the absence of external activation the transponder is switched into a power-saving mode in order to save the battery from unnecessary discharge.

Depending upon the type of evaluation circuit a much lower received power $P_e$ is needed to activate the transponder than is the case for a comparable passive transponder. Thus the read range is greater compared with a passive transponder. In practice, ranges of over 10 m are normal.

#### 4.2.6.4 Reflection and Cancellation

The electromagnetic field emitted by the reader is not only reflected by a transponder, but also by all objects in the vicinity, the spatial dimension of which is greater than the wavelength $\lambda_o$ of

the field (see also Section 4.2.4.1). The reflected fields are superimposed upon the primary field emitted by the reader. This leads alternately to a local damping or even so-called *cancellation* (antiphase superposition) and an amplification (in-phase superposition) of the field at intervals of $\lambda_0/2$ between the individual minima. The simultaneous occurrence of many individual reflections of varying intensity at different distances from the reader leads to a very erratic path of field strength $E$ around the reader, with many local zones of cancellation of the field. Such effects should be expected, particularly in an environment containing large metal objects, e.g. in an industrial operation (machines, metal pipes etc.).

We are all familiar with the effect of *reflection* and cancellation in our daily lives. In built-up areas it is not unusual to find that when you stop your car at traffic lights you are in a 'radio gap' (i.e. a local cancellation) and instead of your favourite radio station all you can hear from the radio is noise. Experience shows that it is generally sufficient to roll the car forward just a short way, thus leaving the area of local cancellation, in order to restore the reception.

In RFID systems these effects are much more disruptive, since a transponder at a local field strength minimum may not have enough power at its disposal for operation. Figure 4.88 shows the results of the measurement of the reader's field strength $E$ at an increasing distance from the transmission antenna when reflections occur in close proximity to the reader.

#### 4.2.6.5 Sensitivity of the Transponder

Regardless of the type of power supply of the transponder a minimum *field strength E* is necessary to activate the transponder or supply it with sufficient energy for the operation of the circuit. The

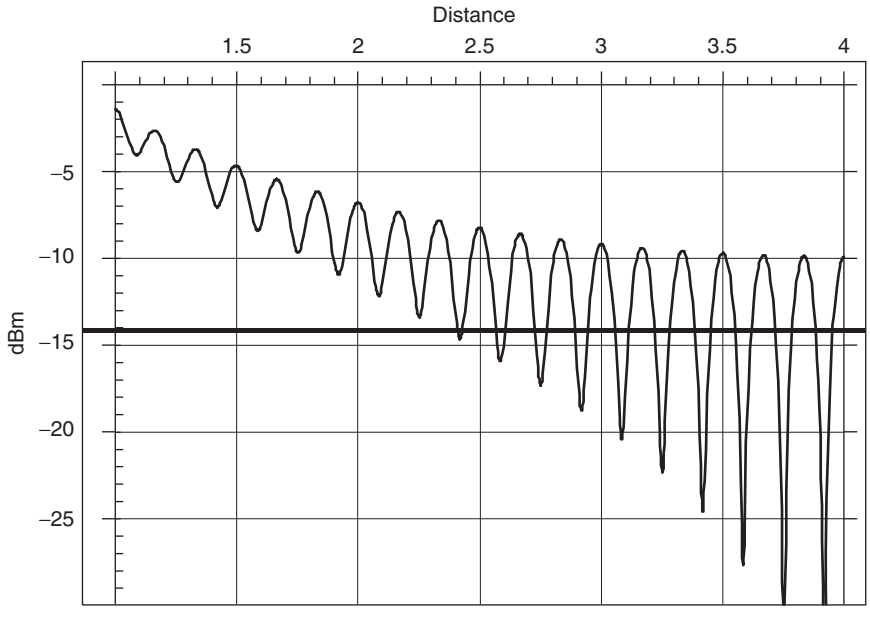


**Figure 4.88** The superposition of the field originally emitted with reflections from the environment leads to local cancellations. *x* axis, distance from reader antenna; *y* axis, path attenuation in decibels (reproduced by permission of Rafsec, Palomar-Konsortium)

minimum field strength is called the *interrogation field strength* $E_{\min}$ and is simple to calculate. Based upon the minimum required RF input power $P_{e-\min}$ of the *Schottky detector* and of the transponder antenna gain $G$ we find:

$$E_{\min} = \sqrt{\frac{4\pi \cdot Z_F \cdot P_{e\text{ - min}}}{\lambda_0^2 \cdot G}} \tag{4.105}$$

This is based upon the prerequisite that the *polarisation directions* of the reader and transponder antennas precisely correspond. If the transponder is irradiated with a field that has a different polarisation direction, then $E_{\min}$ increases accordingly.

#### 4.2.6.6 Modulated Backscatter

As we have already seen, the transponder antenna reflects part of the irradiated power at the *scatter aperture* $\sigma$ ($A_s$) of the *transponder antenna*. In this manner, a small part of the power $P_1$ that was originally emitted by the reader returns to the reader via the transponder as received power $P_3$.

The dependence of the scatter aperture $\sigma$ on the relationship between $Z_T$ and $Z_A$ established in Section 4.2.5.4 is used in RFID transponders to send data from the transponder to the reader. To achieve this, the input impedance $Z_T$ of the transponder is altered in time with the data stream to be transmitted by the switching on and off of an additional impedance $Z_{mod}$ in time with the data stream to be transmitted. As a result, the scatter aperture $\sigma$, and thus the power $P_S$ reflected by the transponder, is changed in time with the data, i.e. it is modulated. This procedure is therefore also known as *modulated backscatter* or *$\sigma$-modulation*.

In order to investigate the relationships in a RFID transponder more precisely, let us now refer back to Equation (4.82), since this equation expresses the influence of the transponder impedance $Z_T = R_T + X_T$ on the scatter aperture $\sigma$. In order to replace $U_0^2$ by the general properties of the transponder antenna we first substitute Equation (4.90) into Equation (4.88) and obtain:

$$U_0 = \lambda_0 \cdot \sqrt{\frac{G \cdot R_r}{\pi \cdot Z_F}} \cdot \sqrt{S \cdot Z_F} = \lambda_0 \cdot \sqrt{\frac{G \cdot R_r \cdot S}{\pi}} \tag{4.106}$$

We now replace $U_0$ in Equation (4.82) by the right-hand expression in Equation (4.106) and finally obtain (PALOMAR, 18 000):

$$\sigma = \frac{{\lambda_0}^2 \cdot R_r^2 \cdot G}{\pi \cdot [(R_r + R_V + R_T)^2 + (X_A + X_T)^2]} \tag{4.107}$$

where $G$ is the gain of the transponder antenna.

However, a drawback of this equation is that it only expresses the value of the scatter aperture $\sigma$(PALOMAR, 18 000). If, for the clarification of the resulting problems, we imagine a transponder, for which the imaginary component of the input impedance $Z_T$ in unmodulated state takes the value $X_{Toff} = -X_A + \Delta X_{mod}$, but in the modulated state (modulation impedance $Z_{mod}$ connected in parallel) it is $X_{Ton} = -X_A - \Delta X_{mod}$. We further assume that the real component $R_T$ of the input impedance $Z_T$ is not influenced by the modulation. For this special case the imaginary part of the impedance during modulation between the values $(+\Delta X_{mod})^2$ and $(-\Delta X_{mod})^2$ is switched. As can be clearly seen, the value of the scatter aperture $\sigma$ remains constant. Equation (4.81), on the other hand, shows that the reflected power $P_S$ is proportional to the square of the current $I$ in the antenna. However, since by switching the imaginary part of the impedances between $-\Delta X_{mod}$ and $+\Delta X_{mod}$ we also change the phase $\theta$ of the current $I$, we can conclude that the phase $\theta$ of the reflected power $P_S$ also changes to the same degree.

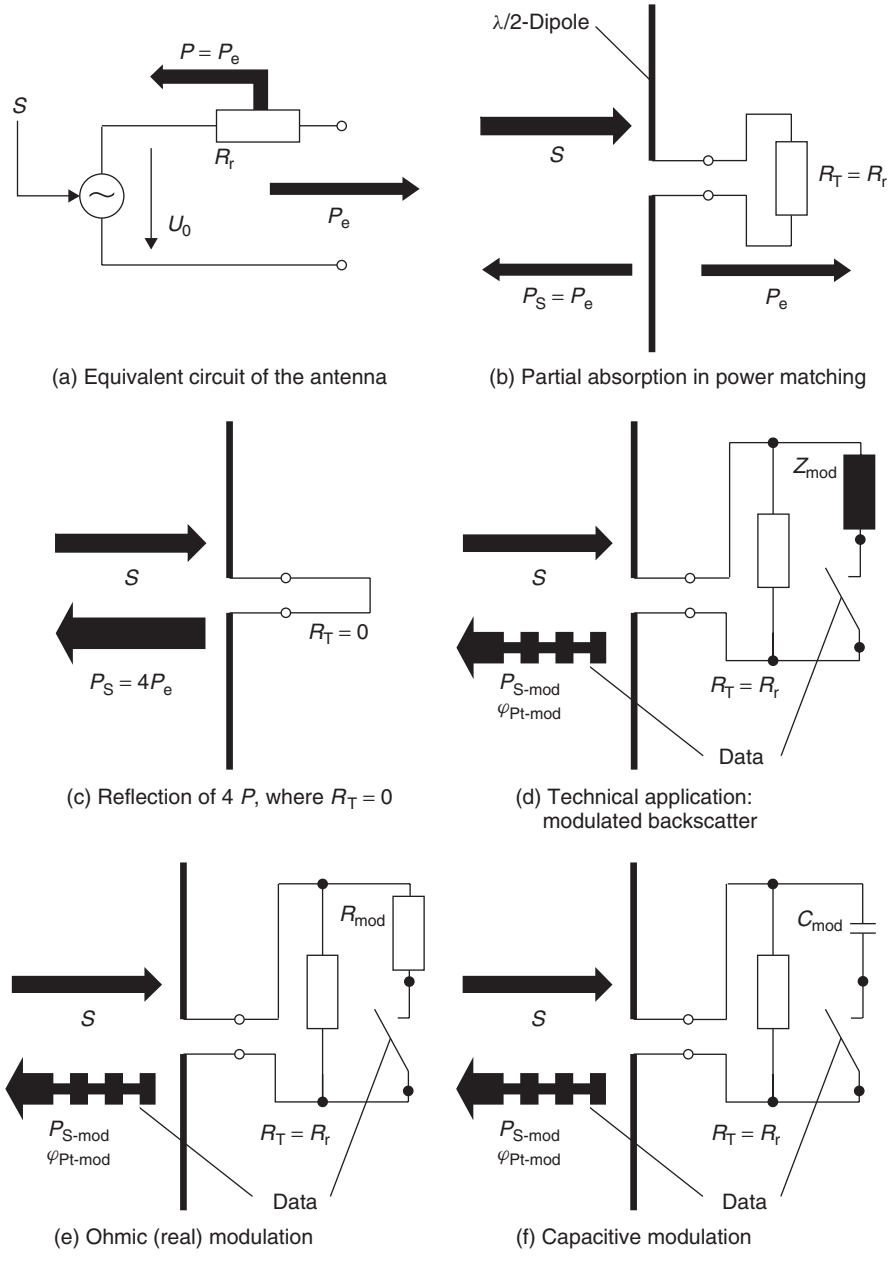


(a) Equivalent circuit of the antenna

(b) Partial absorption in power matching

(c) Reflection of 4 $P$, where $R_T = 0$

(d) Technical application: modulated backscatter

(e) Ohmic (real) modulation

(f) Capacitive modulation

**Figure 4.89** Generation of the modulated backscatter by the modulation of the transponder impedance $Z_T$ $(= R_T)$

To sum up, therefore, we can say that modulating the input impedance $Z_T$ of the transponder results in the modulation of the value and/or phase of the reflected power $P_S$ and thus also of the scatter aperture $\sigma$. $P_S$ and $\sigma$ should thus not be considered as real quantities in RFID systems, but as complex quantities. The relative change in value and phase of the scatter aperture $\sigma$ can be expressed using the following equation (PALOMAR, 18 000):

$$\Delta\sigma = \frac{\lambda_0^2 \cdot G \cdot \Delta Z_{\text{mod}}}{4 \cdot \pi \cdot R_r} \tag{4.108}$$

RFID transponders' property of generating mixed phase and amplitude modulation must also be taken into account in the development of readers. Modern readers thus often operate using $I/Q$ demodulators in order to ensure that the transponder's signal can always be demodulated.

#### 4.2.6.7 Read Range

Two conditions must be fulfilled for a reader to be able to communicate with a transponder.

First, the transponder must be supplied with sufficient power for its activation. We have already discussed the conditions for this in Section 4.2.6.2. Furthermore, the signal reflected by the transponder must still be sufficiently strong when it reaches the reader for it to be able to be detected without errors. The *sensitivity of a receiver* indicates how great the field strength or the induced voltage $U$ must be at the receiver input for a signal to be received without errors. The level of *noise* that travels through the antenna and the primary stage of the receiver input, interfering with signals that are too weak or suppressing them altogether, is decisive for the sensitivity of a receiver.

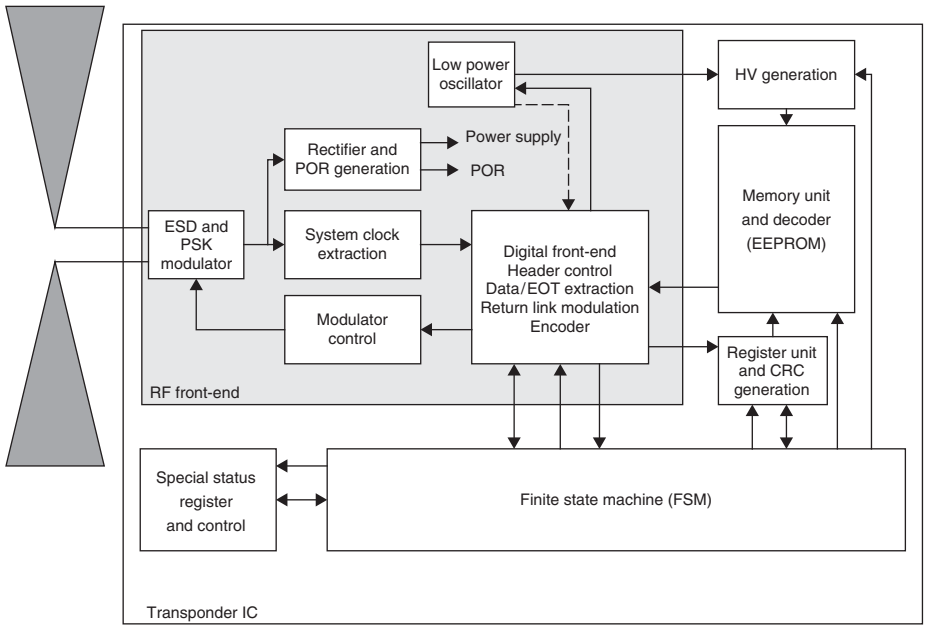


**Figure 4.90** Block diagram of a passive UHF transponder (reproduced by permission of Rafsec, Palomar-Konsortium, PALOMAR Transponder)

In backscatter readers the permanently switched on transmitter, which is required for the activation of the transponder, induces a significant amount of additional noise, thereby drastically reducing the sensitivity of the receiver in the reader. This noise arises largely as a result of *phase noise* of the *oscillator* in the transmitter. As a rule of thumb in practice we can assume that for the transponder to be detected, the transponder's signal may lie no more than 100 dB below the level of the transmitter's carrier signal (GTAG, 2001). In order to make a precise prediction regarding the sensitivity of a reader, however, this value must be established for the individual case by measurement.

For the transmission of data the signal reflected by the transponder is modulated. It should be noted in this connection that, as part of the process of *modulation*, the reflected power $P_S$ is broken down into a reflected 'carrier signal' and two sidebands. In pure ASK modulation with a theoretical modulation index of 100%[6] the two sidebands would each contain 25% of the total reflected power $P_S$ (i.e. $P_3 - 6$ dB), and at a lower modulation index correspondingly less. Since the information is transmitted exclusively in the *sidebands*, a lower wanted signal should be specified according to the modulation index. The reflected carrier contains no information, but cannot be received by the reader since it is completely masked by a transmission signal of the same frequency, as Figure 4.91 shows.

Let us now consider the magnitude of the power $P_3$ arriving at the reader that is reflected by the transponder.

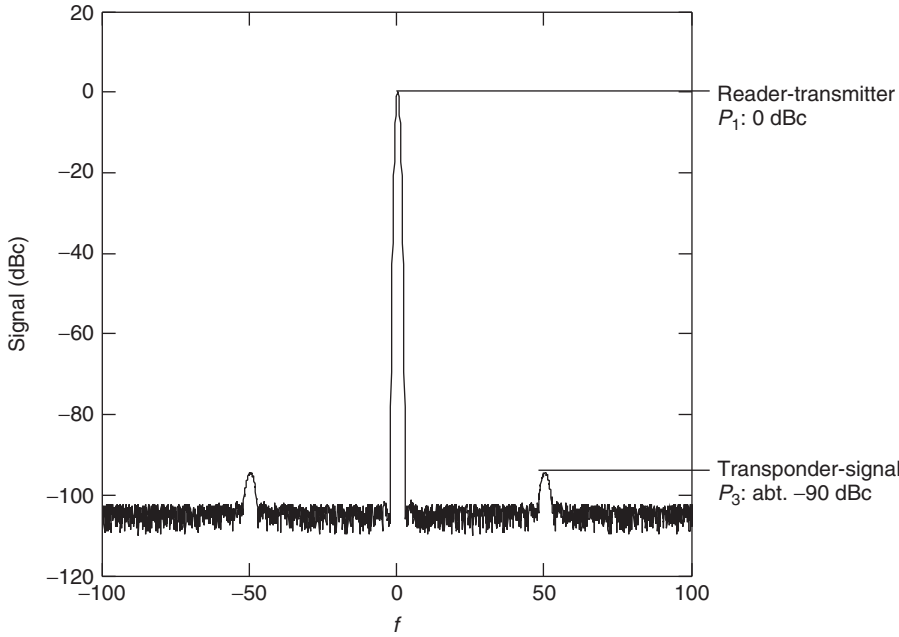


**Figure 4.91** Example of the level relationships in a reader. The noise level at the receiver of the reader lies around 100 dB below the signal of the carrier. The modulation sidebands of the transponder can clearly be seen. The reflected carrier signal cannot be seen, since the level of the carrier signal of the reader's transmitter, which is the same frequency, is higher by orders of magnitude

[6] In practice 100% ASK modulation of the reflected signal cannot be achieved, since $Z_T$ would have to have an infinite value in the modulated state.

As in Equation (4.75) the received power $P_3$ at the receiver of the reader is:

$$P_3 = A_{\text{e·Reader}} \cdot S_{\text{Back}} \tag{4.109}$$

The radiation density $S_{\text{Back}}$ is found from Equation (4.67). We thus obtain:

$$P_3 = A_{\text{e - Reader}} \cdot \frac{P_1 \cdot G_{\text{Reader}} \cdot \sigma}{(4\pi)^2 \cdot r^4} \tag{4.110}$$

We now replace $A_{\text{e-Reader}}$ by the expression in Equation (4.86), since we have already used the gain $G_{\text{Reader}}$ of the reader's antenna in the radar equation:

$$P_3 = \frac{P_1 \cdot G^2_{\text{Reader}} \cdot \lambda_0^2 \cdot \sigma}{(4\pi)^3 \cdot r^4} \tag{4.111}$$

In the same way we replace $A_{\text{s}} = \sigma$ by Equation (4.86), and thus finally obtain:

$$P_3 = \frac{P_1 \cdot G^2_{\text{Reader}} \cdot \lambda_0^4 \cdot G^2_{\text{T}}}{(4\pi r)^4} \tag{4.112}$$

This equation naturally only applies in the case of power matching between the transponder's antenna and the connected consumer $Z_{\text{T}}$. In practical operation the scatter aperture $\sigma$ can take on values between 0 and $4A_{\text{e}}$, as was shown in Section 4.2.5.4. In generalised form the following applies:

$$P_3 = \left.\frac{k \cdot P_1 \cdot G^2_{\text{Reader}} \cdot \lambda_0^4 \cdot G^2_{\text{T}}}{(4\pi r)^4}\right|_{k=0..4} \tag{4.113}$$

The precise value for $k$ is found from the relationship between the radiation resistance of the antenna $R_{\text{r}}$ and the input impedance $Z_{\text{T}}$ of the transponder chip and can be derived from Figure 4.67.

We solve Equation (4.113) with respect to $r$, obtaining:

$$r = \frac{\lambda_0}{4\pi} \cdot \left.\sqrt[4]{\frac{k \cdot P_1 \cdot G^2_{\text{Reader}} \cdot G^2_{\text{T}}}{P_3}}\right|_{k=0..4} \tag{4.114}$$

At known sensitivity of the reader's receiver $P_{3\,\text{min}}$ the maximum distance between transponder and reader at which the transponder's signal can just be received by the reader can thus be calculated (Figure 4.92). The fact that $P_3$ represents the total power reflected by the transponder must be taken into account. The splitting of power $P_3$ into a carrier signal and the two sidebands (i.e. $P_3 = P_{\text{carrier}} + P_{\text{USB}} + P_{\text{LSB}}$)[7] has not yet been taken into account here. In order to be able to detect a single sideband of the reflected, modulated signal, $P_3$ must be correspondingly greater.

[7] USB = upper sideband, i.e. the modulation sideband at the higher frequency position; LSB = lower sideband, i.e. the modulation sideband at the lower frequency position.

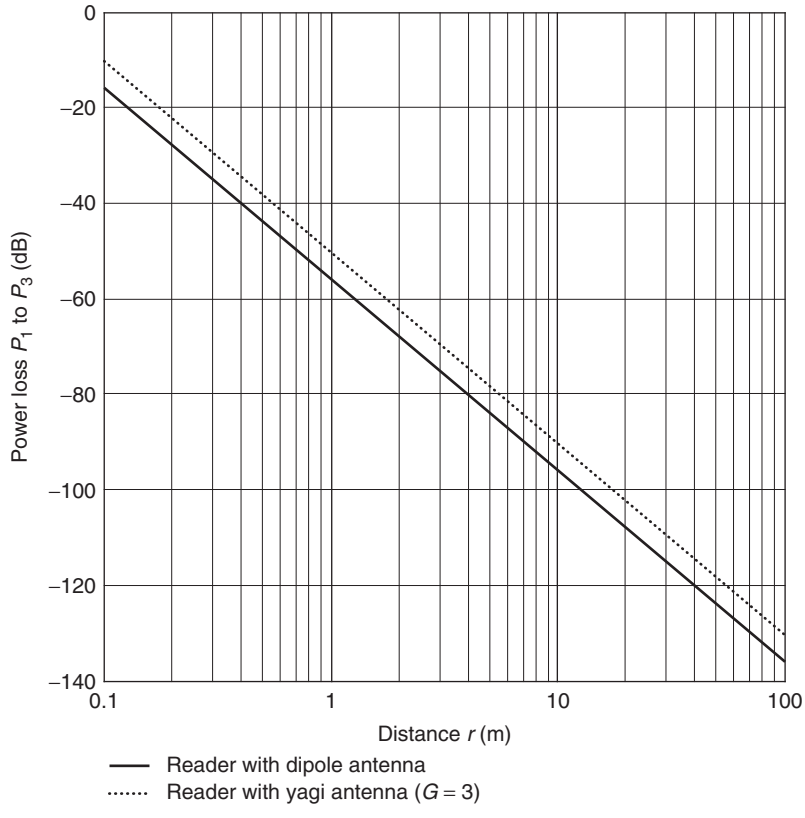


**Figure 4.92** Damping of a signal on the way to and from the transponder

## 4.3 Surface Waves

### *4.3.1 The Creation of a Surface Wave*

If a voltage is applied to the electrodes of a *piezoelectric crystal* such as *quartz* ($SiO_2$), *lithium niobate* ($LiNbO_3$) or *lithium tantalate* ($LiTaO_3$), mechanical distortions arise in the *crystal lattice* as a result of the *piezo effect*. This effect is used to generate *surface acoustic waves* on the crystal. To achieve this, electrode structures made of approximately 0.1-μm-thick aluminium are applied to the polished surface of a piezoelectric single crystal in the form of an electroacoustic converter. When an alternating voltage is applied to the electroacoustic converter, surface acoustic waves – so-called *Rayleigh waves* – propagate on the surface of the crystal (Meinke and Gundlach, 1992). The deflections in the crystal lattice decrease exponentially as the depth increases.

The majority of the induced acoustic power is thus concentrated within a thin layer with a depth of approximately one wavelength $\lambda$ on the surface of the crystal. The propagation of a surface acoustic wave on the highly polished surface of a substrate is almost undamped and dispersion free. The propagation speed $v$ is approximately 3000 to 4000 m/s, i.e. only around 1/100 000 of the speed of light $c$.

Interdigital electrode structures in the form of interleaved fingers make effective electroacoustic transducers. Each pair of such interleaved fingers (Figure 4.93) form a so-called *interdigital transducer* (Latin *digitus* = finger, *inter* = between). A $\delta$-shaped (sharp spike) electrical pulse applied to the busbar of an interdigital transducer results in a mechanical deformation at the surface of the substrate between fingers of different polarity due to the piezoelectric effect. This deformation is proportional to the electric field and propagates as a surface wave in both directions at velocity $v$ (Figure 4.94). Conversely, a surface wave entering the converter generates a signal proportional to the finger structure at the busbar as a result of the piezoelectric effect (Meinke and Gundlach, 1992).

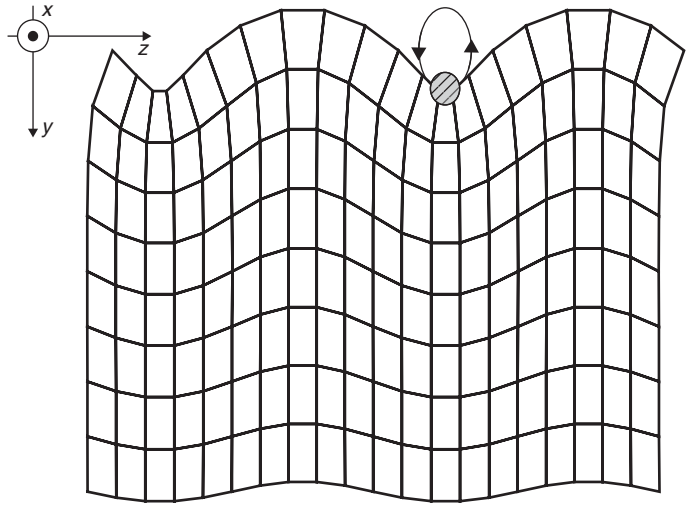


**Figure 4.93** The section through a crystal shows the surface distortions of a surface wave propagating in the $z$ direction (reproduced by permission of Siemens AG, ZT KM, Munich)

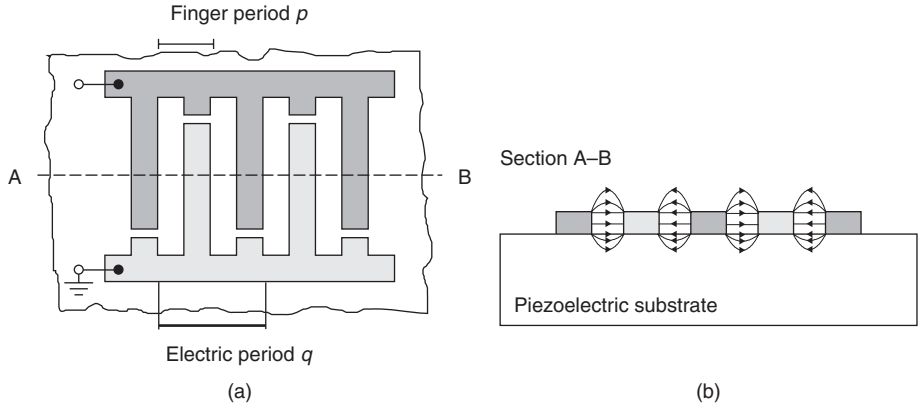


**Figure 4.94** Principal structure of an interdigital transducer. Left, arrangement of the finger-shaped electrodes of an interdigital transducer; right, the creation of an electric field between electrodes of different polarity (reproduced by permission of Siemens AG, ZT KM, Munich)

The distance between two fingers of the same polarity is termed the electrical period $q$ of the interdigital transducer. The maximum electroacoustic interaction is obtained at the frequency $f_0$, the mid-frequency of the transducer. At this frequency the wavelength $\lambda_0$ of the surface acoustic wave precisely corresponds with the electrical period $q$ of the interdigital transducer, so that all wave trains are superimposed in-phase and transmission is maximized (Reindl and Mágori, 1995).

$$\frac{v}{f_0} = \lambda_0 = q \tag{4.115}$$

The relationship between the electrical and mechanical power density of a surface wave is described by the material-dependent piezoelectric coupling coefficient $k^2$. Around $k^{-2}$ overlaps of the transducer are required to convert the entire electrical power applied to the interdigital transducer into the acoustic power of a surface wave.

The bandwidth $B$ of a transducer can be influenced by the length of the converter and is:

$$B = 2f_0/N (N = \text{number of fingers}) \tag{4.116}$$

## 4.3.2 Reflection of a Surface Wave

If a surface wave meets a mechanical or electrical discontinuity on the surface a small part of the surface wave is reflected. The transition between free and metallised surface represents such a discontinuity, therefore a periodic arrangement of $N$ reflector strips can be used as a reflector. If the reflector period $p$ (see Figure 4.95) is equal to half a wavelength $\lambda_0$, then all reflections are superimposed in phase. The degree of reflection thus reaches its maximum value for the associated frequency, the so-called Bragg frequency $f_B$ (Figure 4.96).

$$f_B = \frac{v}{2p} \tag{4.117}$$

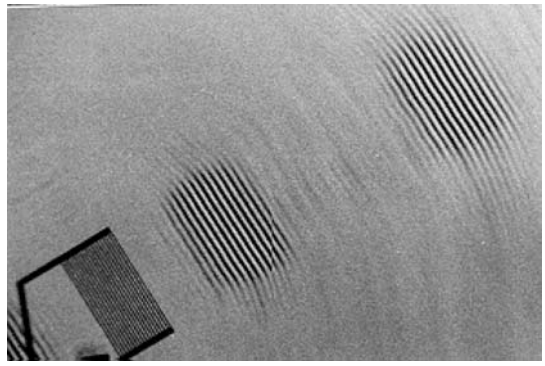

**Figure 4.95** Scanning electron microscope photograph of several surface wave packets on a piezoelectric crystal. The interdigital transducer itself can be seen to the bottom left of the picture. An electric alternating voltage at the electrodes of the interdigital transducer generates a surface wave in the crystal lattice as a result of the piezoelectric effect. Conversely, an incoming surface wave generates an electric alternating voltage of the same frequency at the electrodes of the transducer (reproduced by permission of Siemens AG, ZT KM, Munich)

**Figure 4.96** Geometry of a simple reflector for surface waves (reproduced by permission of Siemens AG, ZT KM, Munich)

### *4.3.3 Functional Diagram of SAW Transponders*

A surface wave transponder is created by the combination of an interdigital transducer and several reflectors on a piezoelectric monocrystal, with the two busbars of the interdigital transducer being connected by a (dipole) antenna.

A high-frequency *interrogation pulse* is emitted by the antenna of a reader at periodic intervals. If a surface wave transponder is located in the interrogation zone of the reader part of the power emitted is received by the transponder's antenna and travels to the terminals of the interdigital converter in the form of a high-frequency voltage pulse. The interdigital transducer converts part of this received power into a surface acoustic wave, which propagates in the crystal at right angles to the fingers of the transducer.[8]

*Reflectors* are now applied to the crystal in a characteristic sequence along the propagation path of the surface wave. At each of the reflectors a small part of the surface wave is reflected and runs back along the crystal in the direction of the interdigital transducer. Thus a number of pulses are generated from a single interrogation pulse. In the interdigital transducer the incoming acoustic

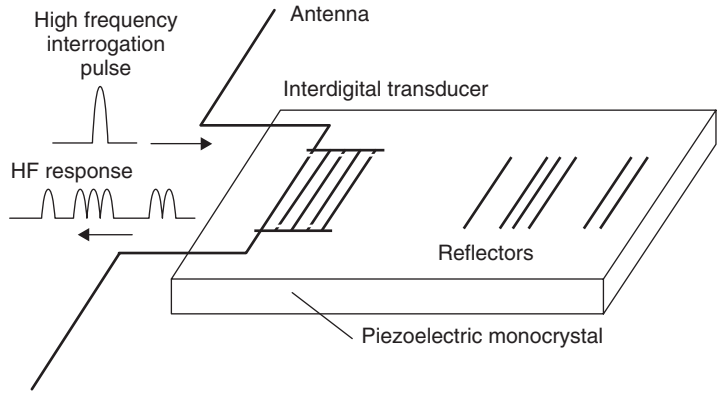


**Figure 4.97** Functional diagram of a surface wave transponder (reproduced by permission of Siemens AG, ZT KM, Munich)

[8] To convert as much of the received power as possible into acoustic power, first the transmission frequency $f_0$ of the reader should correspond with the mid-frequency of the interdigital converter. Secondly, however, the number of transducer fingers should be matched to the coupling coefficient $k_2$.

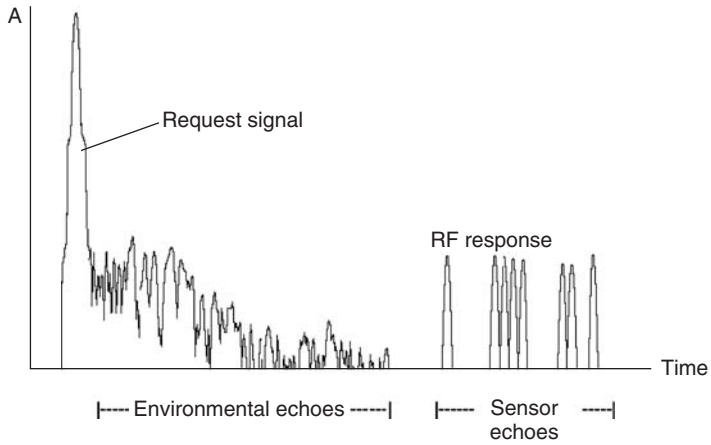


**Figure 4.98** Sensor echoes from the surface wave transponder do not arrive until environmental echoes have decayed (reproduced by permission of Siemens AG, ZT KM, Munich)

pulses are converted back into high-frequency voltage pulses and are emitted from the antenna of the transponder as the transponder's response signal. Due to the low propagation speed of the surface wave the first response pulses arrive at the reader after a delay of a few microseconds. After this time delay the *interference reflections* from the vicinity of the reader have long since decayed and can no longer interfere with the transponder's response pulse. Interference reflections from a radius of 100 m around the reader have decayed after around 0.66 µs (propagation time for $2 \times 100$ m). A surface wave on a quartz substrate ($v = 3158$ m/s) covers 2 mm in this time and thus just reaches the first reflectors on the substrate. This type of surface wave transponder is therefore also known as 'reflective delay lines'.

Surface wave transponders are completely linear and thus respond with a defined phase in relation to the interrogation pulse (see Figure 4.99). Furthermore, the phase angle $\phi_{2-1}$ and the differential

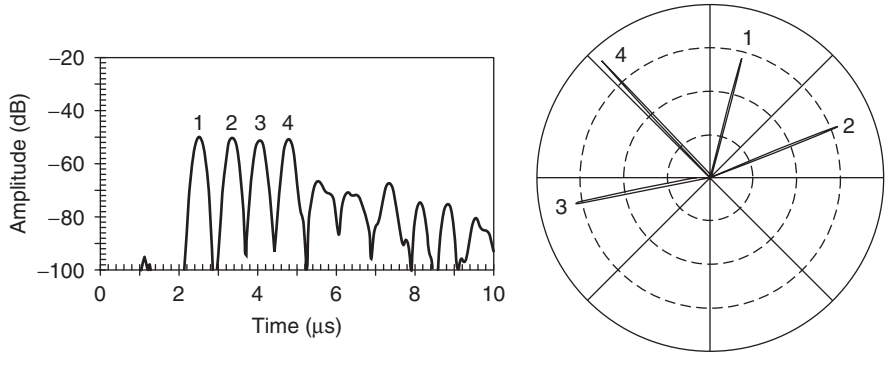


**Figure 4.99** Surface wave transponders operate at a defined phase in relation to the interrogation pulse. Left, interrogation pulse, consisting of four individual pulses; right, the phase position of the response pulse, shown in a clockface diagram, is precisely defined (reproduced by permission of Siemens AG, ZT KM, Munich)

**Table 4.9** System parameters for the range calculation shown in Figure 4.98

| Value | At 433 MHz | | At 2.45 GHz |
|---|---|---|---|
| $P_S$ transmission power | | +14 dB m | |
| $G_T$ gain of transmission antenna | | 0 dB | |
| $G_R$ gain of transponder antenna | −3 dBl | | 0 dBl |
| Wavelength $\lambda$ | 70 cm | | 12 cm |
| $F$ noise number of the receiver (reader) | | 12 dB | |
| $S/Nr$ required signal/noise distance for error-free data detection | | 20 dB | |
| IL insertion loss; this is the additional damping of the electromagnetic response signal on the return path in the form of a surface wave | 35 dB | | 40 dB |
| $T_0$ noise temperature of the receiving antenna | | 300 K | |

propagation time $\tau_{2-1}$ between the reflected individual signals is constant. This gives rise to the possibility of improving the *range* of a surface wave transponder by taking the mean of weak transponder response signals from many interrogation pulses. Since a read operation requires only a few microseconds, several hundreds of thousands of read cycles can be performed per second.

The range of a surface wave transponder system can be determined using the radar equation (see Section 4.2.4.1). The influence of coherent averaging is taken into account as 'integration time' $t_I$ (Reindl *et al*., 1998a).

$$d = \sqrt[4]{\frac{P_T \cdot G_T^2 \cdot G_R^2 \cdot t_i \cdot \lambda^4}{k \cdot T_0 \cdot F \cdot \frac{S}{N} \cdot IL}} \tag{4.118}$$

The relationship between the number of read cycles and the range of the system is shown in Figure 4.99 for two different frequency ranges. The calculation is based upon the system parameters listed in Table 4.9, which are typical of surface wave systems.

## 4.3.4 The Sensor Effect

The velocity $v$ of a surface wave on the substrate, and thus also the propagation time $\tau$ and the mid-frequency $f_0$ of a surface wave component, can be influenced by a range of physical variables (Reindl and Mágori, 1995). In addition to temperature, mechanical forces such as static elongation, compression, shear, bending and acceleration have a particular influence upon the surface wave velocity $v$. This facilitates the remote interrogation of mechanical forces by surface wave sensors (Reindl and Mágori, 1995).

In general, the sensitivity $S$ of the quantity $x$ to a variation of the influence quantity $y$ can be defined as:

$$S_y^x = \frac{1}{x} \cdot \frac{\partial x}{\partial y} \tag{4.119}$$

The sensitivity $S$ to a certain influence quantity $y$ is dependent here upon substrate material and crystal section. For example, the influence of temperature $T$ upon propagation speed $v$ for a surface wave on quartz is zero. Surface wave transponders are therefore particularly temperature stable on this material. On other substrate materials the propagation speed $v$ varies with the temperature $T$.

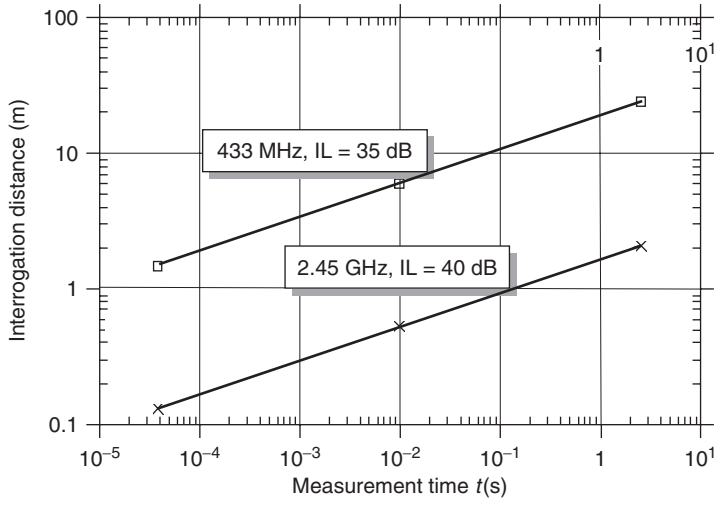


**Figure 4.100** Calculation of the system range of a surface wave transponder system in relation to the integration time $t_i$ at different frequencies (reproduced by permission of Siemens AG, ZT KM, Munich)

**Table 4.10** The properties of some common surface wave substrate materials

| Material | Crystal direction | | $V$ | $k^2$ | $S_T^v$ ($Tk$) | Damping (dB/µs) | |
|---|---|---|---|---|---|---|---|
| | Section* | Prop** | (m/s) | (%) | (ppm/°C) | 433 MHz | 2.45 GHz |
| Quartz | ST | $X$ | 3158 | 0.1 | 0 | 0.75 | 18.6 |
| Quartz | 37° rot-$Y$ | 90° rot-$X$ | 5092 | = 0.1 | 00 | ③ | ③ |
| $LiNbO_3$ | $Y$ | $Z$ | 3488 | 4.1 | 94 | 0.25 | 5.8 |
| $LiNbO_3$ | 128° rot-$Y$ | $X$ | 3980 | 5.5 | 75 | 0.27 | 5.2 |
| $LiTaO_3$ | 36° rot-$Y$ | $X$ | 4112 | = 6.6 | 30 | 1.35③ | 20.9③ |
| $LiTaO_3$ | $X$ | 112° rot-$Y$ | 3301 | 0.88 | 18 | – | – |

*Section – surface normal to crystal axis
**Crystal axis of the wave propagation
③Strong dependency of the value on the layer thickness

The temperature dependency is described by the sensitivity $S_T^v$ (also called the temperature coefficient $Tk$). The influence of temperature on the propagation speed $v$, the mid-frequency $f_0$ and the propagation time $\tau$ can be calculated as follows (Reindl and Mágori, 1995):

$$v(T) = v(T_0) \cdot [1 - S_T^v \cdot (T - T_0)] \tag{4.120}$$

$$f_0(T) = f_0(T_0) \cdot [1 - S_T^v \cdot (T - T_0)] \tag{4.121}$$

$$\tau(T) = \tau(T_0) \cdot [1 + S_T^v \cdot (T - T_0)] \tag{4.122}$$

#### 4.3.4.1 Reflective Delay Lines

If only the differential propagation times or the differential phases between the individual reflected pulses are evaluated, the sensor signal is independent of the distance between the reader and the

transponder. The differential propagation time $\tau_{2-1}$, and the differential phase $\theta_{2-1}$ between two received response pulses is obtained from the distance $L_{2-1}$ between the two reflectors, the velocity $v$ of the surface wave and the frequency $f$ of the interrogation pulse.

$$\tau_{2-1} = \frac{2 \cdot L_{2-1}}{v} \tag{4.123}$$

$$\varphi_{2-1} = 2\pi f \cdot \tau_{2-1} = \frac{4\pi f \cdot L_{2-1}}{v} \tag{4.124}$$

The measurable change $\Delta\tau_{2-1}$ or $\Delta\theta_{2-1}$ when a physical quantity $y$ is changed by the amount $\Delta y$ is thus:

$$\Delta\tau_{2-1} = \tau_{2-1} \cdot S_{\mathrm{y}}^{\tau} \cdot \Delta y \tag{4.125}$$

$$\Delta\varphi_{2-1} = 2\pi f \cdot \tau_{2-1} \cdot S_{\mathrm{y}}^{\tau} \cdot \Delta y \tag{4.126}$$

The influence of the physical quantity $y$ on the surface wave transponder can thus be determined only by the evaluation of the phase difference between the different pulses of the response signal. The measurement result is therefore also independent of the distance between reader and transponder.

For lithium niobate ($LiNbO_3$, YZ section), the linear temperature coefficient $T_{\mathrm{k}} = S_{\mathrm{T}}^{\mathrm{v}}$ is approximately 90 ppm/ °C. A reflective delay line on this crystal is thus a sensitive *temperature sensor* that can be interrogated by radio. Figure 4.101 shows the example of the pulse response of a temperature sensor and the temperature dependency of the associated phase values (Reindl *et al*., 1998c). The precision of a temperature measurement based upon the evaluation of the associated phase value $\theta_{2-1}$ is approximately $\pm 0.1$ °C and this precision can even be increased by special measures such as the use of longer propagation paths $L_{2-1}$ (see Equation 4.124) in the crystal. The unambiguity of the phase measurement can be assured over the entire measuring range by three or four correctly positioned reflectors.

#### 4.3.4.2 Resonant Sensors

In a reflective delay line the available path is used twice. However, if the interdigital transducer is positioned between two fully reflective structures, then the acoustic path can be used a much greater number of times due to multiple reflection. Such an arrangement (see Figure 4.101) is called a surface wave *one-port resonator*. The distance between the two reflectors must be an integer multiple of the half-wavelength $\lambda_0$ at the resonant frequency $f_1$.

The number of wave trains stored in such a *resonator* will be determined by its loaded $Q$ factor. Normally a *Q factor* of 10 000 is achieved at 434 MHz and at 2.45 GHz a $Q$ factor of between 1500 and 3000 is reached (Reindl *et al*., 1998b). The displacement of the mid-frequency $\Delta f_1$ and the displacement of the associated phase $\Delta\theta_1$ of a resonator due to a change of the physical quantity $y$ with the loaded Q factor are (Reindl *et al*., 1998a):

$$\Delta f_1 = -f_1(y_0) \cdot S_{\mathrm{y},1} \cdot \Delta y \tag{4.127}$$

and

$$\Delta\varphi = 2\mathrm{Q} \cdot \frac{\Delta f}{f} \tag{4.128}$$

where $f_1$ is the unaffected resonant frequency of the resonator.

In practice, the same sensitivity is obtained as for a reflective delay line, but with a significant reduction in chip size (Reindl *et al*., 1998c).

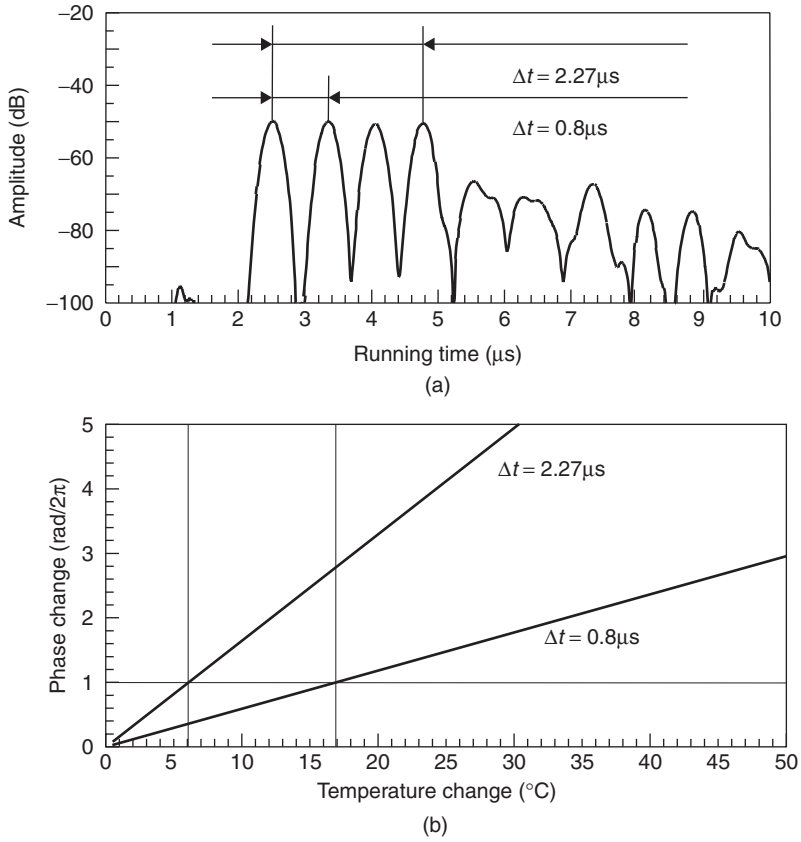


**Figure 4.101** Impulse response of a temperature sensor and variation of the associated phase values between two pulses ($\Delta\tau = 0.8\,\mu s$) or four pulses ($\Delta\tau = 2.27\,\mu s$). The high degree of linearity of the measurement is striking (reproduced by permission of Siemens AG, ZT KM, Munich)

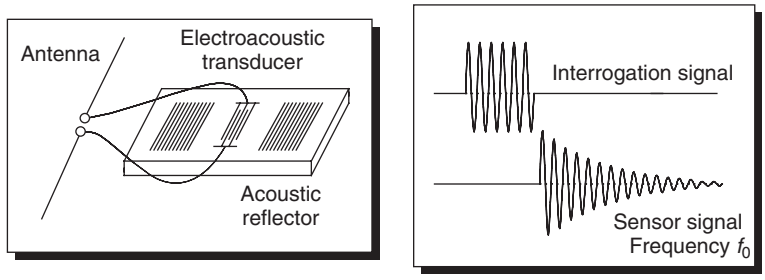


**Figure 4.102** Principal layout of a resonant surface wave transponder and the associated pulse response (reproduced by permission of Siemens AG, ZT KM, Munich)

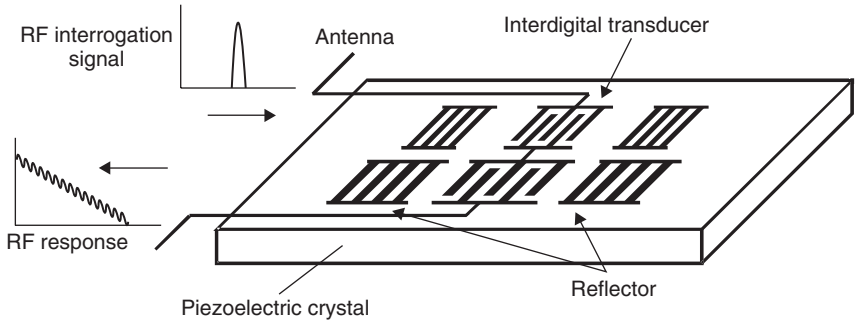


**Figure 4.103** Principal layout of a surface wave transponder with two resonators of different frequency ($f_1$, $f_2$) (reproduced by permission of Siemens AG, ZT KM, Munich)

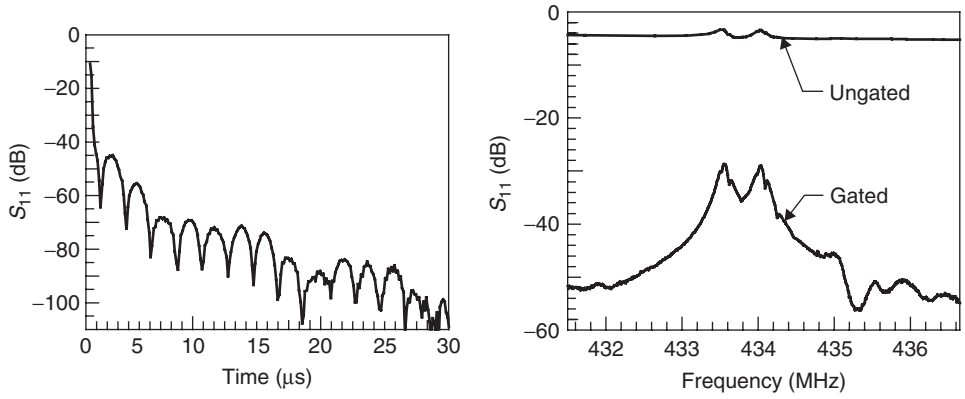


**Figure 4.104** Left, measured impulse response of a surface wave transponder with two resonators of different frequency; right, after the Fourier transformation of the impulse response the different resonant frequencies of the two resonators are visible in the line spectrum, here: approximately 433.5 and 434 MHz (reproduced by permission of Siemens AG, ZT KM, Munich)

If, instead of one resonator, several resonators with different frequencies are placed on a crystal (Figure 4.103), then the situation is different: instead of a pulse sequence in the time domain, such an arrangement emits a characteristic line spectrum back to the interrogation device (Reindl *et al*., 1998c, d) which can be obtained from the received sensor signal by a Fourier transformation.

The difference $\Delta f_{2-1}$ between the resonant frequencies of the two resonators is determined to measure a physical quantity $y$ in a surface wave transponder with two resonators. Similarly to Equation (4.127), this yields the following relationship (Reindl *et al*., 1998c).

$$\Delta f_{2-1} = -[f_2(y_0) \cdot S_{y,2} - f_1(y_0) \cdot S_{y,1}] \cdot \Delta y \tag{4.129}$$

#### 4.3.4.3 Impedance Sensors

Using surface wave transponders, even conventional sensors can be passively interrogated by radio if the impedance of the sensor changes as a result of the change of a physical quantity $y$ (e.g.

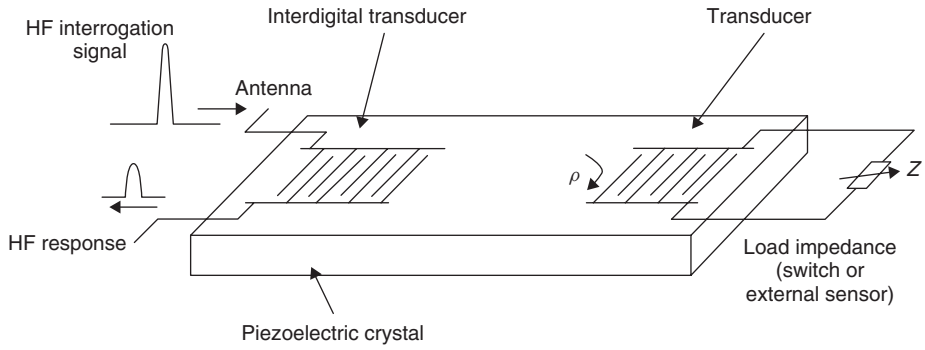


**Figure 4.105** Principal layout of a passive surface wave transponder connected to an external sensor (reproduced by permission of Siemens AG, ZT KM, Munich)

photoresistor, Hall sensor, NTC or PTC resistor). To achieve this a second interdigital transducer is used as a reflector and connected to the external sensor (Figure 4.105). A measured quantity $\Delta y$ thus changes the terminating impedance of the additional interdigital transducer. This changes the acoustic transmission and reflection $\rho$ of the converter that is connected to this load, and thus also changes the magnitude and phase of the reflected RF pulse, which can be detected by the reader.

## *4.3.5 Switched Sensors*

Surface wave transponders can also be passively recoded (Figure 4.106). As is the case for an impedance sensor, a second interdigital transducer is used as a reflector. External circuit elements of the interdigital transducer's busbar make it possible to switch between the states 'short-circuited' and 'open'. This significantly changes the acoustic transmission and reflection $\rho$ of the transducer and thus also the magnitude and phase of the reflected RF impulse that can be detected by the reader.

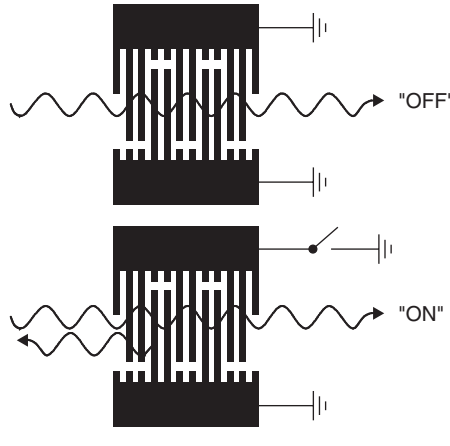


**Figure 4.106** Passive recoding of a surface wave transponder by a switched interdigital transducer (reproduced by permission of Siemens AG, ZT KM, Munich)

# 5

# Frequency Ranges and Radio Licensing Regulations

## 5.1 Frequency Ranges Used

Because RFID systems generate and radiate electromagnetic waves, they are legally classified as *radio systems*. The function of other *radio services* must under no circumstances be disrupted or impaired by the operation of RFID systems. It is particularly important to ensure that RFID systems do not interfere with nearby radio and television, mobile radio services (police, security services, industry), marine and aeronautical radio services and mobile telephones.

The need to exercise care with regard to other radio services significantly restricts the range of suitable operating frequencies available to an RFID system. During the RFID technology's early days only internationally available *ISM frequencies* and the frequency range below 135 kHz could be used due to the nonassignment of separate frequencies. ISM stands for 'Industrial Scientific and Medical', i.e. for industrial, scientific and medical high-frequency applications. ISM frequencies are internationally reserved for applications using high-frequency devices. Examples are electrical discharge machines, microwave ovens or medical short-wave radiotherapy.

In addition to these applications, ISM frequencies can also be used for radio transmission. Due to the interference radiation inevitably caused by 'actual' ISM application, ISM frequencies of radio applications close to high-frequency devices are prone to interference. In our modern communication society, radio frequencies are a valuable commodity which should be used efficiently. Therefore it appeared sensible to reserve ISM frequencies for radio applications that are able to temporarily tolerate interferences and that have to bridge only short distances. The original idea was that anyone, including RFID applications, could use radio devices – without any costs and separate frequency allocation – on ISM frequencies (Bundesnetzagentur, n.d.). Today, ISM frequency bands are used by innumerable low-price radio installations (e.g. the 27 MHz, 433 MHz and 2.45 GHz range). It should always be taken into account that for a generous frequency usage it is not possible to ensure protection against interference.

Two classical ISM frequencies – 13.56 MHz and 2.45 GHz – are still used intensely for RFID systems today. Probably, the worldwide availability of these ISM frequencies and the possibility to use transponders and readers internationally without modifications in many countries has decisively contributed to the international triumph of RFID systems.

*RFID Handbook: Fundamentals and Applications in Contactless Smart Cards, Radio Frequency Identification and Near-Field Communication, Third Edition.* Klaus Finkenzeller
© 2010 John Wiley & Sons, Ltd

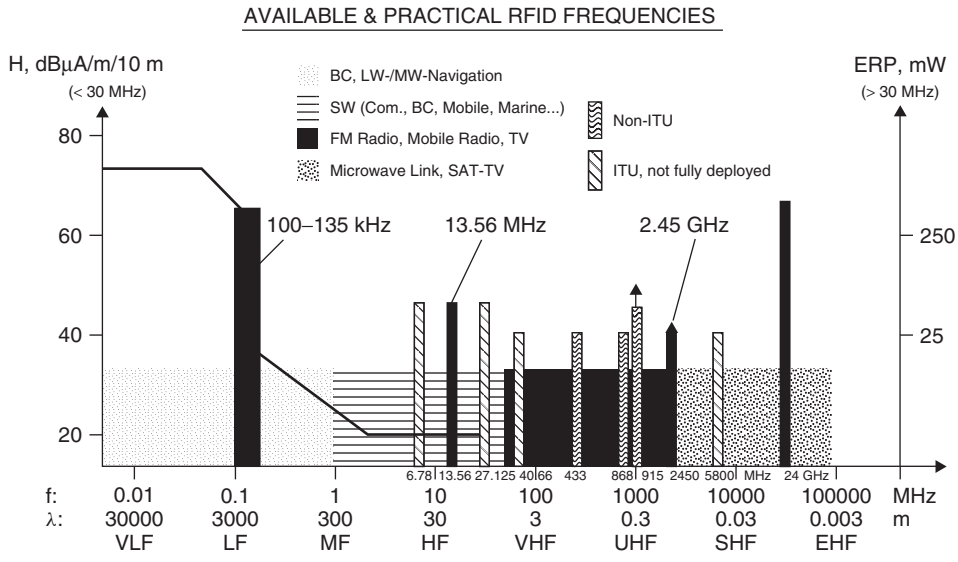


**Figure 5.1** The frequency ranges available for RFID systems range from the myriametric range below 135 kHz, through short wave and ultrashort wave to the microwave range, with the highest frequency being 24 GHz. In the frequency range above 135 kHz the ISM bands available worldwide are preferred

Due to the growing commercial importance of RFID systems and the increasingly liberal frequency regulation in Europe and other regions, from around the year 2000, new frequency ranges for RFID systems have been created or the conditions for existing (ISM) frequencies have been improved. Thus, in Europe the frequency range between 865 and 868 MHz has been reserved for UHF backscatter systems. RFID systems with a field strength of up to 60 dB μA/m, measured at a distance of 10 m, can be operated on the classical ISM frequency 13.56 MHz. Other applications may only use 42 dB μA/m on this frequency. RFID systems are not generally classified as ISM applications any longer, but are treated in Europe as a separate application of short-range devices (SRD).

Short-range devices are versatile devices for professional and private use, such as model remote controls, garage door openers, central locking systems, outdoor thermometers, motion detectors, avalanche transceivers, low-capacity radio devices for medical implants, article surveillance, Bluetooth, vehicle identification for rail vehicles, traffic telematics and distance warning devices, radio motion sensors, alarm radio installations, inductive radio applications, wireless microphones, RFID systems, WLAN and many more.

The use of short-range device provides several advantages for the user: SRD frequencies are allocated for general public usage. This means that SRD use has neither to be registered nor authorized and no costs are associated to the use of these frequencies (Bundesnetzagentur, n.d.). Finally, SRD can be used in several European countries under the same conditions (see also Section 5.3.1).

In addition to ISM and SRD frequencies, the entire *frequency range* below 135 kHz (in North and South America and Japan < 400 kHz) is also suitable, because it is possible to work with high magnetic field strengths in this range, particularly when operating inductively coupled RFID systems.

The most important frequency ranges for RFID systems are therefore 0–135 kHz, the classical ISM frequencies around 6.78 MHz, 13.56 MHz, 27.125 MHz, 40.68 MHz, 869.0 MHz, 2.45 GHz, 5.8 GHz and 24.125 GHz as well as the European SRD frequencies between 865 and 868 MHz (915 MHz in the US).

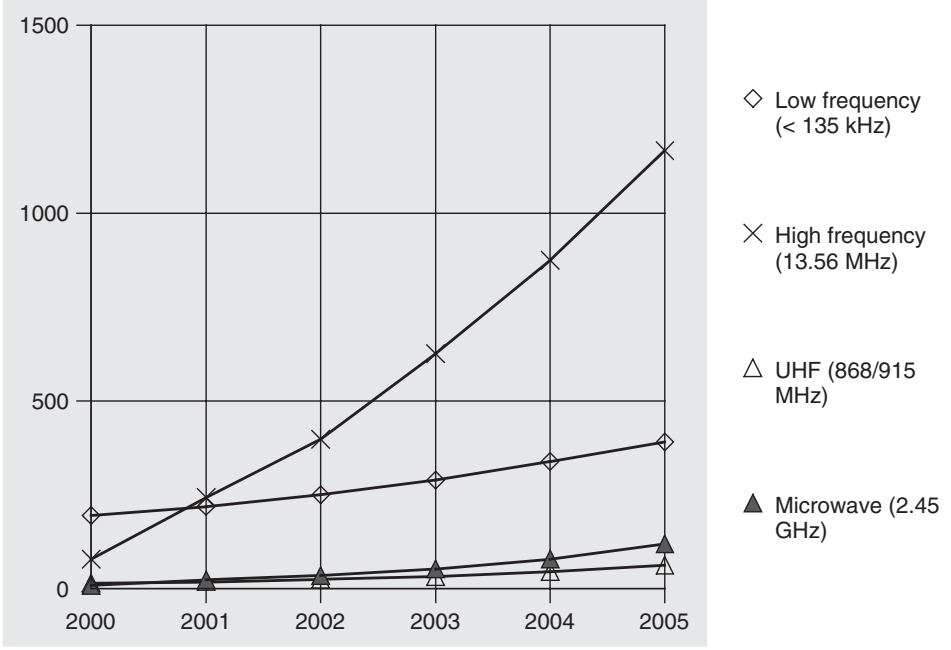


**Figure 5.2** The estimated distribution of the global market for transponders over the various frequency ranges, in million transponder units (Krebs, n.d.)

An overview of the estimated distribution of RFID transponders at the various *frequencies* is shown in Figure 5.2.

### *5.1.1 Frequency Range 9–135 kHz*

The range below 135 kHz is heavily used by other radio services. The propagation conditions in this *long-wave* frequency range permit the radio services that occupy this range to reach areas within a radius of over 1000 km continuously at a low technical cost. Typical radio services in this frequency range are aeronautical and marine navigational radio services (LORAN C, OMEGA, DECCA), time signal services, and standard frequency services, plus military radio services. Thus, in central Europe the time signal transmitter DCF 77 in Mainflingen can be found at around the frequency 77.5 kHz. An RFID system operating at this frequency would therefore cause the failure of all radio clocks within a radius of several hundred metres around a reader.

In order to prevent such collisions, the licensing regulations have defined several protected zones, e.g. between 70 and 119 kHz, with low field strengths which makes this range unattractive to RFID systems.

Wire-bound carrier systems also operate at the frequencies 100, 115 and 130. These include, for example, intercom systems that use the 220 V supply main as a transmission medium. The radio services permitted to operate in Germany within this frequency range are shown in Table 5.2. The actual frequency allocation, particularly in the range 119–135 kHz, has fallen sharply. For example, the German weather service (DWD) changed the frequency of its weather fax transmissions to 134.2 kHz as early as mid-1996.

**Table 5.1** German radio services in the frequency range 9–135 kHz

| *f* (kHz) | Class | Location | Call |
|---|---|---|---|
| 16.4 | FX | Mainflingen | DMA |
| 18.5 | FX | Burlage | DHO35 |
| 23.4 | FX | Mainflingen | DMB |
| 28.0 | FC | Burlage | DHO36 |
| 36.0 | FC | Burlage | DHO37 |
| 46.2 | FX | Mainflingen | DCF46 |
| 47.4 | FC | Cuxhafen | DHJ54 |
| 53.0 | FX | Mainflingen | DCF53 |
| 55.2 | FX | Mainflingen | DCF55 |
| 69.7 | FX | Königswusterhausen | DKQ |
| 71.4 | AL | Coburg | – |
| 74.5 | FX | Königswusterhausen | DKQ2 |
| 77.5 | Time | Mainflingen | DCF77 |
| 85.7 | AL | Brilon | – |
| 87.3 | FX | Bonn | DEA |
| 87.6 | FX | Mainflingen | DCF87 |
| 94.5 | FX | Königswusterhausen | DKQ3 |
| 97.1 | FX | Mainflingen | DCF97 |
| 99.7 | FX | Königswusterhausen | DIU |
| 100.0 | NL | Westerland | – |
| 103.4 | FX | Mainflingen | DCF23 |
| 105.0 | FX | Königswusterhausen | DKQ4 |
| 106.2 | FX | Mainflingen | DCF26 |
| 110.5 | FX | Bad Vilbel | DCF30 |
| 114.3 | AL | Stadtkyll | – |
| 117.4 | FX | Mainflingen | DCF37 |
| 117.5 | FX | Königswusterhausen | DKQ5 |
| 122.5 | DGPS | Mainflingen | DCF42 |
| 125.0 | FX | Mainflingen | DCF45 |
| 126.7 | AL | Portens, LORAN-C, coastal navigation | – |
| 128.6 | AL | Zeven, DECCA, coastal navigation | – |
| 129.1 | FX | Mainflingen, EVU remote control transmitter | DCF49 |
| 131.0 | FC | Kiel (military) | DHJ57 |
| 131.4 | FX | Kiel (military) | DHJ57 |

Abbreviations: AL air navigation radio service, FC mobile marine radio service, FX fixed aeronautical radio service, MS mobile marine radio service, NL marine navigation radio service, DGPS Differential Global Positioning System (correction data), Time signal transmitter for 'radio clocks'.

### *5.1.2 Frequency Range 6.78 MHz (ISM)*

The range 6.765–6.795 MHz belongs to the *shortwave frequencies*. The propagation conditions in this frequency range only permit short ranges of up to a few 100 km in the daytime. During the night-time hours, transcontinental propagation is possible. This frequency range is used by a wide range of radio services, for example broadcasting, weather and aeronautical radio services and press agencies.

This range has been designated an ISM band by the international ITU and is being used in individual cases by RFID systems. CEPT/ERC and ETSI designate this range as a harmonised frequency in the CEPT/ERC 70–03 regulation (see Section 5.3.1).

**Table 5.2** Short- range device applications from REC 70-03 (Source: BAPT 1997)

| Annex | Application |
|---|---|
| Annex 1 | Nonspecific short-range devices |
| Annex 2 | Devices for detecting avalanche victims |
| Annex 3 | Wideband data transmission systems |
| Annex 4 | Railway applications |
| Annex 5 | Road transport and traffic telematics (RTTT) |
| Annex 6 | Equipment for detecting movement and equipment for alert |
| Annex 7 | Alarms |
| Annex 8 | Model control |
| Annex 9 | Inductive applications |
| Annex 10 | Radio microphones |
| Annex 11 | RFID |
| Annex 12 | Wireless applications in healthcare |
| Annex 13 | Wireless audio applications |

REC 70-03 also refers to the harmonised ETSI standards (e.g. EN 300 330), which contain measurement and testing guidelines for the licensing of radio devices.

### *5.1.3 Frequency Range 13.56 MHz (ISM, SRD)*

The range 13.553–13.567 MHz is located in the middle of the short-wavelength range. The propagation conditions in this frequency range permit (due to powerful shortwave transmitters) transcontinental connections throughout the day. This frequency range is used by a wide variety of radio services (Siebel, 1983), for example press agencies and telecommunications (PTP).

This range has been designated an ISM band by the international ITU. In directive CEPT/ERC REC 70-03, CEPT/ERC and ETSI designate this range as a harmonised frequency. Other ISM applications that operate in this frequency range are remote control systems, remote controlled models, demonstration radio equipment and pagers.

This frequency range is the one most frequently used for RFID systems (see also Figure 5.2). The European regulations allows RFID systems on this frequency – as opposed to traditional ISM applications – to operate as SRD applications with a higher field strength (see Section 5.3.1.4).

### *5.1.4 Frequency Range 27.125 MHz (ISM)*

The frequency range 26.565–27.405 is allocated to CB radio across the entire European continent as well as in the USA and Canada. Unregistered and non-chargeable radio systems with transmit power up to 4 W permit radio communication between private participants over distances of up to 30 km.

The ISM range between 26.957 and 27.283 MHz is located approximately in the middle of the CB radio range. This range has been designated an ISM band by the international ITU. In directive CEPT/ERC REC 70-03, CEPT/ERC and ETSI designate this range as a harmonised frequency.

ISM applications operating in this frequency range include diathermic apparatus (medical application), high-frequency welding equipment (industrial application), remote controlled models and baby intercoms.

The most important RFID application in this frequency range is Eurobalise for transmitting placemarks and speed limits to rail vehicles (see Section 13.8.1).

When installing 27 MHz RFID systems for industrial applications, particular attention should be given to any high-frequency welding equipment that may be located in the vicinity. RF welding equipment generates high field strengths, which may interfere with the operation of RFID systems

operating at the same frequency in the vicinity. When planning 27 MHz RFID systems for hospitals (e.g. access systems), consideration should be given to any diathermic apparatus that may be present.

## 5.1.5 Frequency Range 40.680 MHz (ISM)

The range 40.660–40.700 MHz is located at the lower end of the *VHF range*. The propagation of waves is limited to the ground wave, so damping due to buildings and other obstacles is less marked. The frequency ranges adjoining this ISM range are occupied by mobile commercial radio systems (forestry, motorway management) and by television broadcasting (VHF range I).

The main ISM applications that are operated in this range are telemetry (transmission of measuring data) and remote control applications. The author knows of no RFID systems operating in this range, which can be attributed to the unsuitability of this frequency range for this type of system. The ranges that can be achieved with inductive coupling in this range are significantly lower than those that can be achieved at all the lower frequency ranges that are available, whereas the wavelengths of 7.5 m in this range are unsuitable for the construction of small and cheap backscatter transponders.

This range has been designated an ISM band by the international ITU. In directive CEPT/ERC REC 70-03, CEPT/ERC and ETSI designate this range as a harmonised frequency.

## 5.1.6 Frequency Range 433.920 MHz (ISM)

The frequency range 430.000–440.000 MHz is allocated to amateur radio services worldwide. Radio amateurs use this range for voice and data transmission and for communication via relay radio stations or home-built space satellites.

The propagation of waves in this *UHF frequency range* occurs approximately optically. A strong damping and reflection of incoming electromagnetic waves occurs when buildings and other obstacles are encountered. Depending upon the operating method and transmission power, systems used by radio amateurs can bridge distances of 30–300 km.

The ISM range 433.050–434.790 MHz is located approximately in the middle of the amateur radio band. This range has been designated an ISM band by the international ITU. In directive CEPT/ERC REC 70-03, CEPT/ERC and ETSI designate this range as a harmonised frequency.

This ISM band is extremely heavily occupied by a wide range of ISM applications. In addition to baby intercoms, mainly telemetry transmitters (including those for domestic applications, e.g. wireless external thermometers), cordless headphones, unregistered LPD walkie-talkies for short-range radio, keyless entry systems (handheld transmitters for vehicle central locking) and many other applications are crammed into this frequency range. Unfortunately, mutual interference between the wide range of ISM applications is not uncommon in this frequency range. If possible RFID systems should avoid this frequency band and use the UHF frequency range instead.

## 5.1.7 UHF Frequency Range

The wave propagation in this UHF frequency range is quasi-optical. Buildings and other obstacles cause a strong dampening and reflection of the incident electromagnetic wave.

### 5.1.7.1 Frequency Range 865.0 MHz (SRD)

The frequency range 868–870 MHz has been available for short-range devices (SRDs) in Europe since the end of 1997 and is thus available for RFID applications, even if only with low transmitting power.

In 2004 a new frequency range of 865–868 MHz was introduced for RFID systems. It provides a substantially higher transmitting power. However, this frequency range is not yet really available in all 43 CEPT member states (see Section 5.3.1.5).

Neighbouring frequency ranges are occupied primarily by GSM telephones (GSM-900, e.g. the D network in Germany) and cordless telephones as described in the CT1 + and CT2 standards.

#### 5.1.7.2 Frequency Range 915.0 MHz

Outside Europe, various segments are available in the frequency range 860–950 MHz: In North America between 902–928 MHz (915 MHz), in Japan 950–965 MHz, in Korea 910–915 MHz, in Australia 918–926 MHz, in South Africa 913–915 MHz, and a range around 915 MHz in China (Clasen *et al*. 2005).

### *5.1.8 Frequency Range 2.45 GHz (ISM, SRD)*

The ISM range 2.400–2.4835 GHz partially overlaps with the frequency ranges used by amateur radio and radio location services. The propagation conditions for this UHF frequency range and the higher-frequency SHF range are quasi-optical. Buildings and other obstacles behave as good reflectors and damp an electromagnetic wave very strongly at transmission (passage).

Typical ISM applications that can be found in this frequency range are telemetry transmitters and PC LAN systems for the wireless networking of PCs.

This range has been designated an ISM band by the international ITU. In directive CEPT/ERC REC 70-03, CEPT/ERC and ETSI designate this range as a harmonised frequency. The European regulations allows RFID systems on this frequency – as opposed to traditional ISM applications – to operate as SRD applications with a higher transmitting power (see Section 5.3.1.5).

### *5.1.9 Frequency Range 5.8 GHz (ISM, SRD)*

The ISM range 5.725–5.875 GHz partially overlaps with the frequency ranges used by amateur radio and radio location services.

Typical ISM applications for this frequency range are movement sensors, which can be used as door openers (in shops and department stores), or contactless toilet flushing.

The most common RFID application in this frequency range is toll registration (*RTTT*, Road Transport and *Traffic Telematics*).

This range has been designated an ISM band by the international ITU. In directive CEPT/ERC REC 70-03, CEPT/ERC and ETSI designate this range as a harmonised frequency. The European regulations allows RFID systems on this frequency – as opposed to traditional ISM applications – to operate as SRD applications with a higher transmitting power (see Section 5.3.1.3).

### *5.1.10 Frequency Range 24.125 GHz*

The ISM range 24.00–24.25 GHz overlaps partially with the frequency ranges used by amateur radio and radio location services plus earth resources services via satellite.

Also this frequency range is used primarily by movement sensors, but also directional radio systems for data transmission. The author knows of no RFID systems operating in this frequency range.

### 5.1.11 Selection of a Suitable Frequency for Inductively Coupled RFID Systems

The characteristics of the few available frequency ranges should be taken into account when selecting a frequency for an *inductively coupled* RFID system. The usable field strength in the operating range of the planned system exerts a decisive influence on system parameters. This variable therefore deserves further consideration. In addition, the *bandwidth* (mechanical) dimensions of the antenna coil and the availability of the frequency band should also be considered.

The path of field strength of a magnetic field in the *near-* and *far-field* was described in detail in Section 4.2.1.1. We learned that the reduction in field strength with increasing distance from the antenna was 60 dB/decade initially, but that this falls to 20 dB/decade after the transition to the far-field at a distance of $\lambda/2\pi$. This behaviour exerts a strong influence on the usable field strengths in the system's operating range. Regardless of the operating frequency used, the regulation *EN 300 330* specifies the maximum magnetic field strength at a distance of 10 m from a reader (Figure 5.3).

If we move from this point in the direction of the reader, then, depending upon the wavelength, the field strength increases initially at 20 dB/decade. At an operating frequency of 6.78 MHz the field strength begins to increase by 60 dB/decade at a distance of 7.1 m – the transition into the near-field. However, at an operating frequency of 27.125 MHz this steep increase does not begin until a distance of 1.7 m is reached.

It is not difficult to work out that, given the same field strength at a distance of 10 m, higher usable field strengths can be achieved in the operating range of the reader (e.g. 0–10 cm) in a lower frequency ISM band than would be the case in a higher frequency band. At < 135 kHz the relationships are even more favourable, first because the permissible field strength limit is much

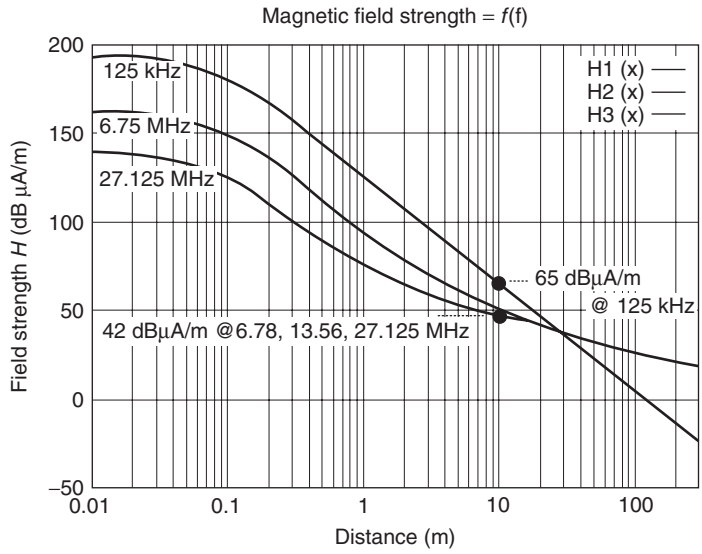


**Figure 5.3** Different permissible field strengths for inductively coupled systems measured at a distance of 10 m (the distance specified for licensing procedures) and the difference in the distance at which the reduction occurs at the transition between near- and far-field lead to marked differences in field strength at a distance of 1 m from the antenna of the reader. For the field strength path at a distance under 10 cm, we have assumed that the antenna radius is the same for all antennas

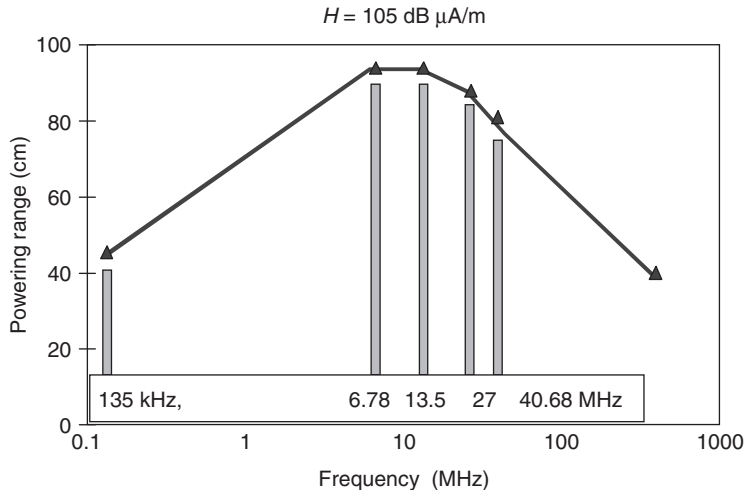


**Figure 5.4** Transponder range at the same field strength. The induced voltage at a transponder is measured with the antenna area and magnetic field strength of the reader antenna held constant (reproduced by permission of Texas Instruments)

higher than it is for ISM bands above 1 MHz, and second because the 60 dB increase takes effect immediately, because the near-field in this frequency range extends to at least 350 m.

If we measure the range of an inductively coupled system with the same magnetic field strength $H$ at different frequencies we find that the range is maximised in the frequency range around 10 MHz (Figure 5.4). This is because of the proportionality $U_{\text{in d}\sim} \omega$. At higher frequencies around 10 MHz the efficiency of power transmission is significantly greater than at frequencies below 135 kHz.

However, this effect is compensated by the higher permissible field strength at 135 kHz, and therefore in practice the range of RFID systems is roughly the same for both frequency ranges. At frequencies above 10 MHz the $L/C$ relationship of the transponder resonant circuit becomes increasingly unfavourable, so the range in this frequency range starts to decrease.

Overall, the following preferences exist for the various frequency ranges:

*<135 kHz* Preferred for large *ranges* and *low-cost transponders*.

- High level of power available to the transponder.
- The transponder has a low power consumption due to its lower clock frequency.
- Miniaturised transponder formats are possible (animal ID) due to the use of ferrite coils in the transponder.
- Low absorption rate or high *penetration depth* in nonmetallic materials and water (the high penetration depth is exploited in animal identification by the use of the bolus, a transponder placed in the rumen).

*6.78 MHz* Can be used for low-cost and medium-speed transponders.

- Worldwide ISM frequency according to ITU frequency plan; however, this is not used in some countries (i.e. licence may not be used worldwide).
- Available power is a little greater than that for 13.56 MHz.
- Only half the clock frequency of that for 13.56 MHz.

*13.56 MHz* Can be used for high-speed/high-end and medium-speed/low-end applications.

- Available worldwide as an ISM frequency.
- Fast data transmission (typically between 106 kbit/s and 848 kbit/s).
- High clock frequency, so cryptological functions or a microprocessor can be realised.
- Parallel capacitors for transponder coil (resonance matching) can be realised on-chip.

*27.125 MHz* Only for special applications (e.g. Eurobalise)

- Not a worldwide ISM frequency.
- Large bandwidth, thus fast data transmission (typically 424 kbit/s).
- High clock frequency, thus cryptological functions or a microprocessor can be realised.
- Parallel capacitors for transponder coil (resonance matching) can be realised on-chip.
- Available power somewhat lower than for 13.56 MHz.
- Only suitable for small ranges.

## 5.2 The International Telecommunication Union (ITU)

The *International Telecommunication Union* (ITU) is an international organization that works with technical and administrative questions regarding telecommunication. Its main tasks include standardisation, allocation and coordination of radio frequencies. It also provides extensive consulting to developing countries regarding the expansion of telecommunication services and networks.

The ITU was founded in Paris by 20 European governments on 17 May 1865 and is thus the oldest still existing international organization. Germany is one of the founding members of the *International Telegraph Union* which in 1934 was renamed International Telecommunication Union. In 1947, ITU become a *UN Specialised Agency* and moved its headquarters to Geneva, Switzerland.

The highest ITU organ is the Plenipotentiary Conference. It meets every four years to determine the ITU's strategy and policy. The ITU Council monitors whether the adopted decisions are implemented. The Council consists of 46 elected member states and meets on an annual basis.

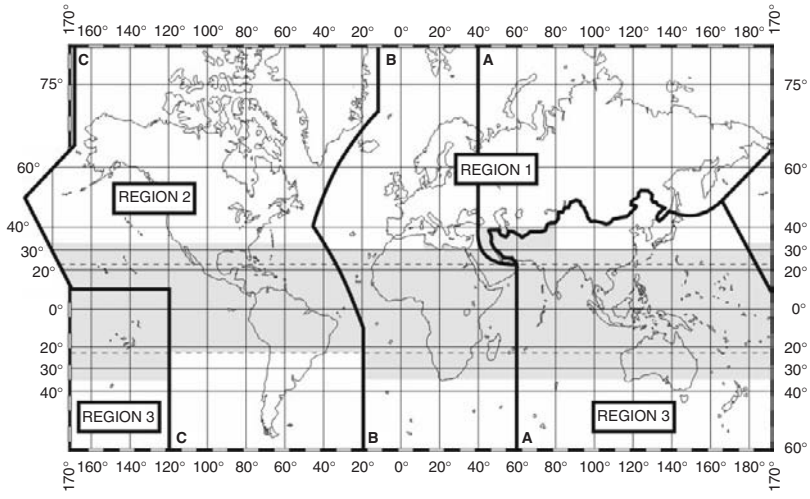


**Figure 5.5** The ITU has divided the world into three geographical regions (figure: www.itu.int)

A permanent Secretariat-General manages the administration and organization of the Union. It also produces regularly reports on the development of the global environment of telecommunication and carries out the coordination work with the United Nations and other regional or international organizations.

The ITU's activities are divided into three sectors. Each sector has its own office with a director elected by the plenipotentiary conference. One of these sectors is the Radiocommunication Sector *(ITU-R)*.

The ITU-R is responsible for the appropriate, balanced and economically feasible *utilization of the radio frequency spectrum*. The ITU-R organizes every other or third year World Radio Conferences that adjust the international frequency arrangement to the existing requirements (BMWi, n.d.).

For the ITU's international *frequency planning*, the world was divided into three geographical regions that require specific considerations and coordination regarding the utilization of the RF spectrum. Region 1 consists of Europe, Africa, the Northern part of Asia (former Soviet Union) and the Middle East. Region 2 comprises North and South America, and Region 3 consists of Southern Asia, Australia and Oceania.

The ITU's frequency allocation also has a wide-ranging effect on the international standardization of the frequency ranges for RFID systems. The almost global availability of ISM frequencies (e.g. 13.56 MHz or 2.45 GHz) is due to the worldwide coordination of these frequencies by the ITU-R. As opposed to this, there is a large variety regarding the use of UHF frequencies between 800 MHz and 1000 MHz in these three regions, e.g. for television, mobile phones (GSM), wireless phones and other applications. In the past, it was not necessary to internationally coordinate the frequency for short-range devices in this frequency range, and today, such coordination will require long-term efforts. This is the reason why frequency allocations for RFID systems in the UHF range vary widely between the three ITU regions. In Europe (Region 1), the frequency range 865–868 MHz is allocated to RFID systems, in the US (Region 2), the frequency range is 902–928 MHz and in Japan (Region 3), for instance, the frequency range is 950–960 MHz.

## 5.3 European Licensing Regulations

In Europe, the allocation of frequency ranges is coordinated by the *CEPT*. The CEPT (Conférence Européene des Postes et Télécommunications) was founded in 1959 by 19 countries. Already ten years later, it comprised 26 member states. Founding members were the monopoly-holding postal and telecommunications administrations. CEPT's tasks included co-operation on commercial, operational, regulatory and technical standardisation issues.

In 1988, CEPT created the ETSI (European Telecommunications Standards Institute) to which the development activities regarding *European Telecommunication Standards* were transferred. The ETSI also specifies the measuring requirements for monitoring the conformity of SRDs (e.g. EN 300 330).

Originally, postal and telecommunications administrations were supervisory and regulatory authorities, and at the same time, operating entities. In the 1990s, European policy demanded unbundling business operations from regulatory and supervisory tasks. This way, the CEPT has developed into a body of regulatory and supervisory authorities. During that time, due to substantial political changes in Europe, a number of central and middle European countries qualified for a CEPT membership.

Today, the CEPT has 45 *member states* and comprises almost the entire geographic area of Europe. Current member states are: Albania, Andorra, Austria, Azerbaijan, Belarus, Belgium, Bosnia-Herzegovina, Bulgaria, Croatia, Cyprus, Czech Republic, Denmark, Estonia, Finland, France, Germany, Greece, Hungary, Ireland, Italy, Latvia, Liechtenstein, Lithuania, Luxembourg, the former Yugoslav Republic of Macedonia, Malta, Moldavia, Monaco, the Netherlands, Norway, Poland, Portugal, Romania, Russian Federation, San Marino, Slovak Republic, Slovenia, Spain, Sweden, Switzerland, Turkey, Ukraine, United Kingdom, Vatican City and Yugoslavia.

Currently, the CEPT only works with sovereign and regulatory issues and has established three committees:

- the *CERP* (Comité Européen de Règlementation Postale) works with postal issues;
- the *ECTRA* (European Committee for Regulatory Telecommunications Affairs) works with telecommunications issues; and
- the *ERC* (European Radiocommunications Committee) works with radiocommunication.

In 1991, the *ERO* (European Radiocommunications Office) was founded in order to permanently represent and support the ERC.

## *5.3.1 CEPT/ERC REC 70-03*

This new CEPT harmonisation document entitled *'ERC Recommendation 70–03 relating to the use of short-range devices (SRD)'* (ERC, 2002) that serves as the basis for new national regulations in all 45 member states of CEPT has been available since October 1997. The old national *regulations for short- range devices* (SRDs) are thus being successively replaced by a harmonised European regulation. In the current version of November 2005 the REC 70-03 also includes comprehensive notes on national restrictions for the specified applications and frequency ranges in the individual member states of CEPT (REC 70-03, Appendix 3–National Restrictions). For this reason, Section 5.4 of this chapter has based the discussion on national regulations in a CEPT member state solely upon the example of Germany. Current notes on the regulation of short-range devices in all other CEPT member states can be found in the current version of REC 70-03. The document is available to download on the home page of the ERO (*European Radio Office*), http://www.ero.dk/.

REC 70-03 defines *frequency bands, power levels, channel spacing*, and the transmission duration (duty cycle) of short-range devices. In CEPT members states that use the R&TTE Directive (1999/5/EC), short-range devices in accordance with article 12 (CE marking) and article 7.2 (putting into service of radio equipment) can be put into service without further licensing if they are marked with a CE mark and do not infringe national regulatory restrictions in the member states in question (Radio Equipment and Telecommunications Terminal Equipment Directive, 1995; see also Section 5.4).

REC 70-03 deals with a total of 13 different applications of short range devices at the various frequency ranges, which are described comprehensively in its own Annexes (Table 5.2).

### 5.3.1.1 Annex 1: Nonspecific Short-Range Devices

Annex 1 describes frequency ranges and permitted transmitting power for *short-range devices* that are not further specified. These frequency ranges can expressly also be used by RFID systems, if they comply with the specified level and power.

### 5.3.1.2 Annex 4: Railway Applications

Annex 4 describes frequency ranges and permitted transmission power for short-range devices in application for *rail traffic* applications. RFID transponder systems such as the *Eurobalise* S21 (see Section 13.5.1) or *vehicle identification* by transponder (see Section 13.5.2) are among these applications.

A spectral mask is defined for the frequency range 27 MHz. The emissions of a reader, including modulation sidebands, must not exceed the level defined by the spectral mask.

**Table 5.3** Nonspecific short range devices

| Frequency band | Power | Comment |
|---|---|---|
| 6785–6795 kHz | 42 dB µA/m @ 10 m | (ITU ISM band) |
| 13.553–13.567 MHz | 42 dB µA/m @ 10 m | (ITU ISM band) |
| 26.957–27.283 MHz | 42 dB µA/m | (ITU ISM band) |
| 40.660–40.700 MHz | 10 mW ERP | (ITU ISM band) |
| 138.2–138.45 MHz | 10 mW ERP | Only available in some states |
| 433.050–434.790 MHz | 10 mW ERP | <10% duty cycle (ITU ISM band) |
| 433.050–434.790 MHz | 1 mW ERP | Up to 100% duty cycle (ITU ISM band) |
| 434.040–434.790 MHz | 10 mW ERP | Up to 100% duty cycle (ITU ISM band) |
| 863.000–870.000 MHz | 25 mW ERP | FHSS, DSSS Modulation, 0.1% duty cycle |
| 868.000–868.600 MHz | 25 mW ERP | <1% duty cycle |
| 868.700–869.200 MHz | 25 mW ERP | <0.1% duty cycle |
| 869.400–869.650 MHz | 500 mW ERP | <10% duty cycle |
| 869.700–870.000 MHz | 5 mW ERP | Up to 100% duty cycle |
| 2400–2483.5 MHz | 10 mW EIRP | (ITU ISM band) |
| 5725–5875 MHz | 25 mW EIRP | (ITU ISM band) |
| 24.00–24.25 GHz | 100 mW | (ITU ISM band) |
| 61.0–61.5 GHz | 100 mW EIRP | (ITU ISM band) |
| 122–123 GHz | 100 mW EIRP | (ITU ISM band) |
| 244–246 GHz | 10 mW EIRP | (ITU ISM band) |

Relevant harmonised standards: EN 300 220, EN 300 330, EN 300 440.

**Table 5.4** Railway applications

| Frequency band | Power | Comment |
|---|---|---|
| 4515 kHz | 7 dB µA/m @ 10 m | Euroloop (spectrum mask available) |
| 27.095 MHz | 42 dB µA/m | Eurobalise (5 dBµA/m @ ±200 kHz |
| 2446–2454 MHz | 500 mW EIRP | Automatic Vehicle Identification (AVI) |

Relevant harmonised standards: EN 300 761, EN 300 330.

#### 5.3.1.3 Annex 5: Road Transport and Traffic Telematics

Annex 5 describes frequency ranges and permitted transmission power for short range devices in *traffic telematics* and *vehicle identification* applications. These applications include the use of RFID transponders in *road toll systems*.

**Table 5.5** Road transport and traffic telematics (RTTT)

| Frequency band | Power | Comment |
|---|---|---|
| 5795–5805 MHz | 8 W EIRP | Road toll systems |
| 5805–5815 MHz | 8 W EIRP | Road toll systems, individual permit available |
| 63–64 GHz | to be decided | Vehicle–vehicle communication |
| 76–77 GHz | 55 dBm peak | Vehicle radar systems |

Relevant harmonised standards: EN 300 674, EN 301 091, EN 201 674.

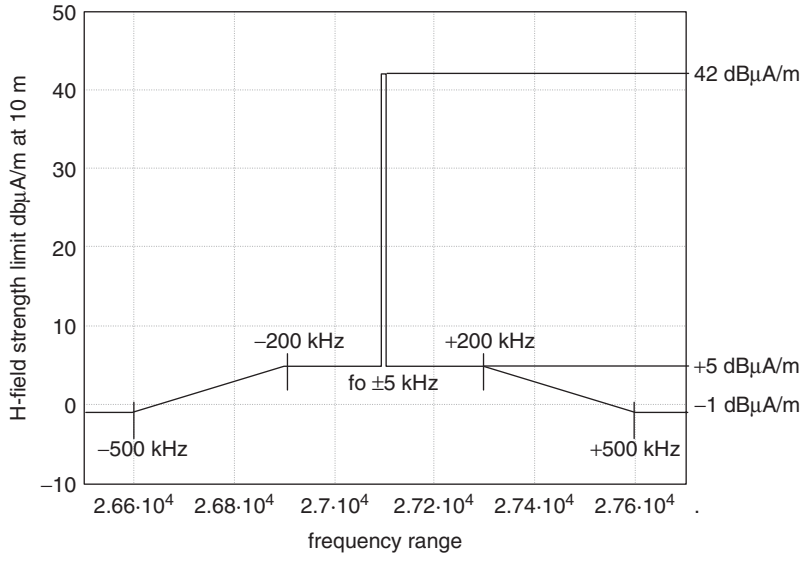


**Figure 5.6** Spectral mask for Eurobalise on 27 MHz

**Table 5.6** Inductive applications

| Frequency band | Power | Comment |
|---|---|---|
| 9.000–59.750 kHz | 72 dB μA/m @ 10 m | From 30 kHz, descending by 3 dB |
| 59.750–60.250 kHz | 42 dB μA/m @ 10 m | |
| 60.250–70 kHz | 69 dB μA/m @ 10 m | Descending by 3 dB |
| 70–119 kHz | 42 dB μA/m @ 10 m | |
| 119–135 kHz | 66 dB μA/m @ 10 m | Descending by 3 dB |
| 135–140 kHz | 42 dB μA/m @ 10 m | |
| 140–148.5 kHz | 37,5 dB μA/m @ 10 m | |
| 148.5–1600 kHz | −5 dB μA/m @ 10 m | Descending by 3 dB |
| 3155–3400 kHz | 13,5 dB μA/m @ 10 m | |
| 6765–6795 kHz | 42 dB μA/m @ 10 m | Spectral mask |
| 7400–8800 kHz | 9 dB μA/m @ 10 m | EAS systems |
| 10.2–11 MHz | 9 dBμA/m @ 10 m | |
| 13.553–13.567 MHz | 42 dB μA/m @ 10 m | Spectral mask |
| 13.553–13.567 MHz | 60 dB μA/m @ 10 m | Only for RFID and EAS. Spectral mask (Fig. 5.7) |
| 26.957–27.283 MHz | 42 dB μA/m @ 10 m | |

Relevant harmonised standards: EN 300 330.

#### 5.3.1.4 Annex 9: Inductive Applications

Annex 9 describes frequency ranges and permitted transmitting power for *inductive radio systems*. These include RFID transponders and e*lectronic article surveillance (EAS)* in shops.

A spectral mask is defined for the frequency ranges 6.780 and 13.560 MHz. The emissions of a reader, including modulation sidebands, must not exceed the level defined by the spectral mask. The spectral mask is identical for both frequency ranges, only the maximum level varies: 60 dB μA/m for RFID and EAS applications on 13.56 MHz; 42 dB μA/m for all the rest.

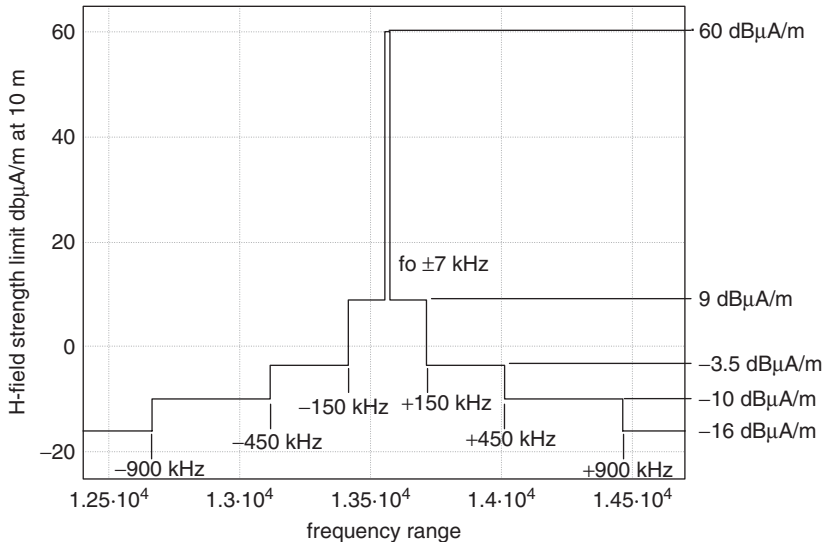


**Figure 5.7** Spectral mask for RFID and EAS applications on 13.56 MHz

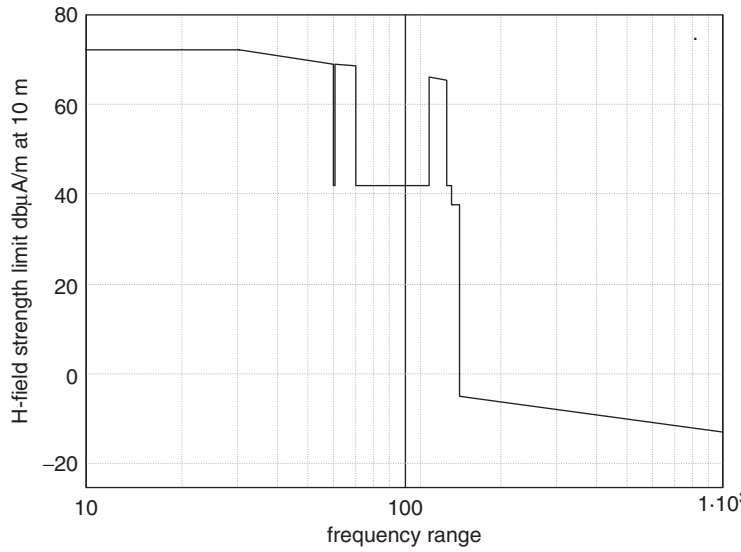


**Figure 5.8** Limit values of the magnetic field strength of inductive systems, measured at a distance of 10 m, in the frequency range of 9 kHz to 1 MHz

### 5.3.1.5 Annex 11: RFID Applications

Annex 11 describes the frequency ranges and permitted transmission power for RFID systems in the UHF range.

**Table 5.7** RFID applications

| Frequency band | Power | Comment |
|---|---|---|
| 865–868 MHz | 100 mW EIRP | Listen before talk, 200 kHz channel spacing |
| 865.6–867.6 MHz | 2 W EIRP | Listen before talk, 200 kHz channel spacing |
| 865.6–868 MHz | 500 mW EIRP | Listen before talk, 200 kHz channel spacing |
| 2446–2454 MHz | 500 mW EIRP | 100% duty cycle |
| | 4 W EIRP | <15% duty cycle; only within buildings |

Relevant harmonised standards: EN 300 330.

## *5.3.2 Standardised Measuring Procedures*

According to Article 12 (CE marking) and Article 7.2 (putting into service of radio equipment) of the *R&TTE Directive (1995/5/EG)*, radio equipment can be operated without permits, unless they are not CE marked. Manufacturers, though, have to use appropriate procedures for checking and testing that the equipment complies with current regulations. The *ETSI* (European Telecommunications Standards Institute) has therefore developed EN standardised measuring methods for electromagnetic compatibility and radio spectrum matters, spurious emissions and other parameters. These standards are divided into two categories: generic standards that comprise a wide frequency range, and specific standards that take into account specific characteristics of individual applications.

### 5.3.2.1 Generic Standards

The three generic standards define measuring methods for transmitters and receivers of short-range devices that reproducibly verify compliance with the limit values defined in ERC REC 70-03, independent of the SRD application.

- *EN 300 330:* Electromagnetic compatibility and Radio spectrum Matters (ERM); Short Range Devices (SRD); Radio equipment in the frequency range 9 kHz to 25 MHz and inductive loop systems in the frequency range 9 kHz to 30 MHz.

  Part 1: Technical characteristics and test methods
  Part 2: Harmonized EN under article 3.2 of the R&TTE Directive
- *EN 300 220:* Electromagnetic compatibility and Radio spectrum Matters (ERM); Short Range Devices (SRD); Radio equipment to be used in the 25 MHz to 1000 MHz frequency range with power levels ranging up to 500 mW;

  Part 1: Technical characteristics and test methods
  Part 2: Harmonized EN under article 3.2 of the R&TTE Directive
- *EN 300 440:* Electromagnetic compatibility and Radio spectrum Matters (ERM); Short Range Devices (SRD); Radio equipment to be used in the 1 GHz to 40 GHz frequency range;

  Part 1: Technical characteristics and test methods
  Part 2: Harmonized EN under article 3.2 of the R&TTE Directive

In addition to inductive radio systems, *EN 300 330* also deals with *electronic article surveillance* (for shops), alarm systems, *telemetry transmitters*, and short-range telecontrol systems, which are considered under the collective term short-range devices (SRDs). EN 300 330 distinguishes four product classes (Table 5.8) of inductive loop coil transmitters.

Inductive loop coil transmitters in accordance with EN 300 330 are characterised by the fact that the antenna is formed by a wire loop with one or more windings. All the inductively coupled RFID

**Table 5.8** Classification of the product types

| | |
|---|---|
| Class 1 | Transmitter with inductive *loop antenna*, in which the antenna is integrated into the device or permanently connected to it. Enclosed antenna area $<30\,m^2$ |
| Class 2 | Transmitter with inductive loop antenna, in which the antenna is manufactured to the customer's requirements. Devices belonging to class 2, like class 1 devices, are tested using two typical customer-specific antennas. The enclosed antenna area must be less than $30\,m^2$ |
| Class 3 | Transmitter with large inductive loop antenna, $>30\,m^2$ antenna area. Class 3 devices are tested without an antenna |
| Class 4 | E field transmitter. These devices are tested with an antenna |

systems in the frequency range 9 kHz to 30 MHz described in EN 300 330 belong exclusively to class 1 and class 2 types.

In class 1 (integral antenna) and class 2 inductive loop coil transmitters the *H field* of the radio system is measured in the direction in which the field strength reaches a maximum. The measurement should be performed in free space, with a distance of 10 m between measuring antenna and measurement object. The transmitter is not modulated during the field strength measurement.

*EN 300 220* covers low-power radio systems, both within the ISM bands and throughout the entire frequency range of 25 MHz to 1000 MHz (e.g. estate radio and pagers on 466.5 MHz). RFID systems are not explicitly stated, the frequency range below 30 MHz (27.125 MHz) is covered by EN 300 330, whereas frequency ranges of 40.680 and 433.920 MHz are not typical for RFID applications.

The *EN 300 440* standard, entitled *'Radio Equipment and Systems (RES); Short range devices, technical characteristics and test methods for radio equipment to be used in the 1 GHz to 25 GHz frequency range with power levels ranging up to 500 mW,'* forms the basis for national European regulations for low power radio systems. EN 300 440 classifies devices according to three types – classes I to III.

RFID systems with *backscatter transponders* are classified as class II systems. Further details are governed by the CEPT recommendation *T/R 60-01 'Low power radiolocation equipment for detecting movement and for alert'* (EAS) and T/R 22-04 '*Harmonisation of frequency bands for Road Transport Information Systems (RTI)*' (toll systems, freight identification).

Various ISM and short-range applications are classified as class I and III systems. Typical applications in these classes are movement sensors (for alarm systems, door openers and similar applications), data transmission systems (wireless LAN for PC), remote control systems and telemetry.

#### 5.3.2.2 Specific Standards

In addition to generic standards, there is a number of specific standards. These standards do not only comprise specific technical requirements regarding transmitters and receivers, but also requirements regarding the antennas to be used.

- *ETSI TR 102 436:* Electromagnetic compatibility and Radio spectrum Matters (ERM); Installation and commissioning of RFID Systems operating at UHF.
- *EN 300 674:* Electromagnetic compatibility and Radio spectrum Matters (ERM); Road Transport and Traffic Telematics (RTTT); Technical characteristics and test methods for Dedicated Short Range Communications (DSRC) transmission equipment (500 kbit/s, 250 kbit/s) operating in the 5.8 GHz Industrial, Scientific and Medical (ISM) band.

- *EN 300 761:* Electromagnetic compatibility and Radio spectrum Matters (ERM); Short Range Devices (SRD); Automatic Vehicle Identification (AVI) for railways operating in the 2.45 GHz frequency range;

  Part 2: Harmonized standard covering essential requirements under article 3.2 of the R&TTE Directive.
- *EN 301 091:* Electromagnetic compatibility and Radio spectrum Matters (ERM); Road Transport and Traffic Telematics (RTTT); Technical characteristics and test methods for radar equipment operating in the 76 GHz to 77 GHz band.
- *EN 302 208:* Electromagnetic compatibility and Radio spectrum Matters (ERM); Radio Frequency Identification Equipment operating in the band 865 MHz to 868 MHz with power levels up to 2 W;

  Part 2: Harmonized standard covering essential requirements under Article 3.2 of the R&TTE Directive.

## 5.4 National Licensing Regulations in Europe

In Europe, the recommendations of the ERC (European Radiocommunications Committee) serve as the basis for *national legislative and licensing regulations* for radio systems. For RFID systems REC 70-03 (short-range devices, SRD) applies. The website of the ERO (European Radio Office) provides current notes on the national regulation of SRDs in the member states of CEPT (see Section 5.3.1).

In all member states of the EU and the member states of CEPT that apply the EU Directive *1999/5/EC* ('Radio and Telecommunications Terminal Equipment Directive', R&TTE Directive), SRDs can be offered for sale without further licensing (ERC, 2000). This is the case, under the prerequisite that the applicable licensing regulations for the frequency ranges and applications in question are adhered to. The manufacturer needs only to confirm that the relevant regulations have been adhered to for each product (EC Declaration of Conformity), which it does by displaying a *CE mark* upon the product.

Notes on the procedure regarding the CE marking and sale of radio and telecommunications systems can be found on the *R&TTE homepage* of the EU at http://europa.eu.int/comm/enterprise/rtte.

Basic notes on the new legislation regarding the CE marking of products can be found at http://europa.eu.int/comm/enterprise/newapproach/legislation/guide/legislation.htm.

### *5.4.1 Germany*

In Germany, the licensing of RFID systems is regulated by decrees of the *Federal Network Agency* for Electricity, Gas, Telecommunications and Railways (http://www.bundesnetzagentur.de/). The Federal Network Agency is an independent higher federal authority operating within the Federal Ministry of Economics and Technology and has its headquarters in Bonn. The Federal Network Agency was created from the former Regulatory Authority for Telecommunications and Postal Affairs ($R_{EG}TP$) which in turn originated from the Federal Ministry for Postal Affairs and Telecommunications (BMPT) and the Federal Office for Postal Affairs and Telecommunications (BAPT) and was renamed as the Federal Network Agency on 13 July 2005. The Federal Network Agency works with liberalisation and deregulation issues in order to enhance the development of the power, gas, telecommunications, postal, – and from 1 January 2006 – the railway infrastructure market (Bundesnetzagentur, n.d.).

#### 5.4.1.1 Inductive Radio Applications

In Decree 1/2005 of the Federal Network Agency – most currently amended by Decree 39/2005 (Bundesnetzagentur, n.d.), the permission of inductive radio applications was adapted to the European Recommendation REC 70-03 (see Section 5.3.1). Based on Article 55 of the Telecommunications Law (TKG from 26 June 2004), frequencies in the range 9–30 000 kHz were allocated to the public for the use of inductive radio applications. The use of these frequencies is not linked to any specific technical standard.

All radio systems that correspond to the German regulation or were put into operation in accordance with the provisions of Directive 1999/5/EC (R&TTE Directive), and are marked accordingly (CE marking), may be operated. Of course, national restrictions must still be adhered to.

Table 5.9 present the frequency utilization parameters. In frequency ranges (a), (b) and (e), a level reduction of the magnetic field strength by 3 dB per octave – starting at 30 kHz – has to be taken into account (see also Figure 5.9). In frequency ranges (a)–(i), only frame, coil or loop antennas with a circumference of 30 m and smaller may be used. In frequency ranges (a), (c) and (e), for small loop antennas with an area of between 0.05 and 0.16 $m^2$ – frequently used by RFID systems – the maximum permissible field strength has to be reduced by factor $10\times$ log (area/0.16 $m^2$).

In frequency range (o1), only RFID systems and electronic article surveillance (EAS) systems are permitted to be operated. Frequency range (k) is preferably reserved for the use of hearing aids and is therefore not available for RFID systems.

#### 5.4.1.2 RFID Systems in the UHF Range

In Decree 60/2004 of the Federal Network Agency – most recently amended by Decree 7/2005 (Bundesnetzagentur, n.d.) – the permission of inductive radio applications was adapted to the European Recommendation REC 70-03 (see Section 5.3.1). Based on Article 55 of the Telecommunica-

**Table 5.9** Permitted frequency ranges and field strengths at a distance of 10 m

| Frequency range (MHz) | Field strength $H$ @ 10 m (dB µA/m) |
|---|---|
| a) 0.009–0.05975 | 72 |
| b) 0.05975–0.06025 | 42 |
| c) 0.06025–0.070 | 69 |
| d) 0.070–0.119 | 42 |
| e) 0.119–0.127 | 66 |
| f) 0.127–0.135 | 42 |
| g) 0.135–0.149 | 42 |
| h) 0.140–2.500 | −5 |
| i) 0.140–0.1485 | 37.7 |
| j) 2.500–30.000 | −5 |
| k) 3.155–3.400 | 13.5 |
| l) 6.765–6.795 | 42 |
| m) 7.400–8.000 | 9 |
| n) 10.200–11.000 | 9 |
| o) 13.553–13.567 | 42 |
| o1) 13.553–13.567 | 60 (only for RFID and EAS systems) |
| p) 26.957–27.283 | 42 |

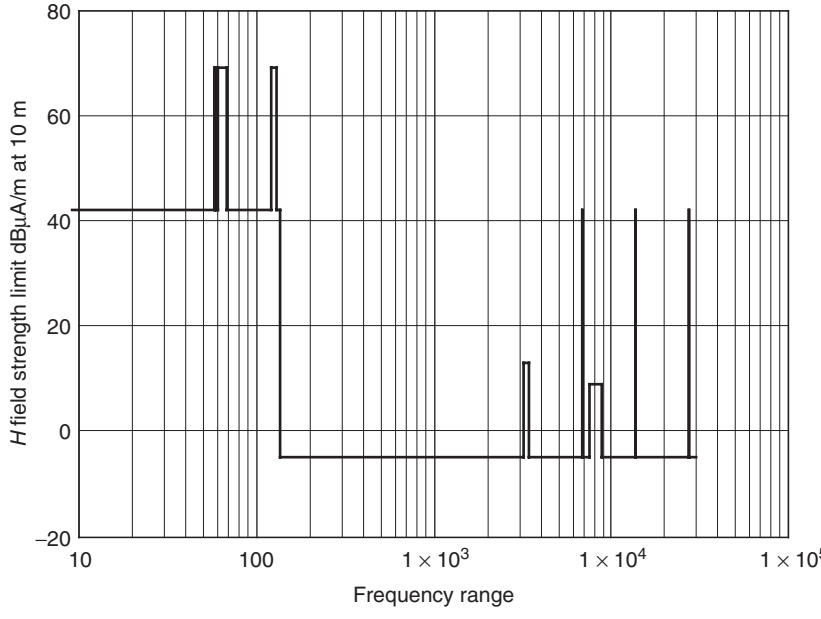


**Figure 5.9** The permitted frequency range up to 30 MHz and the maximum field strength at a distance of 10 m in Germany

tions Law (TKG from 26 June 2004), frequencies in the ranges 865–868 MHz and 2.446–2.454 GHz were allocated to the public for radio applications used for identification purposes (RFID). The use of these frequencies is not linked to any specific technical standard.

All radio systems that correspond to the German regulation or were put into operation in accordance with the provisions of Directive 1999/5/EC (R&TTE Directive), and are marked accordingly (CE marking), may be operated. Of course, national restrictions must still be adhered to.

Table 5.10 shows the frequency utilization parameters. The frequency range 858–868 MHz is divided into 15 channels (K1–K15). The channel medium frequency of a channel can be calculated as follows:

$$f_{\mathrm{m}} = 864.9\,\mathrm{MHz} + (0.2\,\mathrm{MHz} \cdot \text{channel number}) \tag{5.1}$$

In the frequency range 865–868 MHz, readers are operated in the LBT mode (listen before talk). Before emission, channel allocation is checked. Emission may only take place on a free channel. Here, the receiver sensitivity threshold for recognizing channel allocation depends on the effected radiated power of the RFID reader.

In the frequency range 2446–2454 MHz, an effected radiated power $> 500$ mW must not be used outside buildings. The field strength measured at a distance of 10 m from the building must not exceed the field strength generated by a 500 mW signal in the open and measured at the same distance. If RFID applications are operated by different users within a building, the same condition applies at the borders of the individual operating spaces.

**Table 5.10** Frequency utilization parameters for RFID systems in the frequency range 868 MHz and 2.45 GHz

| Frequency range (Mhz) | Maximum emission power | Duration of frequency allocation | Channel bandwidth/spacing | Modulation type |
|---|---|---|---|---|
| 24446–2454 | 500 mW EIRP<br>4 W EIRP within buildings | ≤15% | | Frequency hopping spread spectrum (FHSS) |
| b1) 865–868 | 100 mW ERP | LBT | 200 kHz, Ch 1–15 | No frequency hopping or spread spectrum |
| b2) 865.6–867.6 MHz | 2 W ERP | LBT | 200 kHz, Ch 4–13 | |
| b3) 865.6–868 MHz | 500 mW ERP | LBT | 200 kHz, Ch 4–15 | |

**Table 5.11** Receiver sensitivity threshold for recognizing channel allocation in the frequency range 865–868 MHz

| Effected radiated power (ERP) | Receiver sensitivity threshold (dB m) |
|---|---|
| ≤100 mW | ≤ −83 |
| 101–500 mW | ≤ −83 |
| 501 mW to 2 W | ≤ −83 |

## 5.5 National Licensing Regulations

### *5.5.1 USA*

In the USA, RFID systems must be licensed in accordance with licensing regulation '*FCC Part 15*'. This regulation covers the frequency range from 9 kHz to above 64 GHz and deals with the intentional generation of electromagnetic fields by low-power and minimum-power transmitters (intentional radiators) plus the unintentional generation of electromagnetic fields (spurious radiation) by electronic devices such as radio and television receivers or computer systems. The category of low-power transmitters covers a wide variety of applications, for example cordless telephones, biometry and telemetry transmitters, on-campus radio stations, toy remote controls and door openers for cars. Inductively coupled or backscatter RFID systems are not explicitly mentioned in the *FCC regulation*, but they automatically fall under its scope due to their transmission frequencies, which are typically in the ISM bands, and their low transmission power.

Table 5.12 lists the frequency ranges that are important for RFID systems. In all other frequency ranges the permissible limit values for spurious radiation given in Table 5.12 apply to RFID systems. It should be noted here that, unlike the European licensing regulation ETS 300 330, the maximum permissible field strength of a reader is principally defined by the electrical field strength $E$. The

**Table 5.12** Permissible field strengths for RFID systems in accordance with FCC Part 15 (as of January 2006)

| Section | Frequency range | Maximum electric field/ measuring distance | Conversion (dB µA/m @ 10 m) |
|---|---|---|---|
| 15.225 | 13.553–13.567 | 15 848 µV/m @ 30 m | 42 |
| | 13.410–3.553/ 13.567–13.710 | 334 µV/m @ 30 m | 8.5 |
| | 13.110–13.410/ 13.710–14.010 | 106 µV/m @ 30 m | −1.5 |
| 15.227 | 26.960–27.280 | 10 000 µV/m @ 30 m | 38 |
| 15.229 | 40.660–40.700 | 1000 µV/m @ 3 m | |
| 15.240 | 433.5–434.5 | 11 000 µV/m @ 3 m | |
| 15.249 | 902.0–928.0 | 50 mV/m @ 3 m | |
| | 2400–2483 | 50 mV/m @ 3 m | |
| | 5725–5875 | 50 mV/m @ 3 m | |
| | 24000–24250 | 250 mV/m @ 3m | |

**Table 5.13** Permissible disturbance field strength in the remaining frequency ranges acc. to FCC Part 15, Section 15.209

| Frequency range/MHz | Maximum electric field | Measuring distance (m) |
|---|---|---|
| 0.009–0.490 | 2400/$f$ µV/m | 300 |
| 0.490–1.705 | 24/$f$ mV/m | 30 |
| 1.705–30.00 | 30 µV/m | 30 |
| 30.00–88.00 | 100 µV/m | 3 |
| 88.00–216 | 150 µV/m | 3 |
| 216–960 | 200 µV/m | 3 |
| >960 | 500 µV/m | 3 |

measuring distance is selected such that a measurement is made in the far-field of the generated field. This also applies for inductively coupled RFID systems in the frequency range below 30 MHz, which primarily generate a high-frequency magnetic field.

## 5.6 Comparison of National Regulations

At first glance, a comparison of different licensing regulations appears to be rather difficult as different countries use different measuring units and distances. In the following section, we will therefore look at the conversion of different values for inductive as well as for UHF and microwave systems.

### *5.6.1 Conversion at 13.56 MHz*

For inductively coupled systems, the maximum permissible field strength is stated as either electric field strength $E$ in V/m (e.g. FCC Part 15) or as relative level h of the magnetic field strength in dB µA/m (e.g. ERC REC 70-03). In addition, the distance between measuring object and measuring antenna varies. Typical distances are 13.56 MHz at 10 m (e.g. ERC REC 70-03 or Japan) or 30 m (e.g. FCC Part 15). Figure 5.10 shows the curve of the magnetic field strength of a RFID reader

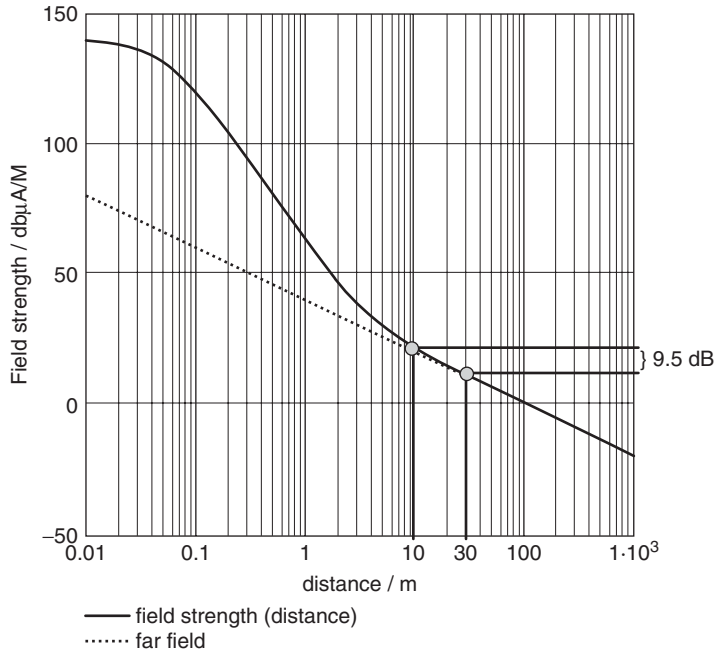


**Figure 5.10** Magnetic field strength curve of an RFID reader over the distance to the antenna. The two measuring points at a distance of 10 and 30 m result in a difference of 9.5 dB between measured field strength levels

at 13.56 MHz. At a distance of 10 m from the reader's antenna, we are already in the far-field. In the far-field, magnetic field strength $H$ can be easily converted into electric field strength $E$ using Equation (4.63). If we calculate with levels, multiplying can be replaced by adding $z_o$.

$$z_o = 20 \cdot \oplus \log(z_o) = 20 \oplus \log(377) = 51.52\,\text{dB} \tag{5.2}$$

For a constant measuring distance, the following formula can be used to convert the level of the magnetic field strength into a level of the electrical field strength:

$$e[\text{dB}\mu\text{V/m}] = h[\text{dB}\mu\text{A/m}] + 51.52\,\text{dB} \tag{5.3}$$

Converting different measuring distances does not constitute a major problem either. We know that field strength in a far-field decreases at a ratio of $1/r$. Using a logarithmic scale, this corresponds to a decrease of the level by 20 dB per decade, i.e. per tenfold distance $r$ (see also Figure 5.10, and Equation (4.65)). We therefore extend Equation (5.3) by the contribution of a different measuring distance:

$$e[\text{dB}\mu\text{V/m}]|_{\text{r2}} \quad = \quad h[\text{dB}\mu\text{A/m}]|_{\text{r1}} + 51.52\,\text{dB} + 20 \cdot \log(r_1/r_2) \tag{5.4}$$

Now, we can simply convert the field strength level into an absolute value:

$$E[\mu\text{V/m}]|_{\text{r2}} = 10^{\{h[\text{dB}\,\mu\text{A/m}]|r1+51.52\,\text{dB}+20.\log(r1/r2)/20\}} \tag{5.5}$$

and in the reverse direction:

$$h[\mathrm{dB\mu A/m}]|_{\mathrm{r1}} = 20 \cdot \log(E[\mu\mathrm{V/m}]|_{\mathrm{r2}}) - 51.52 - 20 \cdot \log(r_1/r_2) \tag{5.6}$$

If we use Equation (5.5) to convert a field strength $H$ of 42 dB µA/m at a distance of 10 m – which corresponds to the CEPT permissible magnetic field strength – into an electric field strength $E$ at a distance of 30 m, the resulting value is 15 848 µV/m. This value corresponds to FCC defined maximum field strength. This does not come as a surprise as the frequency range of 13.56 MHz (ISM frequency) has been largely internationally harmonised.

### *5.6.2 Conversion on UHF*

Also in the frequency ranges exceeding 30 MHz, we find different definitions of the values that are permissible for the radiated power. They state either an electrical field strength $E$ at a specific distance (e.g. FCC Part 15) or the effected radiated power ERP or EIRP of the antenna (see Section 4.2.5.2; e.g. ERC REC 70-03).

We can use Equation (4.65) to easily convert the effective radiated power EIRP into the electrical field strength $E$ for any distance to the transmitting antenna.

# 6

# Coding and Modulation

The block diagram in Figure 6.1 describes a digital *communication system*. Similarly, *data transfer* between reader and transponder in an RFID system requires three main functional blocks. From the reader to the transponder – the direction of data transfer – these are: *signal coding* (*signal processing*) and the *modulator* (*carrier circuit*) in the *reader* (*transmitter*), the *transmission medium* (*channel*), and the *demodulator* (*carrier circuit*) and *signal decoding* (*signal processing*) in the *transponder* (*receiver*).

A signal coding system takes the message to be transmitted and its *signal representation*, and matches it optimally to the characteristics of the *transmission channel*. This process involves providing the message with some degree of protection against interference or collision and against intentional modification of certain signal characteristics (Herter and Lörcher, 1987). Signal coding should not be confused with modulation, and therefore it is referred to as *coding in the baseband*.

Modulation is the process of altering the signal parameters of a high frequency carrier, i.e. its amplitude, frequency or phase, in relation to a modulated signal, the baseband signal.

The transmission medium transmits the message over a predetermined distance. The only transmission media used in RFID systems are magnetic fields (inductive coupling) and electromagnetic waves (microwaves).

*Demodulation* is an additional modulation procedure to reclaim the signal in the baseband. As there is often an *information source* (input) in both the transponder and the reader, and information is thus transmitted alternately in both directions, these components contain both a *modulator* and a *demodulator*. This is therefore known as a *modem* (modulator – demodulator), a term that describes the normal configuration (Herter and Lörcher, 1987).

The task of signal decoding is to reconstruct the original message from the baseband-coded *received signal* and to recognise any *transmission errors* and flag them as such.

## 6.1 Coding in the Baseband

Binary ones and zeros can be represented in various *line codes*. RFID systems normally use one of the following coding procedures: NRZ, Manchester, Unipolar RZ, DBP (differential bi-phase), Miller, differential coding on PP (pulse pause) coding.

Various boundary conditions should be taken into consideration when selecting a suitable signal coding system for an RFID system. The most important consideration is the signal spectrum after modulation (Couch, 1997; Mäusl, 1985) and susceptibility to transmission errors. Furthermore, in the case of passive transponders (in which the transponder's power supply is drawn from the RF

*RFID Handbook: Fundamentals and Applications in Contactless Smart Cards, Radio Frequency Identification and Near-Field Communication, Third Edition.* Klaus Finkenzeller
© 2010 John Wiley & Sons, Ltd

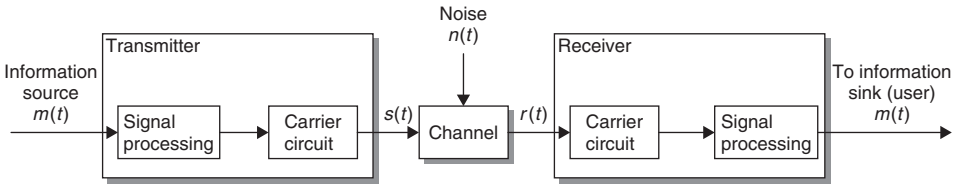


**Figure 6.1** Signal and data flow in a digital communications system (Couch, 1997)

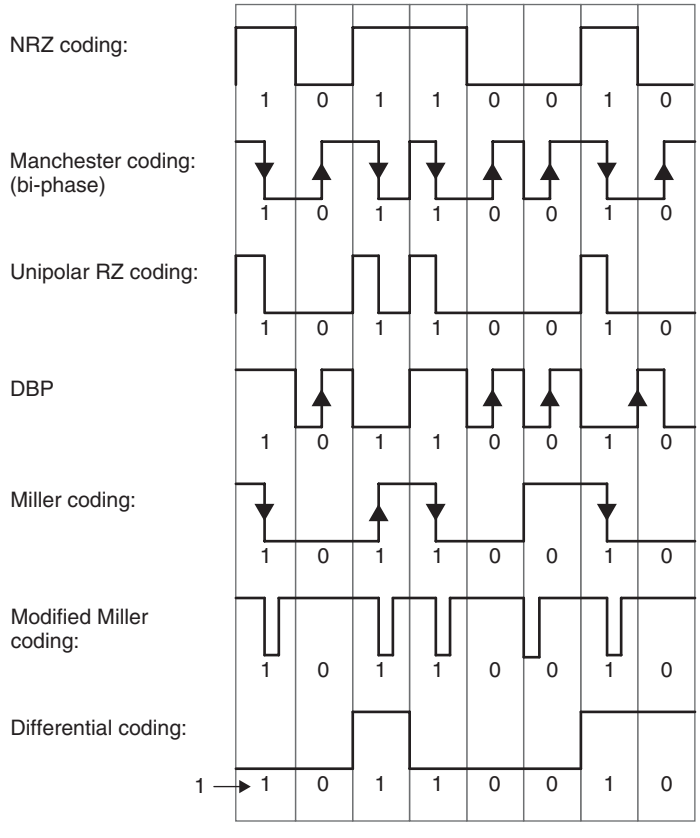


**Figure 6.2** Signal coding by frequently used serial formats or line codes in RFID systems

field of the reader) the power supply must not be interrupted by an inappropriate combination of signal coding and modulation procedures.

## 6.2 Digital Modulation Procedures

Energy is radiated from an antenna into the surrounding area in the form of electromagnetic waves. By carefully influencing one of three signal parameters – power, frequency, phase position – of an

**Table 6.1** Signal coding in the baseband

| | |
|---|---|
| NRZ code | A binary 1 is represented by a 'high' signal and a binary 0 is represented by a 'low' signal. The NRZ code is used almost exclusively with FSK or PSK modulation. |
| Manchester code | A binary 1 is represented by a negative transition in the half-bit period and a binary 0 is represented by a positive transition. The Manchester code is therefore also known as *split-phase coding* (Couch, 1997). This code is often used for data transmission from the transponder to the reader, based upon load modulation using a subcarrier. |
| Unipolar RZ code | A binary 1 is represented by a 'high' signal during the first half-bit period, a binary 0 is represented by a 'low' signal lasting for the entire duration of the bit. |
| DBP code | A binary 0 is coded by a transition of either type in the half-bit period, a binary 1 is coded by the lack of a transition. Furthermore, the level is inverted at the start of every bit period, so that the bit pulse can be more easily reconstructed in the receiver (if necessary). |
| Miller code | A binary 1 is represented by a transition of either type in the half-bit period, a binary 0 is represented by the continuance of the 1 level over the next bit period. A sequence of zeros creates a transition at the start of a bit period, so that the bit pulse can be more easily reconstructed in the receiver (if necessary). |
| Modified Miller code | In this variant of the Miller code each transition is replaced by a 'negative' pulse. The modified Miller code is highly suitable for use in inductively coupled RFID systems for data transfer from the reader to the transponder. Due to the very short pulse durations ($t_{\text{pulse}} \ll T_{\text{bit}}$) it is possible to ensure a continuous power supply to the transponder from the RF field of the reader even during data transfer. |
| Differential coding | Every binary 1 to be transmitted causes a change (toggle) in the signal level, whereas the signal level remains unchanged for a binary zero. Differential coding can be generated very simply from an NRZ signal by using an XOR gate and a D flip-flop. Figure 6.4 shows a circuit to achieve this. |
| Pulse-pause coding | In pulse-pause coding (PPC) a binary 1 is represented by a pause of duration $t$ *before* the next pulse; a binary 0 is represented by a pause of duration $2t$ before the next pulse (Figure 6.4). This coding procedure is popular in inductively coupled RFID systems for data transfer from the reader to the transponder. Due to the very short pulse durations ($t_{\text{pulse}} \ll T_{\text{bit}}$) it is possible to ensure a continuous power supply to the transponder from the RF field of the reader even during data transfer. |

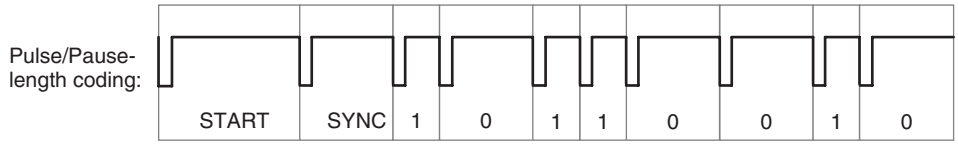


**Figure 6.3** Possible signal path in pulse-pause coding

electromagnetic wave, messages can be coded and transmitted to any point within the area. The procedure of influencing an electromagnetic wave by messages (data) is called *modulation*, and an unmodulated electromagnetic wave is called a *carrier*.

By analysing the characteristics of an electromagnetic wave at any point in the area, we can reconstruct the message by measuring the change in reception power, frequency or phase position of the wave. This procedure is known as *demodulation*.

Classical radio technology is largely concerned with analogue modulation procedures. We can differentiate between *amplitude modulation, frequency modulation* and *phase modulation*, these being the three main variables of an electromagnetic wave. All other modulation procedures are

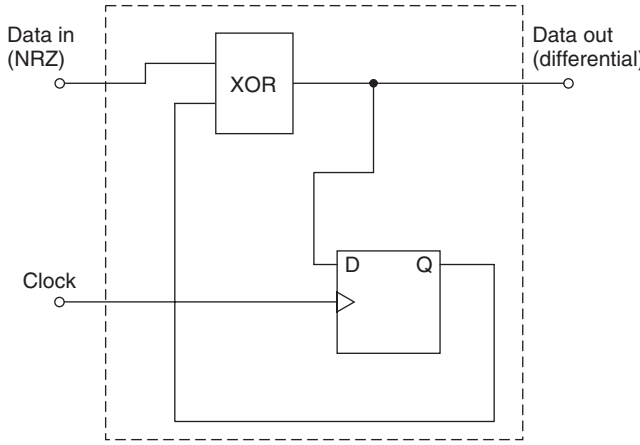


**Figure 6.4** Generating differential coding from NRZ coding

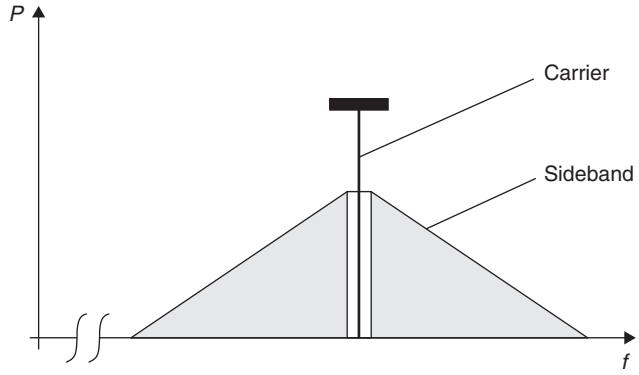


**Figure 6.5** Each modulation of a sinusoidal signal – the carrier – generates so-called (modulation) sidebands

derived from one of these three types. The procedures used in RFID systems are the digital modulation procedures *ASK* (amplitude shift keying), *FSK* (frequency shift keying) and *PSK* (phase shift keying).

In every modulation procedure symmetric *modulation products* – so-called *sidebands* – are generated around the carrier. The spectrum and amplitude of the sidebands are influenced by the spectrum of the code signal in the baseband and by the modulation procedure. We differentiate between the upper and lower sideband.

## *6.2.1 Amplitude Shift Keying (ASK)*

In *amplitude shift keying* the amplitude of a *carrier oscillation* is switched between two states $u_0$ and $u_1$ (keying) by a binary code signal. $U_1$ can take on values between $u_0$ and 0. The ratio of $u_0$ to $u_1$ is known as the *duty factor* $m$.

To find the duty factor $m$ we calculate the arithmetic mean of the keyed and unkeyed amplitude of the carrier signal:

$$\hat{u}_{\mathrm{m}} = \frac{\hat{u}_0 + \hat{u}_1}{2} \tag{6.1}$$

The duty factor is now calculated from the ratio of amplitude change $\hat{u}_0 - \hat{u}_{\mathrm{m}}$ to the mean value $\hat{u}_{\mathrm{m}}$:

$$m = \frac{\Delta\hat{u}_{\mathrm{m}}}{\hat{u}_{\mathrm{m}}} = \frac{\hat{u}_0 - \hat{u}_{\mathrm{m}}}{\hat{u}_{\mathrm{m}}} = \frac{\hat{u}_0 - \hat{u}_1}{\hat{u}_0 + \hat{u}_1} \tag{6.2}$$

In 100% ASK the amplitude of the carrier oscillation is switched between the carrier amplitude values $2\hat{u}_{\mathrm{m}}$ and 0 (*on–off keying*; Figure 6.6). In amplitude modulation using an analogue signal (sinusoidal oscillation) this would also correspond with a modulation factor of $m = 1$ (or 100%) (Mäusl, 1985).

The procedure described for calculating the duty factor is thus the same as that for the calculation of the modulation factor for amplitude modulation using analogue signals (sinusoidal oscillation). However, there is one significant difference between keying and analogue modulation. In keying, a carrier takes on the amplitude $\hat{u}_0$ in the unmodulated state, whereas in analogue modulation the carrier signal takes on the amplitude $\hat{u}_{\mathrm{m}}$ in the unmodulated state.

In the literature the duty factor is sometimes referred to as the percentage carrier reduction $m'$ during keying:

$$m' = 1 - \frac{\hat{u}_1}{\hat{u}_0} \tag{6.3}$$

For the example in Figure 6.7 the duty factor would be $m' = 0.66$ (= 66%). In the case of duty factors <15% and duty factors >85% the differences between the two calculation methods can be disregarded.

The binary code signal consists of a sequence of 1 and 0 states, with a period duration $T$ and a bit duration $\tau$. From a mathematical point of view, ASK modulation is achieved by multiplying this code signal $u_{\mathrm{code}}(t)$ by the carrier oscillation $u_{\mathrm{Cr}}(t)$. For duty factors $m < 1$ we introduce an additional constant $(1 - m)$, so for this case we can still multiply $u_{\mathrm{RF}}(t)$ by 1 in the unkeyed state:

$$U_{\mathrm{ASK}}(t) = (m \cdot u_{\mathrm{code}}(t) + 1 - m) \cdot u_{\mathrm{HF}}(t) \tag{6.4}$$

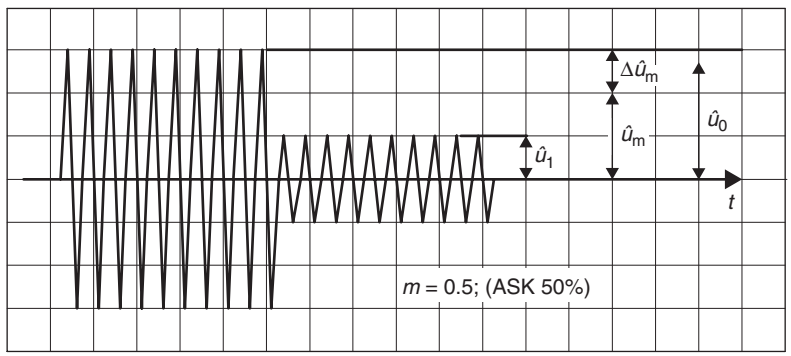


**Figure 6.6** In ASK modulation the amplitude of the carrier is switched between two states by a binary code signal

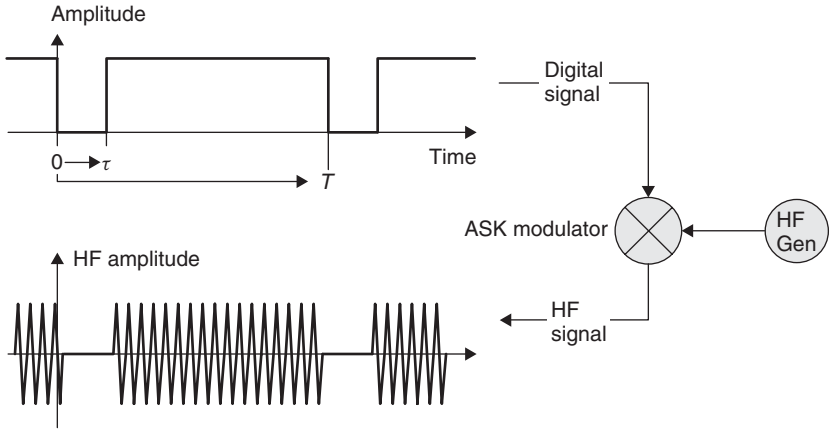


**Figure 6.7** The generation of 100% ASK modulation by the keying of the sinusoidal carrier signal from a RF generator into an ASK modulator using a binary code signal

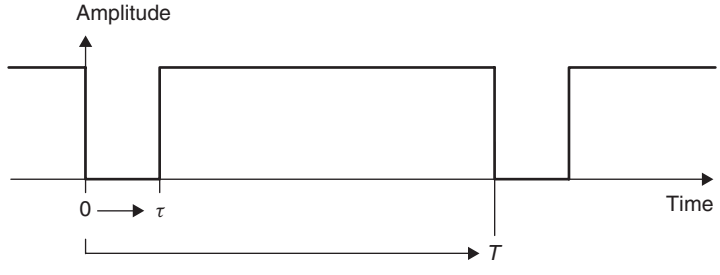


**Figure 6.8** Representation of the period duration $T$ and the bit duration $\tau$ of a binary code signal

The spectrum of ASK signals is therefore found by the convolution of the code signal spectrum with the carrier frequency $f_{Cr}$ or by multiplication of the Fourier expansion of the code signal by the carrier oscillation. It contains the spectrum of the code signal in the upper and lower sideband, symmetric to the carrier (Mäusl, 1985).

A regular, pulse-shaped signal of period duration $T$ and bit duration $\tau$ yields the spectrum specified in Table 6.2.

**Table 6.2** Spectral lines for a pulse-shaped modulated carrier oscillation

| Designation | Frequency | Amplitude |
|---|---|---|
| Carrier oscillation | $f_{CR}$ | $u_{RF} \cdot (1 - m) \cdot (T - \tau)/T$ |
| 1st spectral line | $f_{CR} \pm 1/T$ | $u_{RF} \cdot m \cdot \sin(\pi \cdot \tau/T)$ |
| 2nd spectral line | $f_{CR} \pm 2/T$ | $u_{RF} \cdot m \cdot \sin(2\pi \cdot \tau/T)$ |
| 3rd spectral line | $f_{CR} \pm 3/T$ | $u_{RF} \cdot m \cdot \sin(3\pi \cdot \tau/T)$ |
| $n$th spectral line | $f_{CR} \pm n/T$ | $u_{RF} \cdot m \cdot \sin(n\pi \cdot \tau/T)$ |

### 6.2.2 2 FSK

In *2 frequency shift keying* (2 FSK) the frequency of a carrier oscillation is switched between two frequencies $f_1$ and $f_2$ by a binary code signal (Figure 6.9).

The carrier frequency $f_{CR}$ is defined as the arithmetic mean of the two characteristic frequencies $f_1$ and $f_2$. The difference between the carrier frequency and the characteristic frequencies is termed the frequency deviation $\Delta f_{CR}$:

$$f_{CR} = \frac{f_1 + f_2}{2} \Delta f_{CR} = \frac{|f_1 + f_2|}{2} \tag{6.5}$$

$$\Delta f_{CR} = |f_1 + f_1|/2 \tag{6.6}$$

From the point of view of the time function, the *2 FSK* signal can be considered as the composition of two amplitude shift keyed signals of frequencies $f_1$ and $f_2$. The spectrum of a 2 FSK signal is therefore obtained by superimposing the spectra of the two amplitude shift keyed oscillations. The baseband coding used in RFID systems produces an asymmetric frequency shift keying:

$$\tau \neq \frac{T}{2} \tag{6.7}$$

In these cases there is also an asymmetric distribution of spectra in relation to the mid-frequency $\Delta f_{CR}$ (Mäusl, 1985).

### 6.2.3 2 PSK

In *phase shift keying* the binary states '0' and '1' of a code signal are converted into corresponding phase states of the carrier oscillation, in relation to a reference phase. In 2 PSK the signal is switched between the phase states 0° and 180°.

Mathematically speaking, the shift keying of the phase position between 0° and 180° corresponds with the multiplication of the carrier oscillation by 1 and – 1.

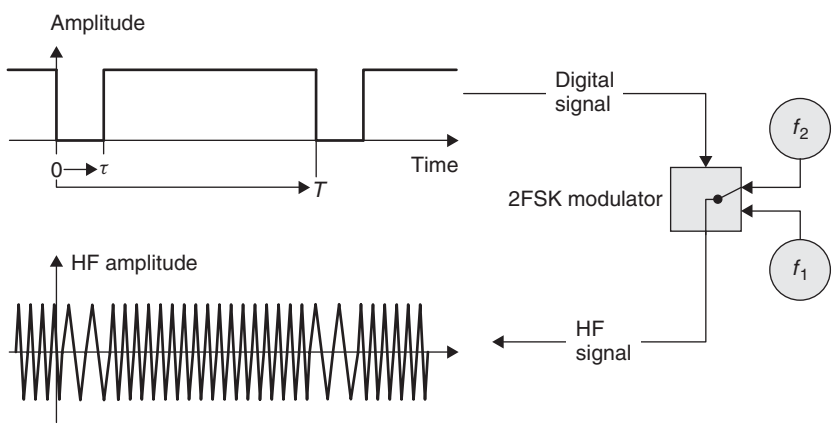


**Figure 6.9** The generation of 2 FSK modulation by switching between two frequencies $f_1$ and $f_2$ in time with a binary code signal

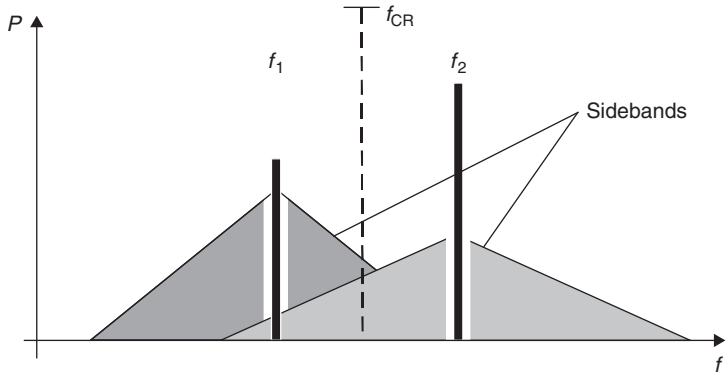


**Figure 6.10** The spectrum of a 2 FSK modulation is obtained by the addition of the individual spectra of two amplitude shift keyed oscillations of frequencies $f_1$ and $f_2$

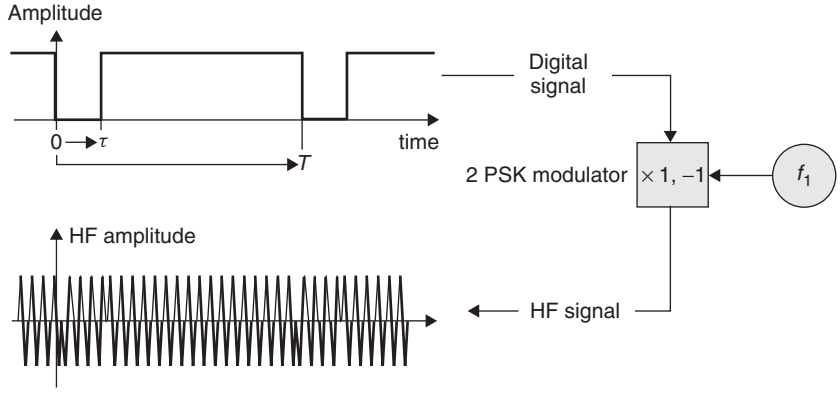


**Figure 6.11** Generation of the 2 PSK modulation by the inversion of a sinusoidal carrier signal in time with a binary code signal

The power spectrum of a 2 PSK can be calculated as follows for a mark-space ratio $\tau/T$ of 50% (Mansukhani, 1996):

$$P(f) = \left(\frac{P \cdot T_s}{2}\right) \cdot [\sin c^2 \pi (f - f_0) T_s + \sin c^2 \pi (f + f_0) T_s] \tag{6.8}$$

where $P$ is transmitter power, $T_s$ is bit duration $(= \tau)$, $f_0$ is centre frequency, and $\sin c(x) = (\sin(x)/x)$.

The envelope of the two sidebands around the carrier frequency $f_0$ follows the function $(\sin(x)/x)^2$. This yields zero positions at the frequencies $f_0 \pm 1/T_s$, $f_0 \pm 2/T_S$, $f_0 \pm n/T_S$. In the frequency range $f_0 \pm 1/T_S$, 90% of the transmitter power is transmitted.

### 6.2.4 Modulation Procedures with Subcarrier

The use of a modulated *subcarrier* is widespread in radio technology. In VHF broadcasting, a stereo subcarrier with a frequency of 38 kHz is transmitted along with the baseband tone channel. The baseband contains only the monophonic signal. The differential 'L–R' signal required to obtain the left and right audio channels can be transmitted 'silently' by the modulation of the stereo subcarrier. The use of a subcarrier therefore represents a *multilevel modulation*. Thus, in our example, the subcarrier is first modulated with the differential signal, in order to finally modulate the VHF transmitter once again with the modulated subcarrier signal (Figure 6.12).

In RFID systems, modulation procedures using a subcarrier are primarily used in inductively coupled systems in the frequency ranges 6.78, 13.56 or 27.125 MHz and in load modulation for data transfer from the transponder to the reader. The load modulation of an inductively coupled RFID system has a similar effect to ASK modulation of RF voltage at the antenna of the reader. Instead of switching the *load resistance* on and off in time with a baseband coded signal, a low-frequency subcarrier is first modulated by the baseband coded data signal. ASK, FSK or PSK modulation may be selected as the modulation procedure for the subcarrier. The *subcarrier frequency* itself is normally obtained by the binary division of the operating frequency. For 13.56 MHz systems, the subcarrier frequencies 847 kHz (13.56 MHz ÷ 16), 424 kHz (13.56 MHz ÷ 32) or 212 kHz (13.56 MHz ÷ 64) are usually used. The modulated subcarrier signal is now used to switch the load resistor on and off.

The great advantage of using a subcarrier only becomes clear when we consider the frequency spectrum generated. Load modulation with a subcarrier initially generates two spectral lines at

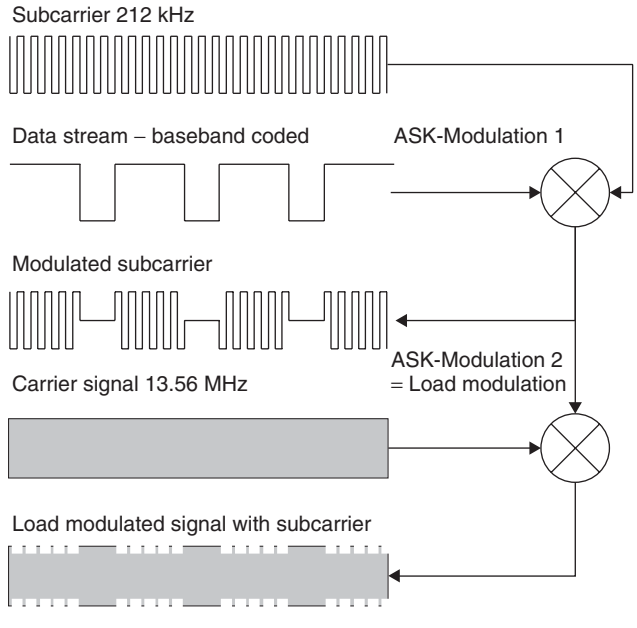


**Figure 6.12** Step-by-step generation of a multiple modulation, by load modulation with ASK modulated subcarrier

a distance $\pm$ the subcarrier frequency $f_H$ around the operating frequency (see Figure 3.17). The actual information is now transmitted in the sidebands of the two subcarrier lines, depending upon the modulation of the subcarrier with the baseband coded data stream. If load modulation in the baseband were used, on the other hand, the sidebands of the data stream would lie directly next to the carrier signal at the operating frequency.

In very loosely coupled transponder systems the difference between the carrier signal of the reader $f_T$ and the received modulation sidebands of the load modulation varies within the range 80–90 dB. One of the two subcarrier modulation products can be filtered out and demodulated by shifting the frequency of the modulation sidebands of the data stream. It is irrelevant here whether the frequencies $f_T + f_H$ or $f_T - f_H$ are used, because the information is contained in all sidebands.

# 7

# Data Integrity

## 7.1 The Checksum Procedure

When transmitting data using contactless technology it is very likely that interference will be encountered, causing undesired changes to the transmitted data and thus leading to transmission errors.

A *checksum* can be used to recognise transmission errors and initiate corrective measures, for example the retransmission of the erroneous data blocks. The most common checksum procedures are parity checks, XOR sum and CRC.

### *7.1.1 Parity Checking*

The *parity check* is a very simple and therefore a very popular checksum procedure. In this procedure a *parity bit* is incorporated into each byte and transmitted with it, with the result that 9 bits are sent for every byte. Before data transfer takes place a decision needs to be made as to whether to check for odd or even parity, to ensure that the transmitter and receiver both check according to the same method.

The value of the parity bit is set such that if odd parity is used an odd number of the nine bits have the value 1, and if even parity is used an even number of bits have the value 1. The even parity bit can also be interpreted as the horizontal checksum (modulo 2) of the data bit. This horizontal checksum also permits the calculation of the exclusive OR logic gating (XOR logic gating) of the data bits.

However, the simplicity of this method is balanced by its poor error recognition (Pein, 1996). An odd number of inverted bits (1, 3, 5, . . .) will always be detected, but if there is an even number of inverted bits (2, 4, 6, . . .) the errors cancel each other out and the parity bit will appear to be correct.

***Example***

Using odd parity the number E5h has the binary representation 1110 0101 $p = 0$.

A parity generator for even parity can be realised by the XOR logic gating of all the data bits in a byte (Tietze and Schenk, 1985). The order in which the XOR operations take place is irrelevant. In the case of odd parity, the parity generator output is inverted (Figure 7.2).

*RFID Handbook: Fundamentals and Applications in Contactless Smart Cards, Radio Frequency Identification and Near-Field Communication, Third Edition.* Klaus Finkenzeller
© 2010 John Wiley & Sons, Ltd

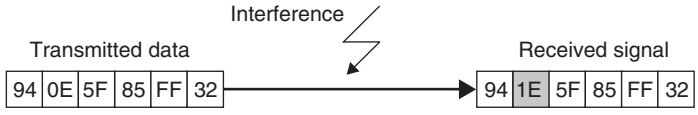


**Figure 7.1** Interference during transmission can lead to errors in the data

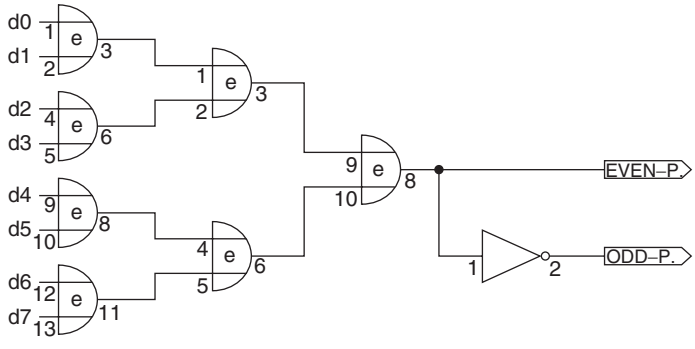


**Figure 7.2** The parity of a byte can be determined by performing multiple exclusive OR logic gating operations on the individual bits

## *7.1.2 LRC Procedure*

The XOR checksum known as the *longitudinal redundancy check* (*LRC*) can be calculated very simply and quickly (Figure 7.3).

The XOR checksum is generated by the recursive XOR gating of all the data bytes in a data block. Byte 1 is XOR gated with byte 2, the outcome of this gating is XOR gated with byte 3, and so on. If the LRC value is appended to a data block and transmitted with it, then a simple check for transmission errors can be performed in the receiver by generating an LRC from the data block + LRC byte. The result of this operation must always be zero; any other result indicates that transmission errors have occurred.

Due to the simplicity of the algorithm, LRCs can be calculated very simply and quickly. However, LRCs are not very reliable because it is possible for multiple errors to cancel each other out, and

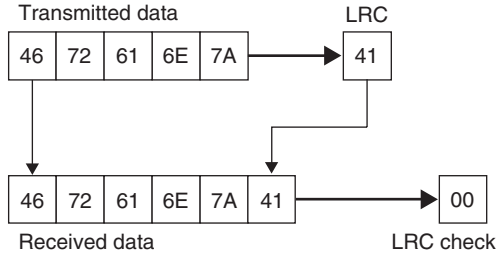


**Figure 7.3** If the LCR is appended to the transmitted data, then a new LRC calculation incorporating all received data yields the checksum 00h. This permits a rapid verification of data integrity without the necessity of knowing the actual LRC sum

the check cannot detect whether bytes have been transposed within a data block (Rankl and Effing, 1996). LRCs are primarily used for the rapid checking of very small data blocks (e.g. 32 byte).

### *7.1.3 CRC Procedure*

The *CRC* (cyclic redundancy check) *procedure* was originally used in disk drives, and can generate a checksum that is reliable enough even for large data quantities. However, it is also excellently suited for error recognition in data transfer via wire-bound (telephone) or wireless interfaces (radio, RFID). The CRC procedure represents a highly reliable method of recognising transmission errors, although it cannot correct errors.

As the name suggests, the calculation of the CRC is a cyclic procedure. Thus the calculation of a CRC value incorporates the CRC value of the data byte to be calculated plus the CRC values of all previous data bytes. Each individual byte in a data block is checked to obtain the CRC value for the data block as a whole.

Mathematically speaking, a CRC checksum is calculated by the division of a polynomial using a so-called *generator polynomial*. The CRC value is the remainder obtained from this division. To illustrate this operation we have calculated a 4-bit CRC sum for a data block. The first byte of the data block is 7Fh, the generator polynomial is $x^4 + x + 1 = 10011$.

To calculate a 4-bit CRC, we first shift the data byte four positions to the left (eight positions for CRC 8, etc.). The four positions that become free are occupied by the starting value of the CRC calculation. In the example this is 00h. The generator polynomial is now gated with the data byte by a repeated XOR operation in accordance with the following rule:

> The highest value bit of the data byte is XOR logic gated with the generator polynomial. The initial zeros of the intermediate result are deleted and filled from the right with positions from the data byte or starting value, in order to carry out a new XOR gating with the generator polynomial. This operation is repeated until a 4 position remainder is left. This remainder is the CRC value for the data byte.

To calculate the CRC value for the entire data block, the CRC value from the preceding data byte is used as the starting value for the subsequent data byte.

If the CRC value that has just been calculated is appended to the end of the data block and a new CRC calculation performed, then the new CRC value obtained is zero. This particular feature of the CRC algorithm is exploited to detect errors in serial data transmission.

When a data block is transmitted, the CRC value of the data is calculated within the transmitter and this value is appended to the end of the data block and transmitted with it. The CRC value

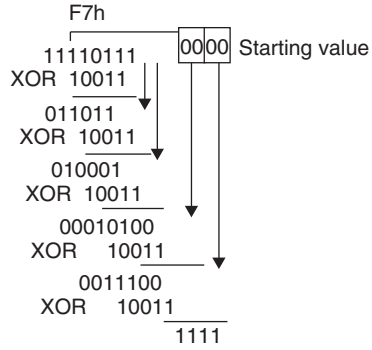


**Figure 7.4** Step-by-step calculation of a CRC checksum

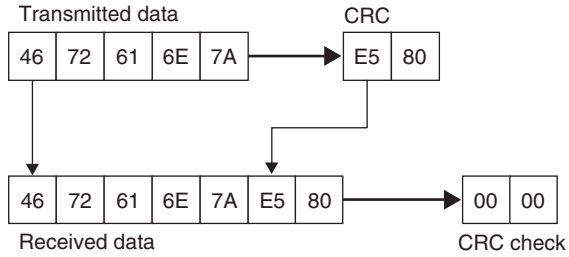


**Figure 7.5** If the CRC is appended to the transmitted data a repeated CRC calculation of all received data yields the checksum 0000h. This facilitates the rapid checking of data integrity without knowing the CRC total

**Table 7.1** Examples of different generator polynomials

| | |
|---|---|
| CRC-8 generator polynomial | $x^8 + x^4 + x^3 + x^2 + 1$ |
| CRC-16 disk controller generator polynomial | $x^{16} + x^{15} + x^2 + 1$ |
| CRC-16 CCITT generator polynomial | $x^{16} + x^{12} + x^5 + 1$ |

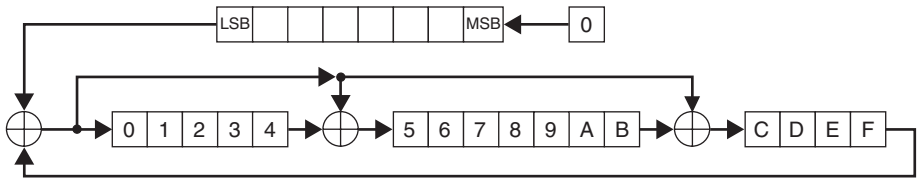


**Figure 7.6** Operating principle for the generation of a CRC-16/CCITT by shift registers

of the received data, including the appended CRC byte, is calculated in the receiver. The result is always zero, unless there are transmission errors in the received block. Checking for zero is a very easy method of analysing the CRC checksum and avoids the costly process of comparing checksums. However, it is necessary to ensure that both CRC calculations start from the same initial value (Figure 7.5).

The great advantage of CRCs is the reliability of error recognition that is achieved in a small number of operations even where multiple errors are present (Rankl and Effing, 1996). A 16-bit CRC is suitable for checking the data integrity of data blocks up to 4 Kbytes in length – above this size performance falls dramatically. The data blocks transmitted in RFID systems are considerably shorter than 4 Kbytes, which means that 12- and 8-bit CRCs can also be used in addition to 16-bit CRCs.

When CRC algorithms were first developed for disk controllers, priority was given to the realisation of a simple CRC processor in the form of a hardware circuit. This gave rise to a CRC processor made up of backcoupled *shift registers* and XOR gates that is very simple to implement.

When calculating CRC 16 using shift registers, the 16-bit shift register is first set to its starting value. The calculation is then initiated by shifting the data bits, starting with the lowest in value, into the backcoupled shift register one after the other. The backcoupling or polynomial division is based upon the XOR logic gating of the CRC bits (Figure 7.7). When all the bits have been shifted through the register, the calculation is complete and the content of the 16-bit CRC register represents the desired CRC (Rankl and Effing, 1996).

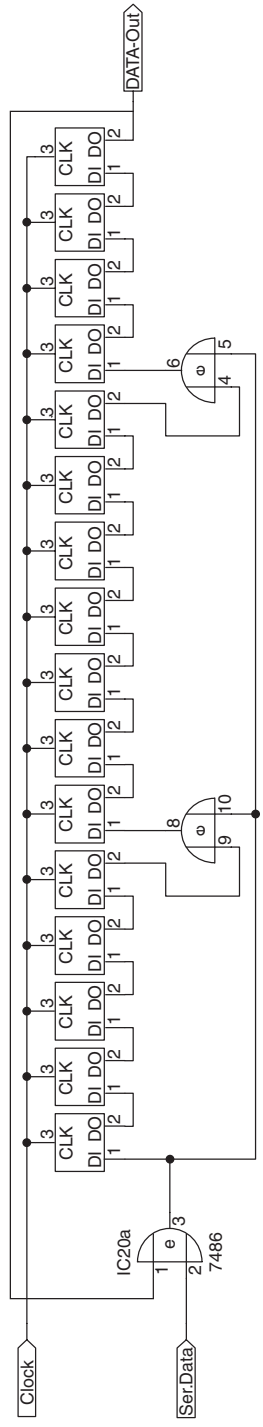


**Figure 7.7** The circuit for the shift register configuration outlined in the text for the calculation of a CRC 16/CCITTT

## 7.2 Multi-Access Procedures – Anticollision

The operation of RFID systems often involves a situation in which numerous transponders are present in the interrogation zone of a single reader at the same time. In such a system – consisting of a 'control station', the reader, and a number of 'participants', the transponders – we can differentiate between two main forms of communication.

The first is used to transmit data from a reader to the transponders (Figure 7.8). The transmitted data stream is received by all transponders simultaneously. This is comparable with the simultaneous reception by hundreds of radio receivers of a news programme transmitted by a radio station. This type of communication is therefore known as *broadcast* (Abramson, n.d.).

The second form of communication involves the transmission of data from many individual transponders in the reader's interrogation zone to the reader. This form of communication is called *multi-access* (Figure 7.9).

Every communication channel has a defined channel capacity, which is determined by the maximum data rate of this communication channel and the time span of its availability. The available channel capacity must be divided between the individual participants (transponders) such that data can be transferred from several transponders to a single reader without mutual interference (collision).

In an inductive RFID system, for example, only the receiver section in the reader is available to all transponders in the interrogation zone as a common channel for data transfer to the reader. The maximum data rate is found from the effective bandwidth of the antennas in the transponder and reader.

The problem of multi-access has been around for a long time in radio technology. Examples include news satellites and mobile telephone networks, where a number of participants try to access a single satellite or base station. For this reason, numerous procedures have been developed with the objective of separating the individual participant signals from one another. Basically, there are four different procedures (Figure 7.10): *space division multiple access (SDMA), frequency domain multiple access (FDMA), time domain multiple access (TDMA)* and *code division multiple access (CDMA)*, otherwise known as *spread-spectrum*. However, these classical procedures are based upon the assumption of an uninterrupted data stream from and to the participants (Fliege, 1996), once a channel capacity has been split it remains split until the communication relationship ends (e.g. for the duration of a telephone conversation).

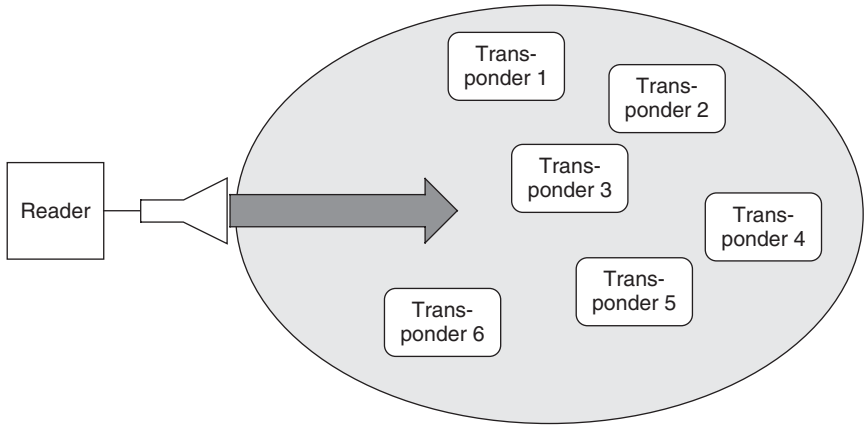


**Figure 7.8** Broadcast mode: the data stream transmitted by a reader is received simultaneously by all transponders in the reader's interrogation zone

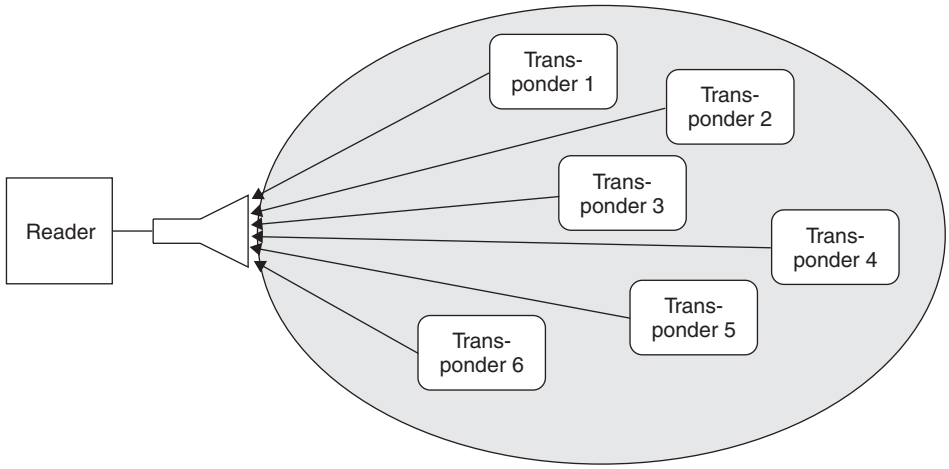


**Figure 7.9** Multi-access to a reader: numerous transponders attempt to transfer data to the reader simultaneously

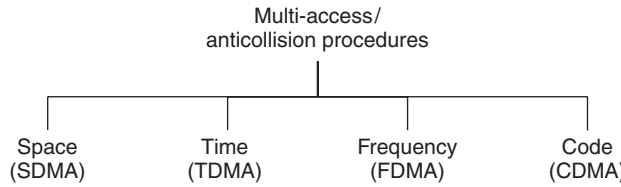


**Figure 7.10** Multi-access and anticollision procedures are classified on the basis of four basic procedures

RFID transponders, on the other hand, are characterised by brief periods of activity interspersed by pauses of unequal length. A contactless smart card in the form of a public transport travel card, which is brought within the interrogation zone of a reader, has to be authenticated, read and written within a few tens of milliseconds. There may follow a long period in which no smart cards enter the reader's interrogation zone. However, this example should not lead us to the conclusion that multi-access is not necessary for this type of application. The situation in which a passenger has two or three contactless smart cards of the same type in his wallet, which he holds up to the antenna of the reader, must be taken into account. A powerful multi-access procedure is capable of selecting the correct card and deducting the fare without any detectable delay, even in this case. The activity on a transmission channel between reader and transponder thus possesses a very high burst factor (Fliege, 1996) and we therefore also talk of a packet access procedure.

Channel capacity is only split for as long as is actually necessary (e.g. during the selection of a transponder in the reader's interrogation zone).

The technical realisation of a multi-access procedure in RFID systems poses a few challenges for transponder and reader, since it has to reliably prevent the transponders' data (packages) from colliding with each other in the reader's receiver and thus becoming unreadable, without this causing a detectable delay. In the context of RFID systems, a technical procedure (access protocol) that facilitates the handling of multi-access without any interference is called an *anticollision system*.

The fact that a data packet sent to a reader by a single transponder, e.g. by load modulation, cannot be read by all the other transponders in the interrogation zone of this reader poses a particular

challenge for almost all RFID systems. Therefore, a transponder cannot in the first instance detect the presence of other transponders in the interrogation zone of the reader.

For reasons of competition, system manufacturers are not generally prepared to publish the anticollision procedures that they use. Therefore, little can be found on this subject in the technical literature, so a comprehensive survey of this subject is, unfortunately, not possible at this point. Some examples at the end of the chapter should serve to clarify the practical realisation of anticollision procedures.

### *7.2.1 Space Division Multiple Access (SDMA)*

The term *space division multiple access* relates to techniques that reuse a certain resource (channel capacity) in spatially separated areas (Fliege, 1996).

One option is to significantly reduce the *range* of a single reader, but to compensate by bringing together a large number of readers and antennas to form an array, thus providing coverage of an area. As a result, the channel capacity of adjoining readers is repeatedly made available. Such procedures have been successfully used in large-scale marathon events to detect the run times of marathon runners fitted with transponders (see also Section 13.9). In this application a number of reader antennas are inserted into a tartan mat. A runner travelling over the mat 'carries' his transponder over the interrogation zone of a few antennas that form part of the entire layout. A large number of transponders can thus be read simultaneously as a result of the spatial distribution of the runners over the entire layout.

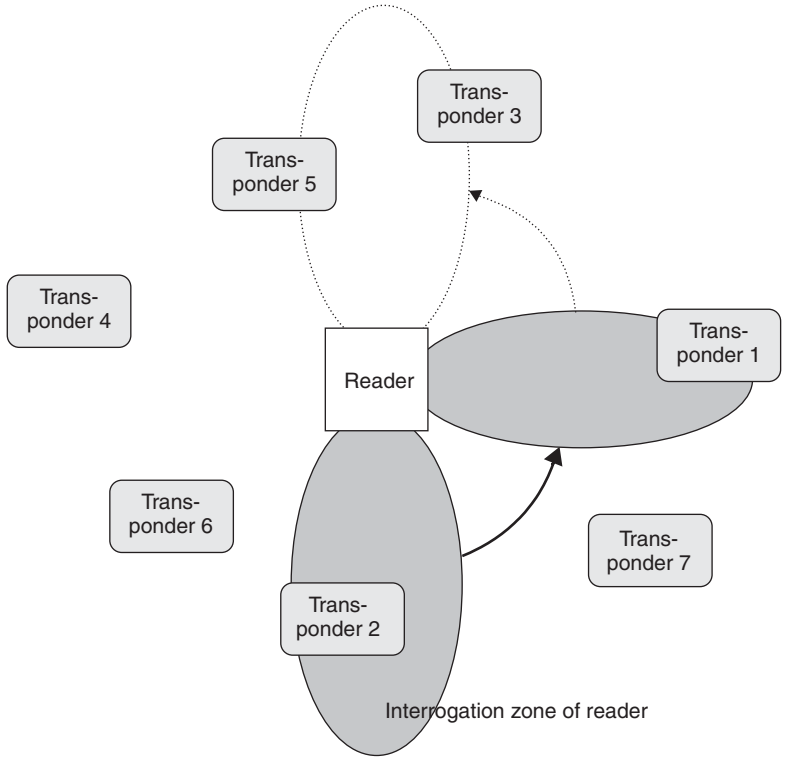


**Figure 7.11** Adaptive SDMA with an electronically controlled directional antenna. The directional beam is pointed at the various transponders one after the other

A further option is to use an electronically controlled directional antenna on the reader, the directional beam of which can be pointed directly at a transponder (adaptive SDMA). So various transponders can be differentiated by their angular position in the interrogation zone of the reader.[1] Phased array antennas are used as electronically controlled directional antennas. These consist of several dipole antennas, and therefore adaptive SDMA can only be used for RFID applications at frequencies above 850 MHz (typical 2.45 GHz) as a result of the size of the antennas. Each of the dipole elements is driven at a certain, independent phase position. The directional diagram of the antenna is found from the different superposition of the individual waves of the dipole elements in different directions. In certain directions the individual fields of the dipole antenna are superimposed in phase, which leads to the amplification of the field. In other directions the waves wholly or partially obliterate each other. To set the direction, the individual elements are supplied with an RF voltage of adjustable, variable phase by controlled phase modifiers. In order to address a transponder, the space around the reader must be scanned using the directional antenna, until a transponder is detected by the 'searchlight' of the reader.

A disadvantage of the SDMA technique is the relatively high implementation cost of the complicated antenna system. The use of this type of anticollision procedure is therefore restricted to a few specialised applications.

### 7.2.2 Frequency Domain Multiple Access (FDMA)

The term *frequency domain multiple access* relates to techniques in which several transmission channels on various carrier frequencies are simultaneously available to the communication participants.

In RFID systems, this can be achieved using transponders with a freely adjustable, anharmonic transmission frequency. The power supply to the transponder and the transmission of control signals (broadcast) takes place at the optimally suited reader frequency $f_a$. The transponders respond on one of several available response frequencies $f_1 - f_N$ (Figure 7.12). Therefore, completely different frequency ranges can be used for the data transfer from and to the transponders (e.g. reader → transponder (downlink): 135 kHz, transponder → reader (uplink): several channels in the range 433–435 MHz).

One option for load modulated RFID systems or backscatter systems is to use various independent subcarrier frequencies for the data transmission from the transponders to the reader.

One disadvantage of the FDMA procedure is the relatively high cost of the readers, since a dedicated receiver must be provided for every reception channel. This anticollision procedure, too, remains limited to a few specialised applications.

### 7.2.3 Time Domain Multiple Access (TDMA)

The term *time domain multiple access* relates to techniques in which the entire available channel capacity is divided between the participants chronologically. TDMA procedures are particularly widespread in the field of digital mobile radio systems. In RFID systems, TDMA procedures are by far the largest group of anticollision procedures. We differentiate between transponder-driven and interrogator-driven procedures.

Transponder-driven procedures function asynchronously, since the reader does not control the data transfer. This is the case, for example, in the *ALOHA procedure*, which is described in more detail in Section 7.2.4. We also differentiate between 'switched off' and 'non-switched' procedures depending upon whether a transponder is switched off by a signal from the reader after successful data transfer.

[1] If the angle between two transponders is greater than the beam width of the directional antennas used a transmission channel can be used several times.

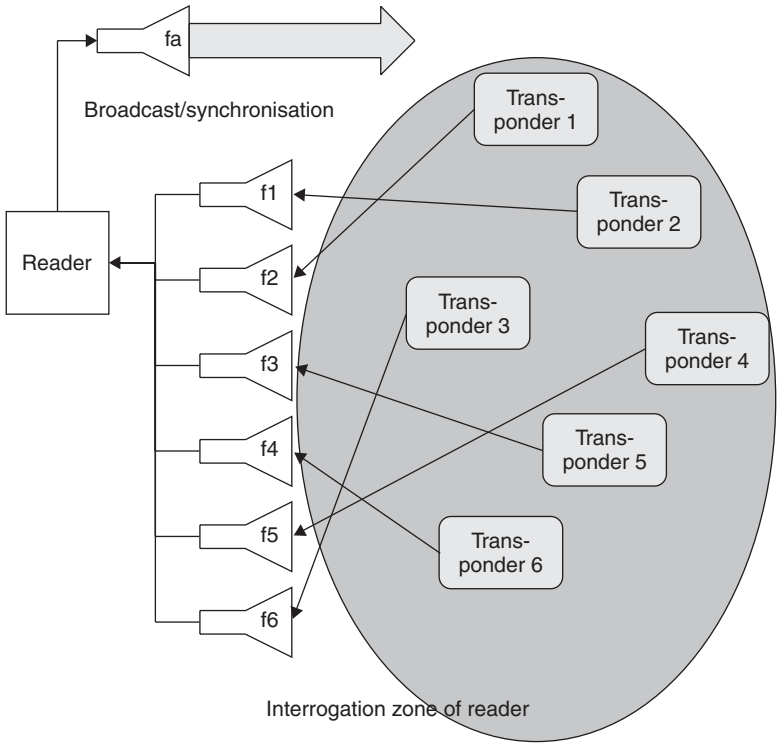


**Figure 7.12** In an FDMA procedure several frequency channels are available for the data transfer from the transponders to the reader

Transponder-driven procedures are naturally very slow and inflexible. Most applications therefore use procedures that are controlled by the reader as the master (interrogator-driven). These procedures can be considered as synchronous, since all transponders are controlled and checked by the reader simultaneously. An individual transponder is first selected from a large group of transponders in the interrogation zone of the reader using a certain algorithm and then the communication takes place between the selected transponder and the reader (e.g. authentication, reading and writing of data). Only then is the communication relationship terminated and a further transponder selected. Since only one communication relationship is initiated at any one time, but the transponders can be operated in rapid succession, interrogator-driven procedures are also known as time duplex procedures.

Interrogator-driven procedures are subdivided into *polling* and *binary search* procedures. All these procedures are based upon transponders that are identified by a unique serial number:

The polling procedure requires a list of all the transponder serial numbers that can possibly occur in an application. All the serial numbers are interrogated by the reader one after the other, until a transponder with an identical serial number responds. This procedure can, however, be very slow, depending upon the number of possible transponders, and is therefore only suitable for applications with few known transponders in the field.

Binary search procedures are the most flexible, and therefore the most common, procedures. In a binary search procedure, a transponder is selected from a group by intentionally causing a data collision in the transponder serial numbers transmitted to the reader following a *request command* from the reader. If this procedure is to succeed it is crucial that the reader is capable of determining

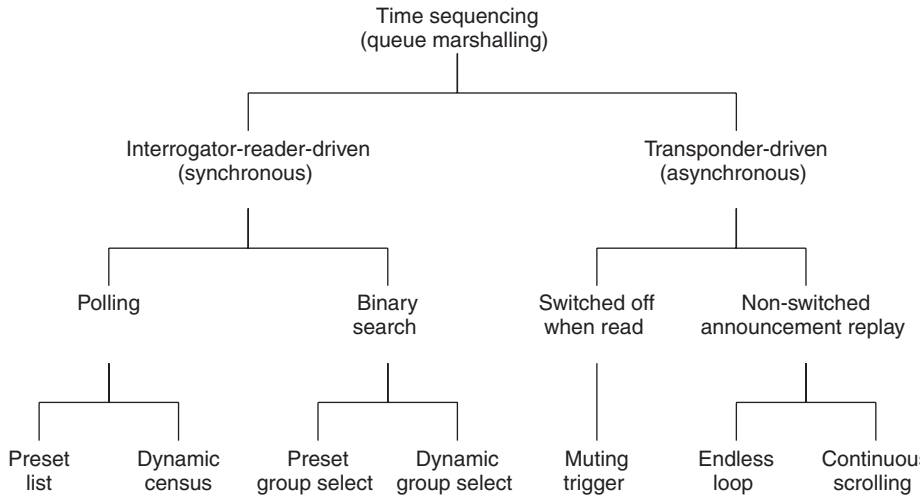


**Figure 7.13** Classification of time domain anticollision procedures according to Hawkes (1997)

the precise bit position of a collision using a suitable signal coding system. A comprehensive description of the binary search procedure is given in Section 7.2.4.

## *7.2.4 Examples of Anticollision Procedures*

In the following subsections some of the more frequently used examples of anticollision algorithms are discussed. The algorithms in the examples are intentionally simplified such that the functional principle of the algorithm can be understood without unnecessary complication.

### 7.2.4.1 ALOHA Procedure

The simplest of all the multi-access procedures is the *ALOHA* procedure, which got its name from the fact that this multi-access procedure was developed in the 1970s for ALOHANET – a radio network for data transmission on Hawaii. As soon as a data packet is available it is sent from the transponder to the reader. This is a transponder-driven stochastic TDMA procedure.

The procedure is used exclusively with read-only transponders, which generally have to transfer only a small amount of data (serial numbers), this data being sent to the reader in a cyclical sequence. The data transmission time represents only a fraction of the repetition time, so there are relatively long pauses between transmissions. Furthermore, the repetition times for the individual transponders differ slightly. There is therefore a certain probability that two transponders can transmit their data packets at different times and the data packets will not collide with one another.

The time sequence of a data transmission in an ALOHA system is shown in Figure 7.14. The offered load $G$ corresponds to the number of transponders transmitting simultaneously at a certain point in time $t_0$ (i.e. 0, 1, 2, 3, ...). The average *offered load* $G$ is the average over an observation period $T$ and is extremely simple to calculate from the transmission duration $\tau$ of a data packet:

$$G = \sum_{1}^{n} \frac{\tau_n}{T} \cdot r_n \tag{7.1}$$

where $n = 1, 2, 3, \ldots$ is the number of transponders in the system and $r_n = 0, 1, 2, \ldots$ is the number of data packets that are transmitted by transponder $n$ during the observation period.

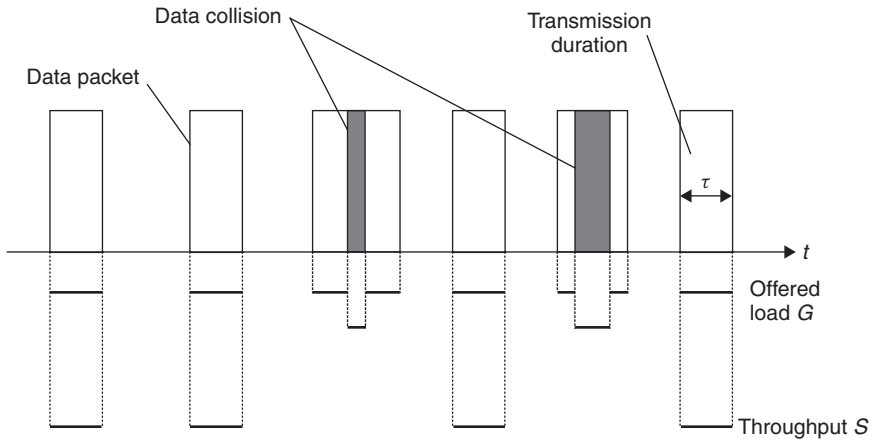


**Figure 7.14** Definition of the offered load $G$ and throughput $S$ of an ALOHA system: several transponders send their data packets at random points in time. Now and then this causes data collisions, as a result of which the (data) throughput $S$ falls to zero for the data packets that have collided

**Table 7.2** Average time consumption for reading all transponders in the interrogation zone of an example system

| Number of transponders in the interrogation zone | Average (ms) | 90 % reliability (ms) | 99.9 % reliability (ms) |
|---|---|---|---|
| 2 | 150 | 350 | 500 |
| 3 | 250 | 550 | 800 |
| 4 | 300 | 750 | 1000 |
| 5 | 400 | 900 | 1250 |
| 6 | 500 | 1200 | 1600 |
| 7 | 650 | 1500 | 2000 |
| 8 | 800 | 1800 | 2700 |

The throughput $s$ is 1 for the transmission duration of an error-free (collision-free) data packet transmission. In all other cases, however, it is 0, since data was either not transmitted or could not be read without errors due to a collision. For the (average) throughput $S$ of a transmission channel we find from the offered load $G$:

$$S = G \cdot e^{(-2G)} \tag{7.2}$$

If we consider the throughput $S$ in relation to the offered load $G$ (see Figure 7.15) we find a maximum of 18.4% at $G = 0.5$. For a smaller offered load the transmission channel would be unused most of the time; if the offered load was increased the number of collisions between the individual transponders would immediately increase sharply. More than 80% of the channel capacity thus remains unused. However, thanks to its simple implementation the ALOHA procedure is very well suited to use as an anticollision procedure for simple read-only transponder systems. Other fields of application for the ALOHA procedure are digital news networks such as packet radio, which is used worldwide by amateur radio enthusiasts for the exchange of written messages.

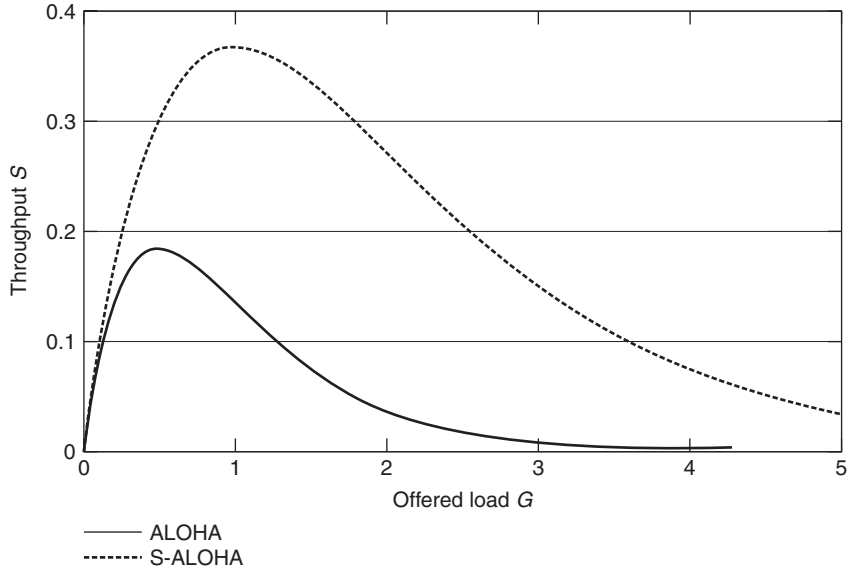


**Figure 7.15** Comparison of the throughput curves of ALOHA and S-ALOHA. In both procedures the throughput tends towards zero as soon as the maximum has been exceeded

The probability of success $q$ – the probability that an individual packet can be transmitted without collisions – can be calculated from the average offered load $G$ and the throughput $S$ (Fliege, 1996):

$$q = \frac{S}{G} = e^{(-2G)} \tag{7.3}$$

Derived from this equation, some datasheets provide figures on the time necessary to reliably read all transponders in the interrogation zone – which depends upon the number of transponders in the interrogation zone of a reader (TagMaster, 1997).

The probability $p(k)$ of $k$ error-free data packet transmissions in the observation period $T$ can be calculated from the transmission duration $\tau$ of a data packet and the average offered load $G$. The probability $p(k)$ is a Poisson's distribution with the mean value $G/\tau$:[2]

$$p(k) = \frac{\left(G \cdot \frac{T}{\tau}\right)^k}{k!} \cdot e^{\left(-G\frac{T}{\tau}\right)} \tag{7.4}$$

#### 7.2.4.2 Slotted ALOHA Procedure

One possibility for optimising the relatively low throughput of the ALOHA procedure is the *slotted ALOHA (S-ALOHA) procedure*. In this procedure, transponders may only begin to transmit data packets at defined, synchronous points in time (slots). The synchronisation of all transponders necessary for this must be controlled by the reader. This is therefore a stochastic, interrogator-driven TDMA anticollision procedure.

[2] A random number has a Poisson's distribution if it takes on the countable number of possible values $k = 0, 1, 2, \ldots$ with a probability $p(k) = \frac{\lambda^k}{k!} \cdot e^{-\lambda}$.

The period in which a collision can occur (the *collision interval*) in this procedure is only half as great as is the case for the simple ALOHA procedure.

Assuming that the data packets are the same size (and thus have the same transmission duration $\tau$) a collision will occur in the simple ALOHA procedure if two transponders want to transmit a data packet to the reader within a time interval $T \leq 2\tau$. Since, in the S-ALOHA procedure, the data packets may only ever begin at synchronous time points, the collision interval is reduced to $T = \tau$. This yields the following relationship for the throughput $S$ of the S-ALOHA procedure (Fliege, 1996).

$$S = G \cdot e^{(-G)} \tag{7.5}$$

In the S-ALOHA procedure there is a maximum throughput $S$ of 36.8% for an offered load G = 1.

However, it is not necessarily the case that there will be a data collision if several data packets are sent at the same time: if one transponder is closer to the reader than the others, that transponder may be able to override the data packets from other transponders as a result of the greater signal strength at the reader. This is known as the *capture effect*. The capture effect has a very beneficial effect upon throughput behaviour (Figure 7.16). Decisive for this is the threshold $b$, which indicates the amount by which a data packet must be stronger than others for it to be detected by the receiver without errors (Borgonovo and Zorzi, 1997; Zorzi, 1995).

$$S = G \cdot e^{\left(\frac{b \cdot G}{1+b}\right)} \tag{7.6}$$

The practical application of a slotted ALOHA anticollision procedure will now be considered in more detail on the basis of an example.

The transponder used must also have a unique *serial number* (i.e. one that has been allocated only once). In this example we use an 8-bit serial number; this means that a maximum of 256 transponders can be put into circulation if the uniqueness of serial numbers is to be guaranteed.

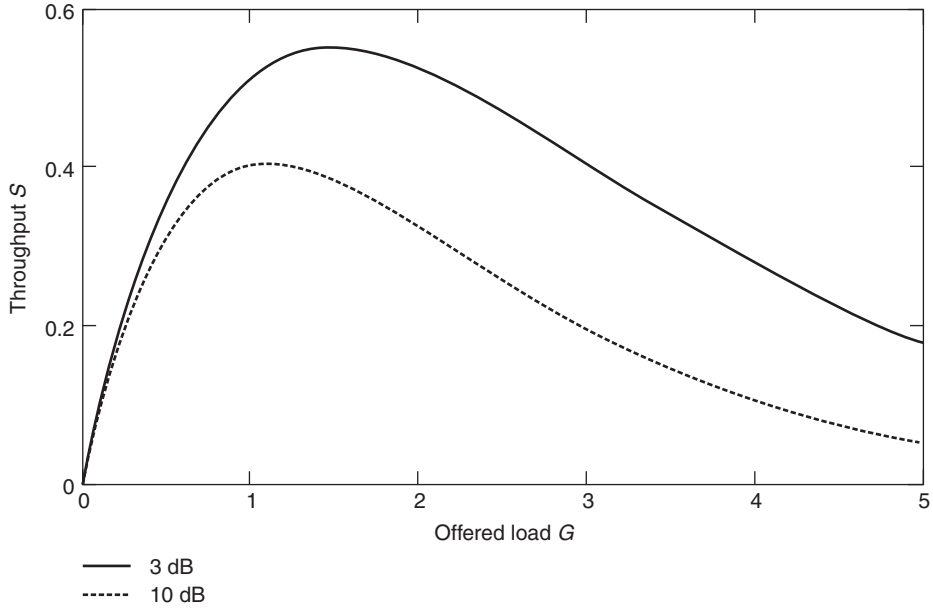


**Figure 7.16** Throughput behaviour taking into account the capture effect with thresholds of 3 and 10 dB

**Table 7.3** Command set for anticollision

| | |
|---|---|
| REQUEST | This command synchronises all transponders in the reader's interrogation zone and prompts the transponders to transmit their serial numbers to the reader in one of the time slots that follow. In our example there are always three time slots available |
| SELECT(SNR) | Sends a (previously determined) serial number (SNR) to the transponder as a parameter. The transponder with this serial number is thereby cleared to perform read and write commands (selected). Transponders with a different serial number continue to react only to a REQUEST command |
| READ_DATA | The selected transponder sends stored data to the reader. (In a real system there are also commands for writing, authentication, etc.) |

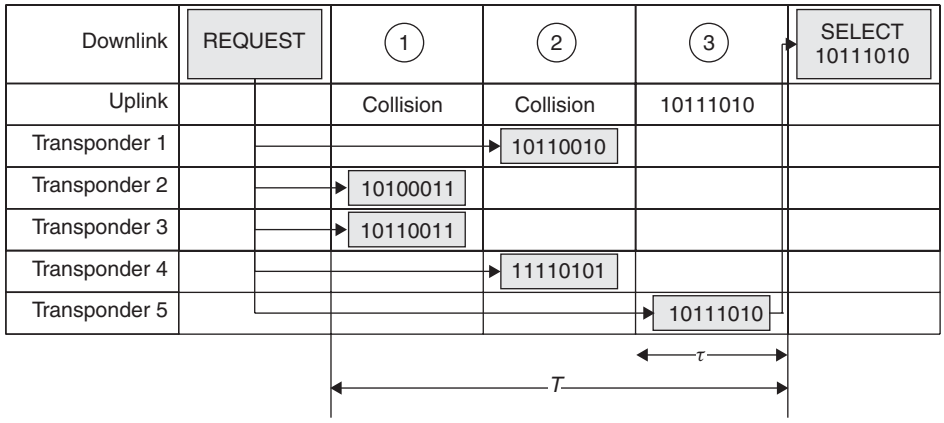


**Figure 7.17** Transponder system with slotted ALOHA anticollision procedure

We define a set of commands in order to synchronise and control the transponders.

A reader in wait mode transmits a *REQUEST command* at cyclical intervals. We now bring five transponders into the interrogation zone of a reader at the same time (Figure 7.17). As soon as the transponders have recognised the REQUEST command, each transponder selects one of the three available slots by means of a random-check generator, in order to send its own serial number to the reader. As a result of the random selection of slots in our example there are collisions between the transponders in slots 1 and 2. Only in slot 3 can the serial number of transponder 5 be transmitted without errors.

If a serial number is read without errors, then the detected transponder can be selected by the transmission of a SELECT command and then read or written without further collisions with other transponders. If no serial number were detected at the first attempt the REQUEST command is simply repeated cyclically.

When the previously selected transponder has been processed, further transponders in the interrogation zone of the reader can be sought by means of a new REQUEST command.

#### *7.2.4.2.1 Dynamic S-ALOHA Procedure*

As we have established, the throughput $S$ of an S-ALOHA system is maximised at an offered load $G$ of around 1. This means that there are the same number of transponders in the interrogation zone of the reader as there are slots available. If many further transponders are added, then the throughput quickly falls to zero. In the worst case, no serial numbers can be detected, even after an

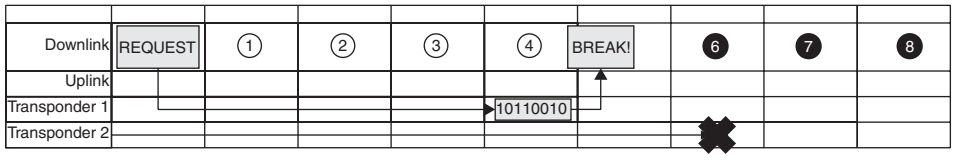


**Figure 7.18** Dynamic S-ALOHA procedure with BREAK command. After the serial number of transponder 1 has been recognised without errors, the response of any further transponders is suppressed by the transmission of a BREAK command

infinite number of attempts because no transponder succeeds in being the only one to transmit in one slot. This situation can be eased by the provision of a sufficient number of slots. However, this reduces the performance of the anticollision algorithm, since the system has to listen for possible transponders for the duration of all time slots – even if only a single transponder is located in the interrogation zone of the reader. Dynamic S-ALOHA procedures with a variable number of slots can help here.

One possibility is to transmit the number of slots (currently) available for the transponders with each REQUEST command as an argument: in wait mode the reader transmits REQUEST commands at cyclical intervals, which are followed by only one or two slots for possible transponders. If a greater number of transponders cause a bottleneck in both slots, then for each subsequent REQUEST command the number of slots made available is increased (e.g. 1, 2, 4, 8, ...) until finally an individual transponder can be detected.

However, a large number of slots (e.g. 16, 32, 48, ...) may also be constantly available. In order to nevertheless increase performance, the reader transmits a BREAK command as soon as a serial number has been recognised. Slots following the BREAK commands are 'blocked' to the transmission of transponder addresses (Figure 7.18).

#### 7.2.4.3 Binary Search Algorithm

The implementation of a binary search algorithm requires that the precise bit position of a data collision is recognised in the reader. In addition, a suitable *bit coding* is required, so we will first compare the collision behaviour of *NRZ* (non-return-to-zero) and *Manchester coding* (Figure 7.19). The selected system is an inductively coupled transponder system with load modulation by an ASK modulated subcarrier. A 1 level in the baseband coding switches the subcarrier on, and a 0 level switches it off.

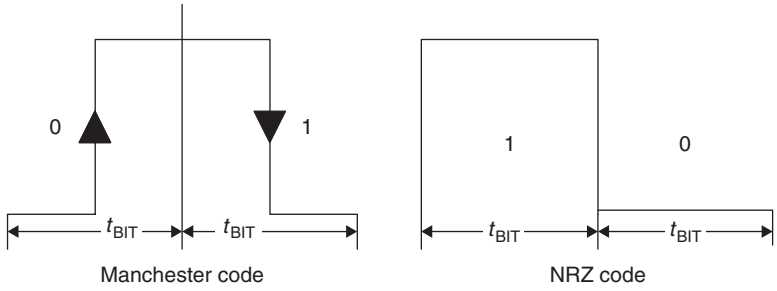


**Figure 7.19** Bit coding using Manchester and NRZ code

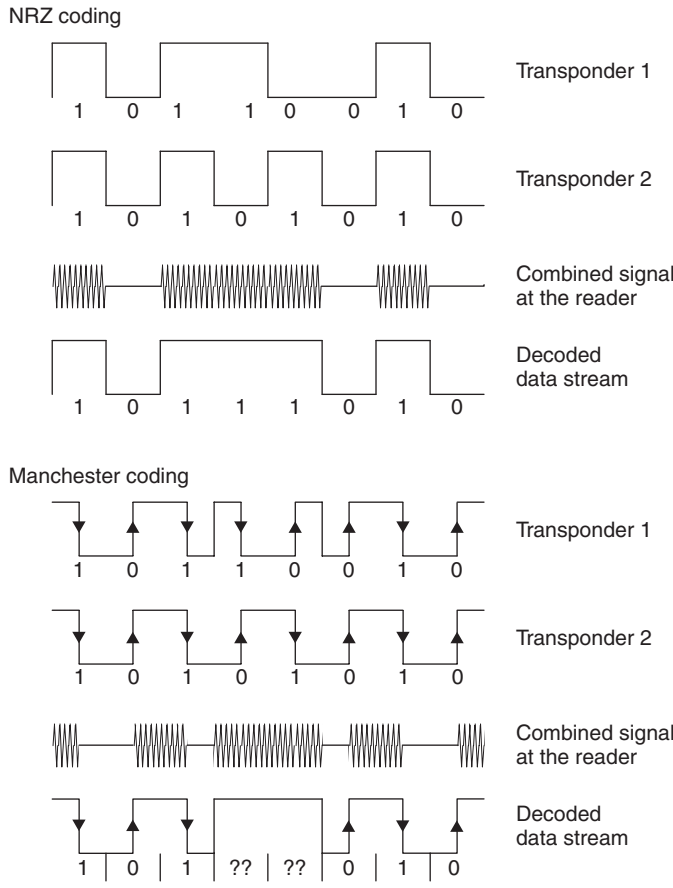


**Figure 7.20** Collision behaviour for NRZ and Manchester code. The Manchester code makes it possible to trace a collision to an individual bit

*NRZ Code*. The value of a bit is defined by the static level of the transmission channel within a bit window ($t_{BIT}$). In this example a logic 1 is coded by a static 'high' level; a logic 0 is coded by a static 'low' level.

If at least one of the two transponders sends a subcarrier signal, then this is interpreted by the reader as a 'high' level and in our example is assigned the logic value 1. The reader cannot detect whether the sequence of bits it is receiving can be traced back to the superposition of transmissions from several transponders or the signal from a single transponder. The use of a block checksum (parity, CRC) can only detect a transmission error 'somewhere' in the data block (Figure 7.20).

*Manchester code*. The value of a bit is defined by the change in level (negative or positive transition) within a bit window ($t_{BIT}$). A logic 0 in this example is coded by a positive transition; a logic 1 is coded by a negative transition. The 'no transition' state is not permissible during data transmission and is recognised as an error.

If two (or more) transponders simultaneously transmit bits of different values then the positive and negative transitions of the received bits cancel each other out, so that a subcarrier signal is received for the duration of an entire bit. This state is not permissible in the Manchester coding system and therefore leads to an error. It is thus possible to trace a collision to an individual bit (Figure 7.20).

**Table 7.4** Transponder commands for the binary search algorithm

| | |
|---|---|
| REQUEST(SNR) | This command sends a serial number to the transponder as a parameter. If the transponder's own serial number is ***less than*** (or equal to) the received serial number, then the transponder sends its own serial number back to the reader. The group of transponders addressed can thus be preselected and reduced |
| SELECT_(SNR) | Sends a (predetermined) serial number (SNR) to the transponder as a parameter. The transponder with the identical transponder address will become available for the processing of other commands (e.g. reading and writing data). This transponder is thus selected. Transponders with different addresses will thereafter only respond to a REQUEST command |
| READ_DATA | The selected transponder sends stored data to the reader. (In a real system there are also commands for authentication or writing, debiting, crediting, etc.) |
| UNSELECT | The selection of a previously selected transponder is cancelled and the transponder is 'muted'. In this state, the transponder is completely inactive and does not even respond to a REQUEST command. To reactivate the transponder, it must be reset by temporarily removing it from the interrogation zone of the reader (= no power supply) |

**Table 7.5** Serial numbers of the transponders used in this example

| | |
|---|---|
| Transponder 1 | 10110010 |
| Transponder 2 | 10100011 |
| Transponder 3 | 10110011 |
| Transponder 4 | 11100011 |

We will use Manchester coding for our binary search algorithm. Let us now turn our attention to the algorithm itself.

A binary search algorithm consists of a predefined sequence (specification) of interactions (command and response) between a reader and several transponders with the objective of being able to select any desired transponder from a large group.

For the practical realisation of the algorithm we require a set of commands that can be processed by the transponder (Table 7.4). In addition, each transponder has a unique *serial number*. In our example we are using an 8-bit serial number, so if we are to guarantee the uniqueness of the addresses (serial numbers) a maximumof 256 transponders can be issued.

The use of the commands defined in Table 7.4 in a binary search algorithm will now be demonstrated, based upon a procedure with four transponders in the interrogation zone of the reader. The transponders in our example possess unique serial numbers in the range 00–FFh (= 0–255 dec. or 00000000 – 11111111 bin.):

The first iteration of the algorithm begins with the transmission of the command REQUEST ($\leq$11111111) by the reader. The serial number 11111111b is the highest possible in our example system using 8-bit serial numbers. The serial numbers of all transponders in the interrogation zone of the reader must therefore be less than or equal to 11111111b, so this command is answered by all transponders in the interrogation zone of the reader (Figure 7.21).

The precise synchronisation of all transponders, so that they begin to transmit their serial numbers at exactly the same time, is decisive for the reliable function of the *binary tree search algorithm*. Only in this manner is the determination of the precise bit position of a collision possible.

At bit 0, bit 4 and bit 6 of the received serial number there is a collision (X) as a result of the superposition of the different bit sequences of the responding transponders. The occurrence of one or more collisions in the received serial numbers leads to the conclusion that there are two or more

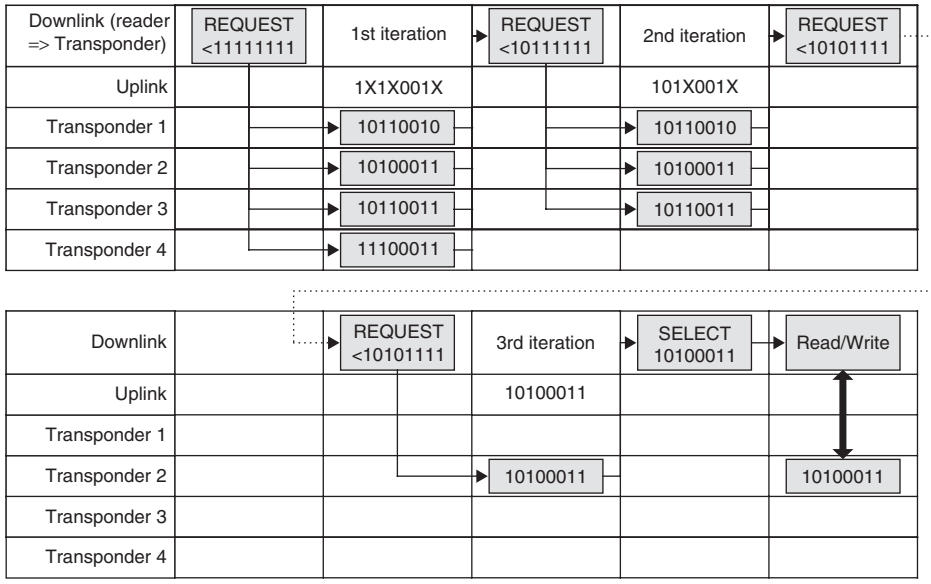


**Figure 7.21** The different serial numbers that are sent back from the transponders to the reader in response to the REQUEST command lead to a collision. By the selective restriction of the preselected address range in further iterations, a situation can finally be reached in which only a single transponder responds

**Table 7.6** Possible serial numbers after the evaluation of the received data and taking into account the collisions (X) that have occurred in the first iteration. Four of the possible transponder addresses (*)(*) actually arise in our example

| Bit number: | 7 | 6 | 5 | 4 | 3 2 1 | 0 |
|---|---|---|---|---|---|---|
| Received data in the reader | 1 | **X** | 1 | **X** | 001 | **X** |
| Possible serial number A | 1 | **0** | 1 | **0** | 001 | **0** |
| Possible serial number B* | 1 | **0** | 1 | **0** | 001 | **1** |
| Possible serial number C* | 1 | **0** | 1 | **1** | 001 | **0** |
| Possible serial number D* | 1 | **0** | 1 | **1** | 001 | **1** |
| Possible serial number E | 1 | **1** | 1 | **0** | 001 | **0** |
| Possible serial number F* | 1 | **1** | 1 | **0** | 001 | **1** |
| Possible serial number G | 1 | **1** | 1 | **1** | 001 | **0** |
| Possible serial number H | 1 | **1** | 1 | **1** | 001 | **1** |

transponders in the interrogation zone of the reader. To be more precise, the received bit sequence 1X1X001X yields eight possibilities for the serial numbers that have still to be detected (Table 7.6).

Bit 6 is the highest value bit at which a collision has occurred in the first iteration. This means that there is at least one transponder both in the range SNR $\geq$ 1**1**000000b and also in SNR $\leq$ 1**0**111111b.[3] In order to be able to select an individual transponder, we have to limit the search range for the next iteration according to the information obtained. We decide arbitrarily to continue

[3] Bit 6 is printed in bold type in each case. A careful evaluation of the results in Table 7.5 leads to the conclusion that there is at least one transponder in the ranges 11100010b–11110011b and 10100010b–10110011b.

**Table 7.7** General rule for forming the address parameter in a binary search tree. In each case, bit (X) is the highest value bit of the received transponder address in which a collision occurred in the previous iteration

| Search command | 1st iteration range | *n*th iteration range = |
|---|---|---|
| REQUEST ≥ Range | 0 | Bit(X) = 1, bit(0 to X − 1) = 0 |
| REQUEST ≤ Range | SNRmax | Bit(X) = 0, bit(0 to X − 1) = 1 |

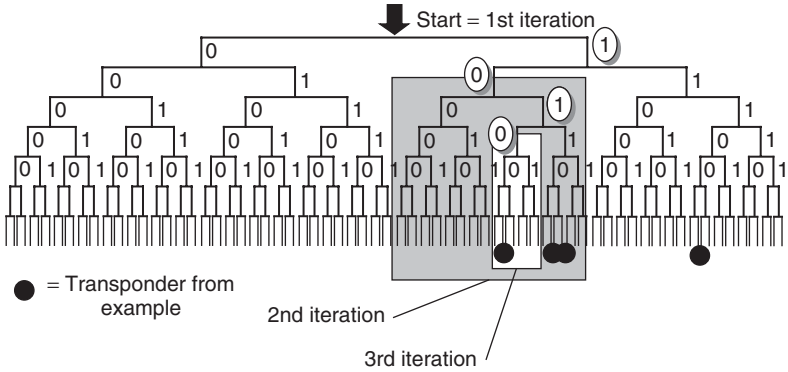


**Figure 7.22** Binary search tree. An individual transponder can finally be selected by a successive reduction of the range

our search in the range ≤ 10111111b. To do this we simply set bit 6 equal to 0 (highest value bit with collision), and ignore all lower value bits by setting them to 1.

The general rule for limiting the search area (range) is shown in Table 7.7.

After the reader has transmitted the command REQUEST (≤10111111), all transponders that fulfil this condition will respond by sending their own serial numbers to the reader. In our example these are the transponders 1, 2 and 3 (Figure 7.22). There is now a collision (**X**) at bit 0 and bit 4 of the received serial number. From this we can conclude that there are still at least two transponders in the search range of the second iteration. The received bit sequence 101**X**001**X** still permits four options for the serial numbers that remain to be detected (Table 7.8).The renewed appearance of collisions in the second iteration necessitates a further restriction of the range in a third iteration. The use of the rule in Table 7.7 leads us to the search range ≤ 10101111. The reader now transmits to the transponders the command REQUEST (≤10101111). This condition is now only fulfilled by transponder 2 (10100011), which now responds to the command alone. We have thus detected a valid serial number – a further iteration is not necessary.

By means of a subsequent SELECT command, transponder 2 is selected using the detected transponder address and can now be read or written by the reader without interference from other transponders. All other transponders are silent as only a selected transponder responds to a write/read command – READ_DATA.

After the completion of the write/read operations, transponder 2 can be fully deactivated by an UNSELECT command, so that it no longer responds to the next REQUEST command. In this manner the number of iterations necessary for the selection of an individual transponder can be gradually reduced if a large number of transponders are 'waiting' for processing in the interrogation zone of the reader. In our example, running the anticollision algorithm again would thus automatically lead to the selection of one of the previously processed transponders 1, 3 or 4.

**Table 7.8** Possible serial numbers in the search range after the evaluation of the second iteration. The transponders marked (*) are actually present

| Bit number: | 7 6 5 | 4 | 3 2 1 | 0 |
|---|---|---|---|---|
| Received data at reader | 101 | **X** | 001 | **X** |
| Possible serial number A | 101 | **0** | 001 | **0** |
| Possible serial number B* | 101 | **0** | 001 | **1** |
| Possible serial number C* | 101 | **1** | 001 | **0** |
| Possible serial number D* | 101 | **1** | 001 | **1** |

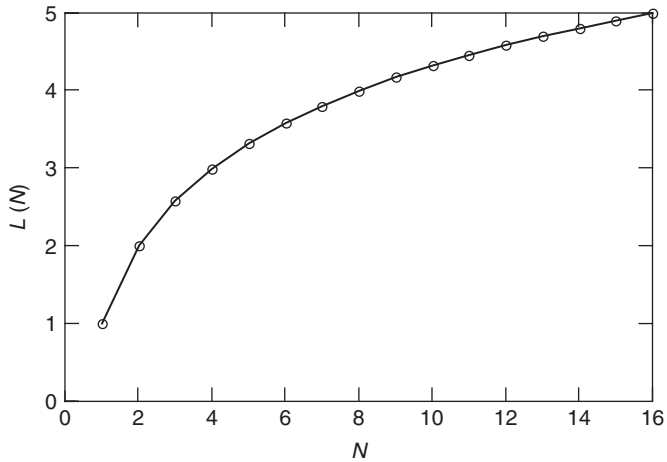


**Figure 7.23** The average number of iterations needed to determine the transponder address (serial number) of a single transponder as a function of the number of transponders in the interrogation zone of the reader. When there are 32 transponders in the interrogation zone an average of six iterations are needed, for 65 transponders on average seven iterations, for 128 transponders on average eight iterations, etc

The average number of iterations $L$ that are required to detect a single transponder from a large number depends upon the total number of transponders $N$ in the interrogation zone of the reader, and can be calculated easily:

$$L(N) = ld(N) + 1 = \frac{\log(N)}{\log(2)} + 1 \tag{7.7}$$

If only a single transponder is located in the interrogation zone of the reader, precisely one iteration is required to detect the serial number of the transponder – a collision does not occur in this case. If there is more than one transponder in the interrogation zone of the reader, then the average number of iterations increases quickly, following the curve shown in Figure 7.23.

#### *7.2.4.3.1 Dynamic Binary Search Procedure*

In the binary search procedure described above, both the search criterion and the serial numbers of the transponders are always transmitted at their full length. In practice, however, the serial numbers of transponders do not consist of one byte, as in our example, but, depending upon the system, can be up to 10 bytes long, which means that a large quantity of data must be transferred in order

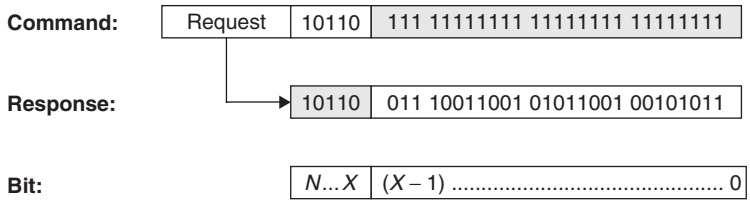


**Figure 7.24** Reader's command ($n$th iteration) and transponder's response when a 4-byte serial number has been determined. A large part of the transmitted data in the command and response is redundant (shown in grey). $X$ is used to denote the highest value bit position at which a bit collision occurred in the previous iteration

to select an individual transponder. If we investigate the data flow between the reader and the individual transponders in more detail (Figure 7.24) we find that:

- Bits $(X - 1)$ to 0 of the command contain no additional information for the transponder since they are always set to 1.
- Bits $N$ to $X$ of the serial number in the transponder's response contain no additional information for the reader, as they are already known and predetermined.

We therefore see that complementary parts of the transmitted serial numbers are redundant and actually do not need to be transmitted. This quickly leads us to an optimised algorithm. Instead of transmitting the full length of the serial numbers in both directions, the transfer of a serial number or the search criterion is now simply split according to bit ($X$). The reader now sends only the known part ($N$–$X$) of the serial number to be determined as the search criterion in the REQUEST

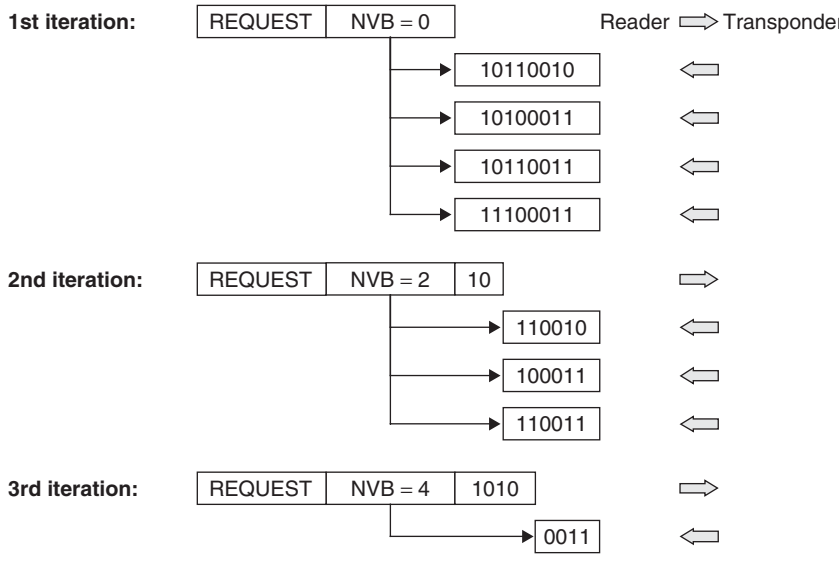


**Figure 7.25** The dynamic binary search procedure avoids the transmission of redundant parts of the serial number. The data transmission time is thereby noticeably reduced

command and then interrupts the transmission. All transponders with serial numbers that correspond to the search criterion in the bits $(N–X)$ now respond by transmitting the remaining bits, $(X - 1)$ to 0, of their serial numbers. The transponders are informed of the number of subsequent bits by an additional parameter (NVB = number of valid bits) in the REQUEST command.

Let us now illustrate in more detail the sequence of a dynamic binary search algorithm on the basis of the example in Figure 7.25. We use the same transponder serial numbers as in the previous example. Since we are applying the rule (Table 7.7) unchanged, the sequence of individual iterations corresponds with that of the previous example. In contrast, however, the amount of data to be transferred – and thus the total time needed – can be reduced by up to 50%.

# 8

# Security of RFID Systems

Similar to any other telecommunication and information technology system, RFID systems also face the potential risk of being spied out or manipulated. In order to better evaluate potential risks connected to the use of RFID systems, Section 8.1 will provide a closer look at common types of attack on RFID systems. After that, Section 8.2 will present cryptographic procedures for protecting systems from common attacks.

RFID systems rely on that external communication channels link the data registered by the reader to other data pools. However, security issues regarding the back-end of the RFID system are not specific to RFID (Rikcha, 2004). Due to the scope of this book, we will limit this discussion to attacks on the air interface between reader and transponder as well as to attacks on the transponder itself. We will not include attacks on background systems, such as databases. Looking at the *application context* in an open RFID system, we can see that it usually involves two parties with divergent interests. The *system operator* forms an active party and provides the infrastructure, i.e. the reader and background system. The active party also supplies the transponder as well as administrates and utilizes the data that is associated with or stored on the transponder. This means, it controls all data registered by the RFID system and how they are used (Rikcha, 2004).

On the other hand, we have the user of the RFID system, usually a customer or system operator employee. The users form a passive party. Even though the passive party owns the transponders (e.g. a contactless ticket, an ID or the label of a recently bought product), it is not always able to influence the use of the transponders or the utilization of the registered data (Rikcha, 2004).

In a *closed system*, e.g. manufacturing control in a company via RFID, active and passive parties are not separate. The system operator is also the user of the system. In addition, there may be a third party, such as a hacker or competitor, trying to get unauthorised access to the data stored in the transponder or in the system or even to manipulate the data to his or her personal advantage.

The large-scale introduction of RFID systems for product labels, passports and other IDs, as well as contactless tickets confront the public at large with a new and unfamiliar technology whose functionality – and thus also limits and risks – it does not really understand. The large number of different RFID systems with a huge variety of applications substantially contributes to the corresponding confusion. As with each new technology, RFID does therefore not only meet curiosity, but also fear and rejection. Similar reactions occurred, when barcodes for product labelling, the *EAN code* or the *US UPC*, were introduced in the late 1970s.

Then, and also today, the protection of the individual's *private sphere* is an important debate issue. It mainly refers to the fear that the new RFID technology could be used for the unnoticed and undesired collection of personal data, which means that the active party can spy out the private sphere. In recent years, *civil rights initiatives* and *consumer protection organizations* have tried to inform the public opinion about the potential risks related to the broad usage of RFID systems.

*RFID Handbook: Fundamentals and Applications in Contactless Smart Cards, Radio Frequency Identification and Near-Field Communication, Third Edition.* Klaus Finkenzeller
© 2010 John Wiley & Sons, Ltd

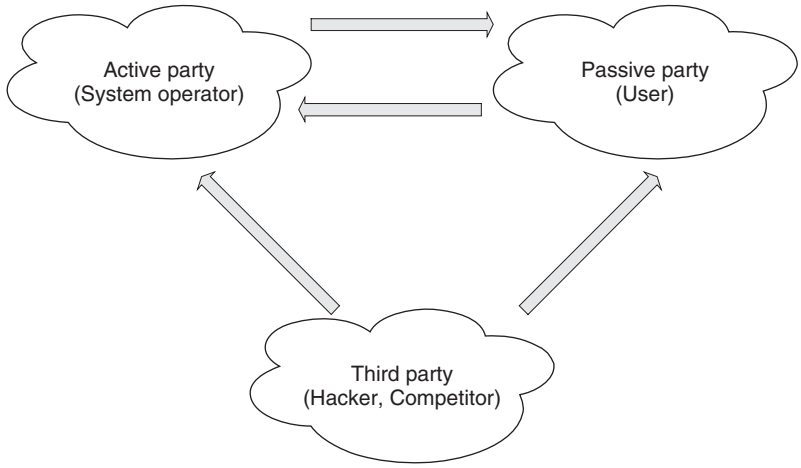


**Figure 8.1** Application context of a typical RFID system including parties with diverging interests

Some countries, particularly the United States, have repeatedly discussed the introduction of regulatory legislation for RFID applications; e.g. in January 2004, the Federal State of Missouri presented the 'RFID Right to Know Act of 2004 (SB 0867)', that has not been passed yet, though (Lahiri, 2005). The draft bill requires, among others, the clear and visible labelling of products that contain an RFID chip.

## 8.1 Attacks on RFID Systems

Figure 8.2 shows several basic types of attacks on the different components of an RFID system. In general, attacks may be directed at the transponder, reader or also at the RF interface between transponder and reader.

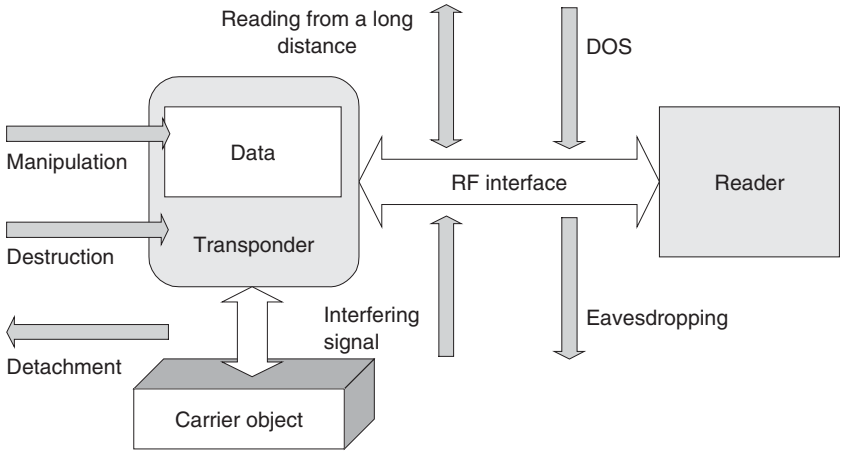


**Figure 8.2** Some basic attack options on RFID systems (according to Rikcha, 2004)

Attacks can be carried out for a variety of reasons. They can be grouped into four attack types:

- *Spying out:* The attacker tries to get unauthorized access to information and data of the active and passive file.
- *Deception:* The attacker tries to feed incorrect information into the RFID system in order to deceive the active party, i.e. the RFID system operator, or the passive party, i.e. the user of the RFID system.
- *Denial of service:* This kind of attack affects the availability of functions of the RFID system.
- *Protection of privacy:* The attacker considers the RFID system to be a threat to her privacy and tries to protect herself with attacks on the RFID system.

## *8.1.1 Attacks on the Transponder*

Usually the transponder is easily accessible. On goods and tickets it is always available to the attacker, and in most cases even without any time restrictions. Therefore, there is a wide range of attacks with varying degrees of effectiveness.

### 8.1.1.1 Permanent Destruction of the Transponder

The easiest attack on a RFID system is the mechanical or chemical *destruction of the transponder*. The antenna can be easily severed or cut off, for instance. The chip can be easily snapped or smashed.

A transponder can also be destroyed through *exposure to a strong field*. Therefore, ISO/IEC 14443 or ISO/IEC 15693 specifies a maximum field strength of 12 A/m at a frequency of 13.56 Mhz for inductively coupled transponders. If the transponder is introduced at this frequency into a field with a significantly higher field strength, the waste heat produced at the shunt regulator cannot be sufficiently dissipated any longer and the transponder will be thermally destroyed. If there is no sufficiently strong transmitter available for this frequency range, the transponder can also be put into a microwave oven.

### 8.1.1.2 Transponder Shielding/Tuning

A very efficient attack is to use metal surfaces in order to *shield* a transponder from the reader's magnetic or electromagnetic radiation. In the simplest case it is sufficient to wrap a foil around the transponder, e.g. *household aluminium foil*. For inductively coupled transponders, the antenna resonant circuit can be heavily tuned by using a metal surface in its immediate surroundings. In addition, the reader's magnetic field is dampened due to eddy-current losses in the metal foil. Therefore it is often sufficient to fasten the transponder on one side to a metal surface. It reflects the electromagnetic fields of a UHF backscatter system (e.g. 868 MHz) and efficiently keeps them away from the transponder. In the most favourable case, a passive transponder will not even be supplied with sufficient power to operate the chip.

This kind of attack can be used to temporarily disrupt transponder operation. If the shield is removed, the transponder becomes operable again without restrictions. Today, people with limited technological knowledge can use commercial products for shielding transponders (Cloaktec, n.d.).

Antennas of UHF backscatter transponders are tuned by introducing them into a *dielectric*, e.g. glass or plastics. The level of *tuning* increases with increasing capacitivity $\varepsilon_r$ and thickness of the surrounding dielectric. The tuning decreases the interrogation sensitivity of the transponder at the reader's transmitting frequency, which in turn decreases the read range of such an attacked transponder.

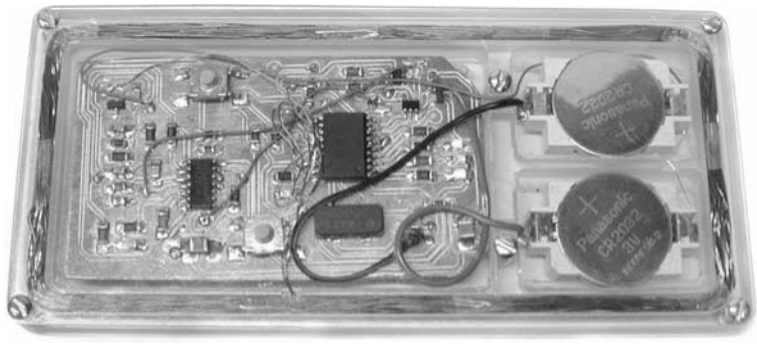

**Figure 8.3** Test set-up for skimming and cloning a 125 kHz read-only transponder (Source: Jonathan Westhues)

#### 8.1.1.3 Spoofing and Cloning of Transponders

As we will see in Sections 10.1 and 10.2, there are different complex procedures for storing information on transponders. The most basic one – the read-only transponder – has only one hard-coded identifier which is the transponder's serial number. Figure 10.10 shows the block diagram of such a simple transponder.

If a read-only transponder enters the sufficiently strong field of a reader it immediately starts to intermittently transmit its serial number which can be easily read by any suitable reader. The attacker can now use discrete components to build a read-only transponder (*transponder clone*) and replace the PROM containing the transponder's serial number with a multi-programmable memory (EPROM) or – more basically – with a series of DIP switches. If the attacker then reads out the serial number of a transponder he can program this serial number into the transponder clone. If the transponder clone is introduced into a reader's field it can send the serial number previously read out from the genuine transponder and thus pretend the presence of this genuine transponder to the reader (Westhues, 2005). The reader is not able to determine whether the currently received serial number was sent by a genuine transponder or a transponder clone. The attacker does not have to have physical access to the transponder, but only needs to use a suitable reader in order to enter the read range of the transponder to be cloned, without being detected.

Transponders with writable memories form the next level of functionality (see Section 10.1.3.2) constitute the next step. Often, *memory sections* can be read or written without any restrictions, i.e. without requiring a password or key. Also here, an attacker can easily manipulate stored data for his personal advantage or produce copies of the attacked transponder by reading data and copying them to other transponders. However, the cloning of transponders can be efficiently prevented by using authentification and encrypted data transmission (see Section 8.2.1). RFID applications that are easily accessible for attackers, such as entrance systems or ticket systems, should therefore generally avoid read-only transponders or unencrypted access to data.

## *8.1.2 Attacks on the RF Interface*

RFID systems are radio systems and communicate via electromagnetic waves in the near-field and the far-field range. An attacker is therefore likely to try and attack an RFID system via the RF interface. Such an attack is attractive as it does not require any physical access to the reader or transponder, but can be carried out from a distance. Currently, the following attacks are known and have been investigated:

- interception of the communication between reader and transponder (eavesdropping);
- interruption of the communication between reader and transponder through *jamming*;
- *extending the read range* in order to being able to skim a remote transponder, without being detected;
- blocking a reader with DOS attacks;
- undetected use of a remote transponder through a relay attack.

#### 8.1.2.1 The Interception of Communication (eavesdropping)

As RFID systems communicate with electromagnetic waves, systems can be generally *intercepted* with very basic means. The interception of the communication between reader and transponder is therefore one of the most prominent threats to RFID technology. The ranges given for RFID systems vary between a few centimetres (e.g. ISO/IEC 14443, 13.56 MHz) and several metres (ISO/IEC 18000-6, 868 MHz) and apply to the active communication which even requires the transponder to be supplied with power and to generate several volts at the antenna.

Radio receivers only need an antenna output voltage that is an order of magnitude lower in order to receive useful signals. This gives reasonable grounds to suspect that communication can be passively intercepted from a much larger distance.

Corresponding studies (Finke and Kelter, n.d.) show that at 13.56 MHz the communication of inductively coupled systems can still be intercepted at a distance of 3 m. For a *receiver bandwidth* of only a few kHz, the unmodulated carrier signal of a reader can be detected at a distance of several hundred metres. However, the successful interception of the complete communication between reader and transponder is affected by the larger receiver bandwidth required which – depending on the bitrate – can vary between some 100 kHz and several MHz. On the one hand, the input voltage required at the receiver increases with a ratio of $U_{\text{in}}$ [dB] $= \sqrt{(B_1 + B_2)}$ (Bensky, 2000) with an increasing range. On the other hand, interference increases at the same rate due to partly very strong transmitters in this shortwave frequency range.

The situation in the UHF frequency range at 868 MHz, 915 MHz or at 2.45 GHz is much more favourable as the *interception range* can be significantly improved by using beam antennas. Under very favourable conditions, the *down-link signal* of a reader should be receivable over several hundred metres, and the relatively weak *backscatter signal* of the transponder should be detectable over at least several dozen metres. However, interference may be caused by metal surfaces, i.e. fences, aluminium panels at walls, but also by large buildings in the propagation path of the waves as they shade the signals.

#### 8.1.2.2 Jamming

A very simple, but efficient method for interrupting data transmission between transponder and reader is to use *jamming* in order to send an interfering signal. When recalling the frequency spectrum of an RFID system (see Figure 3.17), we see that in addition to the reader's very strong carrier signal used by passive RFID systems for supplying the transponder with power, there occur two very weak *modulation sidebands* that are generated by the transponder's load modulation (for inductive coupling) or by modulated backscatter (for backscatter systems). In order to be able to superimpose a reader's strong carrier signal and thus interfere with data transmission from reader to transponder (down-link), distance, transmission power and antenna gain or antenna diameter, respectively (for inductive coupling) have to correspond at least to the reader that is used. As opposed to this, interfering with the transponder's weak response signal, and thus with data transmission from transponder to reader (up-link) requires much less effort.

For a backscatter system at 915 MHz and assuming an antenna gain of $G = 1$ for the reading antenna and of $G = 1.64$ (dipole) for the transponder antenna at a distance of slightly more than

3 m, the corresponding free-space attenuation will amount to 40 dB (see Table 3.7). For an effective radiated power of 4 W EIRP, the transponder still experiences a reception power of $P_e = 0.4$ mW. Therefore, power $P_s$ reflected by the transponder theoretically lies in the range of $0 < P_s < 4P_e$, i.e. it has a maximum of 1.6 mW (see Figure 4.89). If a jamming device has the same distance to the reader as the transponder and operates at the frequencies of the transponder's modulation sidebands, it requires only a transmission power of a few mW to cause significant damage.

A similar relationship applies to inductively coupled systems. It has to be taken into account, though, that the field strength curve presented in Section 4.1.1.1 also applies to jamming. This means that any jamming device has to be either positioned close enough to the reader or has to use sufficiently large antennas or transmission power.

It is important to point out, that jamming devices are radio systems and therefore, in most countries, operating such devices is illegal.

#### 8.1.2.3 Reading with Extended Read Range

*Extending the read range* of a reader might be an interesting option for an attacker. This way, the attacker may be able to read the transponder from a safe distance, without being detected. However, especially regarding the read range, technical opportunities and physical limits of RFID systems are often widely overestimated. Due to the large difference between inductive coupling and backscatter process, we will discuss these two separately.

##### *8.1.2.3.1 Inductive Coupling*

Figure 4.29 shows the equivalent circuit diagram of an inductively coupled RFID system. Current $i_1$ in the antenna coil of reader $L_1$ generates a magnetic field which is coupled to transponder coil $L_2$ through mutual inductance $M$ and induces the supply voltage of transponder $U_{Q2}$. Reversely, current $i_2$ in the transponder coil affects via magnetic mutual inductance $M$ its cause, i.e. current $i_1$. This feedback is used to transmit data from the transponder to the reader through load modulation (see also Section 4.1.10.3).

If a transponder is moved beyond the normal read range of such RFID systems, the communication can be disrupted for two different reasons. One possible reason is that the transponder simply does not receive sufficient power from its antenna to be able to operate. Another possible reason is that the transponder is supplied sufficient power to operate, but that the amplitude of the generated load modulation is no longer sufficiently large to be detected by the reader. The maximum reach of the power supply is called the *energy range* of the system; as opposed to the *load modulation range*, i.e. the maximum distance between transponder and reading antenna at which the reader still is able to detect the transponder's load modulation.

If the reader's read distance is to be increased, we have to increase the reader's energy range, too. This can be done by increasing the diameter of the reader antenna and the current in the transmitting antenna (i.e. the reader's transmission power; see also Section 4.1.1.2). There remains the problem that even for a constant distance between transponder and reader antenna, for an increasing antenna diameter of the reader antenna, magnetic mutual inductance will decrease and so will the strength of the load modulation signal. In addition, a larger transmission power of the reader will also increase the (parasitical) *noise* generated by the transmitter in the frequency range of the load modulation sidebands. Consequently, there is a rapidly reached limit that requires an increasing technological effort in order to be able to receive the transponder's load modulation signal. Kfir and Wool (2005) state that a transponder designed according to ISO/IEC 14443, which can be easily read by commercial readers from a distance of 10 cm, cannot be read from a distance larger than 40 cm, even given optimization of all parameters.

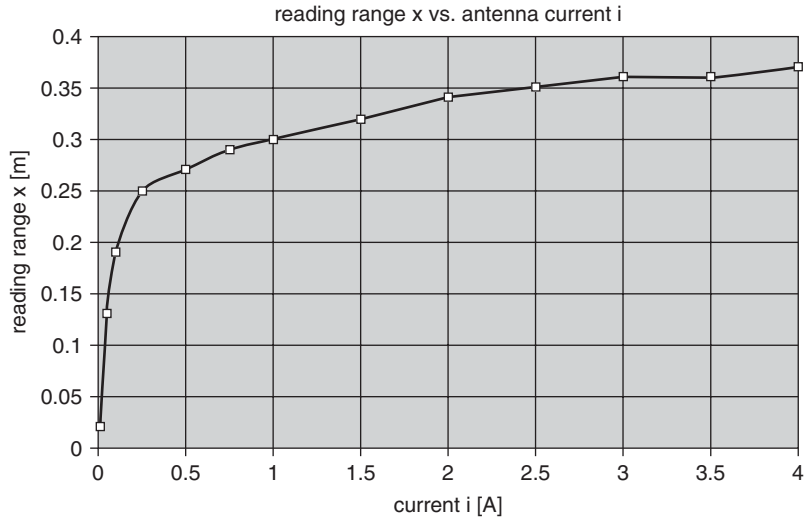


**Figure 8.4** Even for an increasing antenna current ($x$ axis) and optimized antenna diameter, the read range of an ISO/IEC 14443 system reaches its limits at a distance of 40 cm

#### *8.1.2.3.2 Backscatter Coupling*

Figure 4.76 presents the model of a passive backscatter system. We can recall that part of power $P_1$ emitted by the reader's antenna reaches the transponder's antenna, with power $P_e$ being necessary to operate the transponder. Another part of the energy is then re-radiated or reflected by the transponder's antenna as power $P_s$. A small portion $P_3$ of the reflected power eventually returns to the reader where it can be detected and demodulated.

If the transponder moves beyond the read range of the backscatter system, the communication can be disrupted for two different reasons. An obvious reason is an insufficient energy supply $P_e$ of the transponder to be operated via the antenna. However, it is just as likely that the transponder still has sufficient power to operate, but that the reflected power $P_s$ is no longer sufficiently large to be detected by the reader. For today's backscatter systems, the energy intake of the transponder chip[1], i.e. energy $P_e$ required for transponder operation, is decisive for the range of a system. We call this range the *energy range* of the system; as opposed to the backscatter range which is the theoretical range of the signal reflected by the transponder antenna.

An obvious option for increasing the range is therefore an *increased transmission power* of the reader. Looking at Equation (4.61) we see that we need to increase the transmission power of the reader fourfold in order to double the energy range. For a doubled range we need to increase the transmission power of the reader by sixteen in order to keep power $P_3$ – which returns from the transformer – at a constant level; this corresponds to Equation (4.67). A representation of the necessary transmission power as a function of energy range and backscatter range (Figure 8.5) shows that the two graphs intersect.

As mentioned before, we can assume that the range of most transponder systems is determined by the system's energy range. For a specific transmission power, the corresponding point on the energy range's straight line is situated to the left of the intersection. To the left of the intersection, the range is proportional to the square root of the transmission power. When increasing the transmission power by a factor of ten the system range may be increased by a factor of three. However, this

[1] For passive transponders.

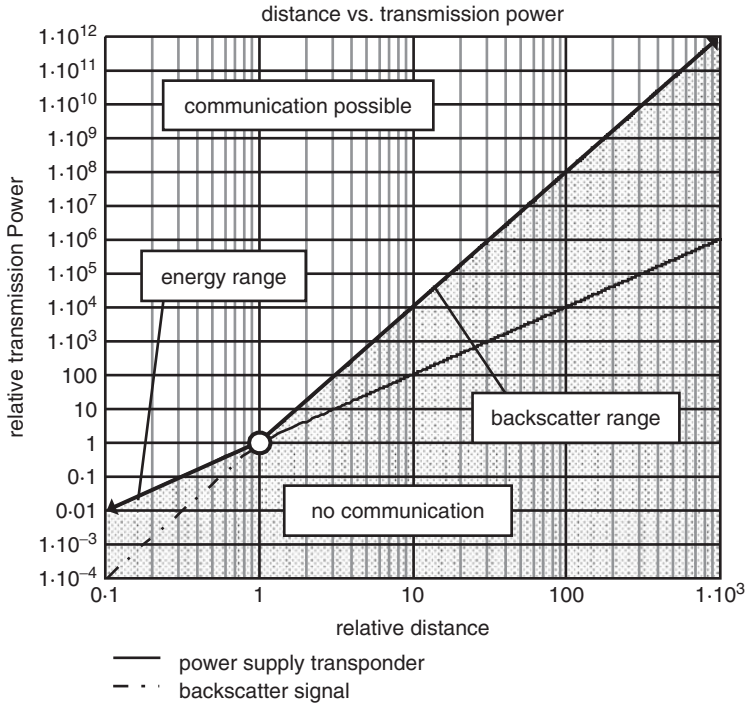


**Figure 8.5** The necessary transmission power as a function of energy range (power supply transponder) and backscatter range (backscatter signal)

only applies to the point where the two straight lines intersect. At any point to the right of the intersection, the transponder still has sufficient power to operate, however the signal reflected by the transponder soon becomes too weak to be detected by the reader. After reaching the intersection of the straight lines, we have to increase our transmission power by a factor of a hundred in order to once more increase the read range by a factor of three. In order to increase the range by a factor of 10, starting from the intersection of the two lines, we even have to increase the transmission power by a factor of 10 000. However, this causes other effects, such as an increased sideband noise around the reader's carrier signal, as well as *intermodulation products* due to nonlinearities in the simultaneously operated receiver of the reader which further reduces the theoretically possible range substantially.

Returning to Figure 4.76, we see that the antenna gain of the reading antenna enters the propagation path of the signals twice. First, power $P_2$ that reaches the transponder at distance $r$ is amplified by the antenna gain. Power $P_s$ which is reflected by the transponder is increased by the same value. The portion of reflected power $P_3$ received by the reader is once more amplified by the *antenna gain* of the reading antenna. The total effect is that both graphs in Figure 8.5 will shift to the right.

The range gained through increasing the antenna gain can be easily calculated using Equation (4.114) and is graphically presented in Figure 8.7.

Gains of up to 17 dB can be reached quite easily by using a long Yagi–Uda antenna (Rothammel, 2001). For an antenna gain of 17 dB, however, the boom would have to have a length that corresponds to almost ten times the wavelength $\lambda$, i.e. 3.4 m for 868 MHz, 3.3 m for 915 MHz or

1.2 m for 2.45 GHz. However, in this way it is possible to reach seven to eight times the read range as opposed to using a dipole antenna. According to the theory, the gain can increase by a maximum of 3 dB for a doubling of antenna length and number of elements (Rothammel, 2001). To reach an antenna gain of 20 dB and thus a tenfold read range requires at least one antenna with double length, i.e. twenty times wavelength λ. For 868 MHz, this results in a boom length of 7 m; which is rather difficult to handle. In order to reach twenty times the read range, we need an antenna gain of approximately 26 dB. This is only possible if several *long Yagi–Uda antennas* are combined into an *antenna group* which would result in an antenna monster of several metres. Attacks with long Yagi–Uda antennas have already occurred. In mid-2005, a successful attempt to read a transponder from a distance of 21 m (69 ft) led to substantial repercussions in the specialist press (Defcon, 2005; Cheung, 2005).

If the antenna gain has to be further increased in order to further extend the range, we have to use parabolic mirrors. With a gain of 40 dB, a read range that is a hundred times larger can be achieved. For 868 MHz, the required mirror diameter amounts to almost 15 m (5.1 m for 2.45 GHz). Finally, a thousandfold read range requires a gain of 60 dB which would need a *parabolic mirror* of 145 m (52 m for 2.45 GHz).

These calculations clearly illustrate what distances are feasible for an attack. The most favourable combination appears to be a long Yagi–Uda antenna together with a moderately increased transmission power of the reader. It would be reasonable to hit the intersection of both straight lines in Figure 8.6. More than twenty times the range does currently not appear to be achievable using reasonable efforts.

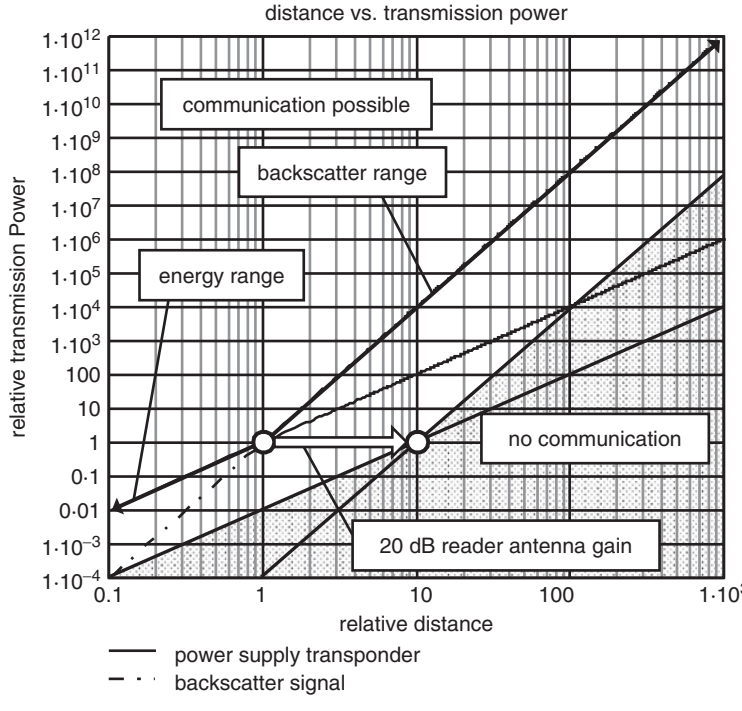


**Figure 8.6** An additional antenna gain can easily increase the system's range

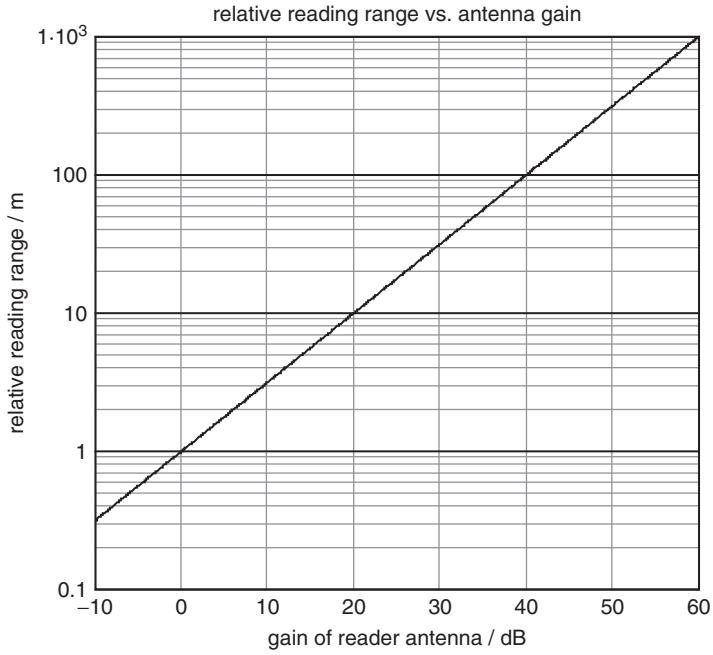


**Figure 8.7** The range of an UHF system can be efficiently increased by increasing the antenna gain

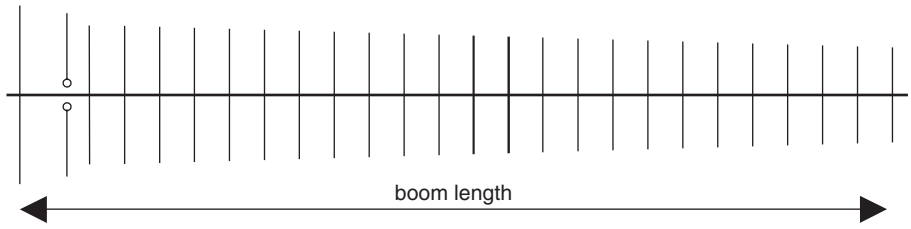


**Figure 8.8** Schematic presentation of a long Yagi–Uda antenna with 26 elements

#### *8.1.2.3.3 Denial-of-Service Attack Through Blocker Tags*

Modern RFID readers can easily communicate with a larger number of transponders within the interrogation field. Here, the reader uses an *anticollision algorithm* for selecting an individual transponder in order to communicate with this transponder. For some applications it is sufficient to determine the *serial numbers* of the transponders situated within the read range, as the corresponding data is stored in a data base (e.g. product data for an EPC).

In practice, there are mainly two established anticollision algorithms, the binary search tree algorithm and the slotted ALOHA procedure. For a more detailed description of blocker tags, see Sections 7.2.4.2 and 7.2.4.3.

As described in Chapter 7, a binary search tree uses a recursive algorithm that chooses for each collision occurring at a bit location of the received serial number a branch in the binary tree by setting the corresponding bit in the subsequent iteration to ‘0’ or ‘1’. And exactly here, the *blocker*

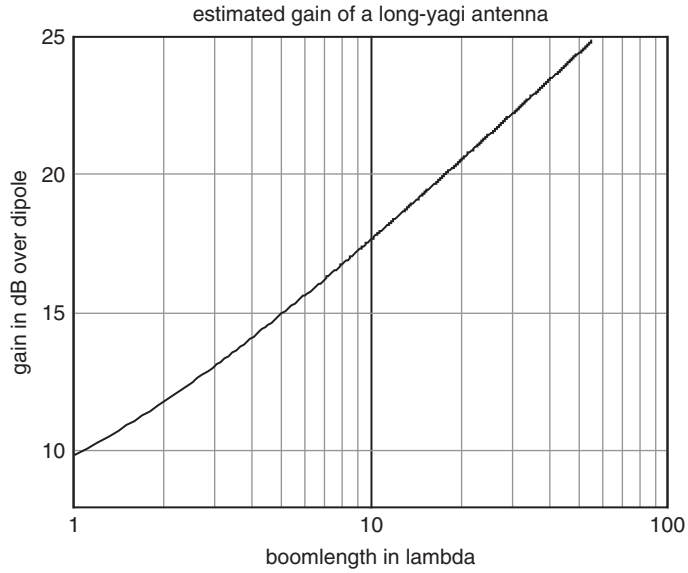


**Figure 8.9** Theoretical gain of a long Yagi–Uda antenna, measured in dB compared with a dipole antenna, in relation to the boom length in multiples of wavelength λ (Rothammel, 2001)

*tag* attacks as it simulates a collision at each bit location of the serial number by simultaneously sending '0' and '1' (compare Figure 7.20). The misled reader cannot but run through the entire binary search tree (Juels, n.d.).

The blocker tag pretends to the attacked reader that there are $2^k$ transponders within its interrogation field where $k$ is the number of bits in the serial number. Prompting such a large number of serial numbers literally blocks the affected reader. If a reader needs time $t_1$ for determining a specific serial number, running through the entire search tree requires time $t_g = t_1 \times 2^n$ where n is the number of bits of an individual serial number. Assuming that time $t_1$ is 1 ms and length $n$ of a serial number in our system is 48-bit, the reader needs $t_g = 2.8 \times 2^{11}$ for running through the entire search tree, or in years: 8925! It is obvious that it will not be possible for a reader to recognise any genuine responder in its response field; even more so as it is usually not possible to distinguish between a genuine and feigned serial number. A blocker tag that blocks the entire search tree of a reader (d*enial-of-service, DOS*) also is called *full blocker* or *universal blocker* (Juels, n.d.).

Even the widely used slotted ALOHA procedure can be easily blocked by a blocker tag. For this procedure, the anticollision command of a reader is followed by a previously defined number of slots during which the transponders located in the reader's interrogation field send their serial numbers to the reader. Here, the transponders randomly choose the used slot. If two or more transponders try to transmit their serial numbers during the same time slot, none of the serial numbers can be correctly read due to the occurring collision. A slotted ALOHA procedure can be easily interrupted if the blocker tag sends – for each available time slot – a serial number, or even easier, an invalid data package (e.g. a data package with an intentionally wrong check sum). The reader is then unable to detect any further transponder in the response field.

It is not always desirable to completely block the search tree and thus the number range of an RFID system. An EPC serial number, for instance, consists of an 8-bit header, 28-bit EPC manager code (the organisation that issued the transponder), 24-bit object manager code (designation of the object according to information from the previous EPC manager) and a 36-bit individual number.

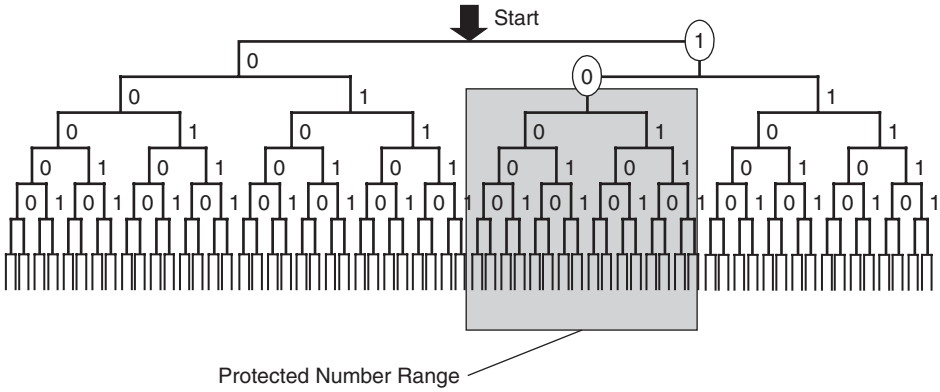


**Figure 8.10** Specific number ranges can be excluded from blocking

A blocker tag could be designed to exclude specific parts of the binary search tree from blocking. Figure 8.10 shows an example where all serial numbers of the RFID system that start with Bits "01" are excluded from blocking.

#### *8.1.2.3.4 Relay Attack*

This is a special kind of attack where the attacker can almost deliberately extend the range between reader and transponder by interposing a transmission device (relay). The attacker briefly 'borrows' the transponder and uses the relay to simulate for the reader that the transponder itself is located within the reader's interrogation range. For this, the attacker does not even require physical access to the transponder, but only has to be situated within the read range of the transponder. Usually, the owner of the transponder does not notice the attack or only a long time after the attack, for example, if the attacked transponder was used to carry out transactions that are subject to charges (e.g. shopping or train tickets).

*Relay attacks* require two different components that are linked via radio communication (Kfir and Wool, 2005; Hancke, 2005). Located close to the reader, there will be one component (*ghost, proxy*) which is able to receive the reader's signals and to generate a load modulation in order to communicate to the reader and thus to *simulate* a transponder. The second component (*leech, mole*) consists of a transmitter which is able to supply a transponder with the power required for its operation as well as to demodulate a load modulation of the transponder and thus to simulate a reader (Figure 8.11).

The simplest option is now to demodulate in the ghost the data received from the reader or transponder and then to transmit the received data stream one-to-one via radio communication to the leech, which finally sends the data stream to the transponder (Hancke, 2005). Vice versa, the interrogation data sent by the transponder will be demodulated in the leech and the data stream received will be sent one-to-one via radio communication to the ghost which, in turn, transmits the data further to the reader using load modulation (Figure 8.12). The reader assumes that the transponder really is situated within the interrogation range of the reader and that therefore a complete transaction between transponder and reader can be carried out.

The *runtimes* for the transmission of the data stream between ghost and leech increase with larger distances. Even though signals are transmitted at the speed of light, it will still take about 3 µs per kilometre in one direction. For a time-critical protocol, such as ISO/IEC 14442 Type A, this may quickly turn into a problem. If the last bit of a request or anticollision command sent

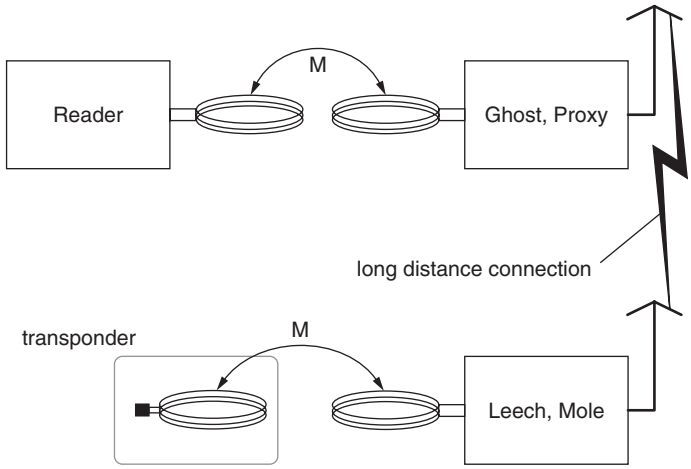


**Figure 8.11** A relay attack pretends to a reader that a remote transponder lies within the reader's read range. This way, the attacker can prompt actions that otherwise require the physical presence of the transponder close to the reader (e.g. access systems, payment systems, etc)

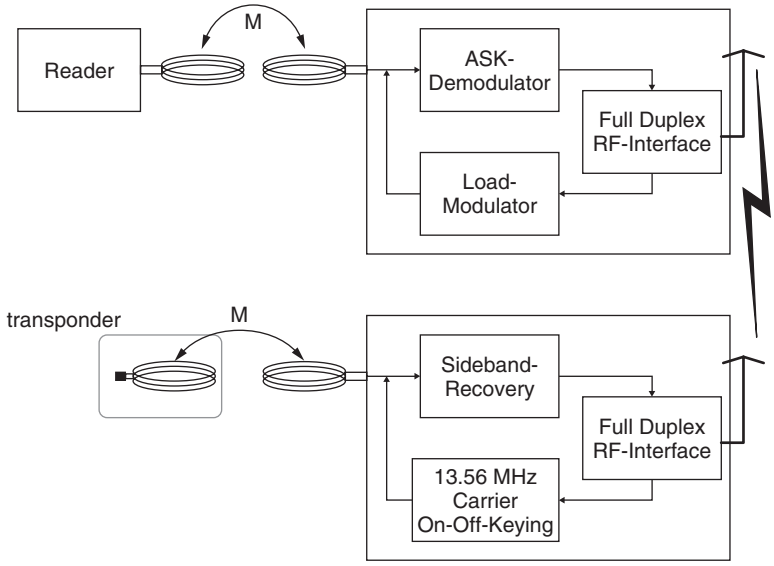


**Figure 8.12** An analogous relay system can be very easily realized by transmitting a demodulated data stream between ghost and leech

by the reader is a '1', the first bit of the transponder's response has to reach the reader at exactly 91.1 µs. The duration of one bit at the used bitrate of 106 kbit/s thus amounts to 9.43 µs. When transmitting modulation signals over a distance of one kilometre, the reader's command arrives already with a delay of 3 µs. Transmitting the response from leech to ghost will add another 3 µs delay, which means that the response of the transponder will arrive at the reader 6 µs later than

expected. This already corresponds to more than half the duration of a bit, and can result in that the response will no longer be accepted by the reader.

The duration of time-outs for sending application commands exceeds the deviations tolerated by ISO/IEC 14443 Type A for request and anticollision commands by multiples. On the other hand, the protocol for the application data is completely transparent, i.e. the application data (INF/APDU) are packaged in a protocol layer, but are never changed, as illustrated in Figure 9.28 for instance. For this reason, it is possible to implement the complete *protocol stack* of a transponder in the ghost. The ghost itself can then process time-critical commands, such as requests or anticollision commands, without the need for any interaction with the leech or the transponder to be attacked. Similarly, it is possible to build on the leech-side such a communication link to the transponder without having to initially communicate with the ghost. If the ghost finally receives a data block, only the application data contained therein (APDU) will be transmitted to the leech which, in turn, will package them into a complete data block (Figure 9.28) and send them on to the transponder. A similar process is used for the reverse transmission direction. The duration of *time-out* for application commands usually amounts to some 10–100 ms, which means that transmission time between ghost and leech are hardly important any longer. This way, attackers can bridge very large distances. Even partial data transmission in the Internet is feasible.

Relay attacks using protocol stacks in ghost and leech are hard to discover due to the usually strict separation of protocol and application data (APDU). It would require a procedure that suspends this strict separation and, for instance, includes status information of the protocol layer into the *authentification* of transponder and reader (see Section 8.2.1) (Hancke and Kuhn, 2005).

## 8.2 Protection by Cryptographic Measures

RFID systems are increasingly being used in high-security applications, such as access systems and systems for making payments or issuing tickets. However, the use of RFID systems in these applications necessitates the use of security measures to protect against *attempted attacks*, in which people try to trick the RFID system in order to gain unauthorised access to buildings or avail themselves of services (tickets) without paying. For details regarding the technical possibilities see Section 8.1.

For centuries myths and fairy tales have sought to find examples of attempts to outsmart *security systems*. For example, *Ali Baba* was able to gain access to the supposedly secure hideout of the Forty Thieves by discovering the secret password. Modern *authentication protocols* also work by checking knowledge of a secret (i.e. a cryptographic key). However, suitable algorithms can be employed to prevent the secret key being cracked. High-security RFID systems must have a defence against the following individual attacks:

- skimming of a data carrier in order to clone and/or modify data;
- placing a foreign data carrier within the interrogation zone of a reader with the intention of gaining unauthorised access to a building or receiving services without payment;
- eavesdropping on radio communications and replaying the data, in order to imitate a genuine data carrier (‘replay and fraud’).

When selecting a suitable RFID system, consideration should be given to cryptological functions. Applications that do not require a security function (e.g. industrial automation, tool recognition) would be made unnecessarily expensive by the incorporation of cryptological procedures. On the other hand, in high-security applications (e.g. ticketing, payment systems) the omission of cryptological procedures can be a very expensive oversight if manipulated transponders are used to gain access to services without authorisation.

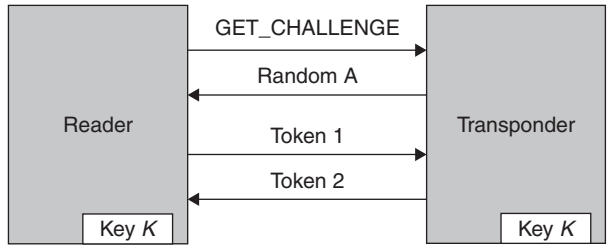


**Figure 8.13** Mutual authentication procedure between transponder and reader

## *8.2.1 Mutual Symmetrical Authentication*

Mutual authentication between reader and transponder is based upon the principle of three-pass mutual authentication in accordance with *ISO/IEC 9798-2*, in which both participants in the communication check the other party's knowledge of a secret *cryptological key*.

In this procedure, all the transponders and receivers that form part of an application are in possession of the same secret *cryptological key* $K$ ($\rightarrow$ symmetrical procedure). When a transponder first enters the interrogation zone of a reader it cannot be assumed that the two participants in the communication belong to the same application. From the point of view of the reader, there is a need to protect the application from *manipulation* using falsified data. Likewise, on the part of the transponder there is a need to protect the stored data from skimming or overwriting.

The mutual authentication procedure begins with the reader sending a GET_CHALLENGE command to the transponder. A *random number* $R_A$ is then generated in the transponder and sent back to the reader (response $\rightarrow$ challenge–response procedure). The reader now generates a random number $R_B$. Using the common secret key $K$ and a common key algorithm $e_k$, the reader calculates an encrypted data block (token 1), which contains both random numbers and additional control data, and sends this data block to the transponder.

$$\text{Token1} = e_K(R_B||R_A||ID_A||\text{Text1}) \tag{8.1}$$

The received token 1 is decrypted in the transponder and the random number $R'_A$ contained in the plain text is compared with the previously transmitted $R_A$. If the two figures correspond, then the transponder has confirmed that the two common keys correspond. Another random number $R_{A2}$ is generated in the transponder and this is used to calculate an encrypted data block (token 2), which also contains $R_B$ and control data. Token 2 is sent from the transponder to the reader.

$$\text{Token2} = e_K(R_{A2}||R_B||\text{Text2}) \tag{8.2}$$

The reader decrypts token 2 and checks whether $R_B$, which was sent previously, corresponds with $R'_B$, which has just been received. If the two figures correspond, then the reader is satisfied that the common key has been proven. Transponder and reader have thus ascertained that they belong to the same system and furthercommunication between the two parties is thus legitimised.

To sum up, the mutual authentication procedure has the following advantages:

- The secret keys are never transmitted over the airwaves, only encrypted random numbers are transmitted.
- Two random numbers are always encrypted simultaneously. This rules out the possibility of performing an inverse transformation using $R_A$ to obtain token 1, with the aim of calculating the secret key.

- The token can be encrypted using any algorithm.
- The strict use of random numbers from two independent sources (transponder, reader) means that recording an authentication sequence for playback at a later date (replay attack) would fail.
- A random key (session key) can be calculated from the random numbers generated, in order to cryptologically secure the subsequent data transmission.

### *8.2.2 Authentication using Derived Keys*

One disadvantage of the authentication procedure described in Section 8.1 is that all transponders belonging to an application are secured using an identical cryptological key $K$. For applications that involve vast quantities of transponders (e.g. the ticketing system for the public transport network, which uses several million transponders) this represents a potential source of danger. Because such transponders are accessible to everyone in uncontrolled numbers, the small probability that the key for a transponder will be discovered must be taken into account. If this occurred, the procedure described above would be totally open to manipulation.

A significant improvement on the authentication procedure described can be achieved by securing each transponder with a different cryptological key. To achieve this, the serial number of each transponder is read out during its production. A key $K_X$ is calculated (→ derived) using a cryptological algorithm and a *master key* $K_M$, and the transponder is thus initialised. Each transponder thus receives a key linked to its own ID number and the master key $K_M$.

The mutual authentication begins by the reader requesting the ID number of the transponder. In a special security module in the reader, the *SAM* (security authentication module), the transponder's specific key is calculated using the master key $K_M$, so that this can be used to initiate the authentication procedure. The SAM normally takes the form of a smart card with contacts incorporating a cryptoprocessor, which means that the stored master key can never be read.

### *8.2.3 Encrypted Data Transfer*

Chapter 7 described methods of dealing with interference caused by physical effects during data transmission. Let us now extend this model to a potential attacker. We can differentiate between two basic types of attack. Attacker 1 behaves passively and tries to eavesdrop on the transmission to discover confidential information for wrongful purposes. Attacker 2, on the other hand, behaves actively to manipulate the transmitted data and alter it to his benefit (see Figure 8.3).

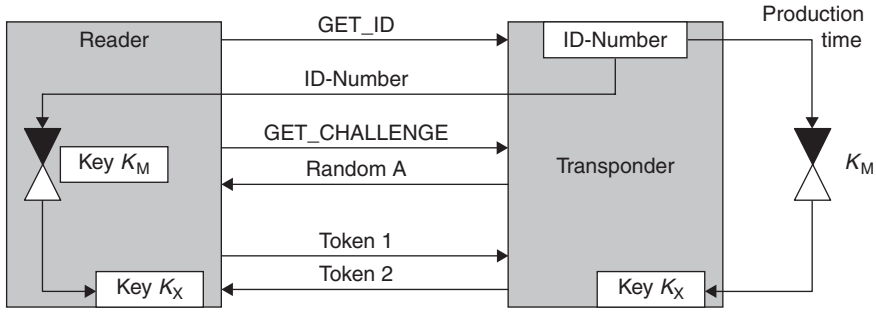


**Figure 8.14** In an authentication procedure based upon derived keys, a key unique to the transponder is first calculated in the reader from the serial number (ID number) of the transponder. This key must then be used for authentication

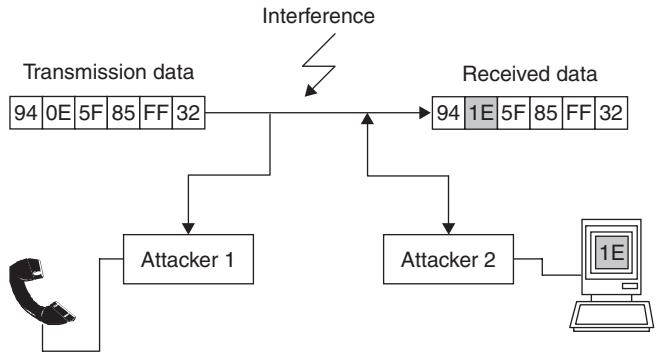


**Figure 8.15** Attempted attacks on a data transmission. Attacker 1 attempts to eavesdrop, whereas attacker 2 maliciously alters the data

The cipher data is transformed back to its original form in the receiver using the secret key $K'$ and the secret algorithm ($\rightarrow$ *decryption*, *deciphering*).

Cryptological procedures are used to protect against both passive and active attacks. To achieve this, the transmitted data (plain text) can be altered (encrypted) prior to transmission so that a potential attacker can no longer draw conclusions about the actual content of the message (plain text).

*Encrypted data transmission* always takes place according to the same pattern. The transmission data (plain text) is transformed into cipher data (cipher text) ($\rightarrow$ *ncryption*, *ciphering*) using a secret *key* $K$ and a cryptographical algorithm. Without knowing the encryption algorithm and the secret key $K$ a potential attacker is unable to interpret the recorded data. It is not possible to recreate the transmission data from the cipher data.

If the keys $K$ for ciphering and $K'$ for deciphering are identical ($K = K'$) or in a direct relationship to each other, the procedure is a *symmetrical key procedure*. If knowledge of the key $K$ is irrelevant to the deciphering process, the procedure is an *asymmetrical key procedure*. RFID

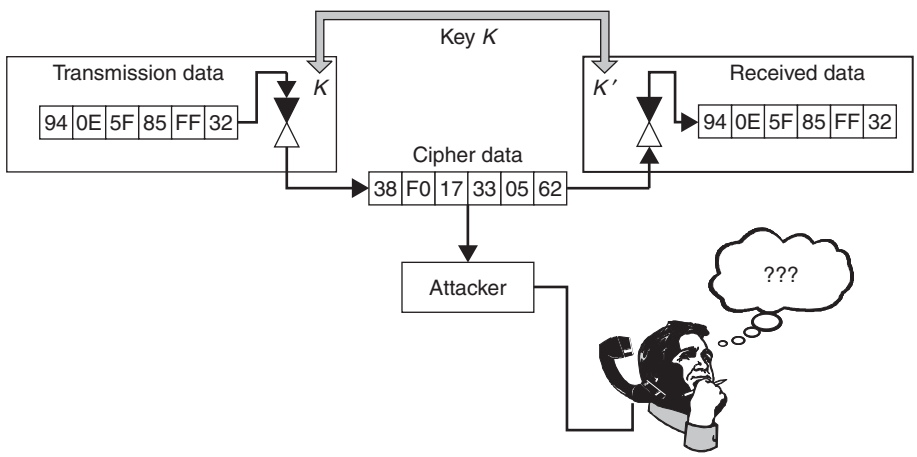


**Figure 8.16** By encrypting the data to be transmitted, this data can be effectively protected from eavesdropping or modification

systems have for a long time used only symmetrical procedures, therefore we will not describe other procedures in further detail here.

If each character is individually encrypted prior to transmission, the procedure is known as *sequential ciphering* (or *stream ciphering*). If, on the other hand, several characters are incorporated into a block then we talk of a block cipher. Because block ciphers are generally very calculation intensive, they play a less important role in RFID systems. Therefore the emphasis is placed on sequential ciphers in what follows.

A fundamental problem of all cryptological procedures is the secure distribution of the secret key $K$, which must be known by the authorised communication participants prior to the start of the data transfer procedure.

#### 8.2.3.1 Stream Cipher

Sequential ciphers or stream ciphers are encryption algorithms in which the sequence of plain text characters is encrypted sequentially using a different function for every step (Fumy, 1994). The ideal realisation of a stream cipher is the so-called *one-time pad*, also known as the *Vernam cipher* after its discoverer (Longo, 1993).

In this procedure a random key $K$ is generated, for example using dice, prior to the transmission of encrypted data, and this key is made available to both parties (Figure 8.17). The key sequence is linked with the plain text sequence by the addition of characters or using XOR gating. The random sequence used as a key must be at least as long as the message to be encrypted, because periodic repetitions of a typically short key in relation to the plain text would permit cryptoanalysis and thus an attack on the transmission. Furthermore, the key may only be used once, which means that an extremely high level of security is required for the secure distribution of keys. Stream ciphering in this form is completely impractical for RFID systems.

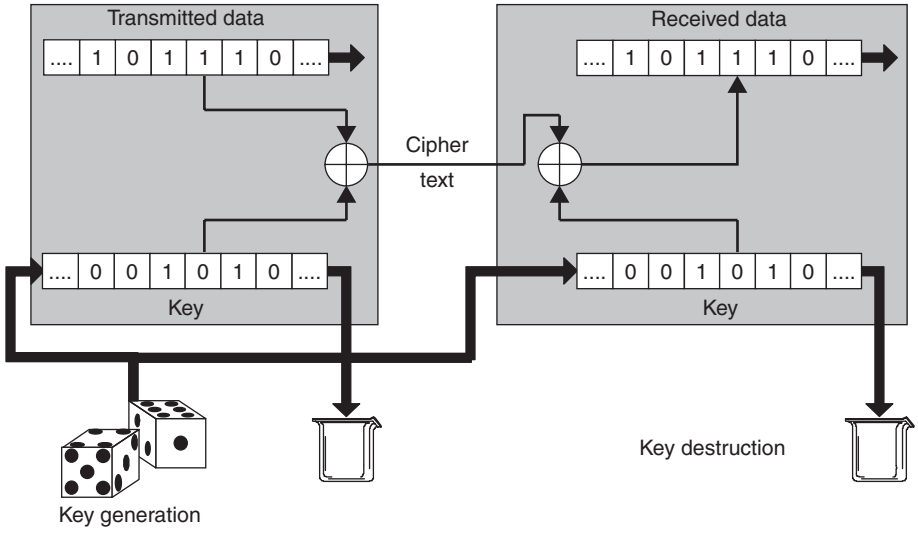


**Figure 8.17** In the one-time pad, keys generated from random numbers (dice) are used only once and then destroyed (wastepaper basket). The problem here is the secure transmission of the key between transmitter and recipient

To overcome the problem of key generation and distribution, systems have been created based upon the principle of the one-time pad stream cipher, that use a so-called *pseudorandom sequence* instead of an actual random sequence. Pseudorandom sequences are generated using so-called pseudorandom generators.

Figure 8.18 shows the fundamental principle of a sequential cipher using a pseudorandom generator: because the encryption function of a sequential cipher can change (at random) with every character, the function must be dependent not only upon the current input character, but also upon an additional feature, the internal state $M$. This internal state $M$ is changed after every encryption step by the state transformation function $g(K)$. The pseudorandom generator is made up of the components $M$ and $g(K)$. The security of the cipher depends principally upon the number of internal states $M$ and the complexity of the transformation function $g(K)$. The study of sequential ciphers is thus primarily concerned with the analysis of pseudorandom generators.

The *encryption function* $f(K)$ itself, on the other hand, is generally very simple and can only comprise an addition or XOR logic gating (Fumy, 1994; Glogau, 1994).

From a circuitry point of view, pseudorandom generators are realised by state machines. These consist of binary storage cells, so-called flip-flops. If a state machine has $n$ storage cells then it can take on $2^n$ different internal $M$ states. The state transformation function $g(K)$ is represented by combinatorial logic (a more detailed explanation of the functionality of state machines can be

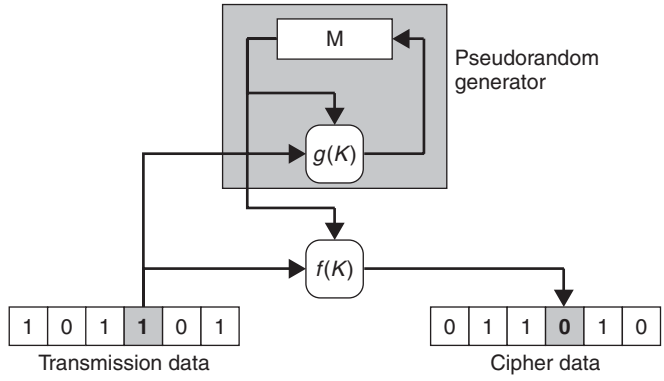


**Figure 8.18** The principle underlying the generation of a secure key by a pseudorandom generator

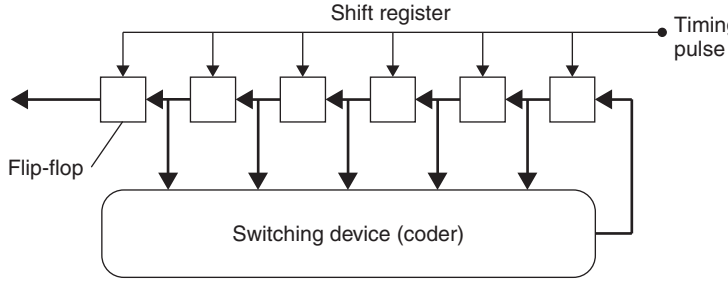


**Figure 8.19** Basic circuit of a pseudorandom generator incorporating a linear feedback shift register (LFSR)

found in Chapter 10). The implementation and development of pseudorandom generators can be greatly simplified if we restrict ourselves to the use of linear feedback shift registers.

A shift register is realised by the serial connection of flip-flops ($output_n$ is connected with $input_{n+1}$) and the parallel connection of all timing inputs. The content of the flip-flop cell is shifted forwards by one position with every timing pulse. The content of the last flip-flop is output (Golomb, 1982; Rueppel, 1986).

# 9

# Standardisation

The development of standards is the responsibility of the technical committee of different standardization institutes. The ISO (International Organisation for Standardization) is a worldwide union of national standardisation institutions, such as DIN (Germany) and ANSI (USA) and contributes with numerous committees and working groups to the development of RFID standards.

The description of standards in this chapter merely serves to aid our technical understanding of the RFID applications dealt with in this book and no attempt has been made to describe the standards mentioned in their entirety. Furthermore, standards are updated from time to time and are thus subject to change. When working with the RFID applications in question the reader should not rely on the parameters specified in this chapter. We recommend that copies of the original versions in question are procured. The necessary addresses are listed in Section 14.2.

## 9.1 Animal Identification

ISO standards 11784, 11785 and 14223 deal with the *identification of animals* using RFID systems.

- *ISO/IEC 11784:* Radio-frequency identification of animals – Code structure
- *ISO/IEC 11785:* Radio-frequency identification of animals – Technical concept
- *ISO/IEC 14223:* Radio-frequency identification of animals – Advanced transponders:
  Part 1: Air interface
  Part 2: Code and command structure
  Part 3: Applications

The constructional form of the transponder used is not specified in the standards and therefore the form can be designed to suit the animal in question. Small, sterile glass transponders that can be injected into the fatty tissues of the animal are normally used for the identification of cows, horses and sheep. Ear tags or collars are also possible.

### *9.1.1 ISO/IEC 11784 – Code Structure*

The *identification code for animals* comprises a total of 64 bits (8 bytes). Table 9.1 shows the significance of the individual bits. The national identification code should be managed by the individual countries. Bits 27 to 64 may also be allocated to differentiate between different animal types, breeds, regions within the country, breeders, etc., but this is not specified in this standard.

*RFID Handbook: Fundamentals and Applications in Contactless Smart Cards, Radio Frequency Identification and Near-Field Communication, Third Edition.* Klaus Finkenzeller
© 2010 John Wiley & Sons, Ltd

**Table 9.1** Identification codes for animals

| Bit number | Information | Description |
|---|---|---|
| 1 | Animal (1)/non-animal application (0) | Specifies whether the transponder is used for animal identification or for other purposes |
| 2–15 | Reserved | Reserved for future applications |
| 16 | Data block (1) follows/no data block (0) | Specifies whether additional data will be transmitted after the identification code |
| 17–26 | Country code as per ISO/IEC 3166 | Specifies the country of use (the code 999 describes a test transponder) |
| 27–64 | National identification code | Unique, country-specific registration number |

## *9.1.2 ISO/IEC 11785 – Technical Concept*

This standard defines the transmission method for the transponder data and the reader specifications for activating the data carrier (transponder). A central aim in the development of this standard was to facilitate the interrogation of transponders from an extremely wide range of manufacturers using a common reader. A reader for *animal identification* in compliance with the standard recognises and differentiates between transponders that use a full/half-duplex system (load modulation) and transponders that use a sequential system.

### 9.1.2.1 Requirements

The standard specifies the operating frequency for the reader as $134.2 \pm 1.8$ kHz. The emitted field provides a power supply for the transponder and is therefore termed the 'activation field'.

The *activation field* is periodically switched on for 50 ms at a time and then switched off for 3 ms (1 in Figure 9.1). During the 50 ms period when it is switched on it waits for the response from a full/half-duplex transponder – a sequential transponder in the field requires the activation field to charge up its charging capacitor.

If a full/half-duplex transponder is present within the range of the *activation field*, then this transponder sends its data during the operating interval of the field (2 in Figure 9.1). While data is being received the operating interval can be extended to 100 ms if the data transfer is not completed within the first 50 ms.

A sequential transponder in the range of the activation field (3 in Figure 9.1) begins to transmit data within the 3 ms pause. The duration of the pause is extended to a maximum of 20 ms to permit the complete transmission of a data record.

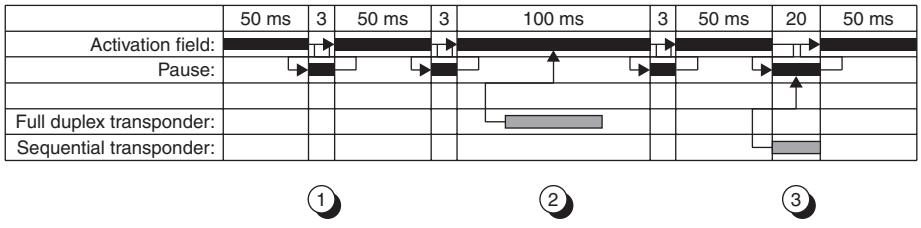


**Figure 9.1** Path of the activation field of a reader over time: ① no transponder in interrogation zone; ② full/half-duplex (= load modulated) transponder in interrogation zone; ③ sequential transponder in the interrogation zone of the reader

If portable or stationary readers are operated in the vicinity of one another, then there is a high probability that a reader will emit its activation field during the 3 ms pause of the other reader. This would result in neither of the readers being able to receive the data signal of a sequential transponder. Due to the relatively strong activation field in comparison to the field strength of a sequential transponder this effect occurs in a multiple of the reader's normal read radius. Appendix C of the standard therefore describes procedures for the *synchronisation* of several readers to circumvent this problem.

Portable and stationary readers can be tested for the presence of a second reader (B in Figure 9.2) in the vicinity by extending the pause duration to 30 ms. If the activation field of a second reader (B) is received within the 30 ms pause, then the standard stipulates that the activation field of the reader (A) should be switched on for a maximum of 50 ms as soon as the previously detected reader (B) switches its activation field on again after the next 3 ms pause. In this manner, a degree of synchronisation can be achieved between two neighbouring readers. Because data is only transmitted from the transponder to the reader (and the activation field thus always represents an unmodulated RF field), an individual transponder can be read by two portable readers simultaneously. To maintain the stability of the synchronisation, every tenth pause cycle is extended from 3 to 30 ms to detect any other readers that have recently entered the area.

Stationary readers also use a *synchronisation cable* connected to all readers in the system. The synchronisation signal at this cable is a simple logic signal with low and high levels. The resting state of the cable is a logic low level.

If one of the connected readers detects a transponder, then the synchronisation cable switches to the high level while data is transmitted from the transponder to the reader. All other readers extend their current phase (activation/pause).

If the detected data carrier is a full/half-duplex transponder, then the synchronised readers are in the 'activation field' phase. The activation period of the activation field is now extended until the synchronisation cable is once again switched to low level (but with a maximum of 100 ms).

If the signal of a sequential transponder is received, the synchronised readers are in the 'pause' phase. The synchronisation signal at the cable extends the pause duration of all readers to 20 ms (fixed value).

#### 9.1.2.2 Full/Half-Duplex System

Full/half-duplex transponders, which receive their power supply through an activation field, begin to transmit the stored identification data immediately. For this a *load modulation procedure* without

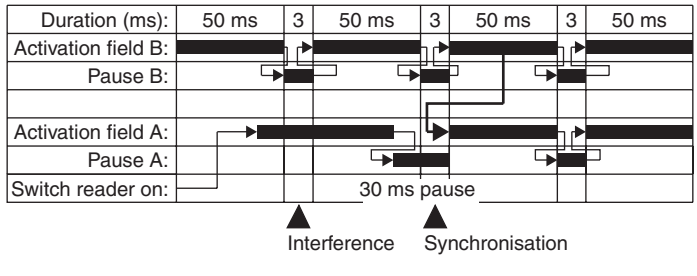


**Figure 9.2** Automatic synchronisation sequence between readers A and B. Reader A inserts an extended pause of a maximum of 30 ms after the first transmission pulse following activation so that it can listen for other readers. In the diagram, the signal of reader B is detected during this pause. The reactivation of the activation field of reader B after the next 3 ms pause triggers the simultaneous start of the pulse pause cycle of reader A

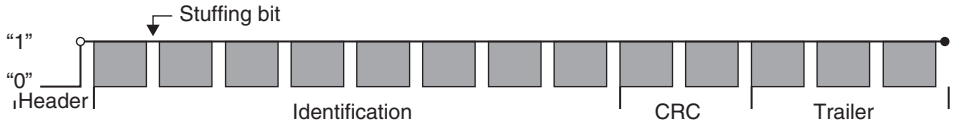


**Figure 9.3** Structure of the load modulation data telegram comprising of starting sequence (header), ID code, checksum and trailer

a subcarrier is used, whereby the data is represented in a differential bi-phase code (DBP). The bit rate is derived by dividing the reader frequency by 32. At 134.2 kHz the transmission speed (bitrate) is 4194 bit/s.

A full/half-duplex data telegram comprises an 11-bit header, 64 bits (8 bytes) of useful data, 16-bit (2-byte) CRC and 24-bit (3-byte) trailer (Figure 9.3). After every eight transmitted bits a stuffing bit with a logic 1 level is inserted to avoid the chance occurrence of the header 00000000001. The transmission of the total of 128 bits takes around 30.5 ms at the given transmission speed.

#### 9.1.2.3 Sequential System

After every 50 ms the activation field is switched off for 3 ms. A sequential transponder that has previously been charged with energy from the activation field begins to transmit the stored identification data approximately 1–2 ms after the activation field has been switched off.

The modulation method used by the transponder is frequency shift keying (2 FSK). The bit coding uses NRZ (comparable to RS232 on a PC). A logic 0 corresponds to the basic frequency 134.2 kHz; a logic 1 corresponds to the frequency 124.2 kHz.

The bitrate is derived by dividing the transmission frequency by 16. The bitrate varies between 8387 bit/s for a logic 0 and 7762 bit/s for a logic 1, depending upon the frequency shift keying.

The sequential data telegram comprises an 8-bit header 01111110b, 64 bits (8 bytes) of useful data, 16-bit (2-byte) CRC and 24-bit (3-byte) trailer. Stuffing bits are not inserted.

The transmission of the total of 112 bits takes a maximum of 14.5 ms at the given transmission speed ('1' sequence).

### *9.1.3 ISO/IEC 14223 – Advanced Transponders*

This standard defines the RF interface and the data structure of so-called *advanced transponders*. ISO/IEC 14223 is based upon the older standards ISO/IEC 11784 and ISO/IEC 11785 and represents a further development of these standards. Whereas transponders in accordance with ISO/IEC 11785 only transmit a permanently programmed identification code, in advanced transponders there is the possibility of managing a larger memory area. As a result, data can be read, written and even protected against overwriting (lock memory block), in blocks.

The standard consists of three parts: Part 1: 'Air Interface', Part 2 'Code and Command Structure' and Part 3 'Applications'. Since this standard is currently still in development we can only consider the content of Parts 1 and 2 here. Part 2 of the standard is based heavily upon the standard ISO/IEC 18000-2, which is still in development.

#### 9.1.3.1 Part 1 – Air Interface

As a further development of ISO/IEC 11785, ISO/IEC 14223 is downwards compatible with its predecessor standard and can thus only be considered in connection with ISO/IEC 11785. This

means both that the identification number of each advanced transponder can be read by a simple ISO/IEC 11785 reader and that an ISO/IEC 11785 transponder is accepted by any advanced reader.

If an advanced transponder enters the interrogation field of an ISO/IEC 14223 compatible reader, then first of all the *ISO/IEC 11784 identification code* will always be read in accordance with the procedure in ISO/IEC 11785. To facilitate differentiation between an advanced transponder and a pure ISO/IEC 11785 transponder, bit 16 (data block follows) of the identification code is set to '1' in advanced transponders. Then, by means of a defined procedure, the transponder is switched into advanced mode, in which commands can also be sent to the transponder.

Advanced transponders can be subdivided into full-duplex (FDX-B) and sequential (HDX-ADV) transponders.

The procedures and parameters defined in ISO/IEC 11785 apply to the data transmission from transponder to reader (up = link) in any operating state.

#### *9.1.3.1.1 FDX-B*

If an advanced transponder of type FDX-B enters the interrogation field of a reader, then the transponder's identification code, as defined in ISO/IEC 11785, is continuously transmitted to the reader. The reader recognises that this is an *FDX-B transponder* by the setting of bit 16 (data block follows). In order to switch the transponder into *advanced mode* the field of the reader must first be completely switched off for 5 ms. If the field is switched back on, the transponder can be switched into advanced mode within a defined time window by the transmission of a 5-bit 'SWITCH' command. The transponder then awaits further commands from the reader.

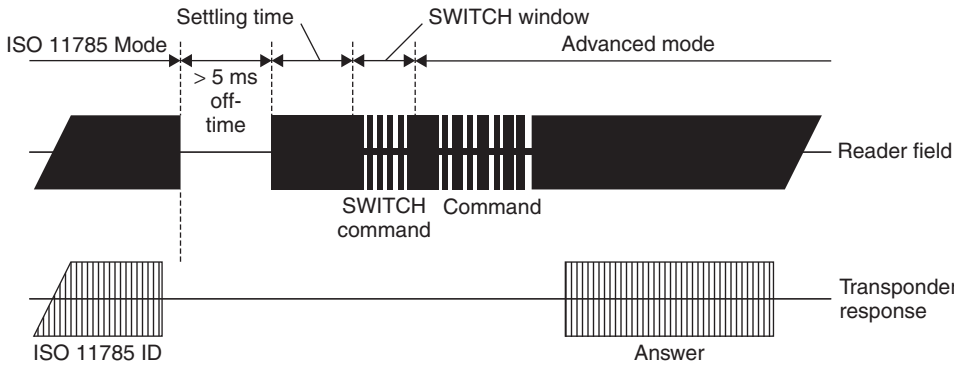


**Figure 9.4** Signal path at the antenna of a reader

**Table 9.2** Parameters of the transmission link from reader to transponder (down-links)

| Parameter | Mode switching | Advanced mode |
|---|---|---|
| Modulation procedure | ASK 90–100% | ASK 90–100% |
| Coding | Binary pulse length | PIE (Pulse interval encoding) |
| Baud rate | 6000 bit/s (LSB first) | 6000 bit/s (LSB first) |
| Mode switching code | 5 bit pattern (00011) | – |
| Mode switching timing | Transponder settling time: $312.5/f_c = 2.33$ ms<br>SWITCH window: $232.5/f_c = 1.73$ ms | |

#### *9.1.3.1.2 HDX-ADV*

A sequential transponder (HDX) charges its charging capacitor during the 50 ms period that the field is switched on. Within the 3 ms field pause the transponder begins to transmit the 64-bit identification code, as defined in ISO/IEC 11785. The duration of the pause is extended to a maximum of 20 ms to facilitate the complete transfer of the data block. An advanced transponder (HDX-ADV) is recognised by the setting of bit 16 (data block follows) in the identification code.

A sequential transponder can be switched to any interrogation cycle in advanced mode. To achieve this, a command is simply sent to the transponder in the second half of the 50 ms period in which the field is switched on (Figure 9.5). The transponder executes this command immediately and sends its response to the reader in the next pause. If no command is sent in an interrogation cycle, then the transponder automatically reverts to ISO/IEC 11785 mode and transmits its identification code to the reader in the next pause.

### 9.1.3.2 Part 2 – Code and Command Structure

This part of the standard describes the simple *transmission protocol* between transponder and reader, the memory organisation of the transponder, and commands that must be supported by advanced transponders.

The structure of a command frame is identical for all types of transponder and is shown in Figure 9.6. The 5-bit command field allows 32 different commands to be defined. Command codes 00–19 are already defined in the standard and are supported in the same way by all advanced transponders. Command codes 20–31, on the other hand, are freely definable by the chip manufacturer and can therefore be occupied by commands with an extremely wide range of functions. The parameters contain (in the case of read and write commands) the block address of a *memory block*,

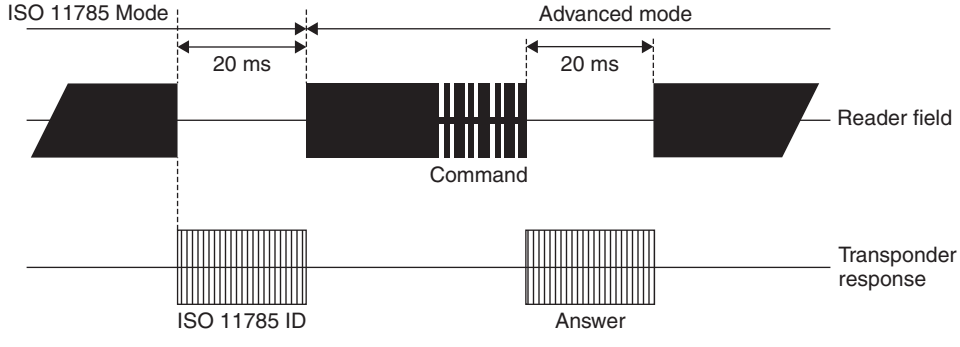


**Figure 9.5** A sequential advanced transponder is switched into advanced mode by the transmission of any desired command

**Table 9.3** Parameters of the transmission link from reader to transponder (down-link)

| Parameter | Value |
|---|---|
| Modulation procedure | ASK 90–10% |
| Coding | Pulse width modulation (PWM) |
| Baud rate (down-link) | 500 bit/s |

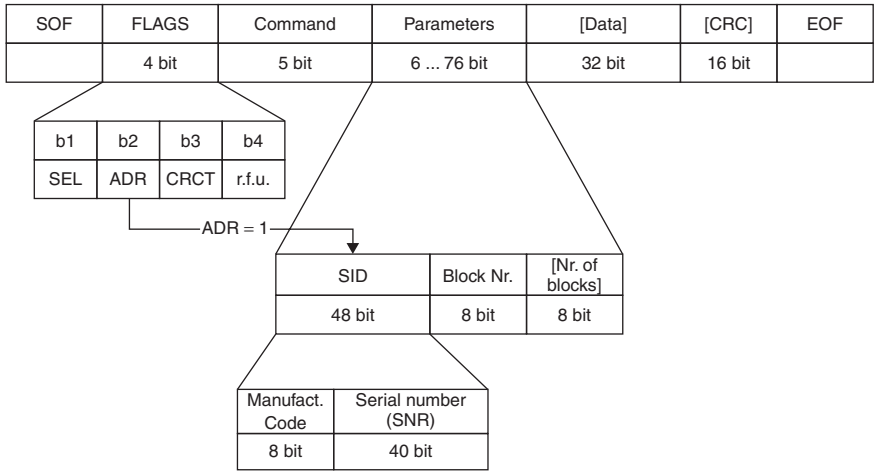


**Figure 9.6** Structure of an ISO/IEC 14223 command frame for the transmission of data from reader to transponder

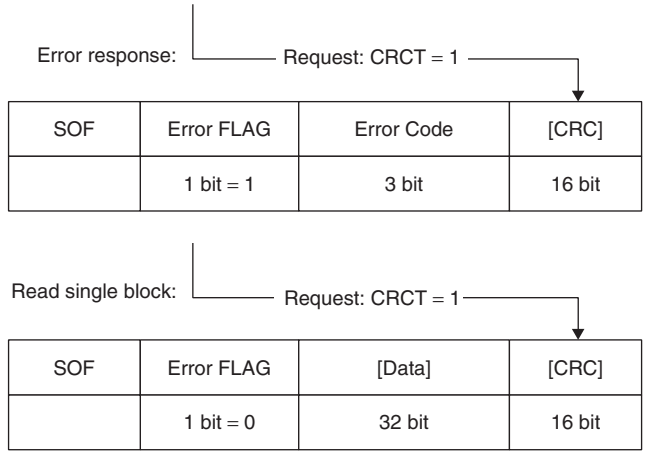


**Figure 9.7** Structure of an ISO/IEC 14223 response frame for the transmission of data from transponder to the reader

optionally the number of memory blocks to be processed by this command, and, again optionally, (ADR = 1) the previously determined UID in order to explicitly address a certain transponder. The four flags in the command frame facilitate the control of some additional options, such as an optional *CRC* at the end of the response frame (CRCT = 1), the explicit transponder addressing (ADR = 1) mentioned above, and access to the transponder in a special 'selected' status (SEL = 1).

The structure of the response frame is shown in Figure 9.7. This contains a flag that signals the error status of the transponder to the reader (error flag). The subsequent 3-bit status field contains a more precise interpretation of the error that has occurred.

The command set and the protocol structure of an advanced transponder correspond with the values defined in ISO/IEC 18000-2.

## 9.2 Contactless Smart Cards

There are currently three different standards for contactless smart cards based upon a broad classification of the range (Table 9.4).[1]

Most of the standard for close-coupling smart cards – ISO 10536 – had already been developed by between 1992 and 1995. Due to the high manufacturing costs of this type of card[2] and the small

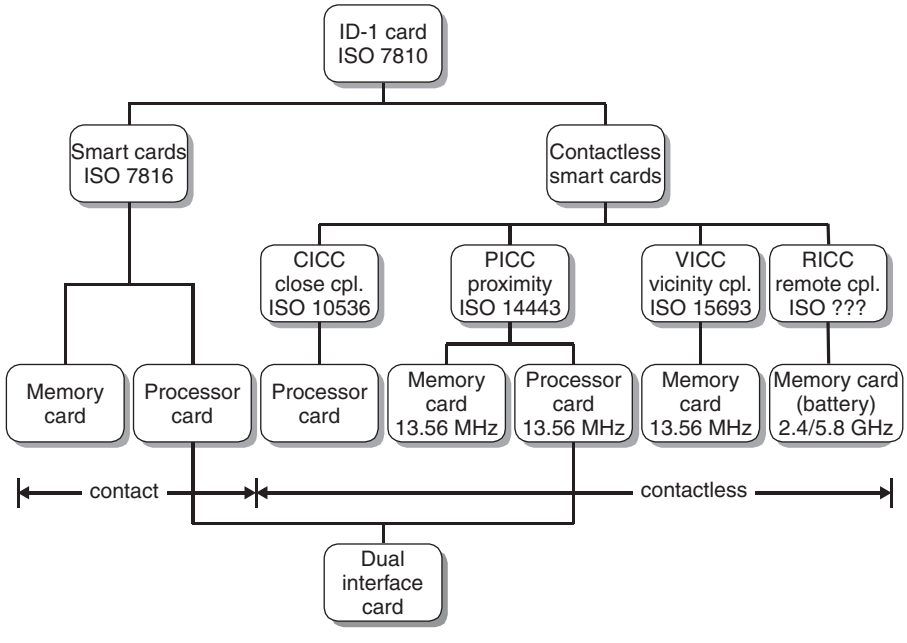


**Figure 9.8** Family of (contactless and contact) smart cards, with the applicable standards

**Table 9.4** Available standards for contactless smart cards

| Standard | Card type | Approximate range |
|---|---|---|
| ISO/IEC 10536 | Close-coupling | 0–1 cm |
| ISO/IEC 14443 | Proximity-coupling | 0–10 cm |
| ISO/IEC 15693 | Vicinity-coupling | 0–1 m |

[1] The standards themselves contain no explicit information about a maximum range; rather, they provide guide values for the simple classification of the different card systems.

[2] The cards consist of a complex structure consisting of up to four inductive coupling elements and the same number of capacitive coupling elements.

advantages in comparison to contact smart cards,[3] close-coupling systems were never successful on the market and today they are hardly ever used.

## 9.2.1 ISO/IEC 10536 – Close-Coupling Smart Cards

The ISO/IEC standard 10536 entitled 'Identification cards – contactless integrated circuit(s) cards' describes the structure and operating parameters of contactless close-coupling smart cards. *ISO/IEC 10536* consists of the following four sections:

- Part 1: Physical characteristics
- Part 2: Dimensions and location of coupling areas
- Part 3: Electronic signals and reset procedures
- Part 4: Answer to reset and transmission protocols (still under preparation)

### 9.2.1.1 Part 1 – Physical Characteristics

The physical characteristics of close-coupling cards are defined in Part 1 of the standard. The specifications regarding mechanical dimensions are identical to those for contact smart cards.

### 9.2.1.2 Part 2 – Dimensions and Locations of Coupling Areas

Part 2 of the standard specifies the position and dimensions of the coupling elements. Both *inductive* (H1–H4) and *capacitive coupling elements* (E1–E4) are used. The arrangement of the coupling elements is selected so that a close-coupling card can be operated in an insertion reader in all four positions (Figure 9.9).

### 9.2.1.3 Part 3 – Electronic Signals and Reset Procedures

#### *9.2.1.3.1 Power Supply*

The power supply for close-coupling cards is derived from the four inductive coupling elements H1–H4. The inductive alternating field should have a frequency of 4.9152 MHz. The coupling

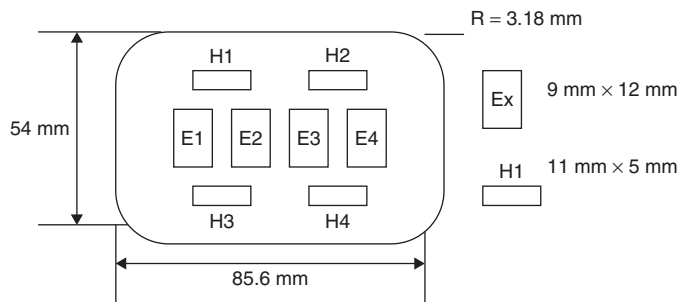


**Figure 9.9** Position of capacitive (E1–E4) and inductive coupling elements (H1–H4) in a close-coupling smart card

[3] Close-coupling smart cards also need to be inserted into a reader for operation, or at least precisely positioned on a stand.

elements H1 and H2 are designed as coils, but have opposing directions of winding, so that if power is supplied to the coupling elements at the same time there must be a phase difference of 180° between the associated magnetic fields F1 and F2 (e.g. through a U-shaped core in the reader). The same applies for the coupling elements H3 and H4.

The readers must be designed such that power of 150 mW can be provided to the contactless card from any of the magnetic fields F1–F4. However, the card may not draw more than 200 mW via all four fields together.

#### *9.2.1.3.2 Data Transmission Card → Reader*

Either inductive or capacitive coupling elements may be used for data transmission between card and reader. However, it is not possible to switch between the two types of coupling during communication.

**Inductive.** *Load modulation* with a *subcarrier* is used for the transmission of data via the coupling fields H1–H4. The *subcarrier frequency* is 307.2 kHz and the subcarrier is modulated using 180° *PSK*. The reader is designed such that a load change of 10% of the base load at one or more of the fields F1–F4 can be recognised as a load modulation signal. The specified minimum load change for a card is 1 mW.

**Capacitive.** In this procedure the coupling fields E1, E2 or E3, E4 are used as pairs. In both cases the paired coupling fields are controlled by a differential signal. The voltage difference $U_{\text{diff}} = U_{\text{E1}} - U_{\text{E2}}$ should be measured such that a voltage level of at least 0.33 V is present at the reader coupling surfaces E1′ and E2′. Data transmission takes place using *NRZ coding* in the baseband (i.e. no subcarrier). The data rate after reset is 9600 bit/s; however, a higher data rate can be used during operation.

#### *9.2.1.3.3 Data Transmission Reader → Card*

The standard gives preference to the inductive method for data transmission to the card. The modulation procedure is a 90° PSK of the fields F1–F4 and the phase position of all fields is modulated synchronously. Depending upon the position of the card in the insertion reader, the phase relationships shown in Tables 9.5 and 9.6 are possible between the coupling fields during modulation.

Data transmission takes place using *NRZ coding* in the baseband (i.e. no subcarrier). The data rate after reset is 9600 bit/s; however, a higher data rate can be used during operation.

**Table 9.5** Position 1 (state A, unmodulated; state A′, modulated)

| A | A′ |
|---|---|
| $\Phi F$ | $1\Phi' F1 = \Phi F1 - 90°$ |
| $\Phi F3 = \Phi F1 + 90°$ | $\Phi' F3 = \Phi F3 + 90°$ |

**Table 9.6** Position 2 (state A, unmodulated; state A′, modulated)

| A | A′ |
|---|---|
| F1 | $\Phi' F1 = \Phi' F1 + 90°$ |
| $\Phi F3 = \Phi F1 - 90°$ | $\Phi' F3 = \Phi' F3 - 90°$ |

#### 9.2.1.4 Part 4 – Answer to Reset and Transmission Protocols

This part of ISO 10536 describes the transmission protocol between reader and card. We will not describe Part 4 here because it is still under development by the standardisation committee in question, and may therefore be subject to change.

## *9.2.2 ISO/IEC 14443 – Proximity-Coupling Smart Cards*

ISO/IEC standard 14443 entitled 'Identification cards – Proximity integrated circuit(s) cards' describes the operating method and operating parameters of contactless proximity-coupling smart cards. This means contactless smart cards with an approximate range of 7–15 cm, like those used predominantly in the field of ticketing. The data carrier of these smart cards is normally a microprocessor and they often have additional contacts (see also Section 10.2.1).

The standard comprises the following parts:

- Part 1: Physical characteristics.
- Part 2: Radio frequency power and signal interface.
- Part 3: Initialisation and anticollision (still in preparation).
- Part 4: Transmission protocols (in preparation).

#### 9.2.2.1 Part 1 – Physical Characteristics

Part 1 of the standard defines the mechanical properties of the smart cards. The dimensions correspond with the values specified in ISO/IEC 7810, i.e. $85.72 \times 54.03 \times 0.76\,\text{mm} \pm$ tolerances.

Furthermore, this part of the standard also includes notes on the testing of the dynamic bending stress and dynamic torsion stress, plus irradiation with UV, X-ray and electromagnetic radiation.

#### 9.2.2.2 Part 2 – Radio Frequency Interference

The power supply of inductively coupled *proximity cards* (*PICC*) is provided by the magnetic alternating field of a reader (PCD) at a transmission frequency of 13.56 MHz. To this end the card incorporates a large area antenna coil typically with 3–6 windings of wire (see Figures 2.11 and 2.12).

The magnetic field generated by the reader must be within the range $1.5\,\text{A/m} \leq H \leq 7.5\,\text{A/m}$. Thus the *interrogation field strength* $H_{\min}$ of a proximity-coupling smart card is automatically $H_{\min} \leq 1.5\,\text{A/m}$. This is the only way to ensure that a smart card with an interrogation field strength $H_{\min} = 1.5\,\text{A/m}$ can be read by a reader that generates a field strength of just 1.5 A/m (e.g. a portable, battery-operated reader with a correspondingly lower transmission power), at least at distance $x = 0$ from the transmission antenna (smart card in contact) (Berger, 1998).

If the field strength curve of a reader and the interrogation field strength of a proximity-coupling smart card are known, then the range of the system can be calculated. The field strength curve of a typical reader in accordance with ISO/IEC 14443 is shown in Figure 9.11 (see Section 4.1.1.1). In this case, a smart card interrogation field strength of 1.5 A/m results in a range of 10 cm.

Unfortunately it was not possible to agree to a common communication interface in the development of this standard. For this reason, two completely different procedures for the data transfer between reader and proximity-coupling smart card have found a place in ISO/IEC 14443 – Type A and Type B. A smart card only has to support one of the two communication procedures. A reader conforming to the standard, on the other hand, must be able to communicate equally well by both procedures, and thus support all smart cards. This means that the reader must switch between the two communication procedures (polling) periodically during 'idle' mode ('wait for smart card').

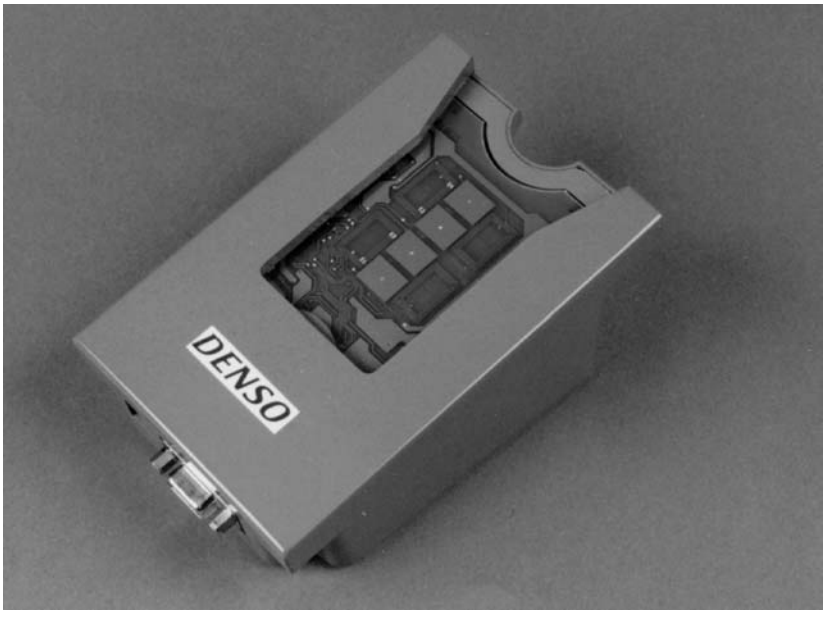


**Figure 9.10** Half-opened reader for close-coupling smart cards in accordance with ISO 10536. In the centre of the insertion slot four capacitive coupling areas can be seen, surrounded by four inductive coupling elements (coils) (reproduced by permission of Denso Corporation, Japan – Aichi-ken)

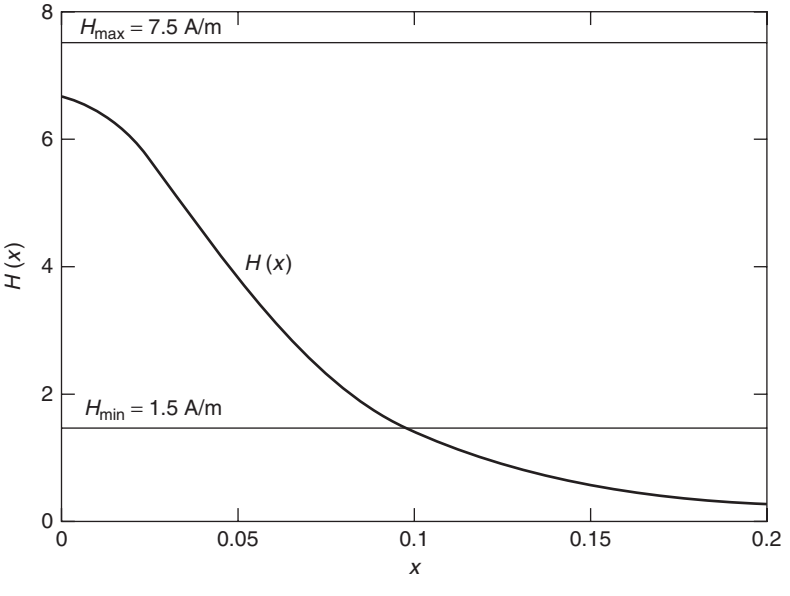


**Figure 9.11** Typical field strength curve of a reader for proximity-coupling smart cards (antenna current $i_1 = 1$A, antenna diameter $D = 15$ cm, number of windings $N = 1$)

However, the reader may not switch between the two procedures during an existing communication relationship between reader and card.

#### *9.2.2.2.1 Communication Interface – Type A*

In type A cards 100% *ASK modulation* with modified *Miller coding* (Figure 9.12) is defined as the modulation procedure used for the transfer of data from reader to card. In order to guarantee a continuous power supply to the card the length of the blanking intervals is just 2–3 µs. The requirements of the transient response and transient characteristics of the RF signal generated by the reader in the blanking intervals are described in detail in the standard. A load modulation procedure with subcarrier is used for data transfer from the smart card to the reader. The *subcarrier frequency* $f_H = 847\,\text{kHz}$ (13.56 MHz/16). The modulation of the subcarrier is performed by on/off keying of the subcarrier using a Manchester coded data stream.

In both transfer directions the baud rate $f_{Bd} = 106\,\text{kBit/s}$ (13.56 MHz/128).

#### *9.2.2.2.2 Communication Interface – Type B*

In Type B cards 10% *ASK modulation* (Figure 9.14) is used as the modulation procedure for the data transfer from reader to card. A simple *NRZ coding* is used for bit coding. The transient response and transient characteristics of the RF signal in the 0/1 transitions are precisely defined in the standard and requirements of the quality of the transmission antenna can be derived from this (see Section 11.4.3).

For data transfer from the smart card to the reader load modulation with a subcarrier is also used for the Type B card. The subcarrier frequency $f_H = 847\,\text{kHz}$ (13.56 MHz/16). The subcarrier is modulated by 180° phase shift keying (BPSK) of the subcarrier using the NRZ coded data stream.

In both transmission directions the baud rate $f_{Bd} = 106\,\text{kBit/s}$ (13.56 MHz/128).

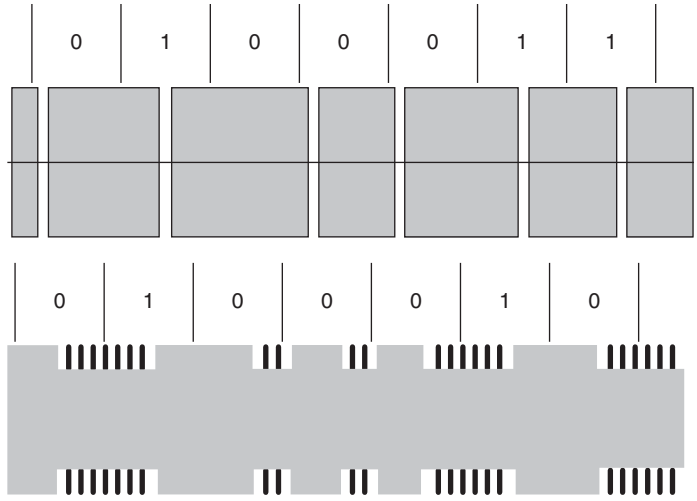


**Figure 9.12** Modulation procedure for proximity-coupling smart cards in accordance with ISO/IEC 14443 – Type A: Top: down-link – ASK 100% with modified Miller coding (voltage path at the reader antenna). Bottom: up-link – load modulation with ASK modulated 847 kHz subcarrier in Manchester coding (voltage path at the transponder coil)

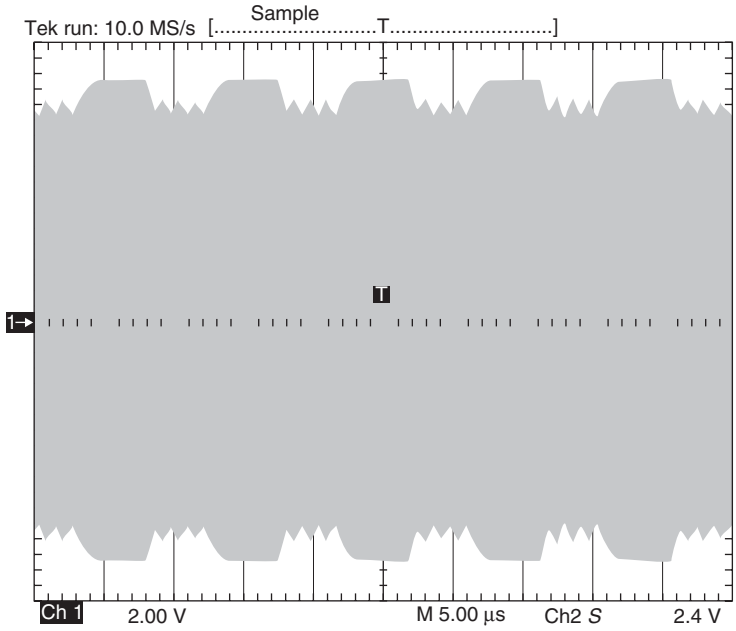


**Figure 9.13** The oscillogram of a signal generated at the reader antenna by a Type A card using load modulation with an ASK modulated subcarrier

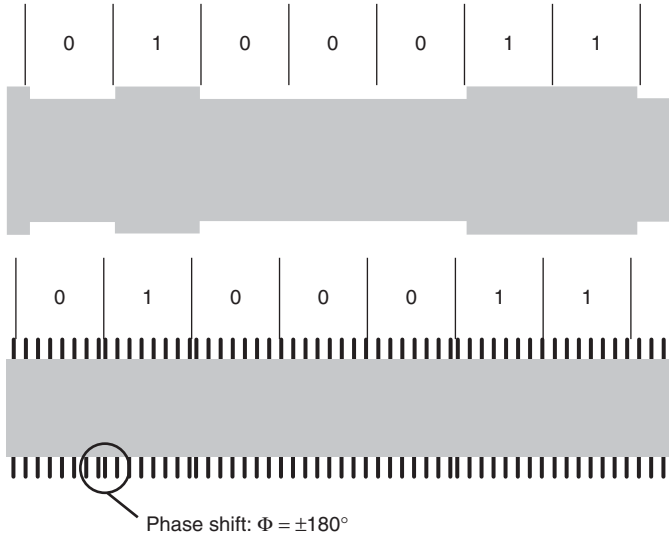


**Figure 9.14** Modulation procedure for proximity-coupling smart cards in accordance with ISO/IEC 14443 – Type B. Top: down-link – ASK 10% with NRZ coding (voltage path at the reader antenna). Bottom: up-link – load modulation with BPSK modulated 847 kHz subcarrier in NRZ coding (voltage path at the transponder coil)

**Table 9.7** Data transfer reader (PCD) → smart card (PICC) (Berger, 1998)

| PCD → PICC | Type A | Type B |
|---|---|---|
| Modulation | ASK 100% | ASK 10% (modulation index 8–12%) |
| Bit coding | Modified Miller code | NRZ code |
| Synchronisation | At bit level (start-of-frame, end-of-frame marks) | 1 start and 1 stop bit per bye (specification in Part 3) |
| Baud rate | 106 kBd | 106 kBd |

**Table 9.8** Data transfer smart card (PICC) → reader (PCD) (Berger, 1998)

| PICC → PCD | Type A | Type B |
|---|---|---|
| Modulation | Load modulation with subcarrier 847 kHz, ASK modulated | Load modulation with subcarrier 847 kHz, BPSK modulated |
| Bit coding | Manchester code | NRZ code |
| Synchronisation | 1 bit frame synchronisation (start-of-frame, end-of-frame marks) | 1 start and 1 stop bit per byte (specification in Part 3) |
| Baud rate | 106 kBd | 106 kBd |

#### *9.2.2.2.3 Overview*

To sum up, the parameters shown in Tables 9.7 and 9.8 exist for the physical interface between reader and smart card of an RFID system in accordance with ISO/IEC 14443-2.

### 9.2.2.3 Part 3 – Initialisation and Anticollision

If a proximity-coupling smart card enters the interrogation field of a reader, then a communication relationship must first of all be built up between reader and smart card, taking into consideration the fact that there may be more than one smart card within the interrogation zone of this reader and that the reader may already be in communication with another card. This part of the standard therefore first describes the structure of the protocol frames from the basic elements defined in Part 2 – data bit, start-of-frame and end-of-frame marks – and the anticollision procedure used for the selection of an individual card. Since the different modulation procedure for Type A and Type B also requires a different frame structure and anticollision procedure, the divide between the two types A and B is reflected in Part 3 of the standard.

#### *9.2.2.3.1 Type A Card*

As soon as a Type A smart card enters the interrogation zone of a reader and sufficient supply voltage is available, the card's microprocessor begins to operate. After the performance of some initialisation routines – if the card is a dual interface card these include checking whether the card is in contactless or contact mode – the card is put into so-called *IDLE mode*. At this point the reader can exchange data with another smart card in the interrogation zone. However, smart cards in the IDLE state may never react to the reader's data transmission to another smart card ('any command') so that an existing communication is not interrupted.

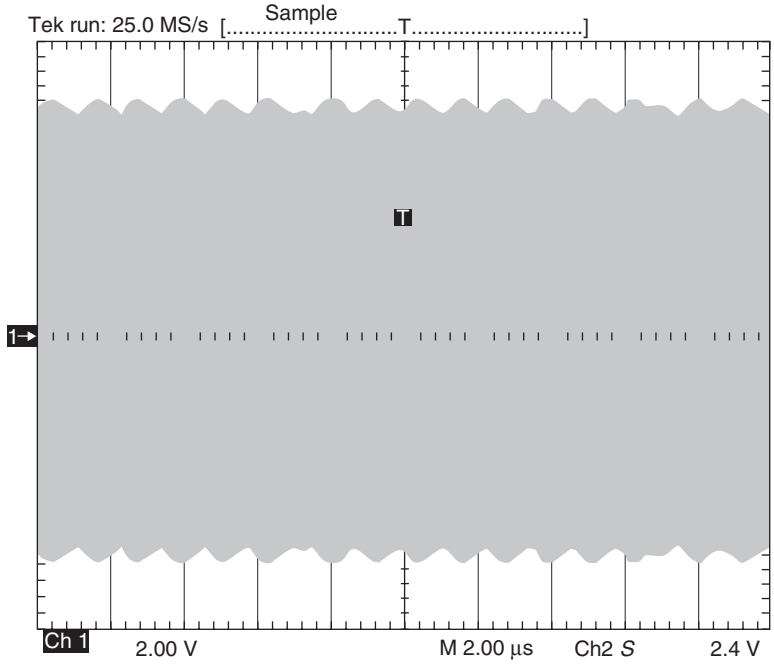


**Figure 9.15** The oscillogram of a signal generated at the reader antenna by a Type B card using load modulation with BPSK modulated subcarrier

If, when the card is in IDLE mode, it receives a valid REQA command (Request-A), then an ATQA block (answer to request) is sent back to the reader in response (Figure 9.16). In order to ensure that data destined for another card in the interrogation field of the reader is not falsely interpreted as a REQA command, this command is made up of only 7 data bits (Figure 9.17). The ATQA block sent back, on the other hand, consists of 2 bytes and is returned in a standard frame.

After the card has responded to the REQA command it is put into the READY state. The reader has now recognised that at least one card is in the interrogation field and begins the anticollision algorithm by transmitting a SELECT command. The anticollision procedure used here is a dynamic *binary search tree algorithm*.[4] A bit-oriented frame is used for the transfer of the search criterion and the card's response, so that the transmission direction between reader and card can be reversed after a desired number of bits have been sent. The NVB (number of valid bits) parameter of the SELECT command specifies the current length of the search criterion.

The length of a single serial number is 4 bytes. If a serial number is detected by the anticollision algorithm, then the reader finally sends the full serial number (NVB = 40 h) in the SELECT command, in order to select the card in question. The card with the detected serial number confirms this command by an SAK (SELECT-Acknowledge) and is thereby put into ACTIVE state, the selected state. A peculiarity, however, is that not all cards possess a 4-byte serial number (single size). The standard also permits serial numbers of 7 bytes (double size) and even 10 bytes (triple

[4] Knowledge of this procedure is a prerequisite at this point. A step-by-step introduction into the method of functioning can be found in Section 7.2.4.3.

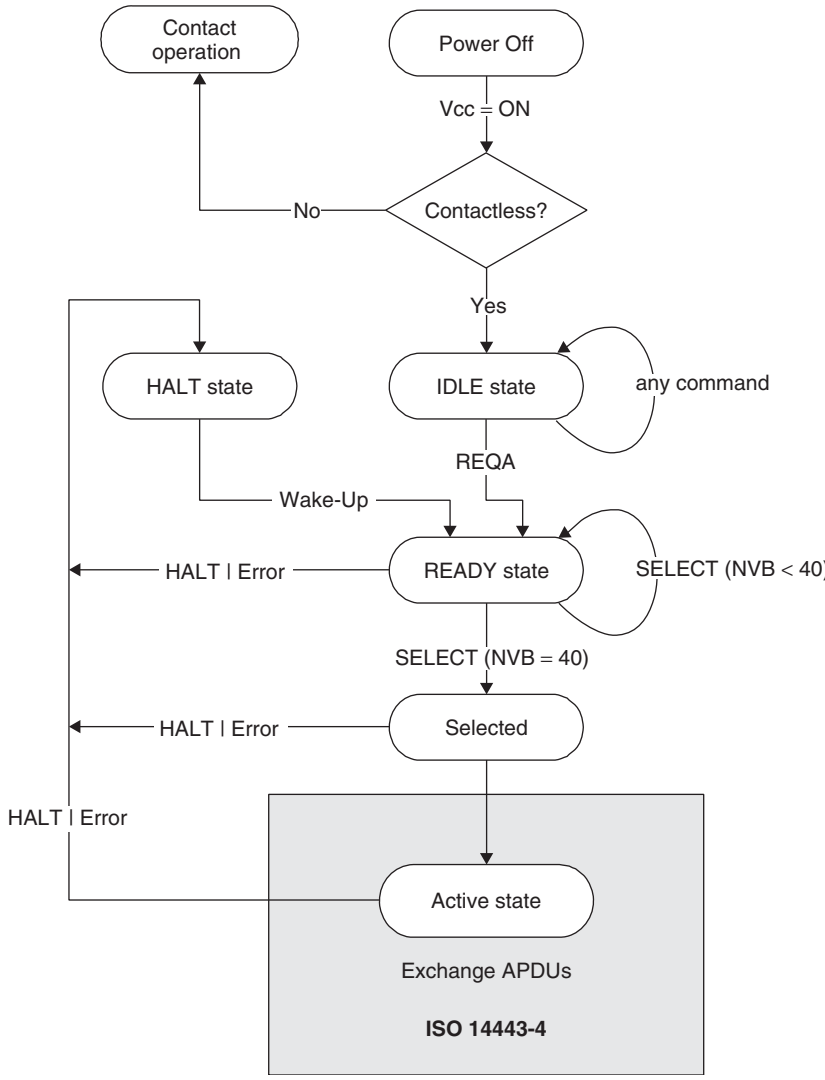


**Figure 9.16** State diagram of a Type A smart card in accordance with ISO/IEC 14443 (Berger, 1998)

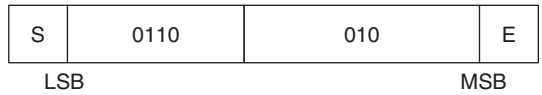


**Figure 9.17** The reader's *Request command* for Type A cards (REQA) is made up of only 7 data bits. This reliably rules out the misinterpretation of useful data destined for another card as a REQUEST command (S = start-of-frame, E = end-of-frame)

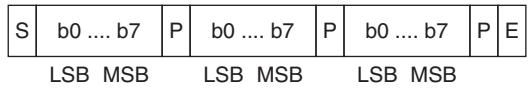


**Figure 9.18** With the exception of the REQA command and data transmitted during the anticollision routine, all data sent between reader and card (i.e. command, response and useful data) is transferred in the form of standard frames. This always begins with a start-of-frame signal (S), followed by any desired number of data bytes. Each individual data byte is protected against transmission errors by a parity bit. The data transmission is concluded by an end-of-frame signal (E)

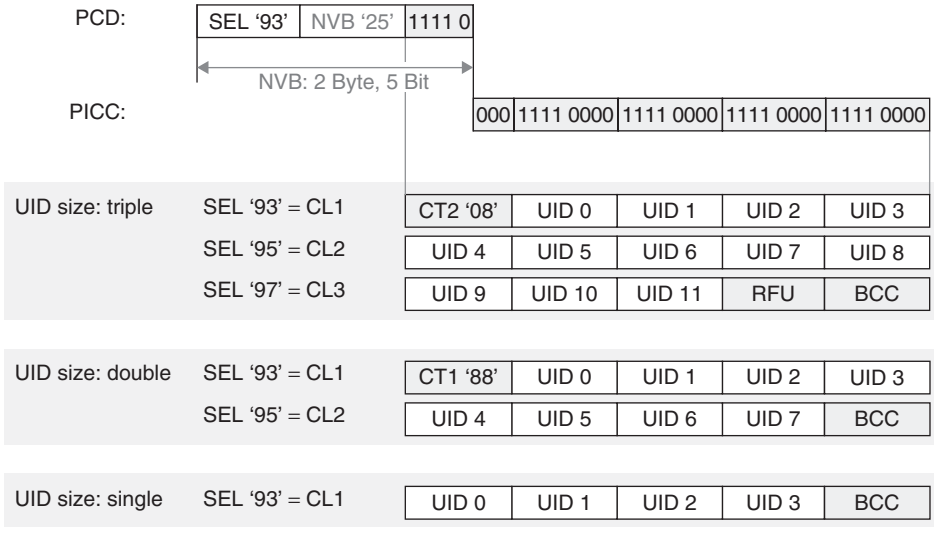


**Figure 9.19** A dynamic binary search tree algorithm is used for the determination of the serial number of a card. The serial numbers can be 4, 7 or 10 bytes long, so the algorithm has to be run several times at different cascade levels (CL)

size). If the selected card has a double or triple size serial number, this will be signalled to the reader in the card's SAK, by a set cascade bit (b3 = 1), with the card remaining in the READY state. This results in the anticollision algorithm being restarted in the reader so that it can detect the second part of the serial number. In a triple size serial number the anticollision algorithm must even be run a third time. To signal to the card which part of the serial number is to be detected by the algorithm that has been initiated, the SELECT command differentiates between three cascade levels (CL1, CL2, CL3) (Figure 9.19). However, the process of detecting a serial number always begins with cascade level 1. In order to rule out the possibility of fragments of a longer serial number corresponding by coincidence with a shorter serial number, so-called cascade tags (CT = 88 h) are inserted at a predetermined position in the double or triple size numbers. This value may therefore never occur at the corresponding byte positions in the shorter serial numbers.

Precise timing between a reader's command and the smart card's response should also be ensured. The standard prescribes a synchronous behaviour of the smart card, which means that the response may only be transmitted at defined moments in a fixed time grid (Table 9.9).

**Table 9.9** Required time grid for the transponder response during anticollision

| Last received byte: | Required time response: |
|---|---|
| '1' | $t_{\text{RESPONSE}} = (\text{N} \cdot 128 + 84) \cdot t_0$ |
| '0' | $t_{\text{RESPONSE}} = (\text{N} \cdot 128 + 20) \cdot t_0$ |

For the response to a REQA, WakeUp or SELECT command $N = 9$. For all other commands (e.g. application commands) $N$ must be greater than or equal to 9 ($N = 9, 10, 11, 12, \ldots$).

#### *9.2.2.3.2 Type B Cards*

If a Type B smart card is brought within the interrogation field of a reader, the smart card, after the performance of a few initialisation routines, is initially put into IDLE mode and waits to receive a valid REQB (REQUEST-B) command (Figure 9.20).

The transmission of a REQB command immediately initiates the anticollision algorithm in Type B cards. The procedure used here is a dynamic *slotted ALOHA procedure*,[5] in which the number of slots can be dynamically changed by the reader. The number of slots currently available is encoded in a parameter of the REQB command. In order to facilitate a preselection during the selection of a card, the REQB command has a further parameter, the application family identifier (AFI), which allows a certain application group to be entered as a search criterion (Table 9.10).

After a card has received a valid *REQB command* it checks whether the application group preselected in the parameter AFI is present in the applications stored on the card. If so, the parameter $M$ of the REQB command is evaluated to detect the number of slots available for anticollision (Table 9.11). If the number of available slots is greater than one, a random-check generator in the card is used to determine the number of the slot in which the card wishes to transmit its response to the reader. In order to guarantee the synchronisation of the cards with the slots, the reader transmits its own slot marker at the beginning of each slot. The card waits until the slot marker of the previously determined slot is received (Ready Requested State) and responds to the REQB command by sending an ATQB (Answer To Request B).

A short time after the transmission of a slot marker (Figure 9.23) the reader can determine whether a smart card has begun to transmit an ATQB within the current slot. If not, the current slot can simply be interrupted by the transmission of the next slot marker in order to save time.

The request response ATQB sent by the smart card provides the reader with a range of information about important parameters of the smart card (see Figure 9.22). In order to be able to select the card, the ATQB first of all contains a 4-byte serial number. In contrast to Type A cards, the serial number of a Type B card is not necessarily permanently linked to the microchip, but may even consist of a random number, which is newly determined after every power-on reset (PUPI, pseudo unique

| Apf | AFI | PARAM | CRC |
|---|---|---|---|
| 1 Byte | 1 Byte | 1 Byte | 2 Bytes |

**Figure 9.20** Structure of an REQB command. In order to reliably rule out errors the anticollision prefix (Apf) possess a reserved value (05h), which may not be used in the NAD parameter of a different command

[5] Knowledge of this procedure is a prerequisite at this point. A step-by-step introduction into the method of functioning can be found in Section 7.2.4.2.

**Table 9.10** The application family identifier (AFI) facilitates the preselection from a group of applications in the REQB command

| AFI bit 7–bit 4 application group | AFI bit 3–bit 0 subgroup | Comment |
|---|---|---|
| 0000 | 0000 | All application groups and subgroups |
| – | 0000 | All subgroups of an application group |
| 'X' | 'Y' | Only subgroup Y of application group X |
| 0001 | – | Transport (local transport, airlines, ...) |
| 0010 | – | Payments (banks, tickets, ...) |
| 0011 | – | Identification (passport, driving licence) |
| 0100 | – | Telecommunication (telephone card, GSM, ...) |
| 0101 | – | Medicine (health insurance card, ...) |
| 0110 | – | Multimedia (internet service, pay-TV) |
| 0111 | – | Games (casino card, lotto card) |
| 1000 | – | Data storage ('portable files', ...) |
| 1001–1111 | – | Reserved for future applications |

**Table 9.11** The number of available slots can be set by the parameter *M* in the REQB command

| Para *M* byte (bit 2–bit 0) | Number of slots *N* |
|---|---|
| 000 | 1 |
| 001 | 2 |
| 010 | 4 |
| 011 | 8 |
| 100 | 16 |
| 101 | Reserved for future applications |
| 11x | Reserved for future applications |

PICC identifier). Parameters of the contactless interface are encoded within the 'Protocol Info' parameter, for example the maximum possible baud rate of the smart card, the maximum frame size,[6] or information on alternative protocols. The 'Application Data' parameter can, moreover, include information on several applications available on the card (multi-application card).

As soon as the reader has received the ATQB of at least one smart card without errors the card can be selected. This takes place by means of the first application command transmitted by the reader. The structure of this command corresponds with that of a standard frame (Figure 9.24), but it is extended by additional information in a special prefix, the ATTRIB prefix (Figure 9.25).

The ATTRIB prefix itself is made up of the (previously determined) serial number (PUPI) of the card to be selected and a parameter byte. The parameter byte contains important information on the possible communication parameters of the reader, such as the smart card's minimum waiting time between a reader's command and the smart card's response, or the necessary waiting time between the switching on of the subcarrier system in the load modulator and the first data bit sent by the card.

[6] The maximum frame size that a card can process is determined by the size of the available reception buffer in the RAM memory of the microprocessor. Particularly in low-cost applications, the size of the RAM memory can be very skimpily dimensioned.

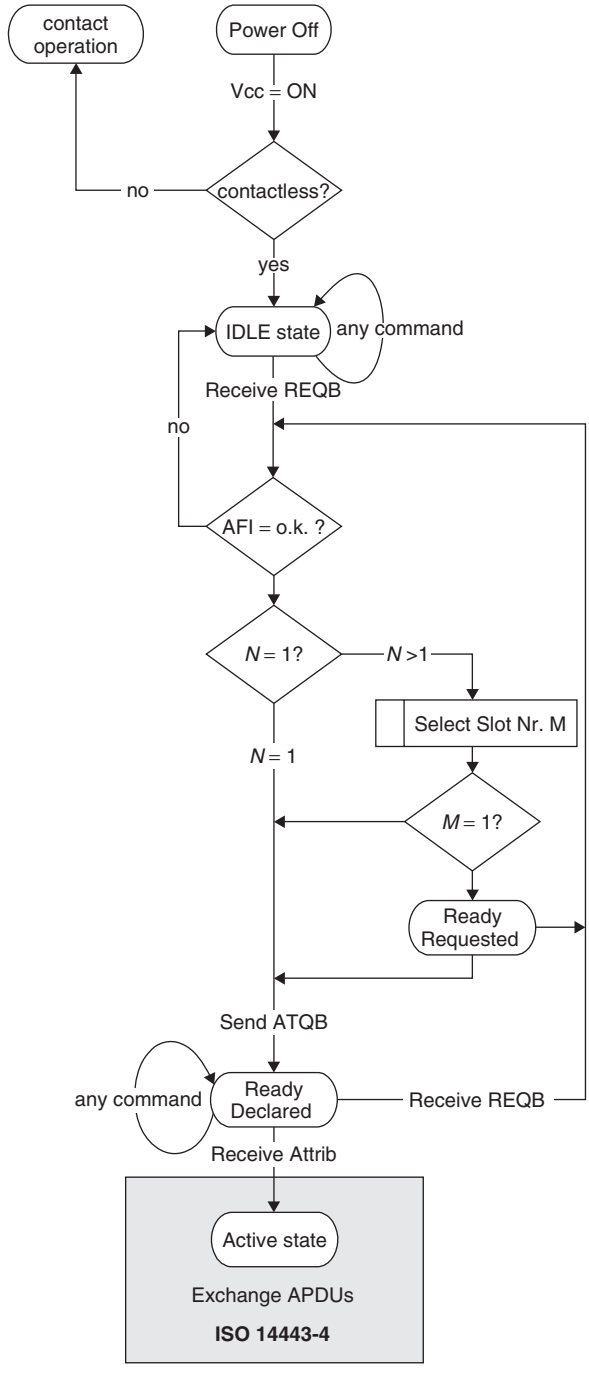


**Figure 9.21** State diagram of a Type B smart card in accordance with ISO/IEC 14443

| Apa | PUPI (Identifier) | Application Data | Prot. Info | CRC |
|---|---|---|---|---|
| 1 Byte | 4 Bytes | 4 Bytes | 2 Bytes | 2 Bytes |

**Figure 9.22** Structure of an ATQB (Answer To Request B)

| APn | CRC |
|---|---|
| 1 Byte | 2 Bytes |

**Figure 9.23** Structure of a slot marker. The sequential number of the following slot is coded in the parameter APn: APn = 'nnnn 0101b' = 'n5h'; n = slot marker 1–15

| NAD | Data | CRC |
|---|---|---|
| 1 Byte | *N* Bytes | 2 Bytes |

**Figure 9.24** Structure of a standard frame for the transmission of application data in both directions between the reader and a Type B card. The value x5h (05 h, 15h, 25h, ... E5h, F5h) of the NAD (node address) are subject to anticollision commands, in order to reliably rule out confusion with application commands

| ATTRIB-Prefix | | | Suffix: 1st applicative command | | |
|---|---|---|---|---|---|
| Apc | PUPI (Identifier) | Param | NAD | Application Data | CRC |
| 1 Byte | 4 Bytes | 1 Byte | 1 Byte | *N* Bytes | 2 Bytes |

**Figure 9.25** A card is selected by the sending of an application command preceded by the ATTRIB prefix, if the identifier of the card corresponds with the identifier (PUPI) of the prefix

#### 9.2.2.4 Part 4 – Transmission Protocols

After a communication relationship has been established between a reader and a proximity-coupling smart card, commands for reading, writing and the processing of data can be sent to the card. This part of the standard describes the structure of the data protocol that this necessitates and the processing of transmission errors, so that data can be transferred between the communication participants without errors.

In the Type A card, additional information for the configuration of the protocol to different card and reader properties (e.g. possible baud rates, maximum size of the data blocks, etc.) must be transferred. In Type B cards this information has already been transferred during the anticollision process (ATQB, ATTRIB), so in the case of this card type, the protocol can be commenced immediately.

#### *9.2.2.4.1 Protocol Activation in Type A Cards*

The selection of a Type A card in the anticollision loop is confirmed by the card by the transmission of a *SAK* (select acknowledge). The *SAK* contains information about whether a protocol in accordance with ISO/IEC 14443-4 has been implemented in this card, or whether the card has a proprietary protocol (e.g. MIFARE).

If a protocol in accordance with ISO/IEC 14443-4 is available in the card, the reader demands the card's *ATS* (answer to select) by transmitting a RATS command (request for answer to select, Figure 9.26). The *RATS* command contains two parameters that are important for the subsequent communication: FSDI and CID.

*FSDI* (frame size device integer) defines the maximum number of bytes that may be sent from the card to the reader in one block. Possible values for this are 16, 24, 32, . . . 128 and 256 bytes.

Furthermore, the smart card is allocated a CID (card identifier). Using the CID, it is possible for a reader to maintain several Type A cards in a selected state at the same time and to address an individual card selectively via its CID.

The ATS (answer to select) sent by the card in response to the RATS command corresponds to the function of the ATR (answer to reset) of a contact smart card and describes important protocol parameters of the smart card's operating system, so that the data transmission between card and reader can be optimised in relation to the properties of the implemented application.

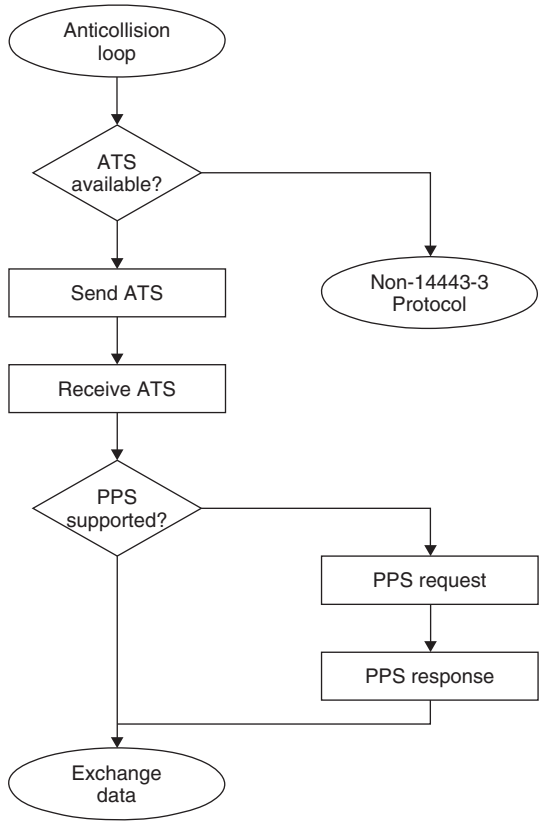


**Figure 9.26** After anticollision the ATS of the card is requested

**Table 9.12** The ATS describes important protocol parameters of the Type A card

| Parameters | Comment |
|---|---|
| FSCI | Frame size card integer: maximum number of bytes that may be sent in a block from the reader to the card |
| DS | Data rate send: supported data rates of the smart card during the data transfer from the card to the reader (possible values: 106, 204, 408, 816 Kbit/s) |
| DR | Data rate send: supported data rates of the smart card during the data transmission from the reader to the card (possible values: 106, 204, 408, 816 Kbit/s) |
| FWI | Frame waiting integer: this parameter defines the 'frame waiting time', i.e. the maximum time that a reader has to wait after transmitting a command for the response of the smart card. If no answer has been received from the card after the end of this time, then a 'time-out' error occurs in the communication |
| SFGI | Start-up frame guard integer: this parameter defines the 'start-up frame waiting time', a special 'frame waiting time', that is valid exclusively for the performance of the first application command after the ATS |
| CID supported NAD supported | These parameters indicate whether the parameters CID (card identifier) and NAD (node address) are supported by the smart card's operating system |
| Historical bytes | The historical bytes contain additional, freely definable information on the operating system of the smart card, e.g. a version number |

Individually, the (optional) parameters listed in Table 9.12 can be contained in the ATS.

Immediately after receiving the ATS, the reader can still initiate the changeover of the transmission baud rates by sending out a special PPS command (protocol parameter selection). Based upon an initial baud rate of 106 Kbit/s, the baud rates in both transmission directions can be increased independently of one another by a factor of 2, 4 or 8 if the smart card has signalled the support of higher baud rates in the optional parameters DS and DR in the ATS.

#### *9.2.2.4.2 Protocol*

The protocol described in ISO/IEC 14443-4 supports the transmission of application data (APDU = application data unit) between the reader and the smart card. The transmitted APDU can contain any desired data, such as command and response. The structure of this protocol is based heavily upon the *protocol* $T = 1$ (ISO/IEC 7816-3) that we know from contact smart cards, in order to keep the integration of this protocol into smart card operating systems that are already available, in particular dual interface smart cards, as simple as possible. The protocol defined in ISO/IEC 14443-4 is therefore often called $T = CL$.

The entire data transmission to an ISO/IEC 14443 card can also be represented in accordance with the *OSI layer model*, as Figure 9.27 shows. In this model, every layer independently takes on specific tasks and is thus transparent to the level above it. Layer 1, the physical layer, describes the transmission medium and the coding of the data at byte level. ISO/IEC 14443-2 provides two equivalent procedures here, Type A and Type B. Layer 2, the transport layer, controls the transmission of data between reader and smart card. Layer 2 automatically looks after the correct addressing of the data blocks (CID), the sequential transmission of excessively sized data blocks (chaining), the monitoring of the time procedure (FWT, WTX), and the handling of transmission errors. Layer 7, the application layer, contains the application data, i.e. the command to the smart card or the response to a command. In contactless smart cards the data structures used in the application layer are generally fully identical to those used in contact smart cards. This procedure is very worthwhile for dual interface smart cards in particular, because it means that the application layer is independent of the communications interface that is currently being used (contact, contactless). Layers 3–6

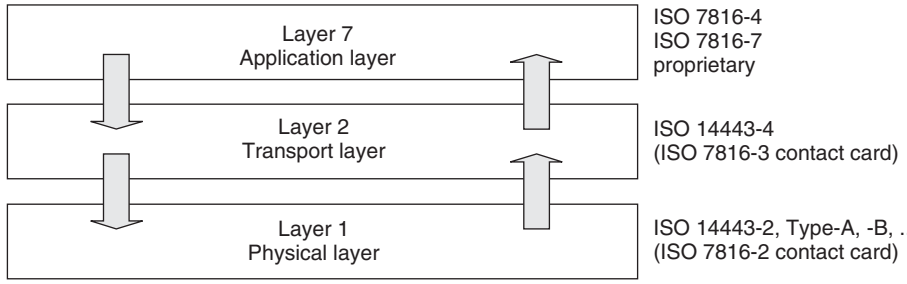


**Figure 9.27** The ISO/OSI layer model in a smart card

are used in complex networks for the determination and forwarding of data packets. In smart cards these layers of the OSI layer model are not used.

After the smart card has been activated (e.g. Type A after the transmission of the ATS and possibly a PPS) it waits for the first command from the reader. The sequence that now follows always corresponds with the master–slave principle, with the reader as master and the card as slave. The reader always sends a command to the smart card first, which executes the command and sends a response back to the reader. This pattern may never be broken; a smart card thus cannot initiate any communication with the reader.

The basic structure of a *data block (frame)* from the transport layer is shown in Figure 9.28. We differentiate between three types of blocks according to the method of functioning:

- *I block* (information block): Transmission of data from the application layer (APDU)
- *R block* (recovery block): Handling of transmission errors
- *S block* (supervisory block): Higher control of the protocol

The blocks are differentiated by different coding of the PCB (protocol control byte), as shown in Figure 9.29.

The optional CID (card identifier) is used for addressing an individual smart card in the interrogation zone of the reader. Thus, several smart cards can be activated at the same time and addressed selectively using their CID. The NAD byte (node address) was introduced in order to ensure compatibility between ISO/IEC 14443-5 and ISO/IEC 7816-3 ($T = 1$). The use of this byte is therefore not further defined in ISO/IEC 14443.

In the case of an I block, the information field (INF) serves as a container for the data of the application layer (APDU). The content is transmitted entirely transparently. This means that the content of the protocol is forwarded directly without analysis or evaluation.

Finally, a 16-bit *CRC* is appended as an EDC (error detection code) for error control.

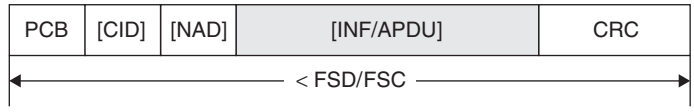


**Figure 9.28** Structure of the frame in ISO/IEC 14443. The data of the application layer, Layer 7 (grey), are packed into the protocol frame of the transport layer (white)

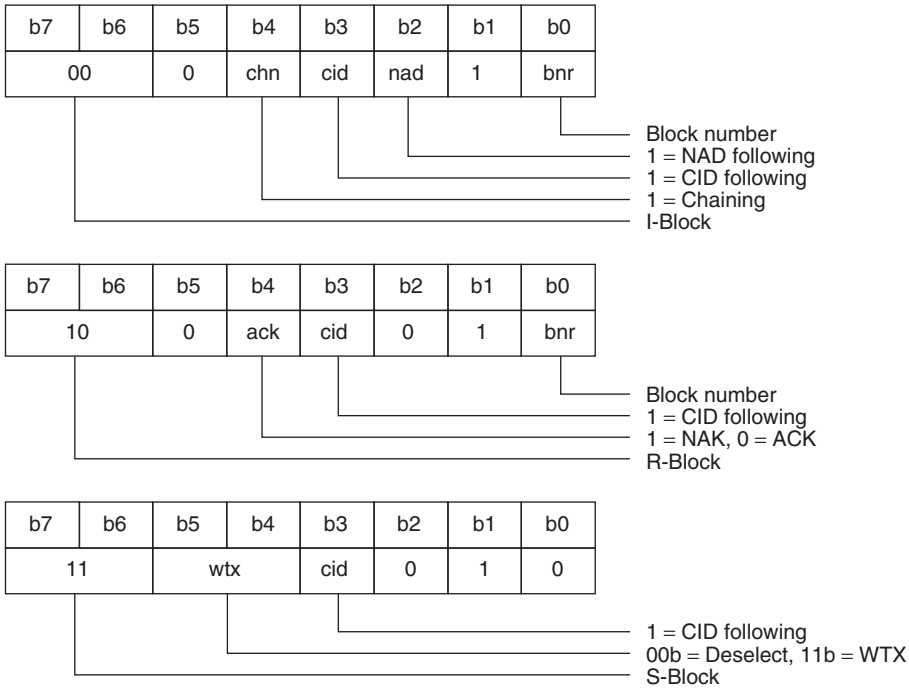


**Figure 9.29** Coding of the PCB byte in a frame. The entire transmission behaviour is controlled by the PCB (protocol control byte) in the protocol

## *9.2.3 ISO/IEC 15693 – Vicinity-Coupling Smart Cards*

The ISO/IEC standard 15693 entitled 'Identification cards – contactless integrated circuit(s) cards – Vicinity Cards' describes the method of functioning and operating parameters of contactless *vicinity-coupling smart cards*. These are smart cards with a range of up to 1 m, like those used in access control systems. The data carriers used in these smart cards are predominantly cheap memory modules with simple state machines (see Section 10.1.2.1).

The standard is made up of the following parts:

- Part 1: Physical characteristics
- Part 2: Air interface and initialization
- Part 3: Anti-collision and transmission protocol

### 9.2.3.1 Part 1 – Physical Characteristics

Part 1 of the standard defines the mechanical properties of proximity-coupling smart cards. The dimensions of the smart card correspond with those specified in ISO/IEC 7810, i.e. 85.72 × 54.03 × 0.76 mm ± tolerances.

Furthermore, this part of the standard includes additional notes for the testing of the dynamic bending stress and the dynamic torsion stress, plus irradiation with UV, X-ray and electromagnetic radiation.

#### 9.2.3.2 Part 2 – Air Interface and Initialization

The power supply of the inductively coupled *vicinity card* (*VICC*) is provided by the magnetic alternating field of a reader (*PCD*) at a transmission frequency of 13.56 MHz. The vicinity card incorporates a large area antenna coil for this purpose, typically with 3–6 windings of wire (see Figures 2.11 and 2.12).

The magnetic field to be generated by the reader must lie within the limit values 115 mA/m $\leq H \leq$ 7.5 A/m. Thus, it is automatically the case for the interrogation field strength $H_{\min}$ of a proximity-coupling smart card that $H_{\min} \leq$ 115 mA/m.

##### *9.2.3.2.1 Data Transfer Reader → Card*

Both 10% ASK and 100% ASK modulation are used for the data transfer from a reader to a vicinity smart card (see Section 6.2.1). Regardless of the selected modulation index, moreover, one of two different coding procedures can be selected: a '1 of 256' code or a '1 of 4' code.

A vicinity smart card must, in principle, support both modulation and coding procedures. However, not all combinations are equally practical. For example, 10% ASK modulation in combination with '1 of 256' coding should be given preference in 'long-distance mode'. The lower field strength of the modulation sidebands in comparison to the field strength of the (13.56 MHz) carrier signal in this combination permits the full exploitation of the permissible magnetic field strength for the power supply of the card (see FCC 15 Part 3: the permissible magnetic field strength of the modulation side bands lies 50 dB below the maximum field strength of the carrier signal of 42 dBμA/m here). By contrast, 100% ASK modulation in combination with '1 of 4' coding in readers can be used with reduced range or even shielded readers ('tunnel' readers on conveyor belts).

##### *9.2.3.2.2 '1 of 256' Coding*

This coding procedure is a *pulse position modulation* (*PPM*) procedure. This means that the value of the digit to be transferred is unambiguously defined in the value range 0–255 by the time position of a modulation pulse (Figure 9.30). Therefore, 8 bits (1 byte) can be transferred at the same time in one step. The total transmission time for a byte is 4.833 ms. This corresponds with 512 time slots of 9.44 μs. A modulation pulse can only take place at an uneven time slot (counting begins

**Table 9.13** Modulation and coding procedures in ISO/IEC 15693 (Berger, 1998)

| Parameter | Value | Comment |
|---|---|---|
| Power supply | 13.56 MHz ±7 kHz | Inductive coupling |
| Data transfer reader → card | | |
| Modulation | 10% ASK, 100% ASK | Card supports both |
| Bit coding | Long- distance mode: '1 of 256'<br>Fast mode: '1 of 4' | Card supports both |
| Baud rate | Long- distance mode: 1.65 Kbit/s<br>Fast mode: 26.48 Kbit/s | |
| Data transfer card → reader | | |
| Modulation | Load modulation with subcarrier | |
| Bit coding | Manchester, subcarrier is modulated with ASK (423 kHz) or FSK (423/485 kHz) | |
| Baud rate | Long-distance mode: 6.62 Kbit/s<br>Fast mode: 26.48 Kbit/s | Selected by the reader |

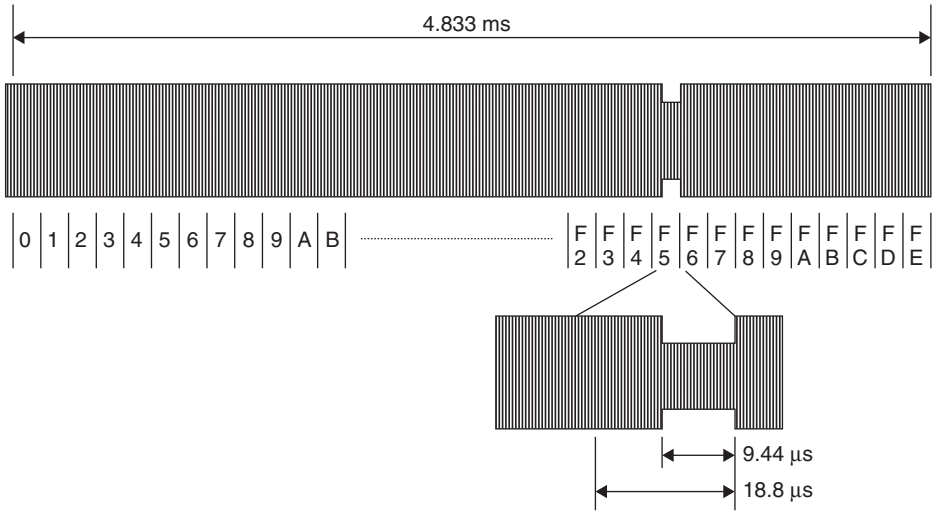


**Figure 9.30** The '1 of 256' coding is generated by the combination of 512 time slots of 9.44 µs length. The value of the digit to be transferred in the value range 0–255 can be determined from the position in time of a modulation pulse. A modulation pulse can only occur at an uneven time slot (1, 3, 5, 7, . . .)

at zero). The value $n$ of a transferred digit can easily be determined from the pulse position:

$$\text{Pulse position} = (2 \cdot n) + 1 \tag{9.1}$$

The data rate resulting from the transmission period of a byte (4.833 ms) is 165 Kbit/s.

The beginning and end of a data transmission are identified by defined frame signals – start-of-frame (SOF) and end-of-frame (EOF). The coding of the SOF and EOF signals selected in the standard is such that these digits cannot occur during a transmission of useful data (Figure 9.31). The unambiguity of the frame signals is thus always ensured.

The SOF signal in '1 of 256' coding consists of two 9.44-µs-long modulation pulses separated by a time slot of 56.65 µs (9.44 µs × 4, Figure 9.32).

The EOF signal consists of a single modulation pulse lasting 9.44 µs, which is sent at an even time slot in order to ensure its clear differentiation from a data byte (Figure 9.33).

#### *9.2.3.2.3 '1 of 4' Coding*

In this coding too, the time position of a modulation pulse determines the value of a digit. Two bits are transmitted simultaneously in a single step; the value of the digit to be transferred thus lies in the value range 0–3. The total transmission time for a byte is 75.52 µs, which corresponds with eight time slots of 9.44 µs. A modulation pulse can only be transmitted at an uneven time slot

| | | | | | |
|---|---|---|---|---|---|
| SOF | Byte 1 | Byte 2 | ... | Byte *N* | EOF |

**Figure 9.31** Structure of a message block (framing) made up of frame start signal (SOF), data and frame end signal (EOF)

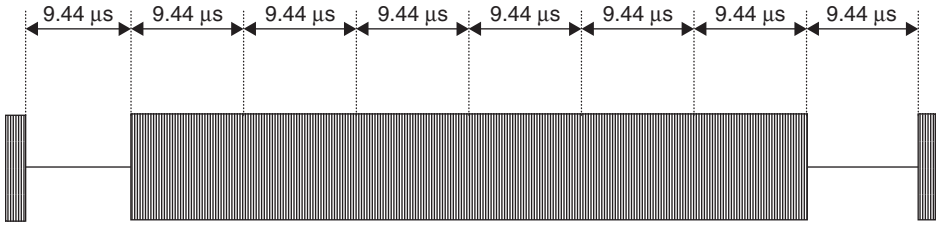


**Figure 9.32** Coding of the SOF signal at the beginning of a data transmission using '1 of 256' coding

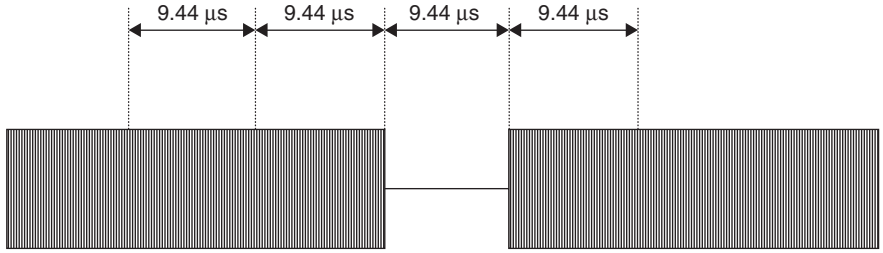


**Figure 9.33** The EOF signal consists of a modulation pulse at an even time slot ($t = 2$) and thus is clearly differentiated from useful data

(counting begins at zero). The value $n$ of a transmitted figure can easily be determined from the pulse position:

$$\text{Pulse position} = (2 \cdot n) + 1 \tag{9.2}$$

The data rate resulting from the time taken to transmit a byte (75.52 µs) is 26.48 Kbit/s.

In '1 of 4' coding the SOF signal is made up of two modulation pulses lasting 9.44 µs separated by an interval of 37.76 µs (Figure 9.34). The first digit of the useful data begins after an additional pause of 18.88 µs after the second modulation pulse of the SOF signal (Figure 9.35).

The conclusion of the transmission is identified by the familiar frame end signal (EOF).

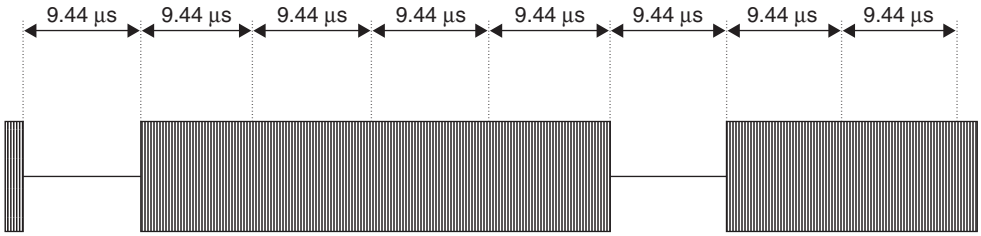


**Figure 9.34** The SOF signal of '1 of 4' coding consists of two 9.44 µs long modulation pulses separated by an interval of 18.88 µs

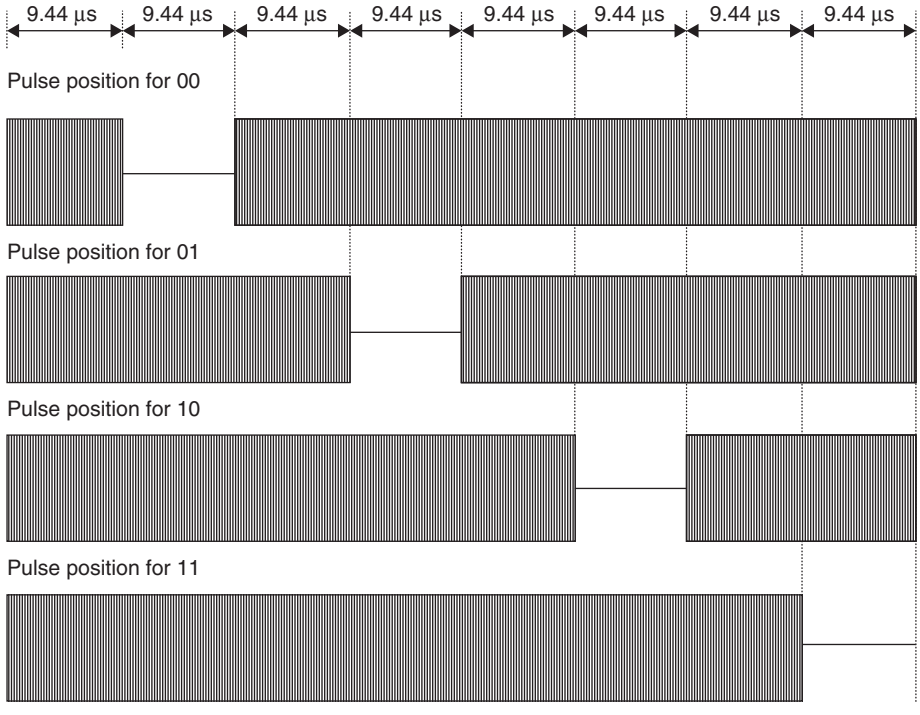


**Figure 9.35** '1 of 4' coding arises from the combination of eight time slots of 9.44 µs length. The value of the digit to be transmitted in the value range 0–3 can be determined from the time position of a modulation pulse

#### *9.2.3.2.4 Data Transfer Card → Reader*

Load modulation with a modulated subcarrier is used for the data transfer from a vicinity card to a reader. The ohmic or capacitive modulation resistor is switched on and off in time with the subcarrier frequency. The subcarrier itself is modulated in time with the Manchester coded data stream, using ASK or FSK modulation (Table 9.14). The modulation procedure is selected by the reader using a flag bit (control bit) in the header of the transmission protocol defined in Part 3 of the standard. Therefore, in this case too, both procedures must be supported by the smart card.

The data rate can also be switched between two values (Table 9.15). The reader selects the data rate by means of a flag bit (control bit) in the header of the transmission protocol, which means that, in this case too, the card must support both procedures.

**Table 9.14** Subcarrier frequencies for an ASK and FSK modulated subcarrier

| | ASK 'on–off keying' | FSK |
|---|---|---|
| Subcarrier frequency | 423.75 kHz | 423.75/484.28 kHz |
| Divider ratio to $f_c = 13.56$ MHz | $f_c/32$ | $f_c/32$; $f_c/28$ |

**Table 9.15** Data rates of the two transmission modes

| Data rate | ASK ('on–off keying') | FSK |
|---|---|---|
| Long-distance mode | 6.62 Kbit/s | 6.62/6.68 Kbit/s |
| Fast mode | 26.48 Kbit/s | 26.48/26.72 Kbit/s |

## *9.2.4 ISO/IEC 10373 – Test Methods for Smart Cards*

ISO 10373 provided a standard relating to the testing of cards with and without a chip. In addition to tests for the general quality characteristics, such as bending stiffness, resistance to chemicals, dynamic torsional stress, flammability, and dimensions of cards or the ultraviolet light resistance of the data carrier (since EEPROM memories lose their content when irradiated with UV light a special test has been developed to ensure nonsensitivity to this), specific test procedures have also been developed for the latest methods of data transmission or storage (magnetic strips, contact, contactless, optical). The individual test procedures for testing magnetic strips (ISO/IEC 7811), contact smart cards (ISO/IEC 7816) or contactless smart cards (ISO/IEC 14443, ISO/IEC 15693) were summarised in independent parts of the standard for the sake of providing an overview (Table 9.16).[7]

### 9.2.4.1 Part 4: Test Procedures for Close-Coupling Smart Cards

This part of the standard describes procedures for the *functional testing* of the physical interface of contactless *close-coupling smart cards* in accordance with ISO/IEC 10536. The test equipment consists of defined coils and capacitive coupling areas, which facilitate the evaluation of the power and data transmission between smart card and reader.

However, due to the secondary importance of close-coupling smart cards we will not investigate this procedure further at this point.

### 9.2.4.2 Part 6: Test Procedures for Proximity-Coupling Smart Cards

This part of the standard describes test procedures for the *functional testing* of the physical interface between contactless *proximity-coupling smart cards* and readers in accordance with ISO/IEC 14443-2. The test equipment consists of a *calibration coil*, a test set-up for the measurement of the load

**Table 9.16** ISO/IEC 10373, 'Identification Cards – Test methods'

| Part 1 | General |
|---|---|
| Part 2 | Magnetic strip technologies |
| Part 3 | Integrated circuit cards (contact smart cards) |
| Part 4 | Contactless integrated circuit cards (close-coupling smart cards in accordance with ISO/IEC 10536) |
| Part 5 | Optical memory cards |
| Part 6 | Proximity cards (contactless smart cards in accordance with ISO/IEC 14443) |
| Part 7 | Vicinity cards (contactless smart cards in accordance with ISO/IEC 15693) – currently still in preparation |

[7] However, in this section we will deal exclusively with the parts of the standard that are relevant to RFID systems, i.e. Part 4, Part 6 and Part 7.

modulation (PCD assembly test) and a *reference card* (reference PICC). This equipment is defined in the standard.

#### *9.2.4.2.1 Calibration Coil*

To facilitate the measurement of the magnetic field strength generated by a reader without complicated and expensive measuring equipment, the standard first describes the layout of a calibration coil that permits the measurement of magnetic field strengths in the frequency range of 13.56 MHz with sufficient accuracy, even with a simple oscilloscope.

The calibration coil is based upon an industry-standard copper coated FR4 printed circuit board and smart card dimensions in accordance with ISO/IEC 7810 (72 × 42 × 0.76 mm). A conductor coil (i.e. a coil with one winding) with dimensions 72 × 42 mm is applied onto this base board using the normal procedure for the manufacture of printed circuits. The sensitivity of the calibration coil is 0.3 Vm/A. However, during the field strength measurement particular care should be taken to ensure that the calibration coil is only subjected to high-ohmic loads by the connected measuring device (sensing head of an oscilloscope), as every current flow in the calibration coil can falsify the measurement result.

If the measurement is performed using an oscilloscope, then the calibration coil is also suitable for the evaluation of the switching transitions of the ASK modulated signal from a reader. Ideally, a reader under test will also have a test mode, which can transmit the endless sequence 10101010 for the simpler representation of the signal on the oscilloscope.

#### *9.2.4.2.2 Measuring the Load Modulation*

The precise and reproducible measurement of the load modulation signal of a proximity-coupling smart card at the antenna of a reader is very difficult due to the weak signal. In order to avoid the resulting problems, the standard defines a measuring bridge, which can be used to compensate the reader's (or test transmitter's) own strong signal. The measuring arrangement for this described in the standard consists of a *field generator coil* (transmission antenna) and two parallel sensor coils in phase opposition. The two sensor coils ('reference coil' and 'sense coil') are located on the front and back of the field generator coil, each at the same distance from it, and are connected in phase opposition to one another (Figures 9.36 and 9.37), so that the voltages induced in the coils cancel each other out fully. In the unloaded state, i.e. in the absence of a load from a smart card or another

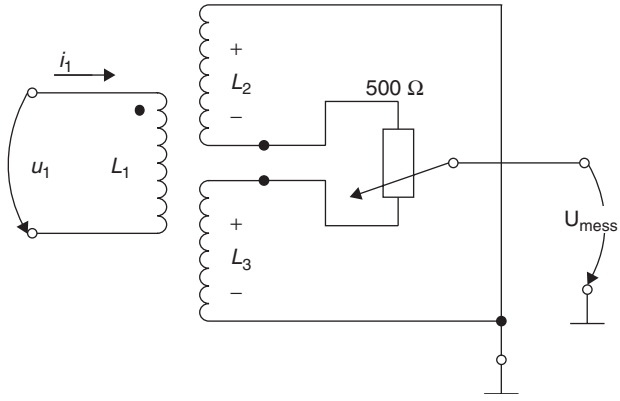


**Figure 9.36** Measuring bridge circuit for measuring the load modulation of a contactless smart card in accordance with ISO/IEC 14443

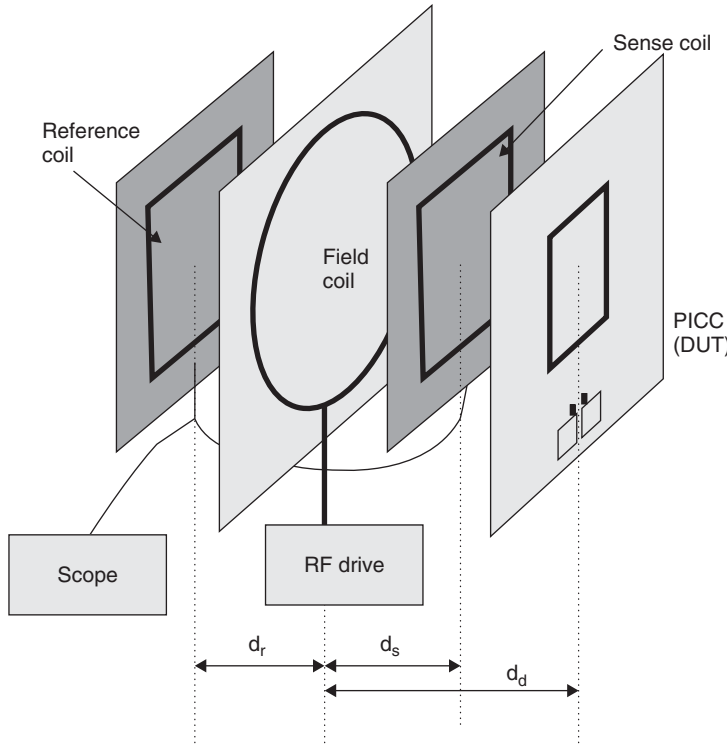


**Figure 9.37** Mechanical structure of the measurement bridge, consisting of the field generator coil (field coil), the two sensor coils (sense and reference coil) and a smart card (PICC) as test object (DUT) (reproduced by permission of Philips Semiconductors, Hamburg)

magnetically coupled circuit, the output voltage of this circuit arrangement therefore tends towards zero. A low residual voltage, which is always present between the two sensor coils as a result of tolerance-related asymmetries, can easily be compensated by the potentiometer.

The following procedure should be followed for the implementation of the measurement. The smart card to be tested is first placed on the measuring bridge in the centre of the sense coil. As a result of the current flowing through the smart card coil, a voltage $u_s$ is induced in the neighbouring sense coil. This reduces the symmetry of the measurement arrangement, so that an offset voltage is set at the output of the measurement circuit. To prevent the falsification of the measurement by an undefined offset voltage, the symmetry of the measurement arrangement must be recreated with the measurement object in place by tuning the potentiometer. The potentiometer is correctly set when the output voltage of the measurement bridge reaches a minimum ($\rightarrow 0$).

After the measurement bridge has been adjusted, the reader connected to the field coil sends a REQUEST command to the smart card under test. Now, if the smart card begins to send a response to the reader by load modulation, the symmetry of the measuring bridge is disrupted in time with the switching frequency (this corresponds with the subcarrier frequency $f_s$) as a result of the modulation resistor in the smart card being switched on and off. As a result, a subcarrier modulated RF voltage can be measured at the measurement output of the measuring bridge. This signal is sampled over several periods using a digital oscilloscope and then brought into the frequency range by a discrete Fourier transformation. The amplitudes of the two modulation sidebands $f_c \pm f_s$ that can be seen

in the frequency range now serve as the quality criterion for the load modulator and should exceed the limit value defined in ISO/IEC 14443.

The layout of the required coils, a circuit to adapt the field coil to a 50Ω transmitter output stage, and the precise mechanical arrangement of the coils in the measuring arrangement are specified in the Annex to the standard, in order to facilitate its duplication in the laboratory (see Section 14.4).

#### *9.2.4.2.3 Reference Card*

As a further aid, the standard defines two different reference cards that can be used to test the power supply of a card in the field of the reader, the transient response and transient characteristics of the transmitter in the event of ASK modulation, and the demodulator in the reader's receiver.

*Power supply and modulation*. With the aid of a defined *reference card* it is possible to test whether the magnetic field generated by the reader can provide sufficient energy for the operation of a contactless smart card. The principal circuit of such a reference card is shown in Figure 9.38. This consists primarily of a transponder resonant circuit with adjustable resonant frequency, a bridge rectifier, and a set of load resistors for the simulation of the data carrier.

To carry out the test, the reference card is brought within the interrogation zone of a reader (the spatial characteristics of the reader's interrogation field are defined by the manufacturer of this device and should be known at the start of the measurement). The output voltage $U_{meas}$ of the reference card is now measured at defined resonant frequencies ($f_{res} = 13-19$ MHz) and load resistances (910, 1800 Ω) of the reference card. The test has been passed if the voltage within the interrogation zone does not fall below a lower limit value of 3 V.

*Load modulation*. A second *reference card* can be used to provide a test procedure that makes it possible to test the adherence of the receiver in the reader to a minimum necessary sensitivity. The circuit of this test card largely corresponds with the circuit from Figure 9.38, but it has an additional load modulator.

To carry out the test, this reference card is brought into the interrogation zone of a reader, this interrogation zone being defined by the manufacturer. The reference card thus begins to transmit a continuous subcarrier signal (847 kHz in accordance with ISO/IEC 14443) by load modulation to the reader and this signal should be recognised by the reader within a defined interrogation zone. The reader under test ideally possesses a test mode for this purpose, in which the operator can be alerted to the detection of a continuous subcarrier signal.

### 9.2.4.3 Part 7: Test Procedure for Vicinity-Coupling Smart Cards

This part of the standard describes test procedures for the functional testing of the physical interface between contactless smart cards and readers in accordance with ISO/IEC 15693-2. The test

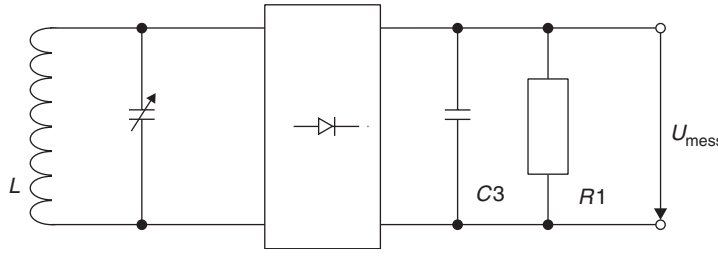


**Figure 9.38** Circuit of a reference card for testing the power supply of a contactless smart card from the magnetic RF field of a reader

equipment and testing procedure for this largely correspond with the testing equipment defined in Part 6. The only differences are the different subcarrier frequencies in the layout of the reference card (simulation of load modulation) and the different field strengths in operation.

## 9.3 ISO/IEC 69873 – Data Carriers for Tools and Clamping Devices

This standard specifies the dimensions for contactless data carriers and their mounting space in tools and cutters (Figure 9.39). Normally the data carriers are placed in a *quick-release taper shaft* in accordance with *ISO/IEC 69871* or in a *retention knob* in accordance with *ISO/IEC 69872*. The standard gives installation examples for this.

The dimensions of a data carrier are specified in *ISO/IEC 69873* as $d_1 = 10$ mm and $t_1 = 4.5$ mm. The standard also gives the precise dimensions for the mounting space.

## 9.4 ISO/IEC 10374 – Container Identification

This standard describes an automatic identification system for containers based upon microwave transponders. The optical identification of containers is described in the standard *ISO/IEC 6346* and is reflected in the data record of the transponder-based *container identification*.

Active – i.e. battery supported – microwave transponders are used. These are activated by an unmodulated carrier signal in the frequency ranges 850–950 and 2400–2500 MHz. The sensitivity of the transponder is defined with an electric field strength $E$ of a maximum of 150 mV/m. The transponder responds by backscatter modulation (modulated reflection cross-section), using a modified FSK subcarrier procedure (Figure 9.40). The signal is modulated between the two subcarrier frequencies 40 and 20 kHz.

The transmitted data sequence corresponds with the example in Table 9.17.

## 9.5 VDI 4470 – Anti-theft Systems for Goods

### *9.5.1 Part 1 – Detection Gates – Inspection Guidelines for Customers*

The VDI 4470 guideline provides a practical introduction to the inspection and testing of installed systems for electronic article surveillance (EAS) systems (Figure 9.41). It describes definitions and test procedures for checking the decisive system parameters – the *false alarm rate* and the *detection rate*. The term 'false alarms' is used to mean alarms that are not triggered by an active security tag, whereas the detection rate represents the ratio of alarms to the total number of active tags.

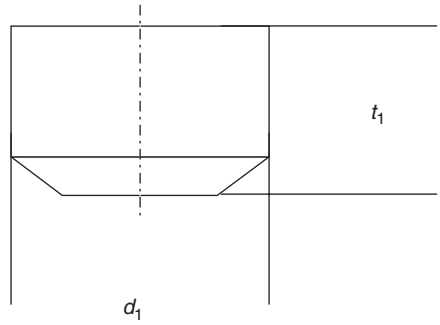


**Figure 9.39** Format of a data carrier for tools and cutters

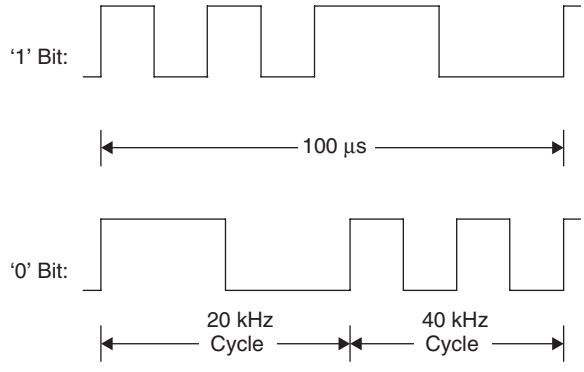


**Figure 9.40** Coding of data bits using the modified FSK subcarrier procedure

**Table 9.17** Data sequence of a container transponder

| Bit number | Data | Unit | Minimum value | Maximum value |
|---|---|---|---|---|
| 0–4 | Object recognition | – | 1 | 32 |
| 5–6 | Reflector type | Type code | 0 | 3 |
| 7–25 | Owner code | Alphabetic | AAAA | ZZZZ |
| 26–45 | Serial number | Numeric | 000000 | 999999 |
| 46–49 | Check digit | Numeric | 0 | 9 |
| 50–59 | Length | Centimetre | 1 | 2000 |
| 60–61 | Checksum | – | – | – |
| 62–63 | Structure bits | – | – | – |
| 64 | Length | – | – | – |
| 65–73 | Height | Centimetre | 1 | 500 |
| 74–80 | Width | Centimetre | 200 | 300 |
| 81–87 | Container format | Type code | 0 | 127 |
| 88–96 | Laden weight | 100 kg | 19 | 500 |
| 97–103 | Tare weight | 100 kg | 0 | 99 |
| 104–105 | Reserve | – | – | – |
| 106–117 | Security | – | – | – |
| 118–123 | Data format code | – | – | – |
| 124–125 | Checksum | – | – | – |
| 126–127 | Data frame end | – | – | – |

#### 9.5.1.1 Ascertaining the False Alarm Rate

The number of false alarms should be ascertained immediately after the installation of the EAS system during normal business. This means that all equipment, e.g. tills and computers, are in operation. During this test phase the products in the shop should not be fitted with security tags. During a monitoring period of one to three weeks an observer records all alarms and the conditions in which they occur (e.g. person in gates, cleaning, storm). Alarms that are caused by a security tag being carried through the gates by accident (e.g. a tag brought from another shop) are not counted.

**Figure 9.41** Electronic article surveillance system in practical operation (reproduced by permission of METO EAS-System 2002, Esselte Meto, Hirschborn)

#### 9.5.1.2 Ascertaining the Detection Rate

The detection rate may be ascertained using either real or artificial products.

*Real products*. In this case a number of representative products vulnerable to theft are selected and carried through the gateways by a test person in a number of typical hiding places – hood, breast pocket, shoe, carrier bag, etc. When selecting test products, remember that the material of a product (e.g. metal surfaces) may have a quite marked effect on the detection rate.

The detection rate of a system is calculated as the proportion of alarms triggered to the totality of tests carried out.

*Artificial products*. This test uses a wooden rod with a tag in the form of a label attached to the middle. A test person carries this reference object through reference points in the gateway that are precisely defined by VDI 4470 at a constant speed.

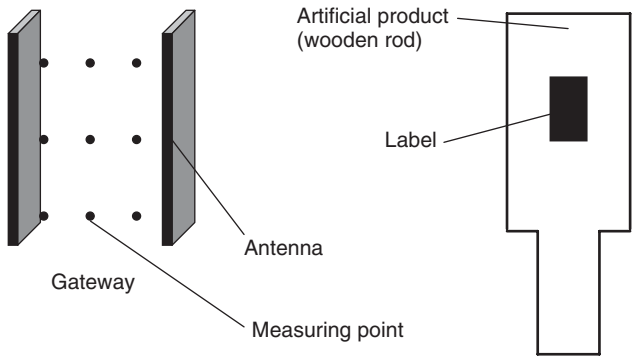


**Figure 9.42** Left, measuring points in a gateway for inspection using artificial products; right, artificial product

**Table 9.18** Forms available in VDI 4 470

| | |
|---|---|
| Form 1 | 'Test for False Alarms' |
| Form 2 | 'Test with Real Products' |
| Form 3a | 'Test with Artificial Products' |
| Form 3b | 'Test with Artificial Products' |
| Form 4a | 'Test with Artificial Products' |
| Form 4b | 'Test with Artificial Products' |

The detection rate of a system is calculated as the proportion of alarms triggered to the totality of tests carried out.

#### 9.5.1.3 Forms in VDI 4470

In order to simplify the testing of objects and to allow tests to be performed in a consistent manner in all branches, VDI 4470 provides various forms:

### *9.5.2 Part 2 – Deactivation Devices – Inspection Guidelines for Customers*

As well as the option of removing hard tags (e.g. microwave systems) at the till, various tags can also be 'neutralised', i.e. deactivated (e.g. RF procedure, electromagnetic procedure).

The objective is to achieve the complete deactivation of all tags placed in a *deactivation device*, in order to avoid annoying or worrying customers by unjustified false alarms. Deactivation devices must therefore generate optical or acoustic signals, which indicate either a successful or an unsuccessful deactivation.

Deactivation devices are tested during the normal activities of the shop. A minimum of 60 protected products are required, which are checked for functionality before and after the test. The protected products are each put into/onto the deactivation device one after the other and the output from the signalling device recorded.

To ascertain the *deactivation rate* the successfully deactivated tags are divided by the total number of tags. This ratio must be 1, corresponding with a 100% deactivation rate. Otherwise, the test has not been successful.

## 9.6 Item Management

### *9.6.1 ISO/IEC 18000 Series*

A whole range of standards on the subject of *item management* is now available. These newer standards fit smoothly into the large number of older standards that were developed based on barcodes. The following standards are relevant for RFID:

- ISO/IEC 15961: 'RFID for *Item Management*: Host Interrogator; Tag functional commands and other syntax features'
- ISO/IEC 15962: 'RFID for *Item Management*: Data Syntax'
- ISO/IEC 15963: 'Unique Identification of RF tag and Registration Authority to manage the uniqueness'

  Part 1: Numbering System

Part 2: Procedural Standard
Part 3: Use of the unique identification of RF tag in the integrated circuit

- ISO/IEC 18000: 'RFID for Item Management: Air Interface'

  Part 1: Generic Parameter for Air Interface Communication for Globally Accepted Frequencies
  Part 2: Parameters for Air Interface Communication below 135 kHz
  Part 3: Parameters for Air Interface Communication at 13.56 MHz
  Part 4: Parameters for Air Interface Communication at 2.45 GHz
  Part 5: Parameters for Air Interface Communication at 5.8 GHz
  Part 6: Parameters for Air Interface Communication – UHF Frequency Band
  Part 7: Parameters for Air Interface Communication at 433 MHz
- ISO/IEC 18001: 'Information technology – RFID for Item Management – Application Requirements Profiles'

#### 9.6.1.1 ISO/IEC 15691 and 15692

To use an application to write data on a transponder or to read them out requires different processes. Figure 9.43 shows a typical installation of an RFID system and the assignment of the different processes to individual standards.

The application usually is installed on the control computer of a robot or on a central processor sends out commands or when necessary also data (application command) to the control system of the RFID reader (data protocol processor, DPP). Standard ISO/IEC 15691 specifies the admissible commands, responses or possible error messages.

If an application sends a write command with a data set to the reader, the command/response unit (CRU), i.e. the reader's control unit, will receive and evaluate the command. The memory of the transponder is usually divided into *blocks*, and often even into superordinated *segments*. Therefore

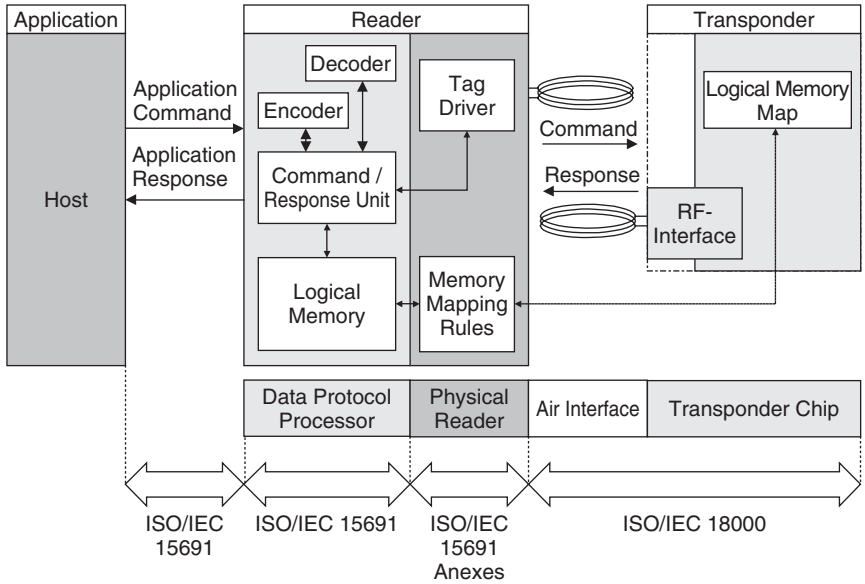


**Figure 9.43** Relation between different standards of the ISO 18000 series

it can only be read and written in blocks (see Section 10.1.3.4). The data sent by the application can therefore not be written one-on-one into the transponder, but must be segmented and sent in a form that corresponds to the segmentation of the transponder memory. Therefore the data will initially be written into an intermediate memory, the logical memory. Here, a *data compactor* compresses the data in order to save valuable storage space on the transponder. Using the mapping rules specified in ISO/IEC 15692, the data is segmented in order to write them blockwise onto the transponder. The data protocol processor itself does not communicate with the transponder, but activates the tag driver which converts the command received by the application into the transponder-specific write command, sends it to the transponder and receives the transponder's response. The response received by the transponder is converted into the corresponding application response and returned to the CRU. The CRU now sends the received response back to the application.

The command for reading a memory range or a data object stored in the transponder works according to the same principle. Only the sequence is somewhat different as the transponder's memory is initially read out sectorwise and blockwise and the received data are written into the logical memory according to the mapping rules, before the CRU sends it on to the application.

The data to be written into the transponder are always interpreted and treated as *data objects*. A data object is an array of bytes with a clearly specified meaning. In order to clearly differentiate the data objects, they are preceded by an object ID (OID) which determines how the application has to define the subsequent bytes. Standards ISO/IEC 8824-1 and ISO/IEC 9834-1 specify object IDs for logistics applications and are also used for *barcode readers*.

At first glance, the specified sequence appears rather complicated. The special advantage of this procedure is that each application command can be processed completely independent of the reader's transmission frequency, the protocol defined for the contactless transmission route and the memory configuration of the transponder. Such a system is very flexible and can be easily extended with future transponder types or even with new transmission processes or protocols at the contactless interface without the necessity to adapt the application. If we write on a transponder in a specific system implementation, it may be possible to read the transponder out in another, completely unknown system implementation, without any problems and maybe even at the other side of the world.

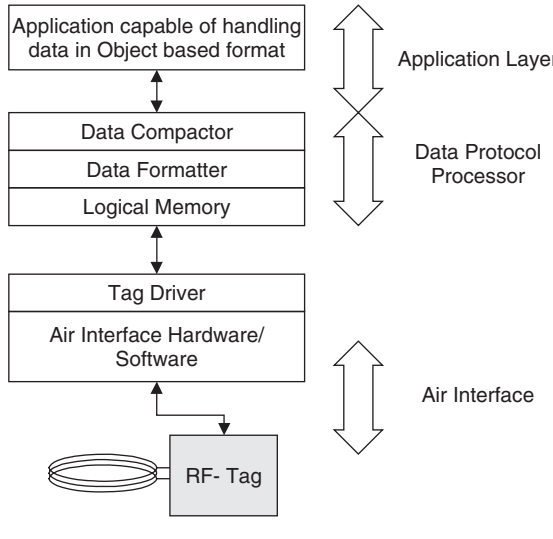


**Figure 9.44** A command passes through several hardware and software layers specified by the existing standards

## 9.6.2 GTAG Initiative

A further initiative, GTAG (global tag), is jointly supported by the EAN (European Article Numbering Association) and the UCC (Universal Code Council). According to a statement by the two organisations themselves, the work of EAN and UCC is 'to improve supply chain management and other business processes that reduce costs and/or add value for both goods and services, EAN International and UCC develop, establish and promote global, open standards for identification and communication for the benefit of the users involved and the ultimate consumer' (EAN.UCC, 1999).

EAN.UCC systems are used worldwide by almost a million companies from extremely different industries for the identification of goods. The best known is the barcode, which can be found upon all consumer goods, and which is read at the supermarket till. The codes used, however, do not facilitate the classification of the goods, but serve only as a unique identification (AI = a*pplication* i*dentifier*) that allows the item to be looked up in a database.

Electronic document interchange (EDI) (defined in UN/EDIFACT) represents a further field of application of EAN.UCC systems (EAN.UCC, 2000).

The specifications currently under development facilitate the coexistence of *barcode* and transponder with full compatibility from the point of view of the user. This permits flowing migration from barcodes to transponder systems, with the focus initially being placed upon applications relating to *transport containers* and reusable packaging (Osborne, n.d.). The requirements of such standardisation are diverse, since all parameters of such a system must be precisely specified in order to guarantee that the transponder can be implemented universally. The GTAG specification of EAN.UCC will therefore deal with three layers: the transport layer, the communication layer, and the application layer.

- The *transport layer* describes the physical interface between transponder and reader, i.e. transmission frequency, modulation frequency and data rate. The most important factor here is the selection of a suitable frequency so that EAN.UCC systems can be used worldwide without restrictions and can be manufactured at a low cost. Furthermore, the GTAG specification for the transport layer will flow into the future ISO/IEC 18000-6 standard (Osborne, n.d.).
- The *communication layer* describes the structure of the data blocks that are exchanged between transponder and reader. This also includes the definition of an anticollision procedure, plus the description of commands for the reading or writing of the transponder.
- The *application layer* includes the organisation and structure of the application data stored on the transponder. GTAG transponders will include at least an EAN.UCC application identifier (AI) (EAN.UCC, 2000). This AI was developed for data carriers with low storage capacity (barcodes). RFID transponders, however, permit additional data and provide the option of changing data in the memory, so that the GTAG specification will contain optional data fields and options.

### 9.6.2.1 GTAG Transport Layer (Physical Layer)

In order to be able to fulfil the requirements of range and transmission speed imposed on GTAG, the *UHF frequency range* has been selected for the transponders. However, one problem in this

Radio Frequency Identification (RFID)
Performance Standards Initiative

**Figure 9.45** Official logo of the GTAG initiative (http://www.ean-int.org)

**Table 9.19** Provisional technical parameters of a GTAG reader

| Parameter | Value |
|---|---|
| Transmission frequency and power of the reader | 862–928 MHz, 2–4 W (depending upon regulations) |
| Down-link | 40% ASK pulse time modulation, '1 of 4' coding |
| Anticollision procedure | Dynamic slotted ALOHA procedure |
| Maximum number of transponders in the field | 250 |

**Table 9.20** Provisional technical parameters of a GTAG transponder

| Parameter | Value |
|---|---|
| Minimum frequency range of transponder | 862–928 MHz |
| Uplink | Backscatter (Delta RCS), bi-phase code |
| Bit rate | Slow: 10 Kbit/s, fast: 40 Kbit/s |
| Delta RCS | $>0.005\,m^2$ |

frequency range is local differences in frequency regulations. For example, 4 W EIRP transmission power is available for RFID systems in the frequency range 910–928 MHz in America. In Europe, the ERO (European Radiocommunications Organisation) has allocated 2 W ERP transmission power – corresponding to 3.8 W EIRP – to the frequency range 865.6–867.6 MHz.

Due to the different frequency ranges of the readers, GTAG transponders are designed so that they can be interrogated by a reader over the entire 862–928 MHz frequency range. It makes no difference in the case of backscatter transponders whether the reader uses a fixed transmission frequency (Europe) or changes the transmission frequency at periodic intervals (*frequency hopping spread spectrum*, USA and Canada).

#### 9.6.2.2 GTAG Communication and Application Layer

The GTAG communication and application layers are described in the MP&PR specification (minimum protocol and performance requirement). The *MP&PR* (GTAG-RP) defines the coding of data on the contactless transmission path, the construction of a communication relationship between reader and transponder (anticollision and polling), the memory organisation of a transponder, and numerous commands for the effective reading and writing of the transponder.

The memory of a GTAG transponder is organised into blocks, each of 128 bits (16 bytes). The GTAG specification initially permits only the addressing of a maximum of 32 pages, so that a maximum of 512 bytes can be addressed. However, it should be assumed that for most applications it is sufficient for a data set identical to the barcode in accordance with *EAN/UCC-128* to be stored in a page of the transponder.

### *9.6.3 EPCglobal Network*

The *EPCglobal Network* is a technology that allows *trading partners* to document and determine the location of individual goods and commodities within the *supply chain*, if possible in real time. Even additional information about the goods and commodities, such as production and use-by date of a product, can be easily exchanged between trading partners.

The EPCglobal Network uses the Internet, which is everywhere available today, and adds specific services, such as *Object Naming Service (ONS)* and *EPC Information Service (EPCIS)*. The objects are registered with RFID readers that are connected via a software interface with the Internet services of EPCglobal Network. The combination of data acquisition via RFID technology with providing, distributing and connecting these data via existing Internet technology offers a large potential not only for improved efficiency, but also for precise *logistics processes* in national and international trading.

The EPCglobal Network defines and uses the following five basic services (EPCglobal, 2004):

- *Electronic product code* (EPC), a unique number for identifying individual objects in a supply chain.
- The identification system consisting of EPC transponder and readers. The transponder which is attached to outer packages, palettes or individual products contains the electronic product code. The readers can read out the EPC from the transponders and route it via EPC middleware into the network.
- *EPCglobal Middleware* administrates the information made available by readers und constitutes a software interface in the EPCglobal Network.
- *Discovery Services (DS)*, a group of services that allow the user to find data regarding a certain EPC in the EPCglobal Network. The Object Naming Services (ONS) also belong to the Discovery Services.
- EPC Information Services (EPCIS) that allow users to exchange EPC-related data via EPCglobal Network with their trading partners.

For an initial overview of network functionalities, we will compare specific network services of EPCglobal Network (Table 9.21) and the World Wide Web (according to McLaughlin, 2004).)

For data acquisition, cost-efficient transponders are used. They only need a unique number – the EPC – that is attached to the goods, commodities and other objects that move through the supply chains of trading partners. Transponders will be read at strategically positioned readers within the supply chain, such as at goods-in or goods-out points. Together with registration time, date and location, the registered EPCs will then be forwarded to the EPCglobal Network. The middleware on a local computer will serve as interface between local readers and EPCglobal Network.

Using Internet technology, the EPCglobal Network now forms a network that allows authorized trading partners of a supply chain to exchange previously registered data. The Discovery Services make it possible to find EPC-related data in the EPCglobal Network. Access to EPC-related data is controlled by EPC Information Services (EPCIS). Here, the companies themselves determine which trading partner is given access to registered data. The result is an information network that can be used for real-time tracking of goods through the supply chains.

**Table 9.21** A comparison of EPCglobal Network-specific services and WWW services

| World Wide Web | EPCglobal network |
|---|---|
| DNS (domain name server): authoritative system that routes requests for websites and email | ONS: authoritative record of manufacturers that routes requests for product information |
| Web Sites: resource that contains information on a particular topic | EPC Information Services: resource for specific information about a product. e.g. date of expiry |
| Search Engines: tool for finding websites on the network | EPC Discovery Services: tool for finding EPC information services on the network |
| Security Services: provide trusted access control and information sharing | EPC Trust Services: provide security and access control for EPC product data |

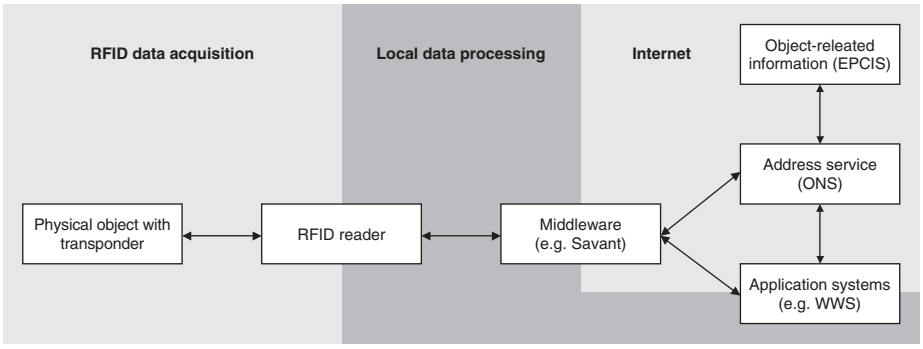


**Figure 9.46** Interaction of different components of the EPCglobal Network (WWW: Warenwirtschaftssysteme), according to EPC Forum (n.d.)

#### 9.6.3.1 Generation 2

In 1999, EPCs started when the especially founded *Auto-ID-Center* began to develop the necessary technology and network architecture. The goal was to create a cost-efficient, global and open-source system. At this point it was decided to develop less complex original standards for the communication between transponder and reader that could be implemented more cost-efficiently than existing RFID standards (EPC Forum, n.d.).

In 2003, *EAN* international and *UCC* founded *EPCglobal Inc*. and thus created a worldwide, open nonprofit organisation for the international implementation of EPCglobal Network. Taking on the standardization work of the Auto-ID-Center, EPCglobal Inc. began to develop a new generation of communication standards between transponder and reader, the so called Gen2 Protocol. The Gen2 standard provides a uniform, globally valid protocol which, however, is not backwards compatible with the previous Auto-ID-Center standard (EPC Forum, n.d.).

The gen2 protocol has several advantages compared to the preceding version:

- A specific *dense reader mode* prevents adjacent readers from interfering.
- An improved segmentation of the memory supplied by the transponder into four independent sectors. This way, individual users can write their own data, e.g. product and supply information, on the transponder.
- Migration of barcode applications to transponders is facilitated as several transponders can get an identical EPC which allows to treat transponders virtually as barcodes.
- A changed bit coding on the RF interface improves the detection rate of transponders to be read.

#### 9.6.3.2 Standards and Specifications

EPCglobal Inc. provides specifications for EPCglobal Network in order to create international standards for the operation and installation of the EPCglobal Network. Currently, the following specifications and ratified standards are available:

***EPCglobal Specifications***

EPCglobal Specifications are still mainly the result of work carried out at MIT's Auto-ID-Center and form the basis of EPC/RFID technology.

- 900 MHz Class 0 Radio Frequency (RF) Identification Tag Specification. This document specifies the communication interface and the protocol for Class 0 transponders in the frequency range around 900 MHz.
- 13.56 MHz ISM Band Class 1 Radio Frequency Identification Tag Interface Specification. This document specifies the communication interface and the protocol for Class 1 transponders in the frequency range of 13.56 MHz.
- 860–930 MHz Class 1 Radio Frequency Identification Tag Radio Frequency and Logical Communication Interface Specification. This document specifies the communication interface and the protocol for Class 1 transponders in the frequency range 860 to 930 MHz.
- Class 1 Generation 2 UHF RFID Conformance Requirements Specification v. 1.0.2. This document specifies the defaults for keeping physical parameters and command structures for Class 1 Generation 2 transponders in the frequency range 860–900 MHz.
- EPCglobal Architecture Framework Version 1.0. This document defines and describes the basic architecture of the EPCglobal Network.

The *Ratified EOCglobal Standards* are the result of joint standardization efforts of a large number of companies that cooperate in several EPCglobal Action and Working Groups. An EPCglobal Standard only materializes when the specification is ratified by the EPCglobal Board of Governors.

- EPC Tag Data Standard Version 1.1 rev 1.27. This EPCglobal Standard describes coding of a consecutively numbered version of EAN.UCC Global Trade Item Number (GTING®) of SGTIN, the EAN-UCC Serial Shipping Container Code (SSCC®), the EAN.UCC Global Location Number (GLN®), the EAN.UCC Global Returnable Asset Identifier (GRAI®) as well as a universal identification code, the General Identifier (GID).
- Class 1 Generation 2 UHF Air Interface Protocol Standard version 1.0.9. This standard specifies the physical and logical interface for a passive backscatter system in the UHF frequency range 860–960 MHz.
- Application Level Event (ALE) Specification Version 1.0. This standard specifies an interface for prompting Electronic Product Code data from different sources.
- Object Naming Service (ONS) Specification Version 1.0. This standard describes the use of a DNS (domain name system) for localizing data linked by an SGTIN in the Internet. The document thus describes the implementation of Object Naming Services (ONS).

### The Electronic Product Code (EPC)

The EPC is a sort of licence plate with a unique number which allows to clearly and individually identify a marked object. As opposed to barcodes using barcode readers to assign a good to a specific article, the EPC can also have a consecutive number which allows it to identify each individual part of an article for itself.

The EPC is stored on the transponder as a string of bits. In general, the EPC consists of a header with variable length and a number of data fields whose length, structure and function are determined by the header value. Currently, EPCs with a total length of 64 bits and 96 bits are specified.

In addition to SGTIN-65 (serialized global trade item number) and SGTIN-96 encoding used by the EPCglobal Network for article tagging, EPC also supports several other encoding schemes such as *GID-96* (general identifier, 96 bit), *SSCC* (serial shipping container code), *SGLN* (serialized global location number), *GRAI* (global individual asset identifier) and the *DoD* identifier (defined by the United States Department of Defense). Currently there are 13 different encoding schemes defined by EPCglobal. Table 9.22 presents the assignment of header values to different encoding schemes (EPCglobal, 2005).

In the following, we will take a closer look at SGTIN and GIAI as examples for the encoding of an EPC.

**Table 9.22** Assignment of header values to different encoding schemes

| Header value (binary) | EPC length (bit) | Encoding scheme |
|---|---|---|
| 10 | 64 | SGTIN-64 |
| 1100 1110 | 64 | DoD-64 |
| 0000 1000 | 64 | SSCC-64 |
| 0000 1001 | 64 | GLN-64 |
| 0000 1010 | 64 | GRAI-64 |
| 0000 1011 | 64 | GIAI-64 |
| 0010 1111 | 96 | DoD-96 |
| 0011 0000 | 96 | SGTIN-96 |
| 0011 0001 | 96 | SSCC-96 |
| 0011 0010 | 96 | GLN-96 |
| 011 011 | 96 | GRAI-96 |
| 0011 0100 | 96 | GIAI-96 |
| 0111 0101 | 96 | GID-96 |

#### *9.6.3.2.1 SGTIN*

The *SGTIN* (serialized global trade item number) is used to unambiguously identify individual goods in a *supply chain*. There is a 64-bit version and a 96-bit version of SGTIN.

As shown in Table 9.23, the 96-bit-long SGTIN-96 consists of six data fields, *Header, Filter value, Partition, Company prefix, Item reference* and *Serial number*. SGTIN-96 starts with header value 00110000b. The 'Filter value' is not a direct part of GTIN, but allows a preselection of single shippings, such as a bicycle or a large TV, as well as of different types of standard trade item groupings. The data fields 'Company prefix' and 'Item reference' can have varying lengths, but have always to add up to 44 bits. The assignment of these 44 bits to the two fields is defined by the value of the field 'Partition'.

The 'Company prefix' contains a number that identifies the company that issued the read-out EPC, the EPCglobal Manager. Usually, this is the manufacturer of the product. The field 'Item reference' describes the article class, whereas the 'Serial number' is a consecutive number for clearly identifying an article.

SGTIN resembles the widely spread EAN/UCC *barcode*. However, the latter only provides the article class of the object, but not an individual number (Figure 9.47).

**Table 9.23** Encoding in SGTIN-96

| Header | Filter value | Partition | Company prefix | Item reference | Serial number |
|---|---|---|---|---|---|
| 8 bit<br>0011 0000 | 3 bit | 3 bit | 20–40 bit | 4–24 bit | 38 bit |

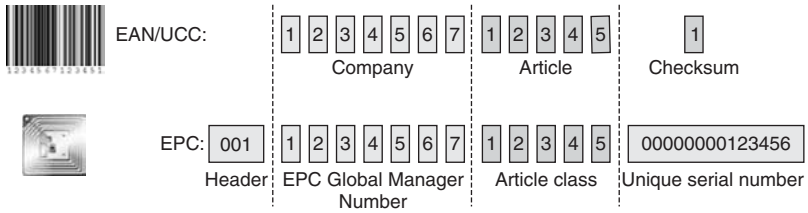


**Figure 9.47** Comparison of the encoding of common EAN/UCC barcodes and an SGTIN-encoded EPC

SGTIN-64 consisting of only 64 bits has a similar structure. As opposed to SGTIN-96, the length of the data fields 'Company prefix' and 'Item reference' is constant and there is no data field 'Partition'.

The encoding of the 'Company prefix' constitutes a singularity. It cannot be completely encoded as there are only 14 bits available. Instead of a genuine value, there is only an index value. A conversion table can be used to determine the genuine value of the 'Company prefix' where the index simply provides the number of the line in the table. Tables for the code conversion of index values in the 'Company prefix' can be downloaded from the website http://www.onsepc.com/. The following example shows the first entries of the conversion table:

| Index | Company prefix |
|---|---|
| 1, | 0037000 |
| 2, | 0047400 |
| 3, | 0080878 |
| 4, | 038004 |
| 5, | 0036000 |
| 6, | 0681131 |
| 7, | 0808736 |
| 8, | 0054000 |
| 9, | 0061143 |

#### *9.6.3.2.2 GIAI*

The *GIAI* (global individual asset identifier) generates an inventory of objects that are used within a logistics chain, e.g. vehicles or machines. There is a 64-bit version (GIAI-64) and a 96-bit version (GIAI-96).

The structure of GIAI is very similar to that of the previously described SGTIN. Data fields with the same name also have the same function. Instead of 'Company prefix" and 'Item reference', GIAI has an individual inventory number, the 'individual asset reference' which is up to 62 bits long.

**Table 9.24** Encoding scheme of SGTIN-64

| Header | Filter value | Company prefix index | Item reference | Serial number |
|---|---|---|---|---|
| 2 bit | 3 bit | 14 bit | 20 bit | 25 bit |

**Table 9.25** Encoding scheme of GIAI-64

| Header | Filter value | Company prefix index | Individual asset reference |
|---|---|---|---|
| 8 bit<br>0000 1011 | 3 bit | 14 bit | 39 bit |

**Table 9.26** Encoding scheme of GIAI-96

| Header | Filter value | Partition | Company prefix | Individual asset reference |
|---|---|---|---|---|
| 8 bit<br>0011 0100 | 3 bit | 3 bit | 20–40 bit | 62–42 bit |

#### 9.6.3.3 Transponder Classes

The transponders of EPCglobal Network are classified according to capacity. There are the following classes:

| | |
|---|---|
| Class 0 | Passive read-only transponder with 64-bit or 96-bit EPC (only for frequency range 900 MHz) |
| Class 0+ | Passive transponders, once writable, but readable with Class 0 protocol |
| Class I | Passive transponders, once writable with 64-bit or 96-bit EPC. Specified for frequency range 869–930 MHz as well as for 13.56 MHz |
| Class II | Passive transponders, once writable. The transponder has additional functions, such as encryption |
| Class III | Active transponders (i.e. battery-driven), rewritable |
| Class IV | These transponders are small radio devices and can communicate with each other. The transponders are rewritable |
| Class V | These transponders can communicate with each other, similarly to Class IV transponders. In addition, they can communicate with passive or active Class I, II and III transponders |
| Gen 2 | Passive transponders, once writable. It has a memory of at least 224 bits consisting of 96 bits of EPC data, 32 bits data for error-correcting and a data range for the user. The transponder also has a kill command. In the long run, Gen 2 transponders will replace Class 0 and Class I transponders |

#### 9.6.3.4 Introduction into the EPC Network

As we have shown, EPC is only an identification number for an object moving through the supply chains of trading companies. All information about the object with the corresponding individual EPC is exclusively administered in the EPCglobal Network. Each company in the EPCglobal Network administers and controls the EPC data sets and object data of the EPCs hat it has issued. Access rights to object data are locally configured on the individual EPCIS and can be accessed only by trading partners with the corresponding privileges.

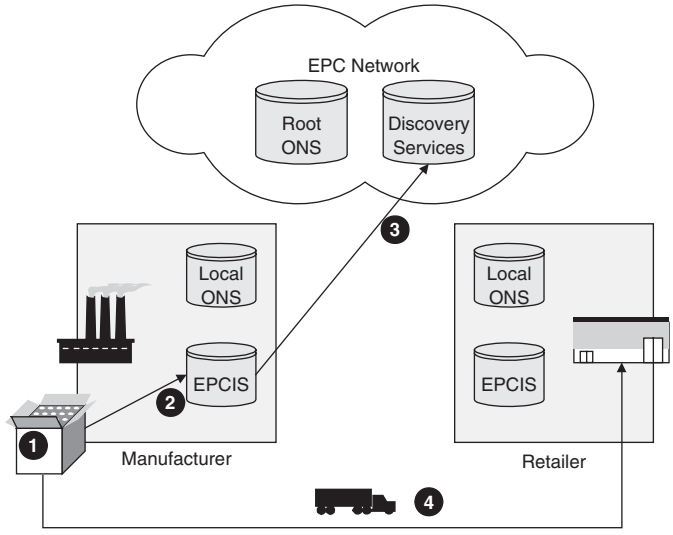


**Figure 9.48** The life cycle of an EPC starts with attaching the transponder(1) to the object

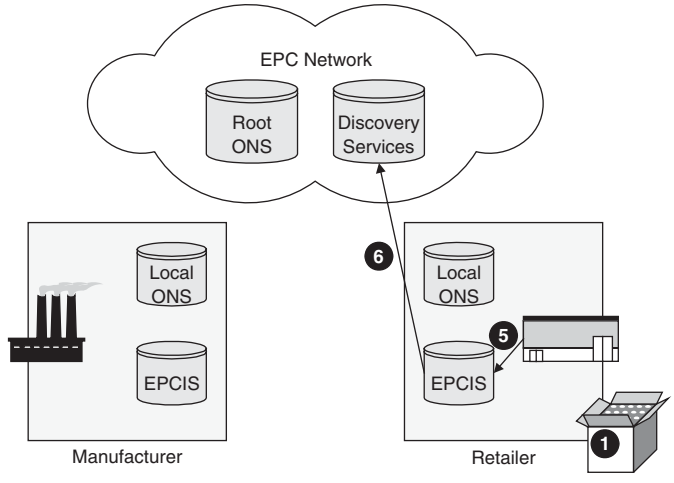


**Figure 9.49** If a trading partner receives a product, an 'acknowledgment' will be stored in its EPCIS

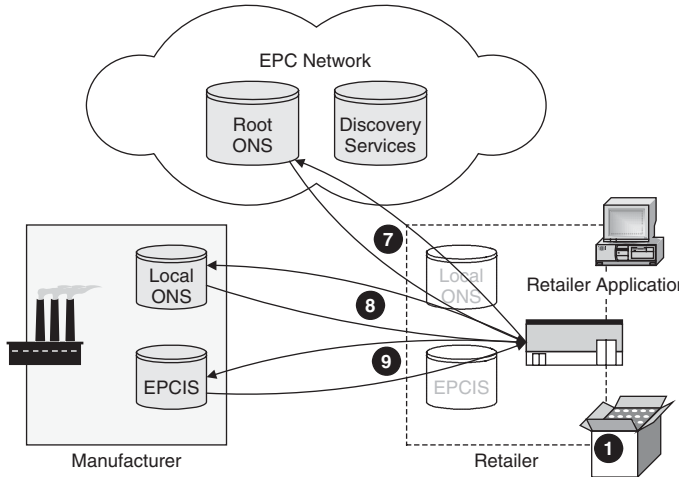


**Figure 9.50** Requesting product data of an EPC from the manufacturer's EPCIS

Figures 9.48–9.50 constitute a brief introduction to the EPCglobal Network and illustrate the path of an object through the supply chain of two trading partners.

The life cycle of an EPC starts with the manufacturer of a product attaching the transponder(1) to this product (McLaughlin, 2004). All data assigned to the product, such as production date or date of expiration, are stored in the manufacturer's EPCIS (2). EPCIS registers the entries with EPC Discovery Services in order to find the information in EPCglobal Network (3). Our product is finally shipped (4) to a retailer.

At the retailer's goods-in point, the corresponding data, such as date of receipt, are stored in the retailer's EPCIS (5) and finally registered by EPCIS with EPC Discovery Services (6).

In order to get object-related data of the received product via EPCglobal Network, the retailer needs the IP address of the manufacturer's EPCIS. To retrieve this address, the retailer at first needs the company prefix of the EPC attached to the product (1); the prefix will be sent on to the Root ONS of the EPCglobal network (7). The Root ONS now provides the Internet address of the manufacturer's local ONS; the item reference of the read-out EPC is sent to this address in order to receive the Internet address of the manufacturer's EPCIS. By requesting the EPCIS with the item reference and serial number of the EPC, the retailer can now get all relevant data for the received product.

A more comprehensive introduction to the internal processes of the EPCglobal Network is provided in Glover (2006).

# 10

# The Architecture of Electronic Data Carriers

Before we describe the functionality of the data carriers used in RFID systems we must first differentiate between two fundamental operating principles: there are *electronic data carriers* based upon integrated circuits (*microchips*) and data carriers that exploit physical effects for data storage. Both 1-bit transponders and surface wave components belong to the latter category.

Electronic data carriers are further subdivided into data carriers with a pure memory function and those that incorporate a programmable microprocessor.

This chapter deals exclusively with the functionality of electronic data carriers. The simple functionality of physical data carriers has already been described in Chapter 3.

## 10.1 Transponder with Memory Function

Transponders with a memory function range from the simple *read-only transponder* to the *high-end transponder* with intelligent cryptological functions (Figure 10.2).

Transponders with a memory function contain RAM, ROM, EEPROM or FRAM and an *RF interface* to provide the *power supply* and permit communication with the reader. The main distinguishing characteristic of this family of transponders is the realisation of address and security logic on the chip using a *state machine*.

### *10.1.1 RF Interface*

The RF interface forms the interface between the analogue, high-frequency transmission channel from the reader to the transponder and the digital circuitry of the transponder. The RF interface therefore performs the functions of a classical modem (modulator–demodulator) used for analogue data transmission via telephone lines.

The modulated RF signal from the reader is reconstructed in the RF interface by *demodulation* to create a digital serial data stream for reprocessing in the address and security logic. A clock-pulse generation circuit generates the system clock for the data carrier from the carrier frequency of the RF field.

The RF interface incorporates a *load modulator* or *backscatter modulator* (or an alternative procedure, e.g. frequency divider), controlled by the digital data being transmitted, to return data to the reader (Figure 10.3).

*RFID Handbook: Fundamentals and Applications in Contactless Smart Cards, Radio Frequency Identification and Near-Field Communication, Third Edition.* Klaus Finkenzeller
© 2010 John Wiley & Sons, Ltd

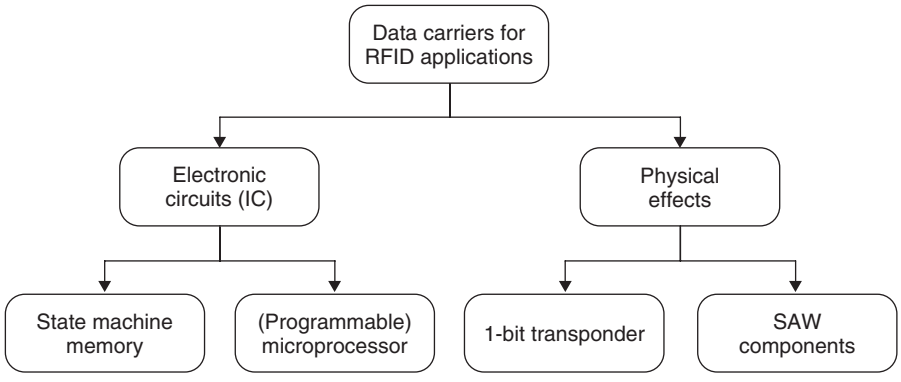


**Figure 10.1** Overview of the different operating principles used in RFID data carriers

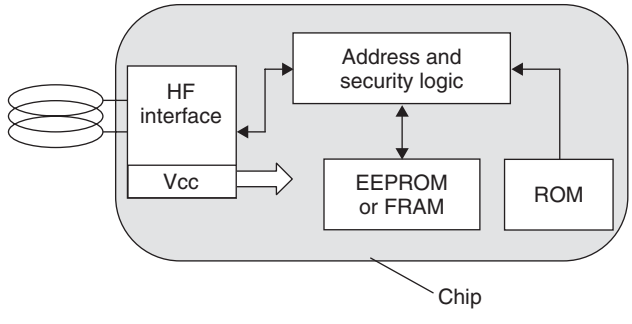


**Figure 10.2** Block diagram of an RFID data carrier with a memory function

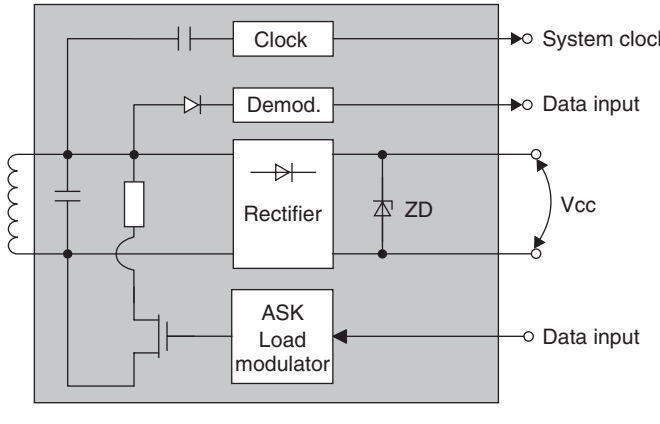


**Figure 10.3** Block diagram of the RF interface of an inductively coupled transponder with a load modulator

*Passive transponders*, i.e. transponders that do not have their own power supply, are supplied with energy via the RF field of the reader. To achieve this, the RF interface draws current from the transponder antenna, which is rectified and supplied to the chip as a regulated supply voltage.

#### 10.1.1.1 Example Circuit – Load Modulation with Subcarrier

The principal basic circuit of a load modulator is shown in Figure 10.4. This generates an ohmic load modulation using an ASK or FSK modulated *subcarrier*. The frequency of the subcarrier and the baud rates are in accordance with the specifications of the standard ISO 15693 (vicinity-coupling smart cards).

The high-frequency input voltage $u_2$ of the data carrier (transponder chip) serves as the time basis of the RF interface and is passed to the input of a binary divider. The frequencies specified in the standard for the subcarrier and the baud rate can be derived from the single binary division of the 13.56 MHz input signal.

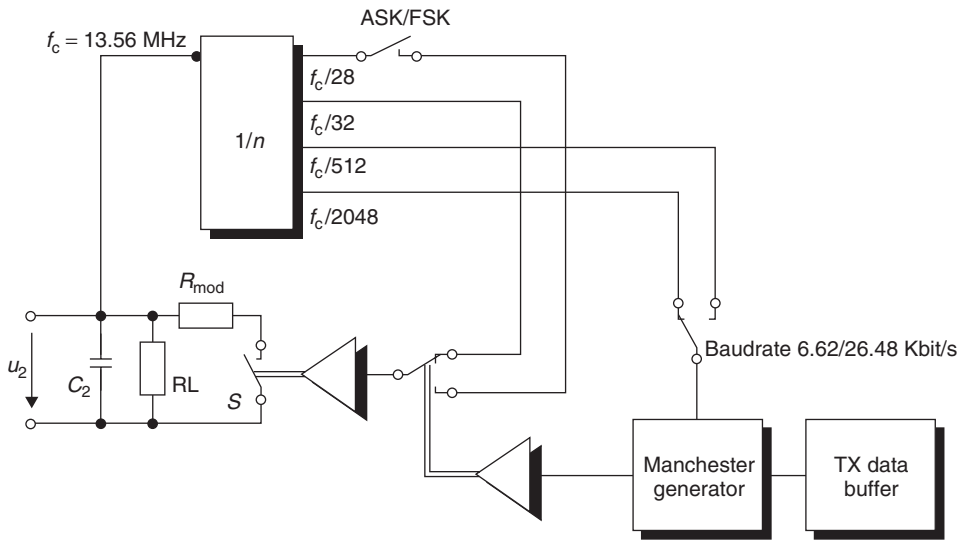


**Figure 10.4** Generation of a load modulation with modulated subcarrier: the subcarrier frequency is generated by a binary division of the carrier frequency of the RFID system. The subcarrier signal itself is initially ASK or FSK modulated (switch position ASK/FSK) by the Manchester coded data stream, while the modulation resistor in the transponder is finally switched on and off in time with the modulated subcarrier signal

**Table 10.1** The clock frequencies required in the RF interface are generated by the binary division of the 13.56 MHz carrier signal

| Splitter $N$ | Frequency (kHz) | Use |
|---|---|---|
| 1/28 | 485 | $\phi_2$ of the FSK subcarrier |
| 1/32 | 423 | $\phi_1$ of the FSK subcarrier, plus ASK subcarrier |
| 1/512 | 26.48 | Bit clock signal for high baud rate |
| 1/2048 | 6.62 | Bit clock signal for low baud rate |

The serial data to be transmitted is first transferred to a Manchester generator. This allows the baud rate of the baseband signal to be adjusted between two values. The Manchester coded baseband signal is now used to switch between the two subcarrier frequencies $f_1$ and $f_2$ using the '1' and '0' levels of the signal, in order to generate an FSK modulated subcarrier signal. If the clock signal $f_2$ is interrupted, this results in an ASK modulated subcarrier signal, which means that it is very simple to switch between ASK and FSK modulation. The modulated subcarrier signal is now transferred to switch $S$, so that the *modulation resistor* of the load modulator can be switched on and off in time with the subcarrier frequency.

#### 10.1.1.2 Example Circuit – RF Interface for ISO 14443 Transponder

The circuit in Figure 10.5 provides a further example of the layout of an RF interface. This was originally a simulator for contactless smart cards in accordance with ISO 14443, which can be used to simulate the data transmission from the smart card to a reader by load modulation. The circuit was taken from a proposal by Motorola for a contactless smart card in ISO 10373-6 (Baddeley and Ruiz, 1998).

A complete layout is available for the duplication of this test card (see Section 14.4.1). The circuit is built upon an FR4 printed circuit board. The transponder coil is realised in the form of a large-area conductor loop with four windings of a printed conductor. The dimensions of the transponder coil correspond with the ratios in a real smart card.

The *transponder resonant circuit* of the test card is made up of the transponder coil $L_1$ and the trimming capacitor $CV_1$. The resonant frequency of the transponder resonant circuit should be tuned to the transmission frequency of the reader, 13.56 MHz (compare Section 4.1.11.2). The RF voltage present at the transponder resonant circuit is rectified in the bridge rectifier $D_1$–$D_4$ and maintained at approximately 3 V by the Zener diode $D_6$ for the power supply to the test card.

The binary divider $U_1$ derives the required system clocks of 847.5 kHz (subcarrier, divider 1/16) and 105.93 kHz (baud rate, divider 1/128) from the carrier frequency 13.56 MHz.

The circuit made up of $U_2$ and $U_3$ is used for the ASK or BPSK modulation of the subcarrier signal (847.5 kHz) with the Manchester or NRZ coded data stream (jumper 1–4). In addition to the simple infinite bit sequences 1111 and 1010, the supply of an external data stream (jumper 10) is also possible. The test smart card thus supports both procedures for data transfer between smart card and reader defined in ISO 14443-2.

Either a capacitive ($C_4, C_5$) or an ohmic ($R_9$) load modulation can be selected. The 'open collector' driver $U_4$ serves as the output stage ('switch') for the load modulator.

The *demodulation* of a data stream transmitted from the reader is not provided in this circuit. However, a very simple extension of the circuit (Figure 10.6) facilitates the demodulation of at least a 100% ASK modulated signal. This requires only an additional diode to rectify the RF voltage of the transponder resonant circuit. The time constant $\tau = R \cdot C$ should be dimensioned such that the carrier frequency (13.56 MHz) is still effectively filtered out, but the modulation pulse ($t_{\text{pulse}} = 3\,\mu\text{s}$ in accordance with ISO 14443-2) is retained as far as is possible.

### *10.1.2 Address and Security Logic*

The *address and security logic* forms the heart of the data carrier and controls all processes on the chip.

The *power-on logic* ensures that the data carrier takes on a defined state as soon as it receives an adequate power supply upon entering the RF field of a reader. Special I/O registers perform the data exchange with the reader. An optional *cryptological unit* is required for authentication, data encryption and key administration.

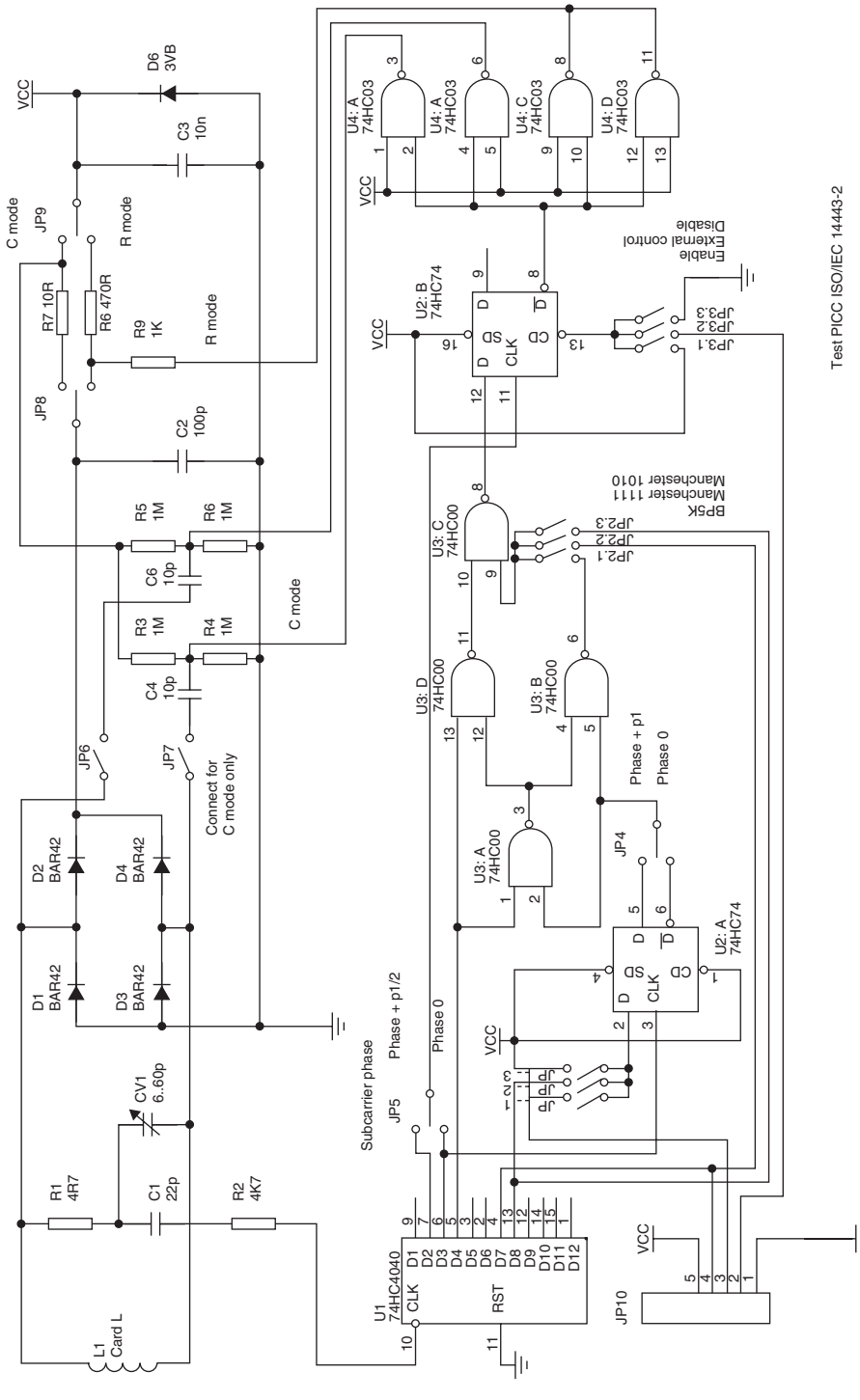


**Figure 10.5** Example circuit of an RF interface in accordance with ISO 14443

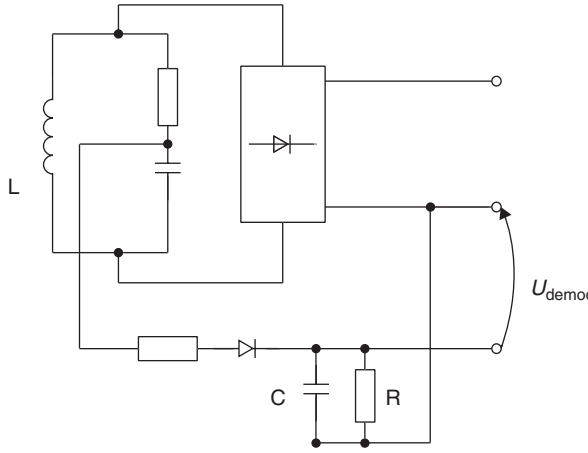


**Figure 10.6** A 100 % ASK modulation can be simply demodulated by an additional diode

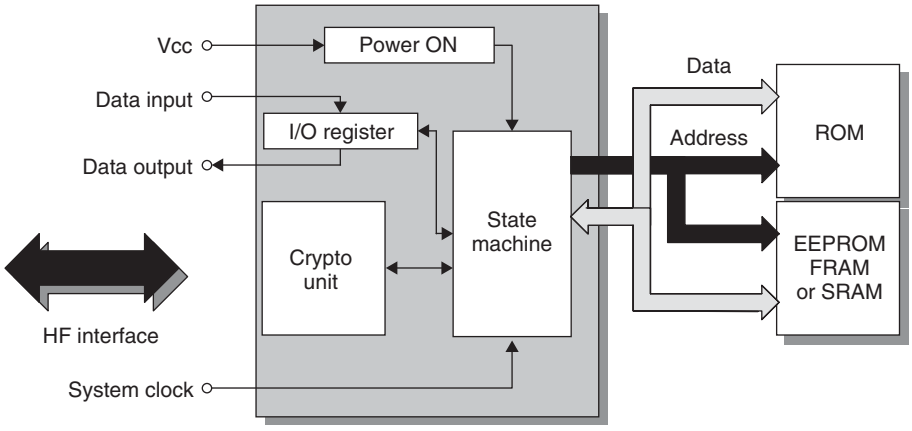


**Figure 10.7** Block diagram of address and security logic module

The data memory, which comprises a ROM for permanent data such as serial numbers, and EEPROM or FRAM is connected to the address and security logic via the address and data bus inside the chip.

The *system clock* required for sequence control and system synchronisation is derived from the RF field by the RF interface and supplied to the address and security logic module. The state-dependent control of all procedures is performed by a state machine (hard-wired software). The complexity that can be achieved using state machines comfortably equals the performance of microprocessors (high-end transponders). However the 'programme sequence' of these machines is determined by the chip design. The functionality can only be changed or modified by modifying the chip design and this type of arrangement is thus only of interest for very large production runs.

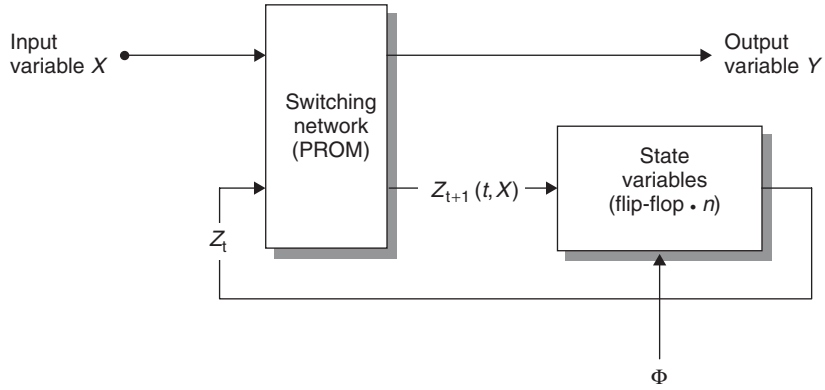


**Figure 10.8** Block diagram of a state machine, consisting of the state memory and a back-coupled switching network

#### 10.1.2.1 State Machine

A *state machine* (also switching device, Mealy machine) is an arrangement used for executing logic operations, which also has the capability of storing variable states (Figure 10.8). The output variable $Y$ depends upon both the input variable $X$ and what has gone before, which is represented by the switching state of flip-flops (Tietze and Schenk, 1985).

The state machine therefore passes through different states, which can be clearly represented in a *state diagram* (Figure 10.9). Each possible state $S_Z$ of the system is represented by a circle. The transition from this state into another is represented by an arrow. The arrow caption indicates the conditions that the transition takes place under. An arrow with no caption indicates an unspecified transition (power on $\rightarrow S_1$). The current new state $S_Z(t+1)$ is determined primarily by the old state $S_Z(t)$ and, secondly, by the input variable $x_i$.

The order in which the states occur may be influenced by the input variable $x$. If the system is in state $S_Z$ and the transition conditions that could cause it to leave this state are not fulfilled, the system remains in this state.

A switching network performs the required classification. If the state variable $Z(t)$ and the input variable are fed into its inputs, then the new state $Z(t+1)$ will occur at the output (Figure 10.8). When the next timing signal is received this state is transferred to the output of (transition triggered) flip-flops and thus becomes the new system state $S(t+1)$ of the state machine.

### *10.1.3 Memory Architecture*

#### 10.1.3.1 Read-Only Transponder

This type of transponder represents the low-end, low-cost segment of the range of RFID data carriers. As soon as a *read-only transponder* enters the interrogation zone of a reader it begins to continuously transmit its own identification number (Figure 10.10). This identification number is normally a simple *serial number* of a few bytes with a check digit attached. Normally, the chip manufacturer guarantees that each serial number is only used once. More complex codes are also possible for special functions.

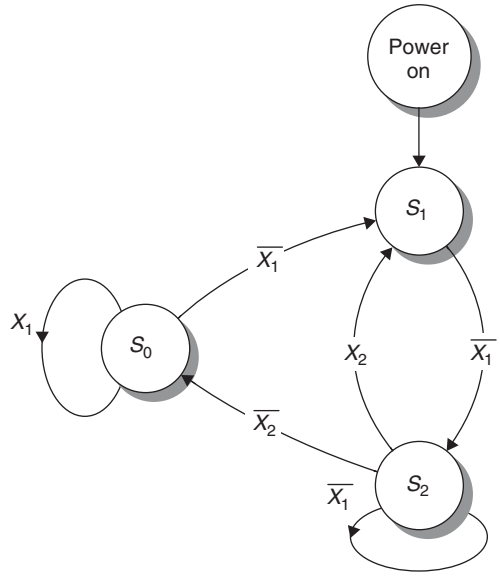


**Figure 10.9** Example of a simple state diagram to describe a state machine

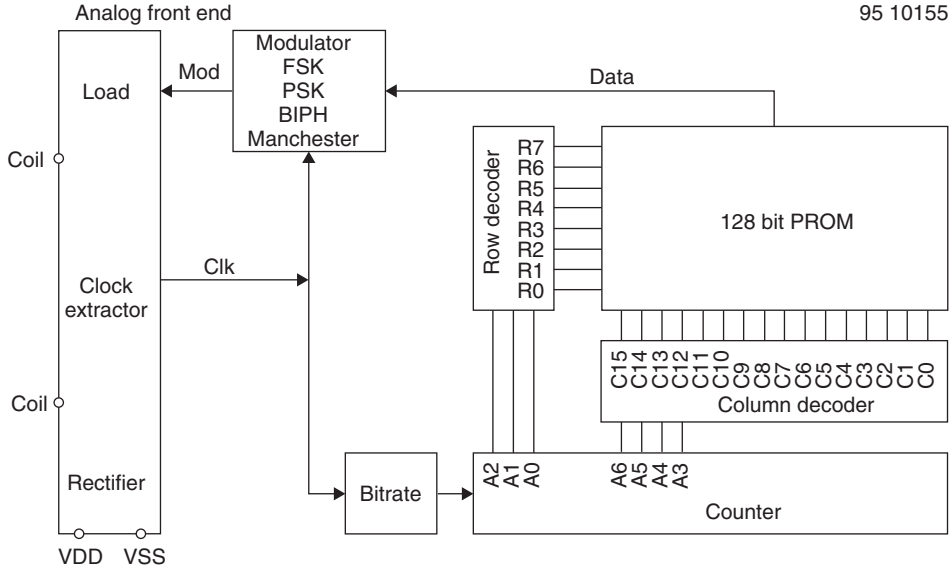


**Figure 10.10** Block diagram of a read-only transponder. When the transponder enters the interrogation zone of a reader a counter begins to interrogate all addresses of the internal memory (PROM) sequentially. The data output of the memory is connected to a load modulator which is set to the baseband code of the binary code (modulator). In this manner the entire content of the memory (128-bit serial number) can be emitted cyclically as a serial data stream (reproduced by permission of TEMIC Semiconductor GmbH, Heilbronn)

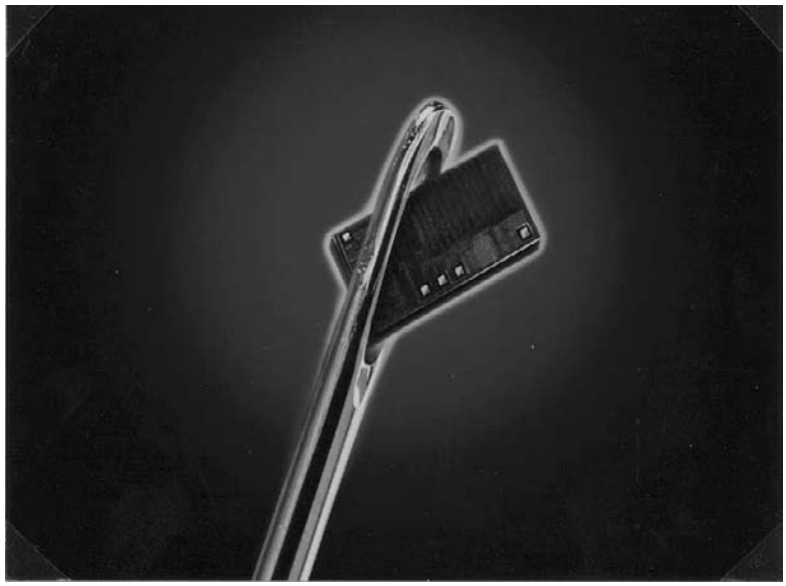

**Figure 10.11** Size comparison: low-cost transponder chip in the eye of a needle (reproduced by permission of Philips Electronics N.V)

The transponder's unique identification number is incorporated into the transponder during chip manufacture. The user cannot alter this serial number, nor any data on the chip.

Communication with the reader is unidirectional, with the transponder sending its identification number to the reader continuously. Data transmission from the reader to the transponder is not possible. However, because of the simple layout of the data carrier and reader, read-only transponders can be manufactured extremely cheaply.

Read-only transponders are used in price-sensitive applications that do not require the option of storing data in the transponder. The classic fields of application are therefore animal identification, access control and industrial automation with central data management.

#### 10.1.3.2 Writable Transponder

Transponders that can be written with data by the reader are available with memory sizes ranging from just 1 byte ('pigeon transponder') to 64 Kbytes (microwave transponders with SRAM).

Write and read access to the transponder is often in blocks. Where this is the case, a block is formed by assembling a predefined number of bytes, which can then be read or written as a single unit. To change the data content of an individual block, the entire block must first be read from the transponder, after which the same block, including the modified bytes, can be written back to the transponder.

Current systems use block sizes of 16 bits, 4 bytes or 16 bytes. The *block structure* of the memory facilitates simple addressing in the chip and by the reader.

#### 10.1.3.3 Transponder with Cryptological Function

If a writable transponder is not protected in some way, any reader that is part of the same RFID system can read from it, or write to it. This is not always desirable, because sensitive applications

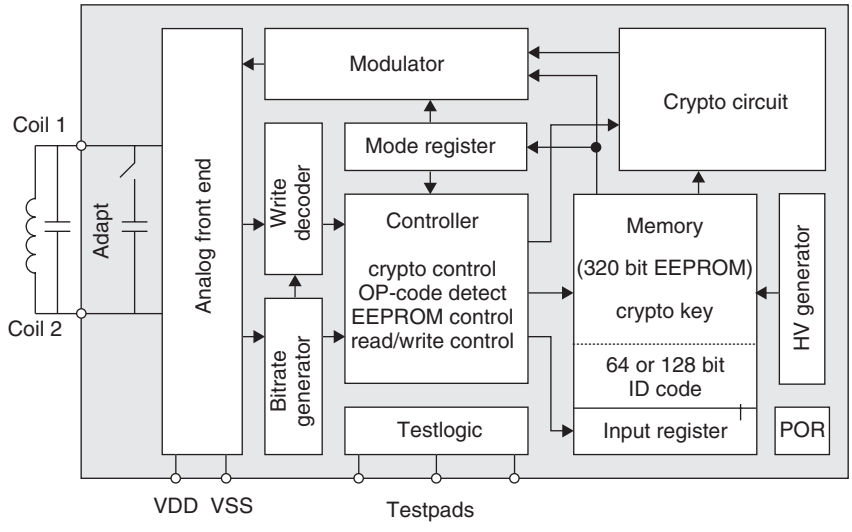


**Figure 10.12** Block diagram of a writable transponder with a cryptological function to perform authentication between transponder and reader (reproduced by permission of TEMIC Semiconductor GmbH, Heilbronn)

may be impaired by unauthorised reading or writing of data in the transponder. Two examples of such applications are the contactless cards used as tickets in the public transport system and transponders in vehicle keys for electronic immobilisation systems.

There are various procedures for preventing unauthorised access to a transponder. One of the simplest mechanisms is read and write protection by checking a *password*. In this procedure, the card compares the transmitted *password* with a stored reference password and permits access to the data memory if the passwords correspond.

However, if mutual authorisation is to be sought, or it is necessary to check that both components belong to the same application, then authentication procedures are used. Fundamentally, an *authentication procedure* always involves a comparison of two secret *keys*, which are not transmitted via the interface. (A detailed description of such procedures can be found in Chapter 8). Cryptological authentication is usually associated with the encryption of the data stream to be transmitted (Figure 10.12). This provides an effective protection against attempts to eavesdrop on the data transmission by monitoring the wireless transponder interface using a radio receiver.

In addition to the memory area allocated to application data, transponders with cryptological functions always have an additional memory area for the storage of the secret key and a *configuration register* (*access register*, Acc) for selectively write protecting selected address areas. The secret key is written to the *key memory* by the manufacturer before the transponder is supplied to the user. For security reasons, the key memory can never be read.

#### *10.1.3.3.1 Hierarchical Key Concept*

Some systems provide the option of storing two separate keys – key A and key B – that give different access rights. The authentication between transponder and reader may take place using key A or key B. The option of allocating different *access rights* (Acc) to the two keys may therefore be exploited in order to define hierarchical security levels in an application.

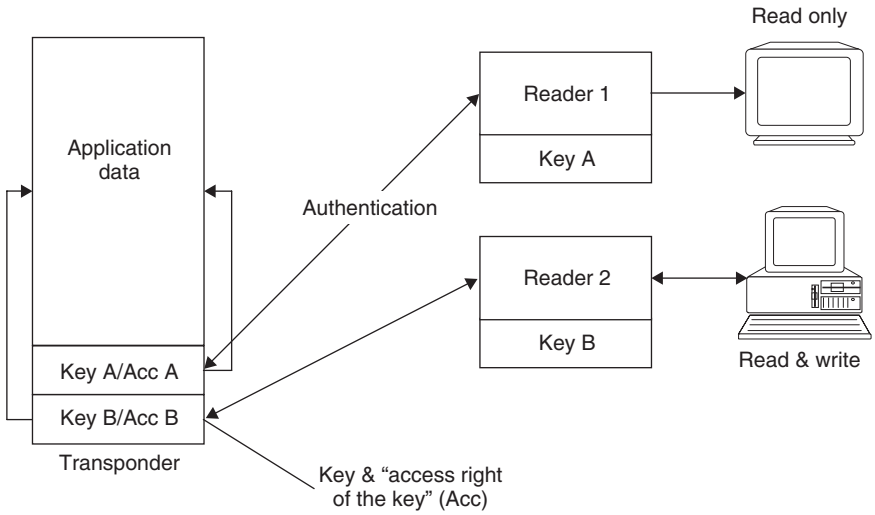


**Figure 10.13** A transponder with two key memories facilitates the hierarchical allocation of access rights, in connection with the authentication keys used

Figure 10.13 illustrates this principle for clarification. The transponder incorporates two key memories, which are initialised by the two keys A and B. The access rights that the readers are allocated after successful authentication depend upon the setting that has been selected in the transponder (access register) for the key that has been used.

Reader 1 is only in possession of key A. After successful authentication, the selected settings in the access register (Acc) only permit it to read from the transponder memory. Reader 2, on the other hand, is in possession of key B. After successful authentication using key B, the settings selected in the access register (Acc) permit it to write to the transponder memory as well as reading from it.

#### *10.1.3.3.2 Sample Application – Hierarchical Key*

Let us now consider the system of travel passes used by a public transport network as an example of the practical use of *hierarchical keys*. We can differentiate between two groups of readers: the 'devaluers' for fare payments and the 'revaluers' which revalue the contactless smart cards.

The access rights to the transponder's two access registers A and B are configured such that, after successful authentication using key A, the system only permits the deduction of monetary amounts (the devaluation of a counter in the transponder). Only after authentication with key B may monetary amounts be added (the revaluation of the same counter).

In order to protect against attempted fraud, the readers in vehicles or subway entrances, i.e. devaluers, are only provided with key A. This means that a transponder can never be revalued using a devaluer, not even if the software of a stolen devaluer is manipulated. The transponder itself refuses to add to the internal counter unless the transaction has been authenticated by the correct key.

The high-security key B is only loaded into selected secure readers that are protected against theft. The transponder can only be revalued using these readers.

#### 10.1.3.4 Segmented Memory

Transponders can also be protected from access by readers that belong to other applications using authentication procedures, as we described in a previous chapter. In transponders with large memory capacities, it is possible to divide the entire memory into small units called segments, and protect each of these from unauthorised access with a separate key. A *segmented transponder* such as this permits data from different applications to be stored completely separately.

Access to an individual segment can only be gained after successful authentication with the appropriate key. Therefore, a reader belonging to one application can only gain access to its 'own' segment if it only knows the *application's own key*.

The majority of segmented memory systems use fixed segment sizes. In these systems, the storage space within a segment cannot be altered by the user. A fixed segment size has the advantage that it is very simple and cheap to realise upon the transponder's microchip.

However, it is very rare for the storage space required by an application to correspond to the segment size of the transponder. In small applications, valuable storage space on the transponder is wasted because the segments are only partially used. Very large applications, on the other hand, need to be distributed across several segments, which means that the application-specific key must be stored in each of the occupied segments. This multiple storage of an identical key also wastes valuable storage space.

A much better use of space is achieved by the use of variable length segments (Figure 10.15). In this approach, the memory allocated to a segment can be matched to the requirements of the application using the memory area. Because of the difficulty in realising *variable segmentation*, this variant is rare in transponders with state machines.

Figure 10.16 illustrates the memory configuration of a transponder with fixed segmentation. The available memory, totalling 128 bytes, is divided into four segments, known as 'pages'. Each of the four segments can be protected against unauthorised reading or writing by its own password. The access register of this transponder ('OTP write protection') consists of an additional memory area of 16 bits per segment. Deleting a single bit from the access register permanently protects 16 bits of the application memory against overwriting.

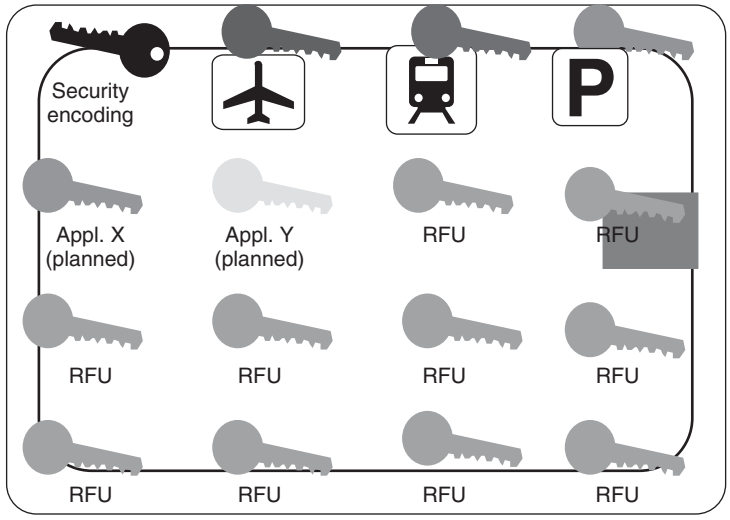


**Figure 10.14** Several applications on one transponder – each protected by its own secret key

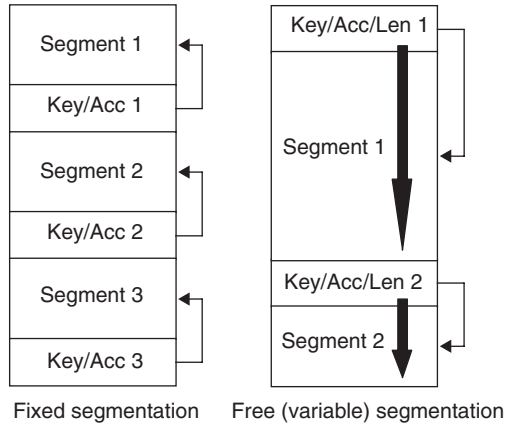


**Figure 10.15** Differentiation between fixed segmentation and free segmentation

#### 10.1.3.5 MIFARE® Application Directory

The memory of a *MIFARE® transponder* is divided into 16 independent segments, known as sectors. Each sector is protected against unauthorised access by two different keys (hierarchical structure). Different access rights can be allocated to each of the two keys in its own access register (configuration). Thus, 16 independent *applications* that are protected from each other by secret keys can be loaded onto the transponder (Figure 10.17). None of the applications can be read without the secret key, not even for checking or identification. So it is not even possible to determine what applications are stored on the transponder.

Let us now assume that the city of Munich has decided to issue a contactless City-Card, which citizens can use to avail themselves of city services, and which occupies only a small part of the available memory on the card. The remaining memory units on the card could be used by other service providers for their own applications, such as local transport tickets, car rental, filling station cards, parking passes, bonus cards for restaurants and supermarket chains, and many others. However, we cannot find out which of the many possible applications are currently available on the card, because each reader belonging to an application only has access to its own sector, for which it also has the correct key.

To get around this problem, the author, in conjunction with Philips Semiconductors Gratkorn (was Mikron), has developed an *application directory* for the MIFARE® smart card. Figures 10.18 and 10.19 illustrate the data structure of this directory, the *MAD* (MIFARE® application directory).

Blocks 1 and 2 of sector 0 are reserved for the MAD, leaving 32 bytes available for the application directory. Two bytes of each make up a pointer, ID1 to ID Fh, to one of the remaining 15 sectors. Reading the content of the pointer yields 2 bytes, the *function cluster* and the *application code*, which can be used to look the application up in an external database. Even if the application we are looking for is not registered in the available database, we can still gain an approximate classification from the function cluster, for example ‘airlines’, ‘railway services’, ‘bus services’, ‘city card services’, ‘ski ticketing’, ‘car parking’, etc.

Each application is allocated a unique identification number, made up of the function cluster code and application code. It is possible to request an identification number from the developer of MIFARE® technology, Philips Semiconductors Gratkorn (Mikron) at Graz.

If a function cluster is set at 00 h, then this is an *administration code* for the management of free or reserved sectors.

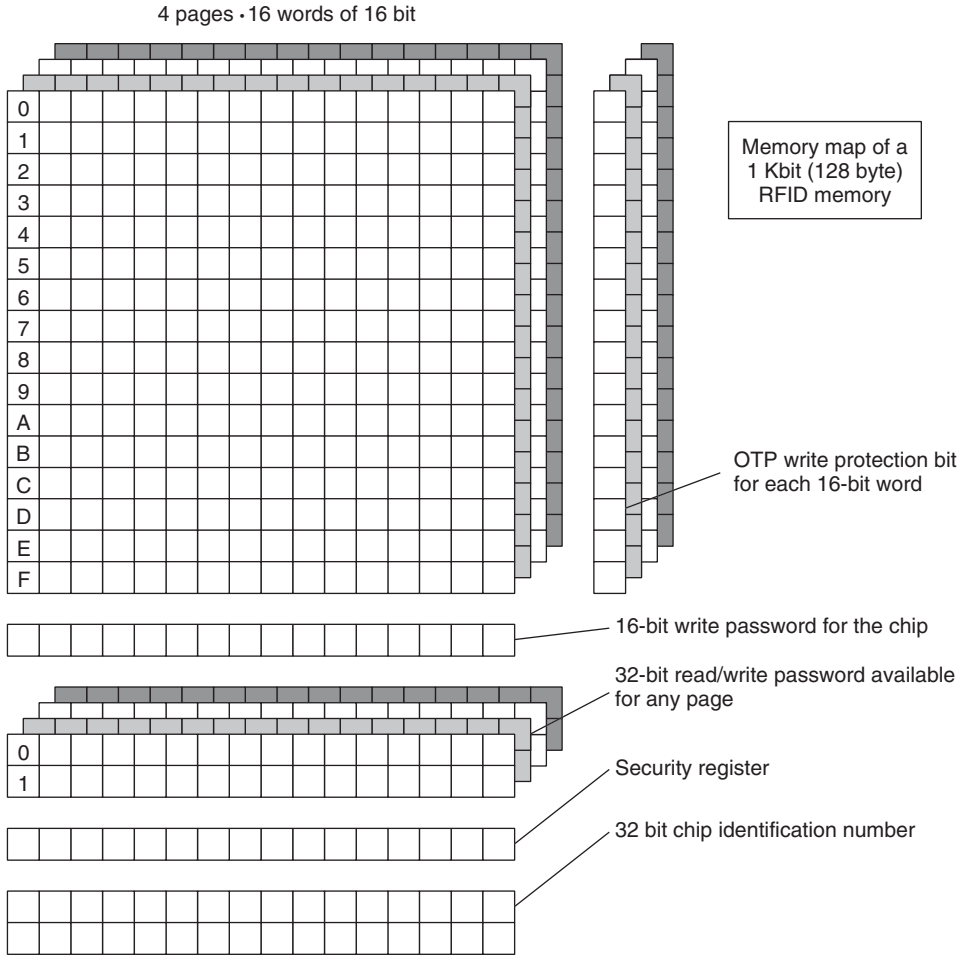


**Figure 10.16** Example of a transponder with fixed segmentation of the memory (IDESCO MICROLOG®) The four 'pages' can be protected against unauthorised reading or writing using different passwords (IDESCO, n.d)

Sector 0 itself does not require an ID pointer, because the MAD itself is stored in sector 0. The 2 bytes that this leaves free are used to store an 8-bit CRC, which is used to check the MAD structure for errors, and an info byte. A note can be recorded in the lowest 4 bits of the info byte, giving the sector ID of the card publisher. In our example, this would be the sector ID of one of the sectors in which the data belonging to the city of Munich is stored. This allows the reader to determine the card publisher, even if more than one application is recorded on the smart card.

Another special feature is MAD's key management system. While key A, which is required for reading the MAD, is published, key B, which is required for recording further applications, is managed by the card publisher. This means that joint use of the card by a secondary service provider is only possible after a joint use contract has been concluded and the appropriate key issued.

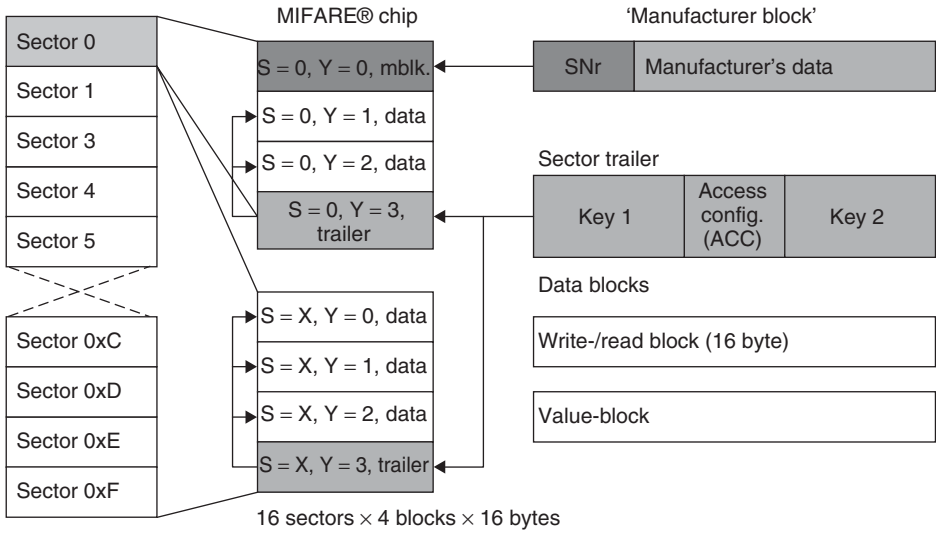


**Figure 10.17** Memory configuration of a MIFARE® data carrier. The entire memory is divided into 16 independent sectors. Thus a maximum of separate 16 applications can be loaded onto a MIFARE® card

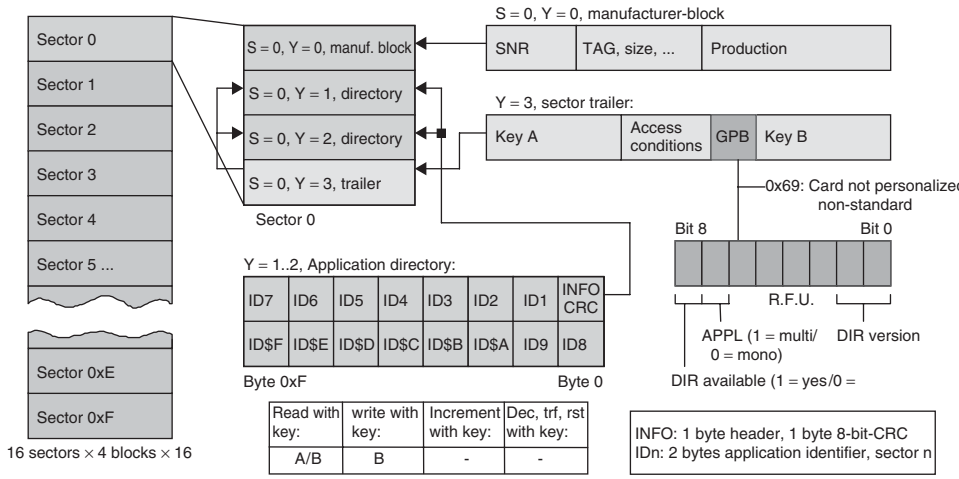


**Figure 10.18** The data structure of the MIFARE® application directory consists of an arrangement of 15 pointers (ID1 to ID Fh), which point to the subsequent sectors

### 10.1.3.6 Dual Port EEPROM

EEPROM modules with a serial *I²C (IIC) bus* interface established themselves years ago, particularly in consumer electronics. I²C bus is the abbreviation for Inter IC bus, because originally it was developed for the connection of microprocessors and other ICs on a common printed circuit board.

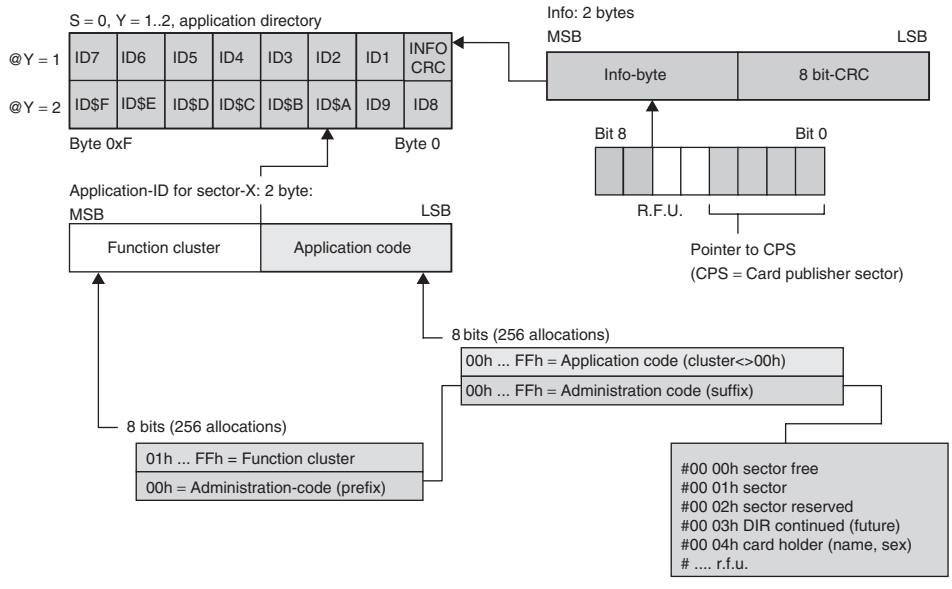


**Figure 10.19** Data structure of the MIFARE® application directory: it is possible to find out what applications are located in each sector from the contents of the 15 pointers (ID Ah–ID Fh)

The $I^2C$ bus is a serial bus and requires only two bidirectional lines, SDA (serial data) and SCL (serial clock). A serial EEPROM can be read or written by the transmission of defined commands via the two lines of the $I^2C$ bus.

Some of these serial EEPROM modules now also have an RF interface and can thus be read or written either via the two SDA and SCL lines or via the contactless interface. The block diagram of such a *dual port EEPROM* (Atmel, 1998) is shown in Figure 10.20.

The EEPROM is accessed via two state machines ('RF control' and 'serial control') that are largely independent of each other. The additional arbitration logic prevents conflicts as a result of simultaneous access to the EEPROM via the RF and serial interfaces by simply blocking access to the other interface for the duration of a write or read operation.

The RF interface of the module is designed for inductive coupling in the frequency range of 125 kHz. If no supply voltage is available via the $V_{cc}$ pin of the module, then the dual port EEPROM can also be supplied with power entirely via the RF interface. The integral power management simply switches off parts of the circuit that are not required in pure contactless operation. The data transfer from the serial EEPROM to a contactless reader takes place by ohmic load modulation in the baseband. Commands from a reader are transferred to the dual port EEPROM by a simple ASK modulation (modulation index $m > 10\%$). See Figures 10.21 and 10.22 for the pin assignment and memory configuration.

The total memory space of 1 Kbyte (8 Kbit) available on the dual port EEPROM was divided into eight segments (blocks 0–7). Each of these eight blocks was subdivided into eight subsegments (pages 0–7), each of 16 bytes. An additional 16 bytes are available as an *access protection page*. The structure of the access protection page is shown in Figure 10.23. The access protection page permits different access rights to the eight blocks of the EEPROM to be set independently of each other for the $I^2C$ bus and the RF interface. However, read and write access to the access protection page itself is only possible via the $I^2C$ bus interface.

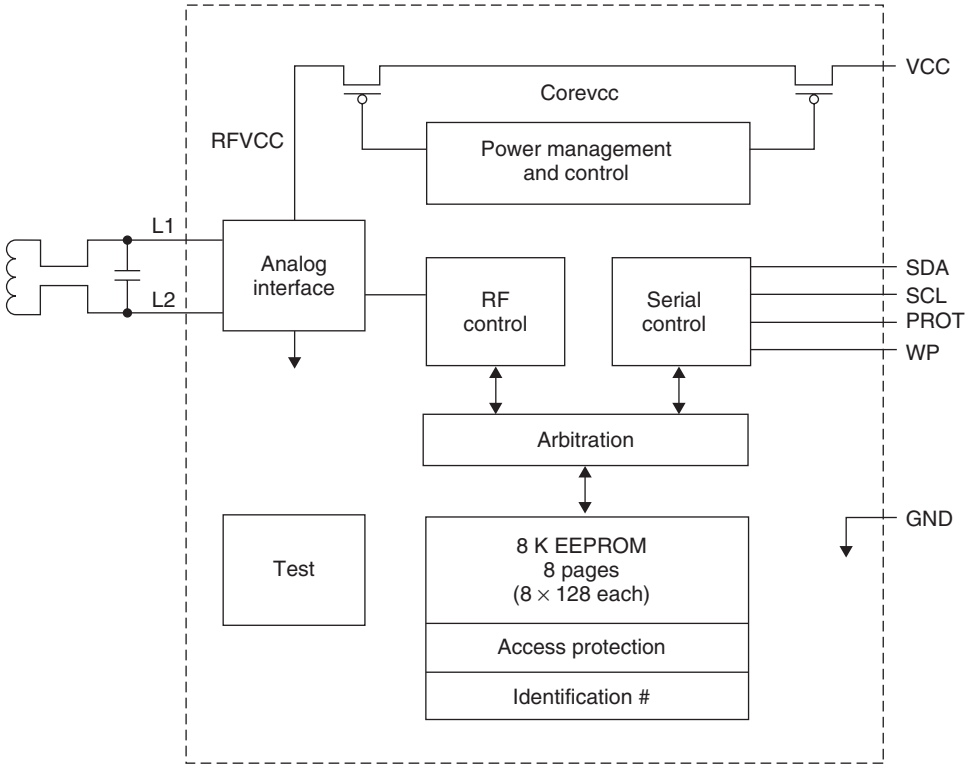


**Figure 10.20** Block diagram of a dual port EEPROM. The memory can be addressed either via the contactless RF interface or an IIC bus interface (reproduced by permission of Atmel Corporation, San Jose, USA)

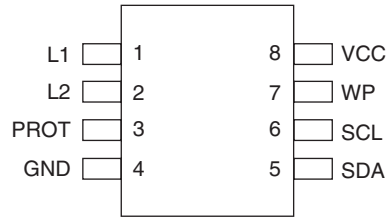


**Figure 10.21** Pin assignment of a dual port EEPROM. The transponder coil is contacted to pins $L_1$ and $L_2$. All other pins of the module are reserved for connection to the $I^2C$ bus and for the power supply in 'contact mode' (reproduced by permission of Atmel Corporation, San Jose, USA)

The access rights of the RF interface on memory block $Y$ are defined in the bits $RF_Y$ of the access protection page, e.g. $RF_7$ contains the access rights on block 7 (Table 10.2). In a similar manner, the access rights of the $I^2C$ bus interface are defined on a memory block $Y$ in the bit $PB_Y$ of the access protection page ($PB_5$ contains access rights on block 5).

Furthermore, block 0 permits the access rights of the individual 16 byte pages of the block to be set independently of each other. Bits WP7–WP0 of the access protection page serve this purpose.

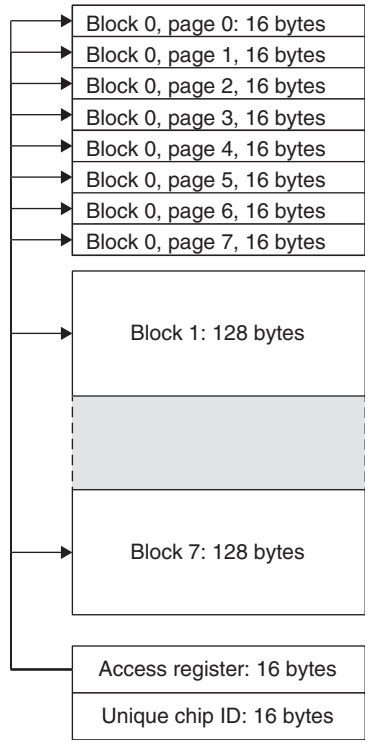


**Figure 10.22** Memory configuration of the AT24RF08. The available memory of 1 Kbyte is split into 16 segments (blocks 0–7) of 128 bytes each. An additional memory of 32 bytes contains the access protection page and the unique serial numbers. The access protection page permits different access rights to be set in the memory for the RF and $I^2C$ bus interface

A peculiarity is the tamper bit in the access protection page. This bit can be set only to '1' by the RF interface and only to '0' by the $I^2C$ bus interface. In this manner a previous write or read access of the EEPROM via the RF interface can be signalled to the master of the connected $I^2C$ bus.

## 10.2 Microprocessors

Transponders with *microprocessors* will become increasingly common in applications using contactless smart cards in the near future. Instead of the inflexible state machine, the transponder in these cards incorporates a microprocessor.

Industry-standard microprocessors, such as the familiar 8051 or 6805, are used as the microprocessor at the heart of the chip. In addition, some manufacturers offer simple mathematical coprocessors (cryptological unit) on the same chip, which permit the rapid performance of the calculations required for encryption procedures (Figure 10.24).

Contactless smart cards with microprocessors incorporate their own *operating system*, as has long been the case in contact-based cards. The tasks of the operating system in a contactless smart card are data transfer from and to the smart card, command sequence control, file management and the execution of cryptographic algorithms (e.g. encryption, authentication).

| bit 7 | bit 6 | bit 5 | bit 4 | bit 3 | bit 2 | bit 1 | bit 0 | |
|---|---|---|---|---|---|---|---|---|
| SB0 | | RF0 | | | | PB0 | | Addr 0 |
| SB1 | | RF1 | | | | PB1 | | Addr 1 |
| SB2 | | RF2 | | | | PB2 | | Addr 2 |
| SB3 | | RF3 | | | | PB3 | | Addr 3 |
| SB4 | | RF4 | | | | PB4 | | Addr 4 |
| SB5 | | RF5 | | | | PB5 | | Addr 5 |
| SB6 | | RF6 | | | | PB6 | | Addr 6 |
| SB7 | | RF7 | | | | PB7 | | Addr 7 |
| $SB_{AP}$ | | | | | | $PB_{AP}$ | | Addr 8 |
| WP7 | WP6 | WP5 | WP4 | WP3 | WP2 | WP1 | WP0 | Addr 9 |
| DE | DC | | | | | | Tamper | Addr A |
| Reserved | | | | | | | | Addr B |
| Reserved | | | | | | | | Addr C |
| Reserved | | | | | | | | Addr D |
| Reserved | | | | | | | | Addr E |
| Chip-revision | | | | | | | | Addr F |

**Figure 10.23** The access configuration matrix of the module AT24RF08 facilitates the independent setting of access rights to the blocks 0–7

**Table 10.2** Setting options for the access rights of the RF interface to individual memory blocks in the bits $RF_0$–$RF_7$ of the access protection page

| MSB | LSB | Access rights via RF interface |
|---|---|---|
| 0 | 0 | No access to EEPROM |
| 0 | 1 | No access to EEPROM |
| 1 | 0 | Read access to EEPROM only |
| 1 | 1 | No restrictions |

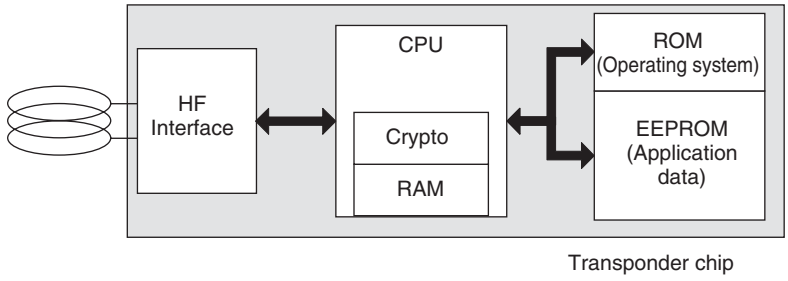


**Figure 10.24** Block diagram of a transponder with a microprocessor. The microprocessor contains a coprocessor (cryptological unit) for the rapid calculation of the cryptological algorithms required for authentication or data encryption

The programme modules are written in ROM code and are incorporated into the chip at the chip manufacturing stage by an additional exposure mask (mask programming).

The typical command processing sequence within a smart card operating system is as follows: commands sent from the reader to the contactless smart card are received by the smart card via the RF interface. Error recognition and correction mechanisms are performed by the I/O manager irrespective of higher-level procedures. An error-free command received by the secure messaging manager is decrypted or checked for integrity. After decryption the higher-level command interpreter attempts to decode the command. If this is not possible, then the return code manager is called, which generates the appropriate return code and sends it back to the reader via the I/O manager (Figure 10.25).

If a valid command is received, then the actual programme code associated with this application command is executed. If access to the application data in the EEPROM is necessary, this is performed exclusively by the file management system and the memory manager, which convert all symbolic addresses into the corresponding physical addresses of the memory area. The file manager also checks access conditions (authorisation) for the data in question.

A more detailed introduction to the procedures for the development of operating systems and smart card applications can be found in the book *The Smart Card Handbook* published by John Wiley & Sons (Rankl and Effing, 2010).

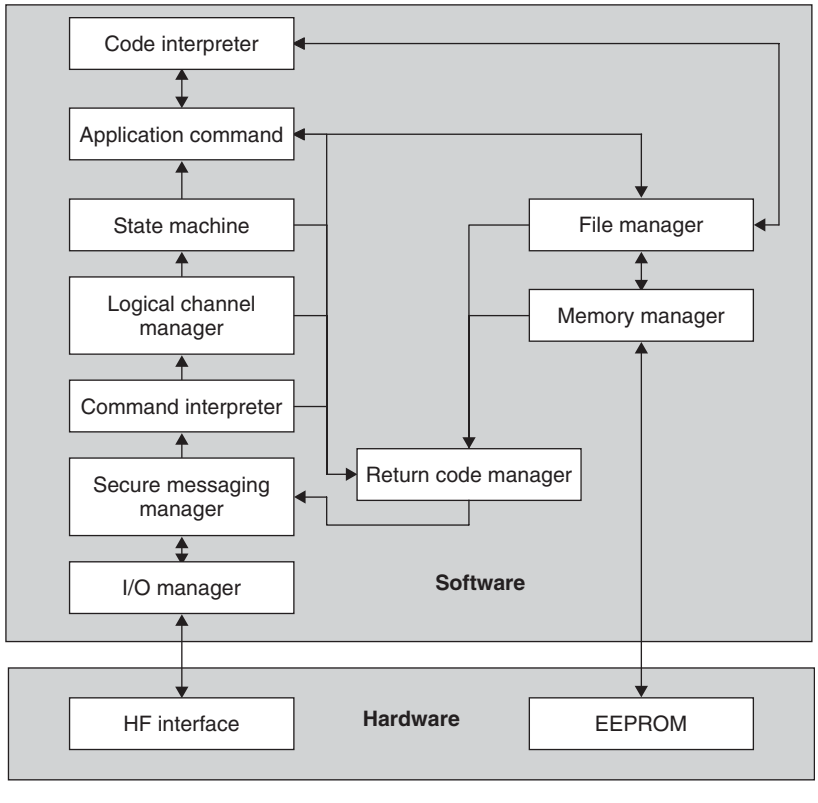


**Figure 10.25** Command processing sequence within a smart card operating system (Rankl and Effing, 1996)

### 10.2.1 Dual Interface Card

The traditional key markets for *contact smart cards* are *payment* applications (cash card, electronic purse) and *mobile telephones* (SIM card for GSM mobile telephone), applications that necessitate a high degree of security in the processing and transmission of data. The resulting necessity of being able to quickly and simply calculate complex *cryptographic* algorithms led to the development of powerful cryptographic *coprocessors* on the card chips.

Contactless smart cards, on the other hand, are traditionally used in applications that require a combination of user-friendliness (access control) and short *transaction times* (ticketing). The trend towards combining payment applications with typical contactless applications (cash card with ticketing function) finally led to the development of the *dual interface card*, in which both a contact and a contactless interface are available on one chip. A dual interface card can thus be addressed either via the contactless or the contact interface.

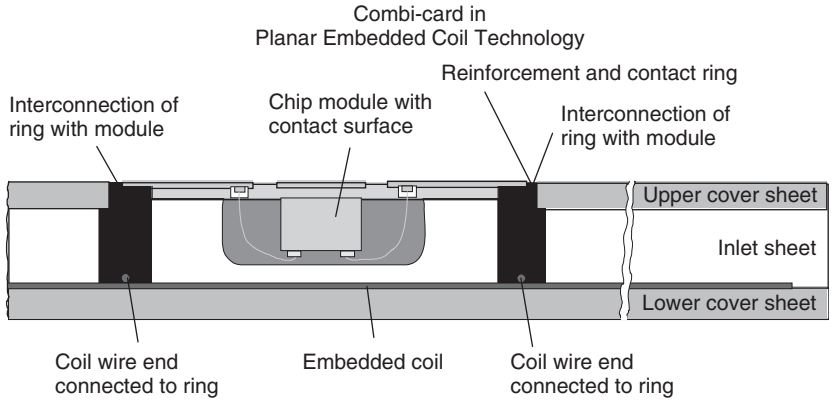


**Figure 10.26** Possible layout of a dual interface smart card. The chip module is connected to both contact surfaces (like a telephone smart card) and a transponder coil (reproduced by permission of Amatech GmbH & Co. KG, Pfronten)

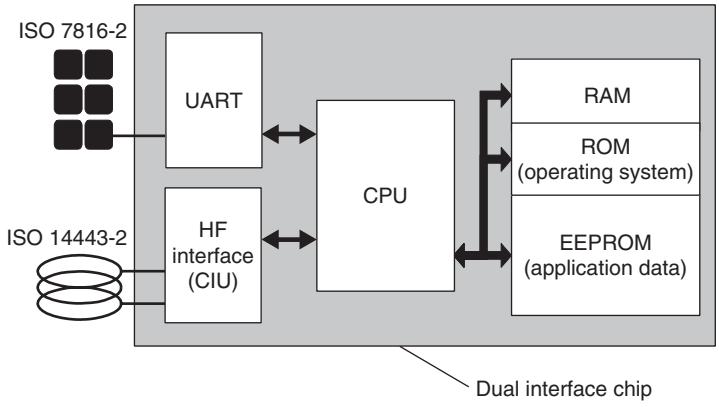


**Figure 10.27** Block diagram of a dual interface card. Both smart card interfaces can be addressed independently of one another

The philosophy underlying the dual interface card is that the smart card interface is completely independent of the smart card logic or smart card software. The interface, whether contact or contactless, is completely transparent to the transmitted application data so that, from the point of view of the application software, the interface used is unimportant. The interface is thus exchangeable at will, and interface and logic components can be combined as desired. The greatest advantage of the dual interface card for the user and system operator is the option of being able to draw upon existing infrastructure (generally contact readers) when introducing new applications. Also, from the point of view of the *security requirements* of a smart card, there is no difference between a contact and a contactless smart card. Due to the transparency of the interface, the replay and fraud of security-related data that has been transmitted is effectively ruled out by the methods defined in ISO/IEC 7816 (e.g. 'secure messaging'), regardless of the interface used.

The greatest difference between a contactless and a contact smart card is the power available. A contactless smart card in accordance with ISO 14443 has only around 5 mW available for operation at the maximum distance from the reader ($H_{\min} = 1.5$ A/m) (Mühlberger, 2001). A contact smart card, on the other hand, may have 7.2 mW (GSM 11.13), 50 mW (GSM 11.11) or even up to 300 mW (ISO 7816-3 Class A: 5 V, 60 mA) available, depending upon its specification (Philipp, 2001). This calls for completely new concepts in the development of contactless microprocessor chips. For example, the use of a *PMU* (*power management unit*) on the chip, which can automatically separate inactive circuit parts of the chip from the power supply to save energy, is recommended. Furthermore, ultra-low-power and low-voltage technology is used in all dual interface chips so that the available power can be optimally exploited.

An explicit switching between contactless and contact operation on the chip is not necessary. In the simplest case it is sufficient to use the validity of the data received via one of the two interfaces as the evaluation criterion for further operation. Some chips provide the programmer with status flags that allow the currently active operating mode to be interrogated. Moreover, the signals (frequency, voltage) present at the RF interface or the chip contacts are evaluated.

#### 10.2.1.1 MIFARE® Plus

The block diagram in Figure 10.28 shows a very early approach to the dual interface card. This chip was developed jointly by Philips Semiconductors Gratkorn and Siemens HL (now Infineon AG) as early as 1997. Since it was not possible using the semiconductor technologies available at the time to reliably operate a microprocessor with the power available via the contactless interface, an unconventional solution was selected.

At the heart of this chip is an 8 Kbyte EEPROM memory, the Common EEPROM, in which the application data was stored. In a similar manner to a dual port RAM, this common EEPROM can be accessed via two interfaces that are completely separate from each other from the point of view of circuitry. The inactive interface at any time is completely separated from the power supply of the chip, so that the power available in contactless operation is used optimally.

The contactless interface is based upon a *state machine*, which forms a contactless *MIFARE®* memory card. From the point of view of a contactless reader this dual interface card thus behaves like a memory card with a segmented EEPROM memory, in which the arrangement of the individual segments and memory blocks are identical to that of a conventional MIFARE® card (see Section 10.1.3.5).

The contact interface, on the other hand, is based upon a *microprocessor* with its own *smart card operating system*. The above-mentioned memory segmentation is once again present when the microprocessor accesses the common EEPROM. The operating system can therefore only read and write the common EEPROM in blocks within the corresponding sectors.

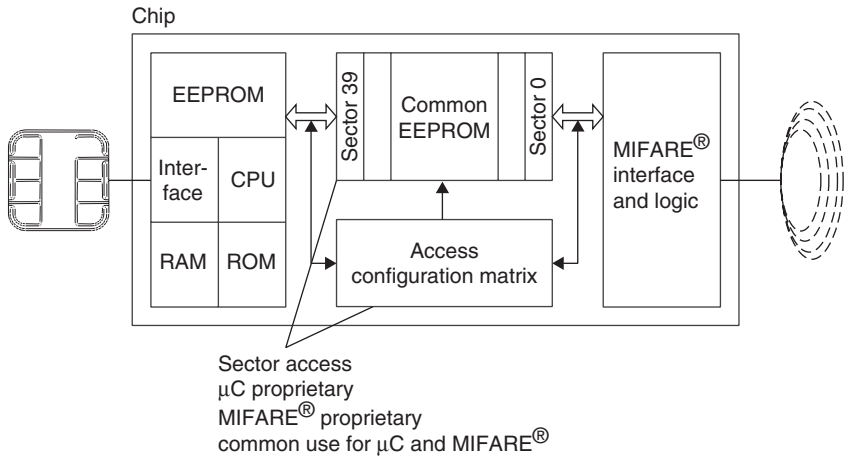


**Figure 10.28** Block diagram of the MIFARE®-plus 'dual interface card' chip. In contactless operating mode the common EEPROM is accessed via a MIFARE®-compatible state machine. When operating via the contact interface a microprocessor with its own operating system accesses the same memory (reproduced by permission of SLE 44R42, Infineon AG, Munich)

In addition, the write and read rights for individual memory blocks of the common EEPROM can be configured separately for the contactless and contact interface. These access rights are set and monitored by the Access Configuration Matrix. This also facilitates the realisation of hierarchical security concepts.

#### 10.2.1.2 Modern Concepts for the Dual Interface Card

Figure 10.29 shows the block diagram of a modern dual interface card. This card is based upon a 8051 microprocessor with a *smart card operating system*. The contactless interface is formed by a CIU (*contactless interface unit*), which can be configured by the CPU via register addresses or can also facilitate a status interrogation of the CIU.

A modern CIU automatically performs the transfer of a data block from and to a reader and thereby automatically performs the necessary coding or decoding of the data stream according to the specifications in the standard ISO/I EC14443-2 and ISO/I EC14443-3. Often it also performs the automatic calculation and verification of the transmitted CRCs.

To send a data block, the operating system only needs to store the data block to be sent in the RAM memory of the chip and load the corresponding memory address and block length into the configuration register of the CIU. The CPU is no longer actively involved in the initiated data transfer and can thus be switched into *power-down mode* (*power-saving mode*) for the duration of the data transfer (Mühlberger, 2001). When a data block is received, the data from the CIU is then automatically stored in the chip's RAM and the *CRC* of the received block is verified.

Short transaction times represent a particularly important requirement for contactless applications. For ticketing applications a maximum transaction time of 100 ms is a generally accepted value. In order to facilitate the calculation of cryptographic functions within this short time interval, many dual interface chips have *cryptographic coprocessors*. In banking applications, symmetrical encryption algorithms such as *DES* (data encryption standard) and triple DES are normally used

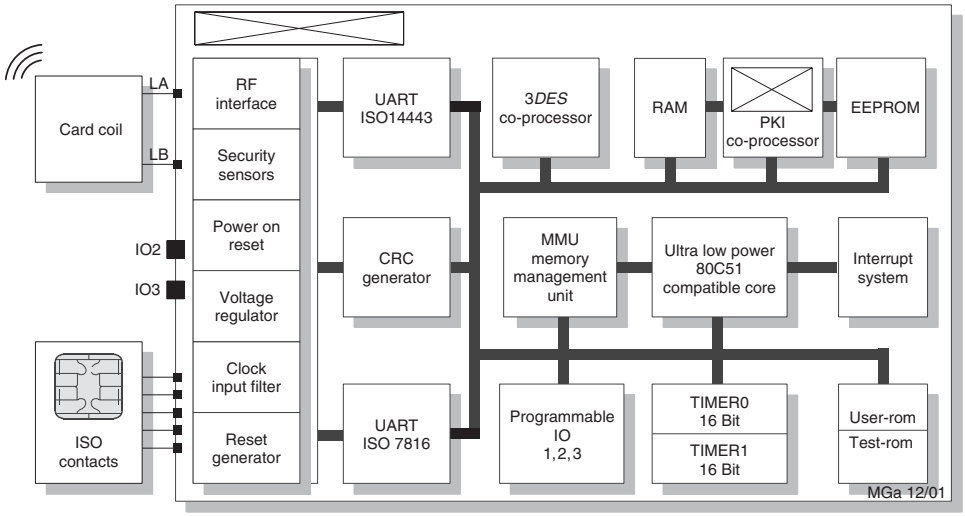


**Figure 10.29** Block diagram of the dual interface card chip 'MIFARE® ProX' (reproduced by permission of Philips Semiconductors Gratkorn, A-Gratkorn)

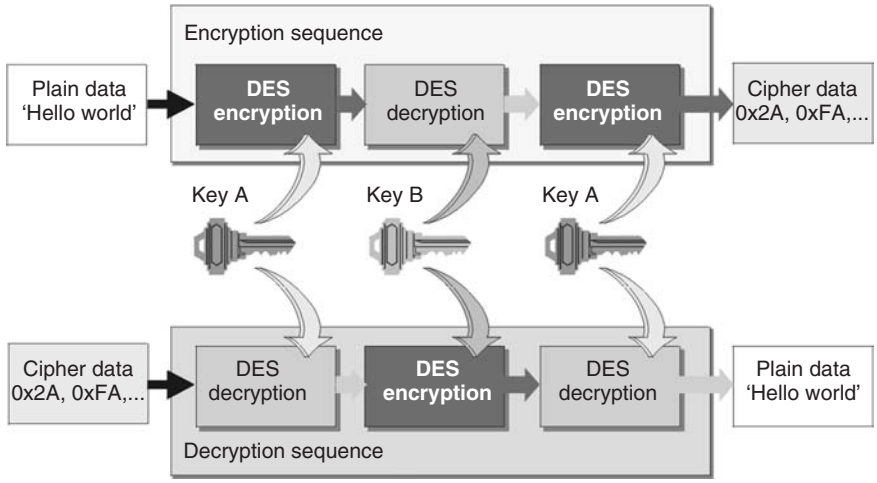


**Figure 10.30** Calculation of the 3DES (triple DES). Encryption (above) and decryption (below) of a data block (reproduced by permission of Philips Semiconductors Gratkorn, A-Gratkorn)

(Figure 10.30). *Encryption* and *decryption* by software is time-consuming and therefore not practical in a contactless application. DES encryption can be calculated several hundreds of times quicker using a coprocessor than is possible with the software solution (Mühlberger, 2001). The CPU need only enter the data to be encrypted and the key in the correct register (DDAT and DKEY in Figure 10.31) and start the calculation by means of a control register (DCNTRL).

Asymmetric key algorithms ('public key' procedures such as *RSA*) will become increasingly important in future. Typical applications are electronic signatures (digital signature) or the validity

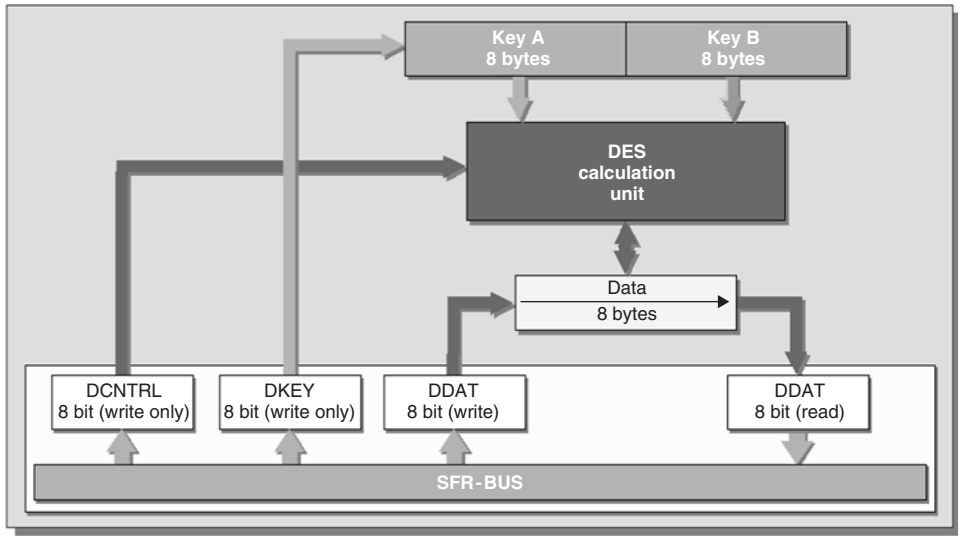


**Figure 10.31** Block diagram of a DES coprocessor. The CPU key and data can be transferred to the coprocessor by means of its own SFR (special function register) (reproduced by permission of Philips Semiconductors Gratkorn, A-Gratkorn)

testing of electronic documents (certification). Therefore, the first dual interface chips already have coprocessors for asymmetric algorithms (e.g. Fame PKI in Figure 10.29).

## 10.3 Memory Technology

After the state machine or microprocessor, the most important component of a data carrier is the memory that user data is read from or written to. Read-only data is defined at the manufacturing stage by the chip mask (exposure mask) or permanently burnt into the memory by a laser. The use of a laser also makes it possible to programme *unique numbers* (*serial numbers* that are issued only once) or consecutive numbers into the data carrier.

If data is to be written to the data carrier, then RAM, EEPROM or FRAM cells are also incorporated into the chip. However, only EEPROM and FRAM cells can store the written data for long periods (typical retention periods are 10 years) without a power supply.

### *10.3.1 RAM*

RAM is memory that can be used for the storage of temporary data. When the power supply is removed, the stored data is lost forever. In transponders, RAM is mainly used for the temporary storage of data that exists briefly during operation in the interrogation zone of a reader. In active transponders that have their own battery, RAMs with battery backups are sometimes used for the long-term storage of data.

The main component of the (S)RAM memory cell is a D-flip-flop. Figure 10.32 shows the block diagram for a single memory cell. Each memory cell has the connections DI (data input), WE (write enable) and DO (data out). If data is only to be read from the memory cell, it is sufficient to activate the selected cell with logic 1 levels at the allocated address connections $Y_i$ and $X_i$.

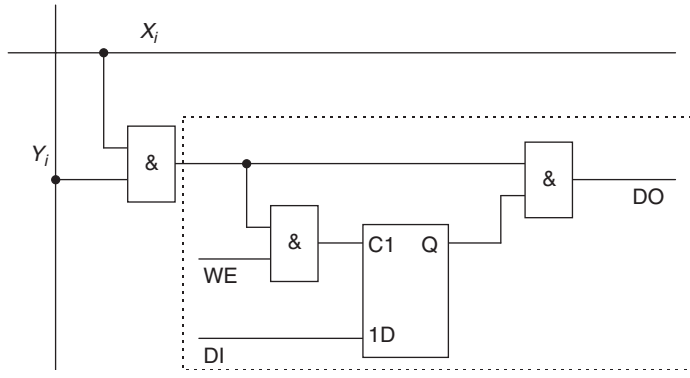


**Figure 10.32** Simplified functional block diagram of an (S)RAM cell

To write data to the memory cell, the WE connection must also be switched to the 1 level. If there is a 1 level at C1 input data is written to the flip-flop.

## *10.3.2 EEPROM*

The operating principle of an EEPROM cell is based upon the ability of a capacitor (condenser) to store electric charge over long periods. An EEPROM therefore represents a tiny capacitor that can be charged or discharged. A charged capacitor represents a logic '1', a discharged capacitor represents a logic '0'.

In its simplest form, an EEPROM cell basically consists of a modified field effect transistor on a carrier material (substrate) made of silicon. The EEPROM cell contains an additional gate between the control gate of the field effect transistor and the substrate, which is not connected to an external power supply, and which is positioned at a very short distance (~10 nm) from the carrier material. This so-called *floating gate* can be charged or discharged via the substrate using the tunnel effect, and therefore represents a capacitor. For the tunnel effect to exist there must be a sufficiently large potential difference at the thin insulating tunnelling oxidation layer between the floating gate and the substrate.

The flow of current between source and drain can be controlled by the stored charge of the floating gate. A negatively charged floating gate gives rise to a high threshold voltage between the source and drain of the field effect transistor, meaning that this is practically blocked. The current flow through the field effect transistor of an EEPROM cell is evaluated by signal amplification of the memory chip, whereby the strength of the current clearly indicates a '0' or '1'.

To write a '0' or '1' to an EEPROM cell, a high positive or negative voltage is applied to the control gate, which activates the tunnel effect. The voltage required to charge the EEPROM cell is around 17 V at the control gate which falls to 12 V at the floating gate. However, RFID data carriers are supplied with 3 or 5 V from the RF interface (or a battery). Therefore a voltage of 25 V is generated from the low supply voltage of the chip using a cascaded charging pump integrated into the chip, which provides the required 17 V after stabilisation.

It takes between 5 and 10 ms to charge an EEPROM cell. The number of possible write cycles is limited to between 10 000 and 100 000 for EEPROM cells. This is because in every write operation electrons are captured by the tunnelling oxidation layer and these are never released. These electrons influence the threshold voltage of the field effect transistor, with the effect becoming greater with every write operation. As soon as this parasitic effect of the tunnelling oxidation layer becomes

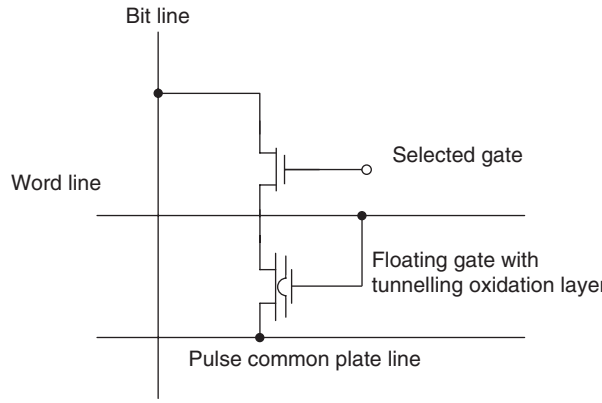


**Figure 10.33** The EEPROM cell consists of a modified field effect transistor with an additional floating gate

greater than the primary influence of the floating gate the EEPROM cell has reached its *lifetime* (Rankl and Effing, 1996).

A charged floating gate loses its charge due to insulation losses and quantum mechanical effects. However, according to semiconductor manufacturer's figures, EEPROMs still provide reliable data retention for 10 years. If the EEPROM cell is nearing its lifetime, then information is only stored for short periods, which are determined by the parasitic influence of the oxide layer. For this reason, a plausibility test should be carried out on stored data using checksums (e.g. CRC) in RFID data carriers with EEPROM memories.

### *10.3.3 FRAM*

High power consumption during writing and high write times of around 5–10 ms have a detrimental effect on the performance of RFID systems that employ EEPROM technology. A new, non-transient memory technology, which should improve this situation, has been under development for around 20 years: ferroelectric RAM, or *FRAM*. At the end of the 1980s the company Ramtron was established, which collaborated with Hitachi on the development of this technology. The first RFID systems using FRAM technology were produced by the Ramtron subsidiary Racom. However, the development of FRAMs is still associated with many problems, and so RFID systems using FRAMs are still not widespread.

The principle underlying the FRAM cell is the ferroelectric effect, i.e. the capability of a material to retain an electrical polarisation, even in the absence of an electric field. The polarisation is based upon the alignment of an elementary dipole within a crystal lattice in the ferroelectric material due to the effect of an electric field that is greater than the coercive force of the material. An opposing electric field causes the opposite alignment of the internal dipole. The alignment of the internal dipole takes on one of two stable states, which are retained after the electric field has been removed.

Figure 10.34 shows a simplified model of the ferroelectric lattice. The central atom moves into one of the two stable positions, depending upon the field direction of the external electric field. Despite this, FRAM memories are completely insensitive to foreign electric interference fields and magnetic fields.

To read the FRAM cell (Figure 10.35), an electric field ($U_{CC}$) is applied to the ferroelectric capacitor via a switching transistor. If the stored information represents a logic '1' then the cell is in position A on the hysteresis loop. If, on the other hand, it represents a logic '0', the cell is in position C. By the application of the voltage $U_{CC}$ we move to point B on the hysteresis loop,

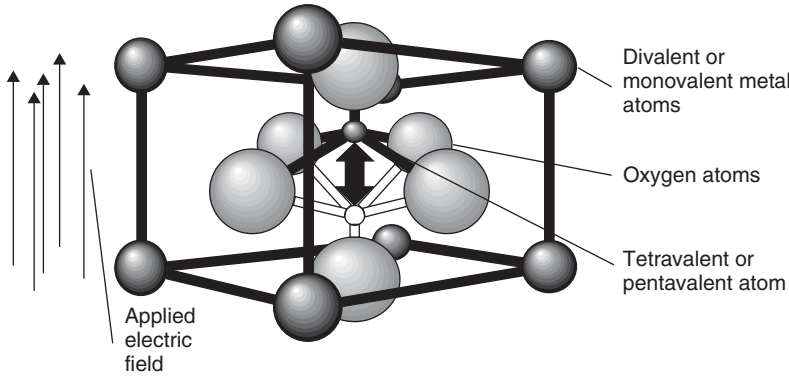


**Figure 10.34** Basic configuration of a ferroelectric crystal lattice: an electric field steers the inner atom between two stable states

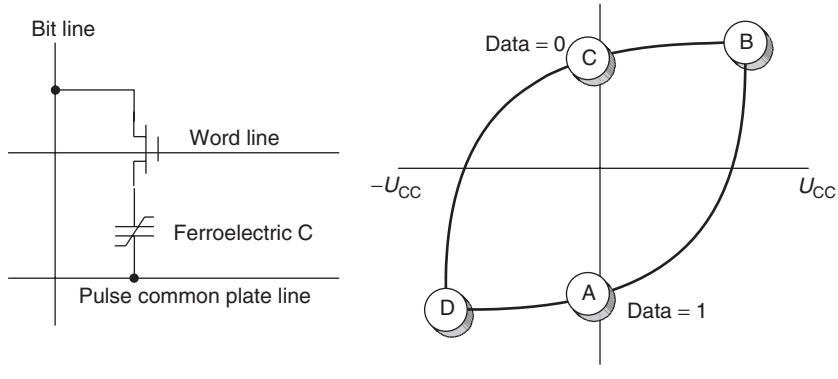


**Figure 10.35** FRAM cell structure (1 bit) and hysteresis loop of the ferroelectric capacitor

releasing electric charge, which is captured and evaluated by the signal amplifiers on the memory chip. The magnitude of escaping charge clearly indicates a '1' or '0', because a significantly greater charge escapes in the transition from state A to B than in the transition from state C to B.

After the external (read) field $U_{CC}$ has been removed, the FRAM cell always returns to state C, and thus a stored '1' is lost, because state C represents a '0'. For this reason, as soon as a '1' is read, the memory chip's logic automatically performs a rewrite operation. This involves applying an opposing electric field $-U_{CC}$ to the ferroelectric capacitor, which changes the state of the FRAM cell, moving it to point D on the hysteresis loop. After the removal of the electric field the FRAM cell falls into state D, which recreates the originally stored state A (Haberland, 1996).Writing a '1' or '0' to the FRAM cell is achieved simply by the application of an external voltage $-U_{CC}$ or $+U_{CC}$. After the voltage is removed the FRAM cell returns to the corresponding residual state A or C.

## *10.3.4 Performance Comparison FRAM – EEPROM*

Unlike EEPROM cells, the write operation of a FRAM cell occurs at a high speed. Typical *write times* lie in the region of 0.1 µs. FRAM memories can therefore be written in 'real time', i.e. in the bus cycle time of a microprocessor or the cycle time of a state machine.

**Table 10.3** Comparison between FRAM and EEPROM (Panasonic, n.d)

| | FRAM | EEPROM |
|---|---|---|
| Size of memory cell ($\mu m^2$) | ~80 | ~130 |
| Lifetime in write cycles | $10^{12}$ | $10^5$ |
| Write voltage (V) | 2 | 12 |
| Energy for writing (μJ) | 0.0001 | 100 |
| Write time | 0.1 μs | 10 ms (10 000 μs) |

FRAMs also beat EEPROMs in terms of power consumption by orders of magnitude. FRAM memory was therefore predestined for use in RFID systems. However, problems in combining CMOS processors (microprocessor) and analogue circuits (RF interface) with FRAM cells on a single chip still prevent the rapid spread of this technology.

## 10.4 Measuring Physical Variables

### *10.4.1 Transponder with Sensor Functions*

Battery-operated *telemetry transmitters* in the frequency range 27.125 or 433 MHz are normally used for the detection of *sensor data*. The fields of application of these systems are very limited, however, and are restricted by their size and the lifetime of the battery.

Specially developed RFID transponders incorporating an additional *A/D converter* on the ASIC chip facilitate the measurement of physical variables. In principle, any sensor can be used, in which the resistance alters in proportion to physical variables. Due to the availability of miniaturised *temperature sensors* (NTC), this type of system was first developed for temperature measurement (Figure 10.36).

Temperature sensor, transponder ASIC, transponder coil and backup capacitors are located in a glass capsule, like those used in animal identification systems (see Section 13.6.1). (Ruppert, 1994). The passive RFID technology with no battery guarantees the lifelong functioning of the transponder and is also environmentally friendly.

The measured value of the A/D converter can be read by a special reader command. In read-only transponders the measured value can also be appended to a periodically emitted identification number (serial number).

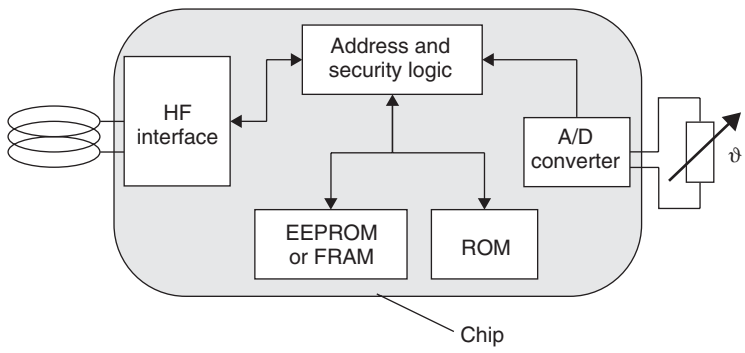


**Figure 10.36** Inductively coupled transponder with additional temperature sensor

Nowadays, the main field of application for transponders with sensor functions is wireless temperature measurement in animal keeping. In this application the body temperatures of domestic and working animals are measured for health monitoring and breeding and birth control. The measurement can be performed automatically at feed and watering points or manually using a portable reader (Ruppert, 1994).

In industrial usage, transponders with a sensor function may be used anywhere where physical variables need to be measured in rotating or moving parts where cable connections are impossible.

In addition to the classical *temperature sensors* a large number of sensors can already be integrated. Due to their power consumption, however, only certain sensors are suitable for passive (battery-free) transponders. Table 10.4 (Bögel *et al.*, 1998) shows an overview of sensors that can be used in active or passive transponders. Solutions that can be realised as a single chip are cheaper.

## *10.4.2 Measurements Using Microwave Transponders*

Industry-standard microwave transponders can also be used to measure speed and distance by the analysis of the *Doppler effect* and *signal travelling times*.

The Doppler effect occurs in all electromagnetic waves and is particularly easy to measure in microwaves. If there is a relative movement between the transmitter and a receiver, then the receiver detects a different frequency than the one emitted by the transmitter. If the receiver moves closer to the transmitter, then the wavelength will be shortened by the distance that the receiver has covered during one oscillation. The receiver thus detects a higher frequency.

If the electromagnetic wave is reflected back to the transmitter from an object that has moved, then the received wave contains twice the frequency shift. There is almost always an angle $\alpha$ between the direction of propagation of the microwaves and the direction of movement of the 'target'. This leads to a second, expanded Doppler equation:

$$f_{\mathrm{d}} = \frac{f_{\mathrm{TX}} \cdot 2v}{c} \cdot \cos\alpha \tag{10.1}$$

$$v = \frac{f_{\mathrm{d}} \cdot c}{2 f_{\mathrm{TX}} \cdot \cos\alpha} \tag{10.2}$$

The Doppler frequency $f_{\mathrm{d}}$ is the difference between the transmitted frequency $f_{\mathrm{TX}}$ and the received frequency $f_{\mathrm{RX}}$. The relative speed of the object is $v \cdot \cos\alpha$, $c$ is the speed of light, $3 \times 10^8$ m/s.

**Table 10.4** Sensors that can be used in passive and active transponders (*mm* = micromechanic)

| Sensor | Integratable | Passive transponder | Active transponder | Single-chip transponder |
|---|---|---|---|---|
| Temperature | Yes | Yes | Yes | Yes |
| Moisture | Yes | Yes | Yes | Yes |
| Pressure | *mm* | Yes | Yes | Yes |
| Shock | *mm* | Yes | Yes | |
| Acceleration | *mm* | | Yes | |
| Light | Yes | Yes | Yes | Yes |
| Flow | Yes | | Yes | |
| PH value | Yes | | Yes | |
| Gases | Yes | | Yes | |
| Conductivity | Yes | | Yes | Yes |

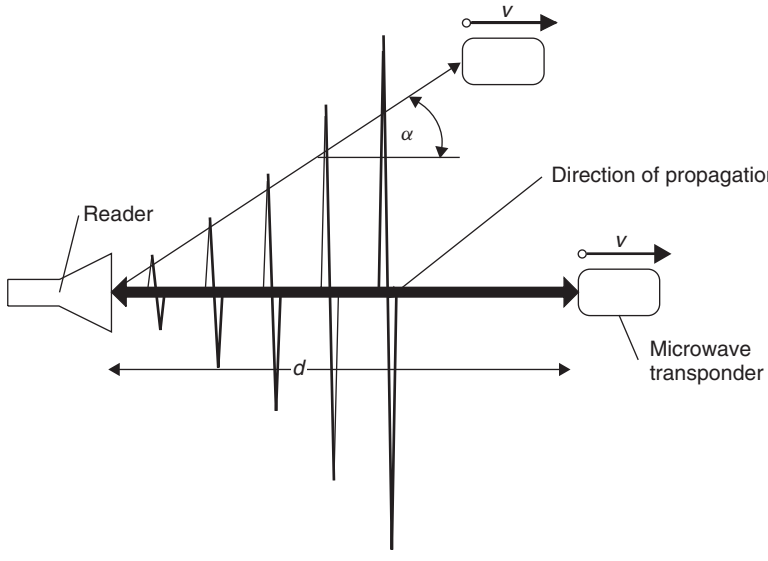


**Figure 10.37** Distance and speed measurements can be performed by exploiting the Doppler effect and signal travelling times

**Table 10.5** Doppler frequencies at different speeds

| $f_d$(Hz) | $V$ (m/s) | $V$ (km/h) |
|---|---|---|
| 0 | 0 | 0 |
| 10 | 0.612 | 1.123 |
| 20 | 1.224 | 4.406 |
| 50 | 3.061 | 9.183 |
| 100 | 6.122 | 18.36 |
| 200 | 12.24 | 36.72 |
| 500 | 30.61 | 110.2 |
| 1000 | 61.22 | 220.39 |
| 2000 | 122.4 | 440.6 |

A transmission frequency of 2.45 GHz yields the Doppler frequencies shown in Table 10.5 at different speeds.

To measure the distance $d$ of a transponder, we analyse the travelling time $t_d$ of a microwave pulse reflected by a transponder:

$$d = \frac{1}{2} \cdot t_d \cdot c \tag{10.3}$$

The measurement of the speed or distance of a transponder is still possible if the transponder is already a long way outside the normal interrogation zone of the reader, because this operation does not require communication between reader and transponder.

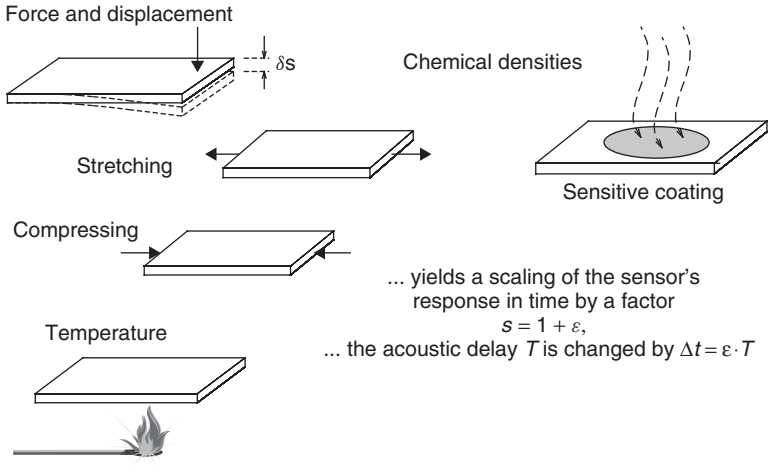


**Figure 10.38** Influence of quantities on the velocity $v$ of the surface wave in piezo crystal are shear, tension, compression and temperature. Even chemical quantities can be detected if the surface of the crystal is suitably coated (reproduced by permission of Technische Universität Wien, Institut für allgemeine Elektrotechnik und Elektronik)

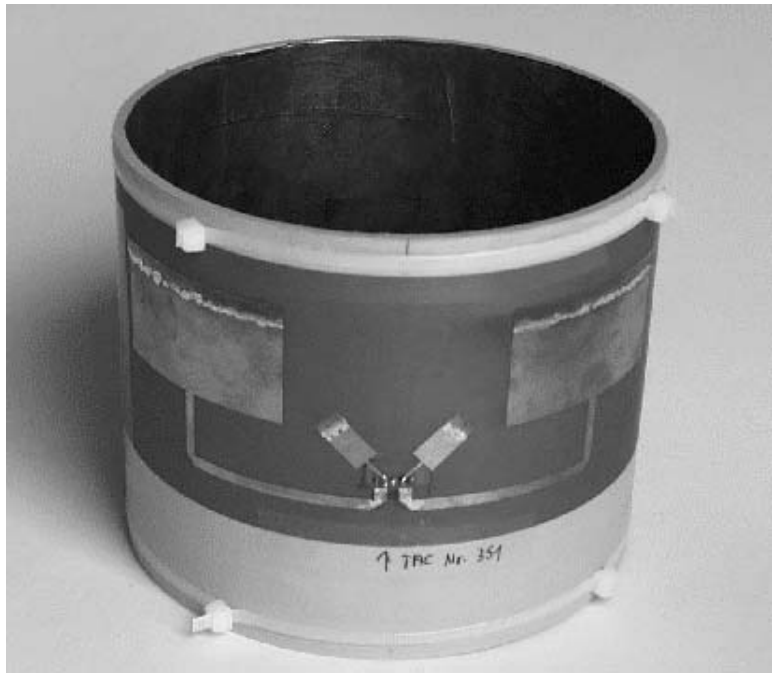

**Figure 10.39** Arrangement for measuring the temperature and torque of a drive shaft using surface wave transponders. The antenna of the transponder for the frequency range 2.45 GHz is visible on the picture (reproduced by permission of Siemens AG, ZT KM, Munich)

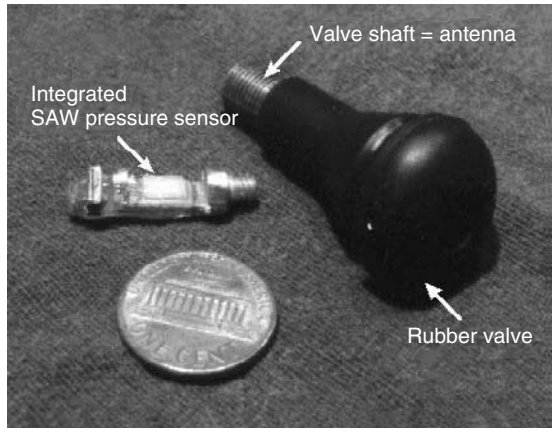


**Figure 10.40** A surface wave transponder is used as a pressure sensor in the valve shaft of a car tyre valve for the wireless measurement of tyre pressure in a moving vehicle (reproduced by permission of Siemens AG, ZT KM, Munich)

## *10.4.3 Sensor Effect in Surface Wave Transponders*

Surface wave transponders are excellently suited to the measurement of *temperature* or mechanical quantities such as *stretching, compression, bending* or *acceleration*. The influence of these quantities leads to changes in the velocity $v$ of the surface wave on the piezocrystal (Figure 10.38). This leads to a linear change of the phase difference between the response pulses of the transponder. Since only the differences of *phase position* between the *response pulses* are evaluated, the measuring result is fully independent of the distance between transponder and reader.

A precise explanation of the physical relationships can be found in Section 4.3.4.

The working range of surface wave transponders extends to low temperatures of $-196\,^{\circ}$C (liquid nitrogen) and in a vacuum it even extends to very low temperatures.[1]

The normal surface wave crystals have only limited suitability for high temperatures. For example, in lithium niobate segregation occurs at a temperature of just $300\,^{\circ}$C; in quartz there is a phase transition at $573\,^{\circ}$C. Moreover, at temperatures above $400\,^{\circ}$C the aluminium structure of the interdigital transducer is damaged.

However, if we use a crystal that is suitable for high temperatures such as langasite with platinum electrodes, surface wave sensors up to temperatures as high as around $1000\,^{\circ}$C can be used (Reindl *et al.*, 1998c).

[1] At very low temperatures, however, the sensitivity $S$ of a SAW transponder ultimately tends towards zero.)

# 11

# Readers

## 11.1 Data Flow in an Application

A *software application* that is designed to read data from a contactless data carrier (transponder) or write data to a contactless data carrier, requires a contactless *reader* as an interface. From the point of view of the application software, access to the data carrier should be as transparent as possible. In other words, the read and write operations should differ as little as possible from the process of accessing comparable data carriers (smart card with contacts, serial EEPROM).

Write and read operations involving a contactless data carrier are performed on the basis of the *master–slave principle* (Figure 11.1). This means that all reader and transponder activities are initiated by the application software. In a hierarchical system structure the application software represents the master, while the reader, as the slave, is only activated when write/read commands are received from the application software.

To execute a command from the application software, the reader first enters into communication with a transponder. The reader now plays the role of the master in relation to the transponder. The transponder therefore only responds to commands from the reader and is never active independently (except for the simplest read-only transponders. See Chapter 10).

A simple read command from the application software to the reader can initiate a series of communication steps between the reader and a transponder. In the example in Table 11.1, a read command first leads to the activation of a transponder, followed by the execution of the authentication sequence and finally the transmission of the requested data.

The reader's main functions are therefore to activate the data carrier (transponder), structure the communication sequence with the data carrier, and transfer data between the application software and a contactless data carrier. All features of the contactless communication, i.e. making the connection, and performing anticollision and authentication procedures, are handled entirely by the reader.

## 11.2 Components of a Reader

A number of contactless transmission procedures have already been described in the preceding chapters. Despite the fundamental differences in the type of coupling (inductive – electromagnetic), the communication sequence (FDX, HDX, SEQ), the data transmission procedure from the transponder to the reader (load modulation, backscatter, subharmonic) and, last but not least, the frequency range, all readers are similar in their basic operating principle and thus in their design.

*RFID Handbook: Fundamentals and Applications in Contactless Smart Cards, Radio Frequency Identification and Near-Field Communication, Third Edition.* Klaus Finkenzeller
© 2010 John Wiley & Sons, Ltd

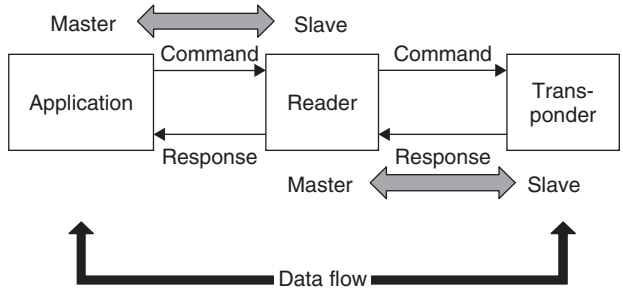


**Figure 11.1** Master–slave principle between application software (application), reader and transponder

**Table 11.1** Example of the execution of a read command by the application software, reader and transponder

| Application ↔ reader | Reader ↔ transponder | Comment |
|---|---|---|
| → Blockread_Address[00] | | Read transponder memory [address] |
| | → Request | Transponder in the field? |
| | ← ATR_SNR[4712] | Transponder operates with serial number |
| | → GET_Random | Initiate authentication |
| | ← Random[081514] | |
| | → SEND_Token1 | |
| | ← GET_Token2 | Authentication successfully completed |
| | → Read_@[00] | Read command [address] |
| | ← Data[9876543210] | Data from transponder |
| ← Data[9876543210] | | Data to application |

Readers in all systems can be reduced to two fundamental functional blocks: the control system and the *RF interface*, consisting of a transmitter and receiver (Figure 11.2). Figure 11.3 shows a reader for an inductively coupled RFID system. On the right-hand side we can see the RF interface, which is shielded against undesired spurious emissions by a tinplate housing. The control system is located on the left-hand side of the reader and, in this case, it comprises an ASIC module and microcontroller. In order that it can be integrated into a software application, this reader has an RS232 interface to perform the data exchange between the reader (slave) and the external application software (master).

## *11.2.1 RF Interface*

The reader's RF interface performs the following functions:

- generation of high-frequency transmission power to activate the transponder and supply it with power;
- modulation of the transmission signal to send data to the transponder;
- reception and demodulation of RF signals transmitted by a transponder.

The RF interface contains two separate signal paths to correspond with the two directions of data flow from and to the transponder (Figure 11.4). Data transmitted to the transponder travels

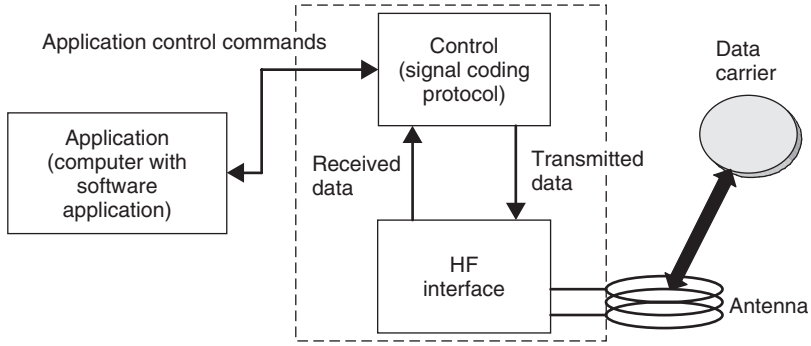


**Figure 11.2** Block diagram of a reader consisting of control system and RF interface. The entire system is controlled by an external application via control commands

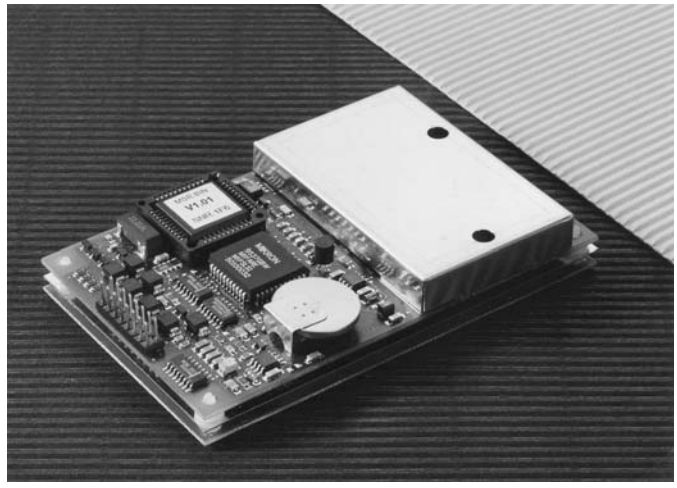

**Figure 11.3** Example of a reader. The two functional blocks, RF interface and control system, can be clearly differentiated (MIFARE® reader, reproduced by permission of Philips Electronics N.V)

through the *transmitter arm*. Conversely, data received from the transponder is processed in the *receiver arm*. We will now analyse the two signal channels in more detail, giving consideration to the differences between the different systems.

#### 11.2.1.1 Inductively Coupled System, FDX/HDX

First, a signal of the required operating frequency, i.e. 135 kHz or 13.56 MHz, is generated in the transmitter arm by a stable (frequency) quartz oscillator. To avoid worsening the noise ratio in relation to the extremely weak received signal from the transponder, the *oscillator* is subject to high demands regarding phase stability and sideband noise.

The oscillator signal is fed into a modulation module controlled by the baseband signal of the signal coding system. This *baseband signal* is a keyed direct voltage signal (TTL level), in which the binary data is represented using a serial code (Manchester, Miller, NRZ). Depending upon the modulator type, *ASK* or *PSK modulation* is performed on the oscillator signal.

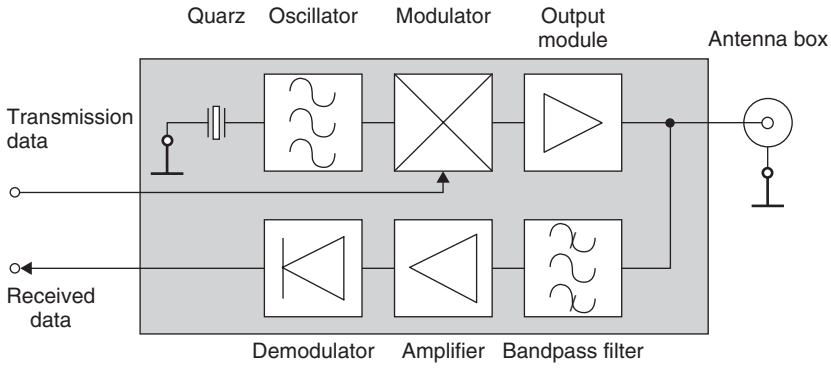


**Figure 11.4** Block diagram of an RF interface for an inductively coupled RFID system

*FSK modulation* is also possible, in which case the baseband signal is fed directly into the frequency synthesiser.

The modulated signal is then brought to the required level by a power output module and can then be decoupled to the antenna box.

The *receiver arm* begins at the antenna box, with the first component being a steep edge bandpass filter or a notch filter. In FDX/HDX systems this filter has the task of largely blocking the strong signal from the transmission output module and filtering out just the response signal from the transponder. In subharmonic systems, this is a simple process, because transmission and reception frequencies are usually a whole octave apart. In systems with load modulation using a *subcarrier* the task of developing a suitable filter should not be underestimated because, in this case, the transmitted and received signals are only separated by the subcarrier frequency. Typical subcarrier frequencies in 13.56 MHz systems are 847 or 212 kHz.

Some LF systems with load modulation and no subcarrier use a notch filter to increase the modulation depth (duty factor) – the ratio of the level to the load modulation sidebands – and thus the duty factor by reducing their own carrier signal. A different procedure is the rectification and thus demodulation of the (load) amplitude modulated voltage directly at the reader antenna. A sample circuit for this can be found in Section 11.3.

#### 11.2.1.2 Microwave Systems – Half-Duplex

The main difference between *microwave systems* and low-frequency inductive systems is the frequency synthesising: the operating frequency, typically 2.45 GHz, cannot be generated directly by the quartz oscillator, but is created by the multiplication (excitation of harmonics) of a lower oscillator frequency. Because the modulation is retained during frequency multiplication, modulation is performed at the lower frequency.

Some microwave systems employ a *directional coupler* to separate the system's own transmission signal from the weak backscatter signal of the transponder (Integrated Silicon Design, 1996).

A directional coupler (Figure 11.6) consists of two continuously coupled homogeneous wires (Meinke and Gundlack, 1992). If all four ports are matched and power $P_1$ is supplied to port 1, then the power is divided between ports 2 and 3, with no power occurring at the decoupled port 4. The same applies if power is supplied to port 3, in which case the power is divided between ports 1 and 2.

A directional coupler is described by its *coupling loss*:

$$a_k = -20 \cdot \ln \left| P_{②} / P_{①} \right| \tag{11.1}$$

and *directivity*:

$$a_D = -20 \cdot \ln \left| P_{④} / P_{②} \right| \tag{11.2}$$

Directivity is the logarithmic magnitude of the ratio of undesired overcoupled power $P_4$ to desired coupled power $P_2$.

A directional coupler for a backscatter RFID reader should have the maximum possible directivity to minimise the decoupled signal of the transmitter arm at port 4. The coupling loss, on the other hand, should be low to decouple the maximum possible proportion of the reflected power $P_2$ from the transponder to the receiver arm at port 4. When a reader employing decoupling based upon a directional coupler is commissioned, it is necessary to ensure that the transmitter antenna is well (anechoically) set up. Power reflected from the antenna due to poor adjustment is decoupled at port 4 as backward power. If the directional coupler has a good coupling loss, even a minimal mismatching of the transmitter antenna (e.g. by environmental influences) is sufficient to increase the backward-travelling power to the magnitude of the reflected transponder power. Nevertheless, the use of a directional coupler gives a significant improvement compared with the level ratios achieved with a direct connection of transmitter output module and receiver input.

#### 11.2.1.3 Sequential Systems – SEQ

In a sequential RFID system the RF field of the reader is only ever transmitted briefly to supply the transponder with power and/or send commands to the transponder.

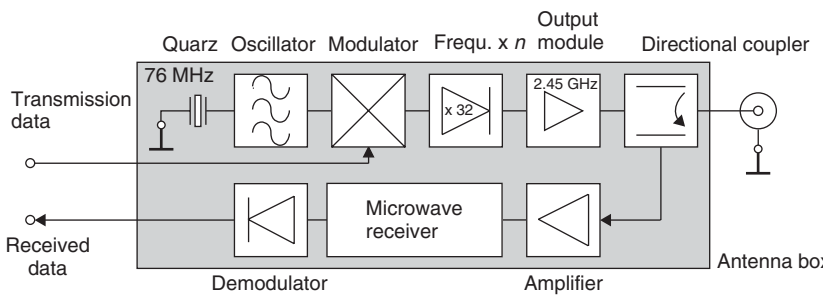


**Figure 11.5** Block diagram of an RF interface for microwave systems

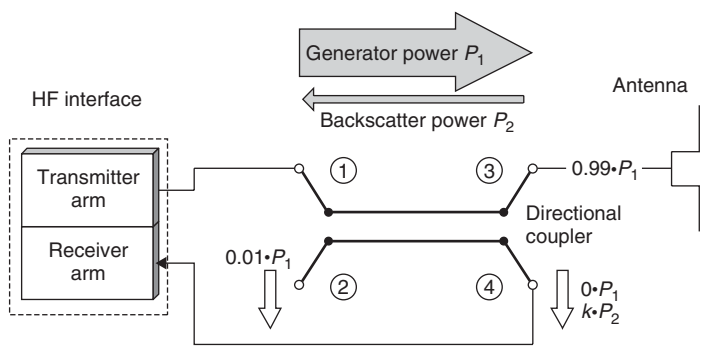


**Figure 11.6** Layout and operating principle of a directional coupler for a backscatter RFID system

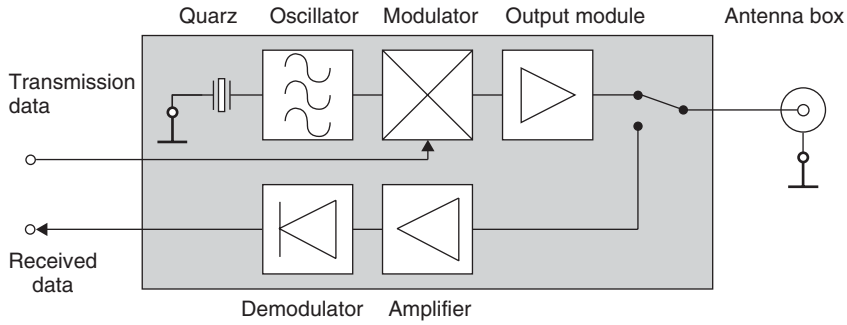


**Figure 11.7** RF interface for a sequential reader system

The transponder transmits its data to the reader while the reader is not transmitting. The transmitter and receiver in the reader are thus active sequentially, like a walkie-talkie, which also transmits and receives alternately.

The reader contains an instantaneous switching unit to switch between transmitter and receiver mode. This function is normally performed by PIN diodes in radio technology.

No special demands are made of the receiver in an SEQ system. Because the strong signal of the transmitter is not present to cause interference during reception, the SEQ receiver can be designed to maximise sensitivity. This means that the range of the system as a whole can be increased to correspond with the *energy range*, i.e. the distance between reader and transponder at which there is just enough energy for the operation of the transponder.

#### 11.2.1.4 Microwave System for SAW Transponders

A short electromagnetic pulse transmitted by the reader's antenna is received by the antenna of the *surface wave transponder* and converted into a surface wave in a piezoelectric crystal. A characteristic arrangement of partially reflective structures in the propagation path of the surface wave gives rise to numerous pulses, which are transmitted back from the transponder's antenna as a response signal (a much more comprehensive description of this procedure can be found in Section 4.3).

Due to the propagation delay times in the piezoelectric crystal the coded signal reflected by the transponder can easily be separated in the reader from all other electromagnetic reflections from the vicinity of the reader (see Section 4.3.3). The block diagram of a reader for surface wave transponders is shown in Figure 11.8.

A stable frequency and phase oscillator with a surface wave resonator is used as the high-frequency source. Using a rapid RF switch, short RF pulses of around 80 ns duration are generated from the oscillator signal, which are amplified to around 36 dBm (4 W peak) by the connected power output stage, and transmitted by the reader's antenna.

If a SAW transponder is located in the vicinity of the reader it reflects a sequence of individual pulses after a propagation delay time of a few microseconds. The pulses received by the reader's antenna pass through a low-noise amplifier and are then demodulated in a quadrature demodulator. This yields two orthogonal components ($I$ and $Q$), which facilitate the determination of the phase angle between the individual pulses and between the pulses and the oscillator (Bulst *et al.*, 1998). The information obtained can be used to determine the distance or speed between SAW transponder and reader and for the measurement of physical quantities (see Section 10.4.3).

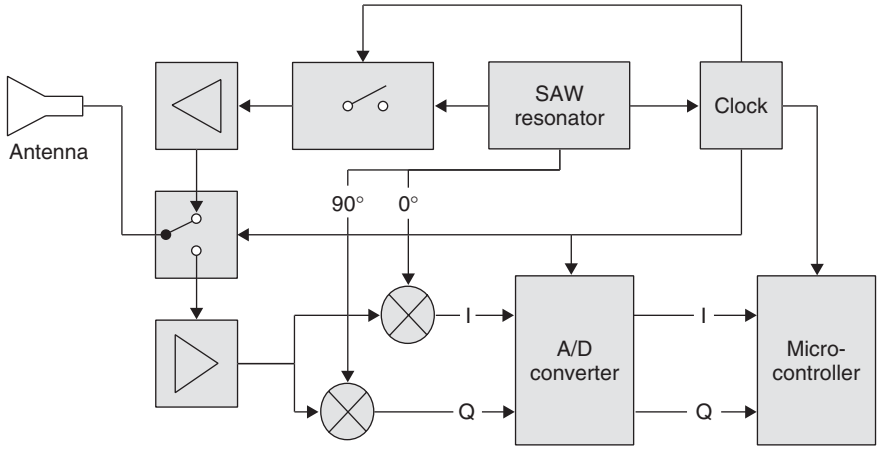


**Figure 11.8** Block diagram of a reader for a surface wave transponder

To be more precise, the reader circuit in Figure 11.8 corresponds with a *pulse radar*, like those used in flight navigation (although in this application the transmission power is much greater). In addition to the pulse radar shown here, other radar types (for example FM-CW radar) are also in development as readers for SAW transponders.

## *11.2.2 Control Unit*

The reader's control unit (Figure 11.9) performs the following functions:

- communication with the application software and the execution of commands from the application software;
- control of the communication with a transponder (master–slave principle);
- signal coding and decoding (Figure 11.10).

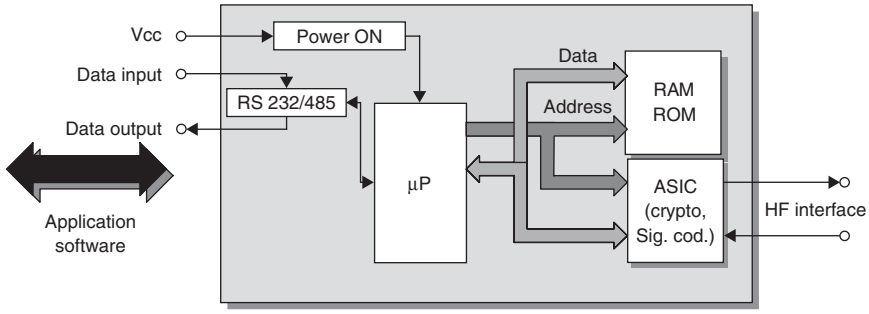


**Figure 11.9** Block diagram of the control unit of a reader. There is a serial interface for communication with the higher application software

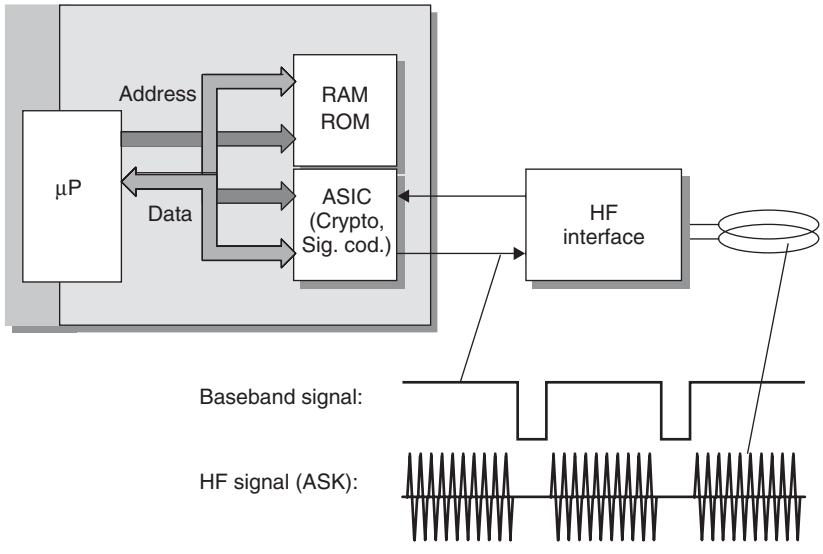


**Figure 11.10** Signal coding and decoding is also performed by the control unit in the reader

In more complex systems the following additional functions are available:

- execution of an anticollision algorithm;
- encryption and decryption of the data to be transferred between transponder and reader;
- performance of authentication between transponder and reader.

The control unit is usually based upon a microprocessor to perform these complex functions. Cryptological procedures, such as stream ciphering between transponder and reader, and also signal coding, are often performed in an additional ASIC module to relieve the processor of calculation intensive processes. For performance reasons the ASIC is accessed via the microprocessor bus (register orientated).

Data exchange between *application software* and the reader's control unit is performed by an RS232 or RS485 interface. As is normal in the PC world, NRZ coding (8-bit asynchronous) is used. The baud rate is normally a multiple of 1200 Bd (4800 Bd, 9600 Bd, etc.). Various, often self-defined, protocols are used for the communication protocol. Please refer to the handbook provided by your system supplier.

The interface between the RF interface and the control unit represents the state of the RF interface as a binary number. In an ASK modulated system a logic '1' at the modulation input of the RF interface represents the state 'RF signal on'; a logic '0' represents the state 'RF signal off' (for further information see Section 10.1.1).

## 11.3 Integrated Reader ICs

It is typical of RFID applications that there is a significant difference between the very large number of transponders used and the corresponding number of readers. In the early stages of RFID systems, small unit numbers as well as nonexistent standards for transmission procedures resulted in that readers still consisted of discrete components. Development costs were high as readers were

correspondingly large and expensive. As a result, readers were only manufactured in small batches of a few thousand.

In the early 1990s, demand for readers soared with the introduction of electronic *immobilisation* systems. In addition, these applications require almost the same number of transponders and readers as each vehicle has to be equipped with a reader. Since 1995 almost all new cars have been fitted with electronic immobilisation systems as standard, which means that the number of readers reached a completely new order of magnitude. The automotive supplier market is very price sensitive; and cost reduction and miniaturisation through integrating a small number of functional modules became worth pursuing. Now it became possible to integrate the whole analogous section of a reader onto a silicon chip, with only a few external components being necessary. For the required low bit rates, microprocessors could be used to *encode* and *decode the signal*. An example of such an integrated RF interface will be presented in the following Section 11.3.1.

In the late 1990s, RFID systems were increasingly used in mass applications. Modern contactless ticketing systems, contactless payment transactions, electronic passports or the electronic product code (EPC) require millions of transponders and simultaneously a correspondingly large number of readers. And above all, today there are standards available which means that one and the same reader can be used in different applications. Ticketing and payment transaction applications as well as electronic passports exclusively use ISO/IEC 144443 as transmission standards. Applications in the goods and item logistics conform with ISO/IEC 18000-6, ISO/IEC 180000-3 or ISO/IEC 15693. Reader reusability in different applications and the demand for large numbers of readers finally resulted in the development of highly integrated single-chip reader ICs that enable a fast and cost-efficient development and production of readers. Section 11.3.2 presents an example of a single-chip reader IC and an application example.

## *11.3.1 Integrated RF Interface*

We will describe Atmel's *U2270B* as an example of a fully integrated RF interface in the frequency range of 125 kHz.

The IC contains the following modules: *on-chip oscillator, driver, received signal conditioning* and an integral power supply.

The on-chip oscillator generates the operating frequency in the range 100–150 kHz. The precise frequency is adjusted by an external resistor at pin $R_F$. The downstream driver generates the power

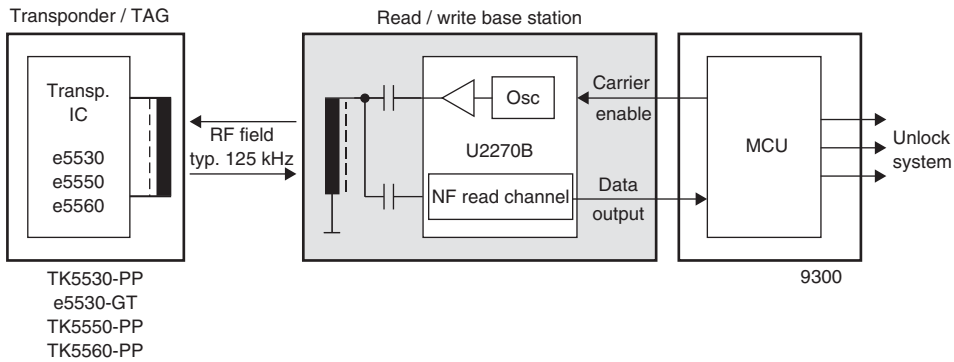


**Figure 11.11** The integrated RF interface U2270B basically represents a highly integrated RF interface. The control unit is realised in an external microprocessor (MCU) (reproduced by permission of TEMIC Semiconductor GmbH, Heilbronn)

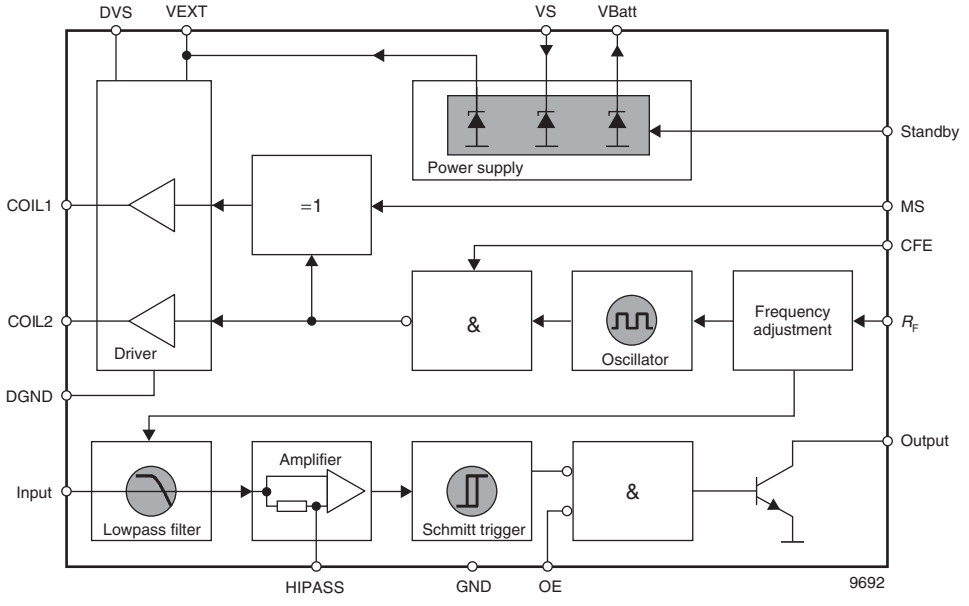


**Figure 11.12** Block diagram of the reader IC U2270B. The transmitter arm consists of an oscillator and driver to supply the antenna coil. The receiver arm consists of filter, amplifier and a Schmitt trigger (reproduced by permission of TEMIC Semiconductor GmbH, Heilbronn)

required to control the antenna coil as push–pull output. If necessary, a baseband modulation signal can be fed into pin CFE as a TTL signal and this switches the RF signal on or off, generating an ASK modulation ASK 100%).

The *load modulation* procedure in the transponder generates a weak amplitude modulation of the reader's antenna voltage. The modulation in the transponder occurs in the baseband, i.e. without the use of a subcarrier. The transponder modulation signal can be reclaimed simply by demodulating the antenna voltage at the reader, using a diode. The signal, which has been rectified by an external diode and smoothed using an RC low-pass filter, is fed into the 'input' pin of the U2270B (Figure 11.13). Using a downstream Butterworth low-pass filter, an amplifier module and a Schmitt trigger, the demodulated signal is converted into a TTL signal, which can be evaluated by the downstream microprocessor. The time constants of the Butterworth filter are designed so that a Manchester or bi-phase code can be processed up to a data rate of $f_{osc}/25$ (approximately 4.8 bit/s, TEMIC, 1977).

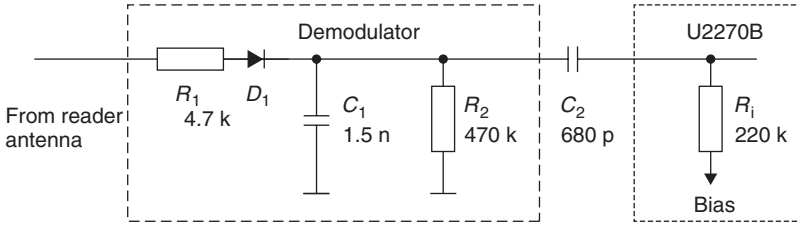


**Figure 11.13** Rectification of the amplitude modulated voltage at the antenna coil of the reader (reproduced by permission of TEMIC Semiconductor GmbH, Heilbronn)

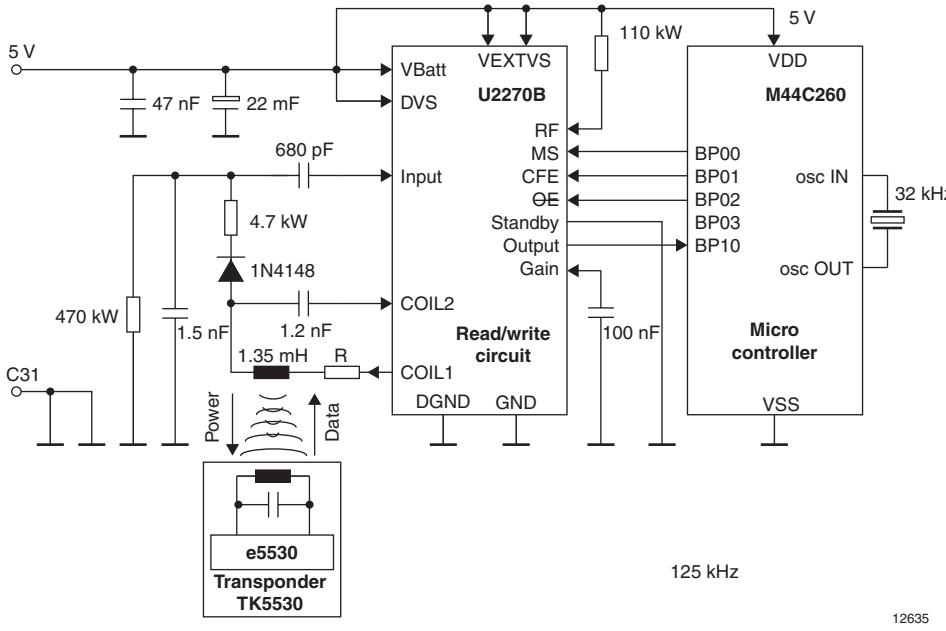


**Figure 11.14** Complete application example of a low-cost reader IC U2270B (reproduced by permission of TEMIC Semiconductor GmbH, Heilbronn)

Figure 11.14 shows a complete application circuit for the U2270B. A microprocessor generates the digital baseband signal that is required for modulating the transmitter in the U2270B. The processor compiles the data to be transmitted in a protocol frame and applies the corresponding software to carry out a bitwise data encoding. Entering the serial signal at Pin CFE of the U2270B generates an ASK modulation with data pulse (also see Figure 11.10).

The U2270B exports the bitstream received by the transponder as a digital *baseband signal* to Pin OUTPUT and the microprocessor (see Figure 11.10). The microprocessor uses software to decode the baseband signal and re-compiles individual bits into a protocol frame that also contains payload data.

## *11.3.2 Single-Chip Reader IC*

RFID standards in the frequency range 13.56 MHz (for example ISO/IEC 14443, ISO/IEC 15693 or ISO/IEC 18000-3) have high bitrates (up to 848 kBit/s), *anticollision algorithms* and complex protocol frames for data transmission. A complete encoding and decoding of baseband signals and protocol frames in a reader's microprocessor would result in an expensive and fault-prone software development and high demands on the microprocessor's processing speed. In order to facilitate the reader development there is a large number of highly integrated s*ingle-chip reader ICs* on the market.

Single-chip reader ICs encode and decode the signals to be sent and received and automatically generate the protocol frame. They can also calculate checksums (CRC), detect transmission errors and partially control the data stream.

NXP Semiconductors' MFRC-522 is an example of such a single-chip reader IC) (MFRC522, 2007). Figure 11.15 shows the block diagram of an RC-522. This component supports the communication with both ISO/IEC 14443-A transponders and the *MIFARE* transponders.

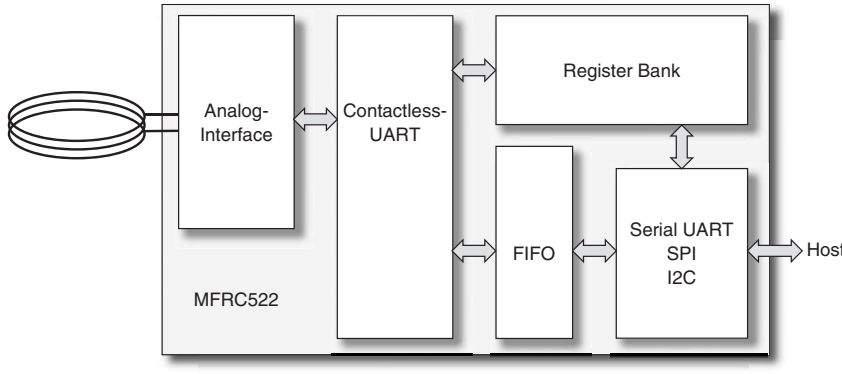


**Figure 11.15** Block diagram of single-chip reader IC MFRC-522

RC-522 has an analogous circuit, a contactless UART, a FIFO buffer, a job control (status and control) as well as a host interface for connecting the component to a microprocessor. The buffered output driver of RC-522 enables the direct connection of the sending and receiving antenna without an additional active power amplifier. Only few additional passive components for antenna adaption are required. The analogous circuit completely takes over the demodulation and decoding of the data re-sent by the transponder. The contactless UART generates the protocol frames according to ISO/IEC 14443-A, or the proprietory MIFARE specification. Also the corresponding error detection (parity and CRC) in the received protocol frames occurs in the contactless UART. The FIFO buffer allows sending and receiving data blocks of a maximum of 64 bBytes in one block. *Chaining* can be used to segment and sequentially transmit larger data blocks.

A large number of *registers* that can be accessed by the connected microprocessor for read and write operations is used for *programming* RC-522 as well as for reading and writing data to the module. Table 11.2 presents a selection of the most important registers of the module. Using registers makes prompting RC-522 significantly easier. This way, multiple write and read operations of FIFO register FIFODataReg is used to write the data blocks to be sent to the module's FIFO. Data received by the transponder can be easily read out of the module if the same register is read out several times. By reading out different registers it it possible, for instance, to detect CRC or parity errors occurring during data reception. Further registers are used to set desired RF interface parameters, such as *bitrate* and *pulse width*, or to generally retrieve the status of RC-522.

The register itself can be accessed through three available interfaces: the $I^2C$ or RS232 interface or via an SPI (serial peripheral interface). Programming register access is quite simple as Listing 11.1 shows for the example of the $I^2C$ interface.

Figure 11.16 shows a simple application example of a RC-522. Based on this application, Figure 11.17 shows the diagram of a fully operational reader. The *block diagram* of this reader in Figure 11.18 shows important functional components of this device[1].

In addition to RC-522 (IC4), the circuit consists of an 8051 compatible microprocessor (IC3) and a USB/RS232 interface module (IC1). The microprocessor has a 16 kByte flash and can be easily programmed with any 8051 compiler. The USB/RS232 interface module FT232R facilitates communication with PCs.

[1] The reader presented was published by Gerhard Schalk (NXP Semiconductors) in Elektor 09/2006 (Schalk, 2006). Material reproduced by permission of Elektor international media B.V. (http://elektor.de)

**Table 11.2** Selected control registers of MFRC522

| Page address | Register name | Function |
|---|---|---|
| 0.7 | Status1Reg | Contains status bits for communication |
| 0.8 | Status2Reg | Contains status bits of the receiver and transmitter |
| 0.9 | FIFODataReg | In- and output of the 64-byte FIFO buffer |
| 0.A | FIFOLevelReg | Indicates the number of bytes stored in the FIFO |
| 0.B | WaterLevelReg | Defines the level for FIFO under- and overflow warning |
| 0.C | ControlReg | Contains miscellaneous control registers |
| 0.D | BitFramingReg | Adjustments for bit-oriented frames |
| 0.E | CollReg | Bit position of the first bit collision detected on the RF interface |
| 1.1 | ModeReg | Defines general modes for transmitting and receiving |
| 1.2 | TXModeReg | Defines the transmission data rate and framing |
| 1.3 | RXMode Reg | Defines the receive data rate and framing |
| 1.4 | TXControlReg | Controls the logical behaviour of the antenna driver pins TX1, TX2 |
| 1.5 | TXASKReg | Controls the setting of the TX modulation |
| 1.6 | TXSelReg | Selects the internal sources for the antenna driver |
| 1.7 | RXSelReg | Selects internal receiver settings |
| 1.8 | RXThresholdReg | Selects thresholds for the bit decoder |
| 1.9 | DemodReg | Defines modulator settings |
| 2.1 | CRCResultReg | Shows the actual MSB and LSB values of the CRC calculation |
| 2.4 | ModWidthReg | Controls the setting of the ModWidth |
| 2.6 | RFCfgReg | Controls the receiver gain |
| 2.7 | GsNReg | Selects the conductance of the antenna driver pins for modulaltion |

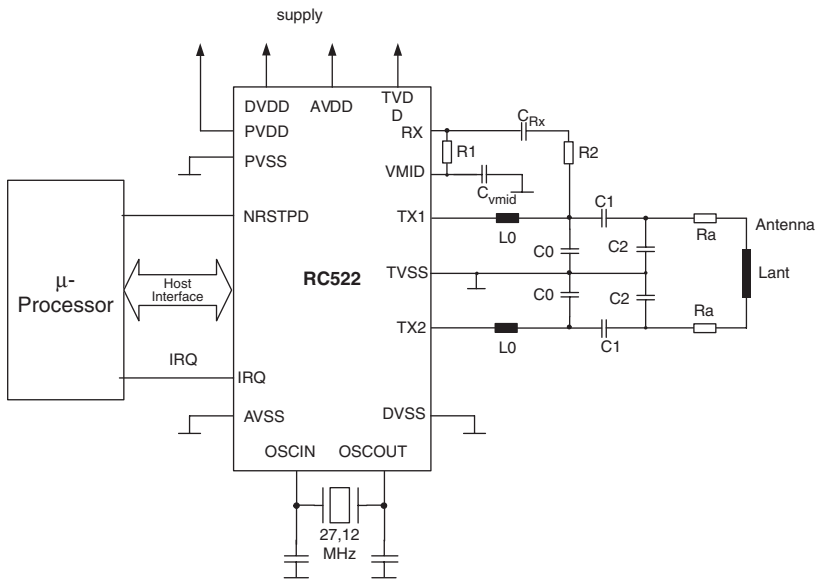


**Figure 11.16** Simple application example of RC-522 (reproduced by permission of NXP Semiconductors)

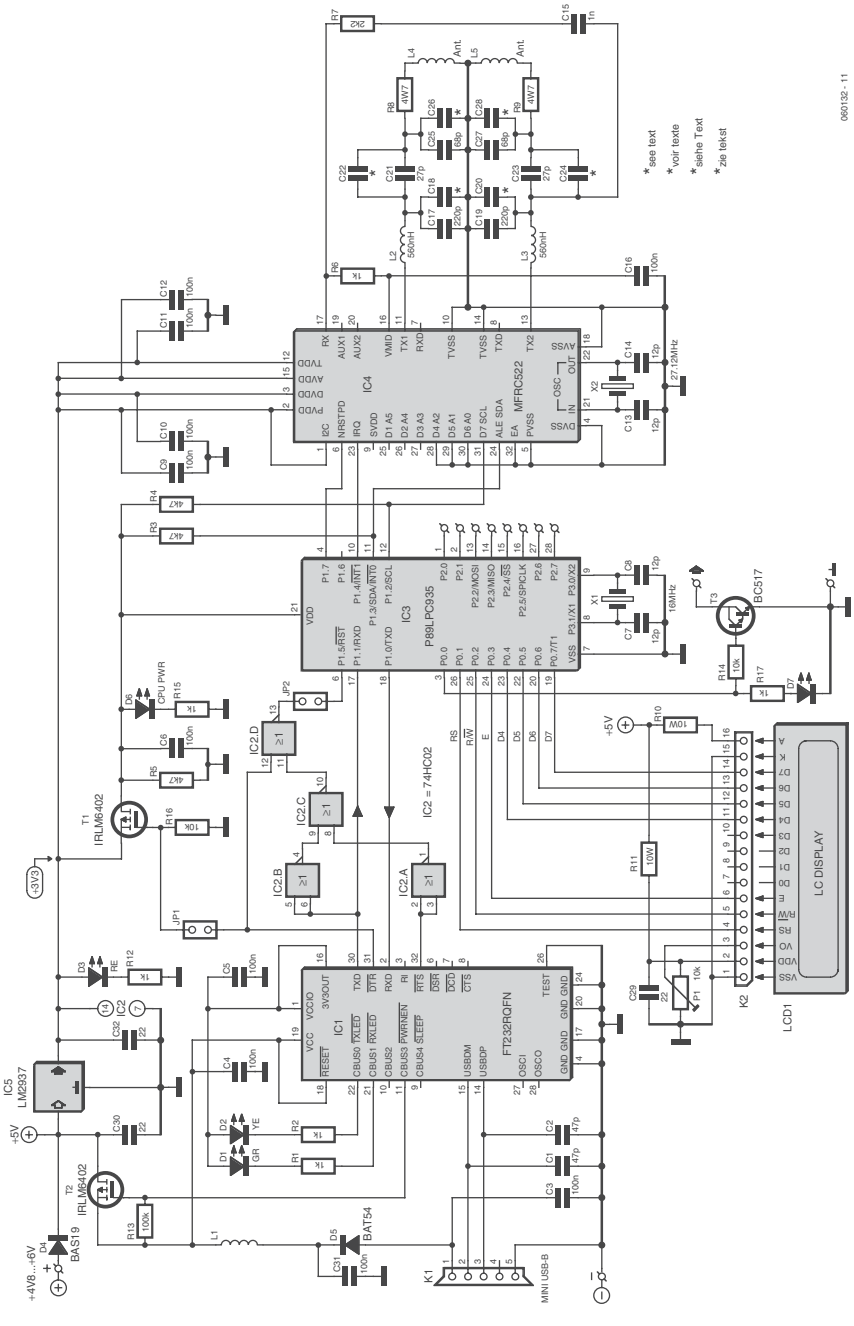


**Figure 11.17** Example of an RFID reader circuit (reproduced by permission of Elektor, http://www.elektor.de)

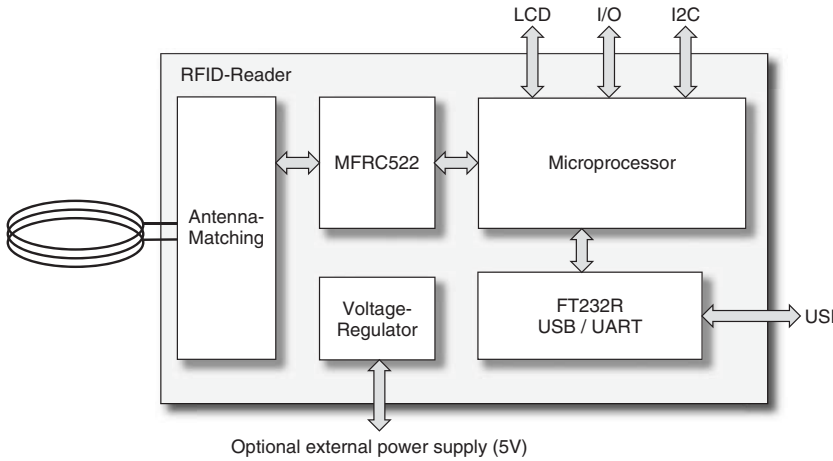


**Figure 11.18** Block diagram of a complete RFID reader for 13.56 MHz, based on Figure 11.17

The stand-alone operation of the circuit requires only a power-supply unit with 300 mA current for an output voltage of 5 V DC. If the circuit is operated at a USB port of a PC, no external voltage supply is necessary. The reader is operated as a bus-powered device and, as such a high-power device, it can tolerate up to 500 mA after the successful USB-bus enumeration. In order to prevent an early connection of the reader, signal PWREN of the USB interface module switches transistor T2 to conductive only after the successful enumeration. Subsequently also RC-522 and the microprocessor are supplied with operating voltage (Schalk, 2006).

The microprocessor only needs two cycles per command and is clocked with 16 MHz. This speed and the 16 kByte flash memory are sufficient for a variety of reader applications. If necessary, an LCD display can be connected to I/O port P0. Due to the vacant I/O port P2 as well as the microprocessor's available I2C and SPI interfaces, additional hardware modules can be easily connected.

The reader's layout and component diagram can be found in the book's appendix (see Section 14.4.3). A complete circuit board and software for the microprocessor – and even for an installation on the PC – can be ordered via the Internet.

## 11.4 Connection of Antennas for Inductive Systems

Reader antennas in inductively coupled RFID systems generate magnetic flux $\Phi$, which is used for the power supply of the transponder and for sending messages between the reader and the transponder. This gives rise to three fundamental design requirements for a reader antenna:

- maximum current $i_1$ in the *antenna coil*, for maximum magnetic flux $\Phi$;
- power matching so that the maximum available energy can be used for the generation of the magnetic flux;
- sufficient bandwidth for the undistorted transmission of a carrier signal modulated with data.

Depending upon the frequency range, different procedures can be used to connect the antenna coil to the transmitter output of the reader: direct connection of the antenna coil to the power output module using power matching, or the supply of the antenna coil via coaxial cable.

**Listing 11.1** Example code for read and write operations of a control register via the I2C interface of RC-522

```
/**************************************************
Function:       RcSetReg
Description:
     Write data to register of RC522
Parameter:
     RegAddr       The address of the regitster
     RegVal        The value to be writen
Return:
     None
**************************************************/
void RcSetReg(unsigned char RegAddr, unsigned char RegVal)
{
   unsigned char data ackValueRD;

   i2c_Start();
   ackValueRD = i2c_MasterTransmit(MFRC522_I2C_WRAdr);
   ackValueRD = i2c_MasterTransmit(RegAddr & 0x3F);
   ackValueRD = i2c_MasterTransmit(RegVal);
   i2c_Stop();
}

/**************************************************
Function:       qRcGetReg
Description:
     Write data to register of RC522
Parameter:
     RegAddr       The address of the regitster to be readed
Return:
     The value of the specify register
**************************************************/
unsigned char RcGetReg(unsigned char RegAddr)
{
   unsigned char data RegVal;
   unsigned char data ackValueRD;

   i2c_Start();
   ackValueRD = i2c_MasterTransmit(MFRC522_I2C_WRAdr);
   ackValueRD = i2c_MasterTransmit(RegAddr & 0x3F);
   if(ackValueRD)
   i2c_Stop();

   i2c_Start();
   ackValueRD = i2c_MasterTransmit(MFRC522_I2C_RDAdr);
   RegVal = i2c_MasterReceive (NACK);
   i2c_Stop();

   return RegVal;
}
```

## 11.4.1 Connection Using Current Matching

In typical low-cost readers in the frequency range below 135 kHz, the RF interface and antenna coil are mounted close together (a few centimetres apart), often on a single printed circuit board. Because the geometric dimensions of the antenna supply line and antenna are smaller than the wavelength of the generated RF current (2200 m) by powers of ten, the signals may be treated as stationary for simplification. This means that the wave characteristics of a high-frequency current may be disregarded. The connection of an antenna coil is thus comparable to the connection of a loudspeaker to an NF output module from the point of view of circuitry.

The reader IC U2270B, which was described in the preceding section, can serve as an example of such a low-cost reader.

Figure 11.19 shows an example of an antenna circuit. The antenna is fed by the push–pull bridge output of the reader IC. In order to maximise the current through the antenna coil, a *serial resonant circuit* is created by the serial connection of the antenna coil $L_S$ to a capacitor $C_S$ and a resistor $R_S$. Coil and capacitor are dimensioned such that the resonant frequency $f_0$ is as follows at the operating frequency of the reader:

$$f_0 = \frac{1}{2\pi\sqrt{L_s \cdot C_s}} \tag{11.3}$$

The coil current is then determined exclusively by the series resistor $R_S$.

## 11.4.2 Supply via Coaxial Cable

At frequencies above 1 MHz, or in the frequency range 135 kHz if longer cables are used, the RF voltage can no longer be considered stationary, but must be treated as an *electromagnetic wave* in the cable. Connecting the antenna coil using a long, unshielded two-core wire in the RF range would therefore lead to undesired effects, such as power reflections, impedance transformation and parasitic power emissions, due to the wave nature of a RF voltage. Because these effects are difficult to control when they are not exploited intentionally, shielded cable – so-called *coaxial cable* – is

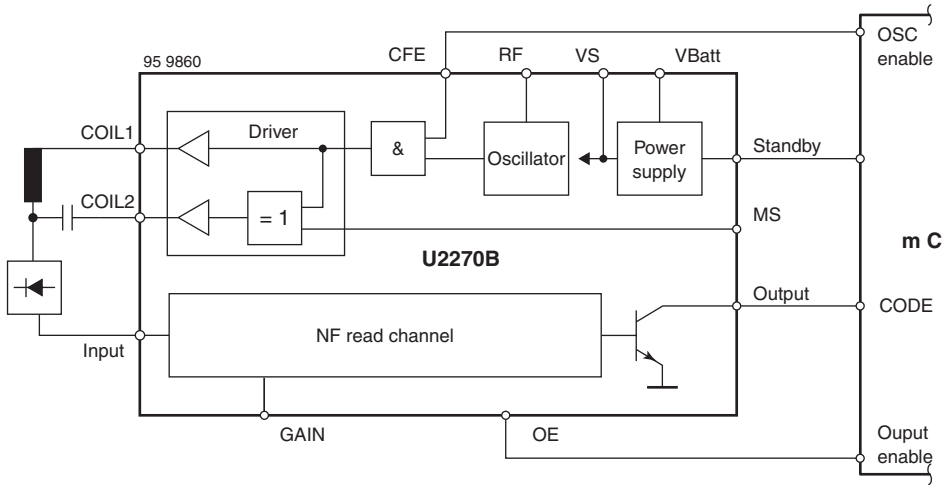


**Figure 11.19** Block diagram for the reader IC U2270B with connected antenna coil at the push–pull output (reproduced by permission of TEMIC Semiconductor GmbH, Heilbronn)

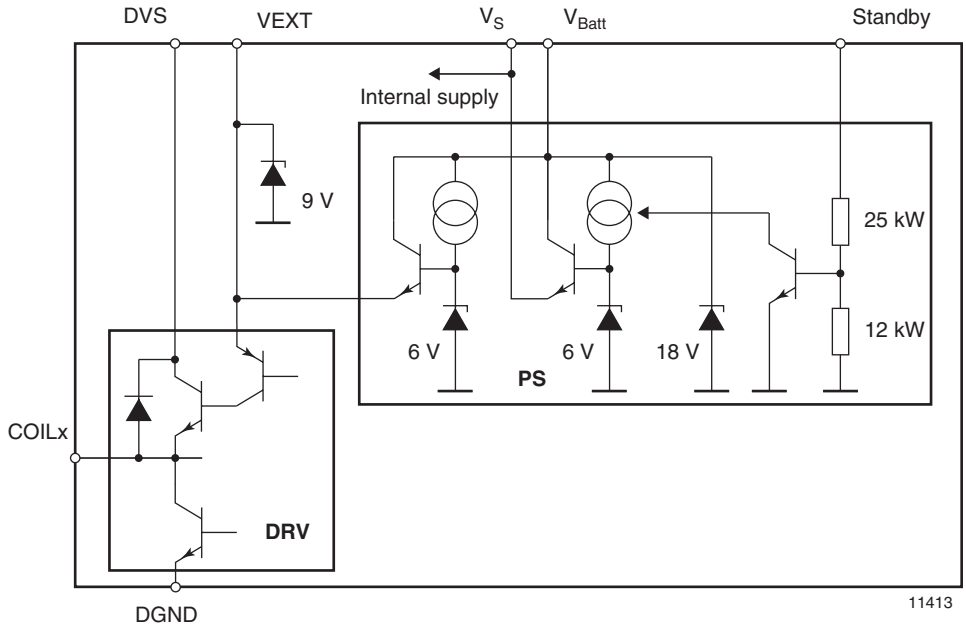


**Figure 11.20** Driver circuit in the reader IC UU2270B (reproduced by permission of TEMIC Semiconductor GmbH, Heilbronn)

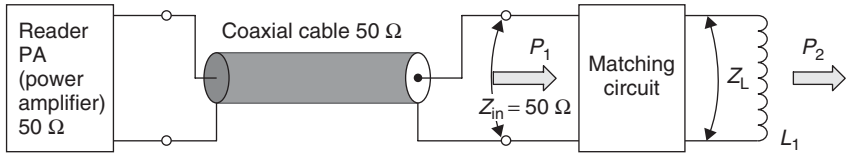


**Figure 11.21** Connection of an antenna coil using 50 Ω technology

normally used in radio technology. Sockets, plugs and coaxial cable are uniformly designed for a cable impedance of 50 Ω and, being a mass produced product, are correspondingly cheap. RFID systems generally use 50 Ω components.

The block diagram of an inductively coupled RFID system using 50 Ω technology shows the most important RF components.

The antenna coil $L_1$ represents an impedance $Z_L$ in the operating frequency range of the RFID system. To achieve power matching with the 50 Ω system, this impedance must be transformed to 50 Ω (matched) by a passive *matching circuit*. Power transmission from the reader output module to the matching circuit is achieved (almost) without losses or undesired radiation by means of a coaxial cable.

A suitable matching circuit can be realised using just a few components. The circuit illustrated in Figure 11.22, which can be constructed using just two capacitors, is very simple to design (Suckrow, 1997). This circuit is used in practice in various 13.56 MHz RFID systems.

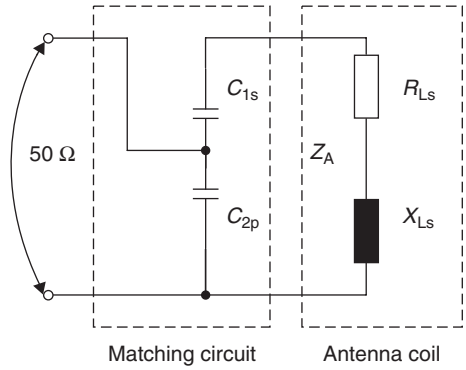


**Figure 11.22** Simple matching circuit for an antenna coil

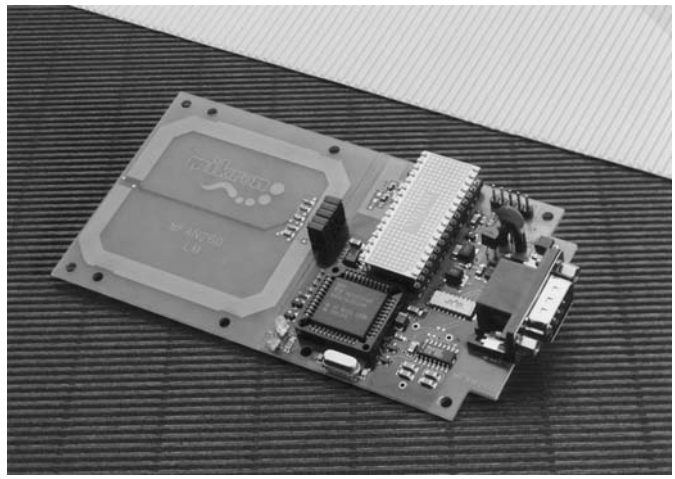

**Figure 11.23** Reader with integral antenna and matching circuit (MIFARE®-reader, reproduced by permission of Philips Electronics N.V.)

Figure 11.23 shows a reader with an integral antenna for a 13.56 MHz system. Coaxial cable has not been used here, because a very short supply line can be realised by a suitable layout (stripline). The matching circuit is clearly visible on the inside of the antenna coil (SMD component).

Before we can dimension the circuit, we first need to determine the impedance $Z_A$ of the antenna coil for the operating frequency by measurement. It is clear that the impedance of a real antenna coil is generated by the serial connection of the coil inductance $L_S$ with the ohmic wire resistance $RL_S$ of the wire. The serial connection from $XL_S$ and $RL_S$ can also be represented in the impedance level.

The function of the matching circuit is the transformation of the complex coil impedance $Z_A$ to a value of 50 Ω real. A reactance (capacitance, inductance) in series with the coil impedance $Z_A$ shifts the total impedance $Z$ in the direction of the $jX$ axis, while a parallel reactance shifts the total impedance away from the origin in a circular path.

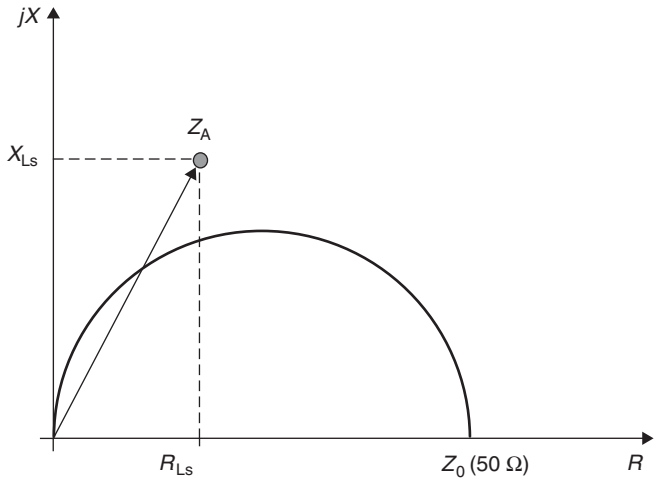


**Figure 11.24** Representation of $Z_A$ in the impedance level ($Z$ plane)

The values of $C_{2p}$ and $C_{2s}$ are dimensioned such that the resulting coil impedance $Z_A$ is transformed to the values desired to achieve 50 Ω.

The matching circuit from Figure 11.18 can be mathematically represented by Equation (11.4):

$$Z_0 = 50\,\Omega = \frac{1}{-j\omega C_{2p} + \left( \dfrac{1}{\dfrac{1}{-j\omega C_{1s}} + R_{Ls} + j\omega L_s} \right)} \tag{11.4}$$

From the relationship between resistance and conductance in the complex impedance plane (Z-level), we find the following relationship for $C_{2p}$:

$$C_{2p} = \sqrt{\frac{Z_0 \cdot R_{Ls} - R_{Ls}^2}{\omega Z_0 R_{LS}}} \tag{11.5}$$

As is clear from the impedance plane in Figure 11.25, $C_{2p}$ is determined exclusively by the series resistance $R_{ls}$ of the antenna coil. For a series resistance $R_{LS}$ of precisely 50 Ω, $C_{2p}$ can be dispensed with altogether; however greater values for $R_{ls}$ are not permissible, otherwise a different matching circuit should be selected (Fricke *et al.*, 1979).

We further find for $C_{1s}$:

$$C_{1s} = \frac{1}{\omega^2 \cdot \left( L_s - \dfrac{\sqrt{Z_0 R_{LS} - R_{LS}^2}}{\omega} \right)} \tag{11.6}$$

The antenna current $i_{LS}$ is of interest in this context, because this allows us to calculate the magnetic field strength $H$ that is generated by the antenna coil (see Chapter 4).

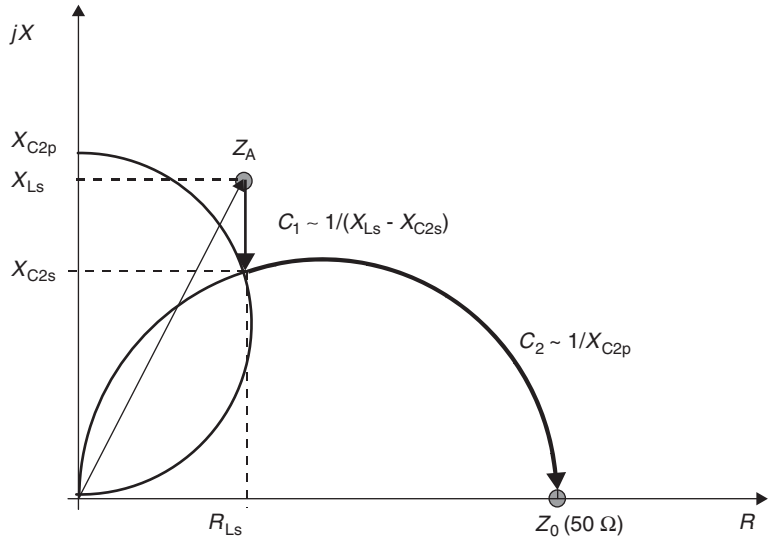


**Figure 11.25** Transformation path with $C_{ls}$ and $C_{2p}$

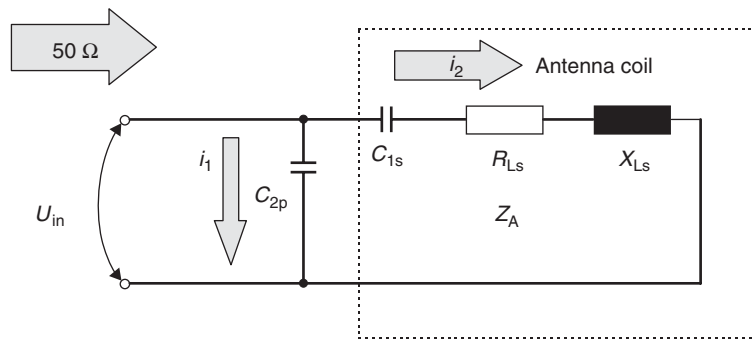


**Figure 11.26** The matching circuit represented as a current divider

To clarify the relationships, let us now modify the matching circuit from Figure 11.22 slightly.

The input impedance of the circuit at operating frequency is precisely 50 Ω. For this case, and only for this case(!), the voltage at the input of the matching circuit is very simple to calculate. Given a known transmitter output power $P$ and known input impedance $Z_0$, the following is true: $P = U^2/Z_0$. The voltage calculated from this equation is the voltage at $C_{2p}$ and the series connection of $C_{ls}$, $R_{ls}$ and $X_{LS}$, and is thus known. The antenna current $i_2$ can be calculated using the following equation:

$$i_2 = \frac{\sqrt{P \cdot Z_0}}{R_{Ls} + j\omega L_s - j\dfrac{1}{\omega C_{1s}}} \tag{11.7}$$

### 11.4.3 The Influence of the Q Factor

A reader antenna for an inductively coupled RFID system is characterised by its resonant frequency and by its *Q factor*. A high $Q$ factor leads to high current in the antenna coil and thus improves the power transmission to the transponder. In contrast, the transmission bandwidth of the antenna is inversely proportional to the $Q$ factor. A low bandwidth, caused by an excessively high $Q$ factor, can therefore significantly reduce the modulation sideband received from the transponder.

The $Q$ factor of an inductive reader antenna can be calculated from the ratio of the inductive coil resistance to the ohmic loss resistance and/or series resistance of the coil:

$$Q = \frac{2\pi \cdot f_0 \cdot L_{\text{coil}}}{R_{\text{total}}} \tag{11.8}$$

The bandwidth of the antenna can be simply calculated from the $Q$ factor:

$$B = \frac{f_0}{Q} \tag{11.9}$$

The required bandwidth is derived from the bandwidth of the modulation sidebands of the reader and the load modulation products (if no other procedure is used). As a rule of thumb, the following can be taken as the bandwidth of an ASK modulated system.

$$B \cdot T = 1 \tag{11.10}$$

where $T$ is the turn-on time of the carrier signal, where modulation is used.

For many systems, the optimal $Q$ factor is 10–30. However, it is impossible to generalise here because, as already mentioned, the $Q$ factor depends upon the required bandwidth and thus upon the modulation procedure used (e.g. coding, modulation, subcarrier frequency).

## 11.5 Reader Designs

Different types and designs of readers are available for different applications. Readers can be generally classified into OEM readers, readers for industrial or portable use and numerous special designs.

### 11.5.1 OEM Readers

OEM readers are available for integration into customers' own data capture systems, BDE terminals, access control systems, till systems, robots, etc. OEM readers are supplied in a shielded tin housing or as an unhoused board. Electrical connections are in the form of soldered, plug and socket or screw-on terminals.

### 11.5.2 Readers for Industrial Use

Industrial readers are available for use in assembly and manufacturing plant. These usually have a standardised field bus interface for simple integration into existing systems. In addition, these readers fulfil various protection types and explosion protected readers (EX) are also available.

### 11.5.3 Portable Readers

Portable readers are used for the identification of animals, as a control device in public transport, as a terminal for payments, as an aid in servicing and testing, and in the commissioning of systems.

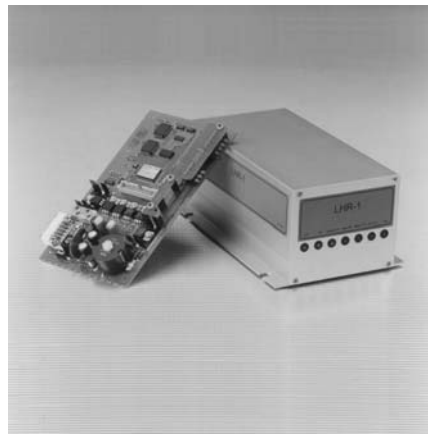


**Figure 11.27** Example of an OEM reader for use in terminals or robots (photo: long-range/high-speed reader LHRI, reproduced by permission of SCEMTEC Transponder Technology GmbH, Reichshof-Wehnrath)

**Table 11.3** Typical technical data of OEM readers

| | |
|---|---|
| Supply voltage | Typically 12 V |
| Antenna | External |
| Antenna connection | BNC box, terminal screw or soldered connection |
| Communication interface | RS232, RS485 |
| Communication protocol | X-ON/X-OFF, 3964, ASCII |
| Environmental temperature | 0–50 °C |

**Table 11.4** Typical technical data of industrial readers

| | |
|---|---|
| Supply voltage | Typically 24 V |
| Antenna | External |
| Antenna terminal | BNC socket or terminal screw |
| Communication interface | RS485, RS422 |
| Communication protocol | 3964, InterBus-S, Profibus, etc. |
| Ambient temperature | −25 to +80 °C |
| Protection types, tests | IP 54, IP 67, VDE |

Portable readers have an LCD display and a keypad for operation or entering data. An optional RS232-interface is usually provided for data exchange between the portable readers and a PC.

In addition to the extremely simple devices for system evaluation in the laboratory, particularly robust and splash-proof devices (IP 54) are available for use in harsh industrial environments.

## 11.6 Near-Field Communication

NFC (near-field communication) is a wireless communication technology in the frequency range of 13.56 MHz. *NFC* can be used to transmit data between two electronic devices over a distance of up to 10 cm. NFC is compatible with existing RFID standards and makes it possible both to

**Figure 11.28** Reader for portable use in payment transactions or for service purposes (photo: LEGIC® reader reproduced by permission of Kaba Security Locking Systems AG, CH-Wetzikon)

**Table 11.5** Typical technical data of portable readers

| | |
|---|---|
| Supply voltage | Typically 6 or 9 V from batteries or accumulators |
| Antenna | Internal, or as 'sensor' |
| Antenna terminal | – |
| Communication interface | Optional RS232 |
| Ambient temperature | 0–50 °C |
| Protection types, tests | IP 54 |
| Input/output elements | LCD display, keypad |

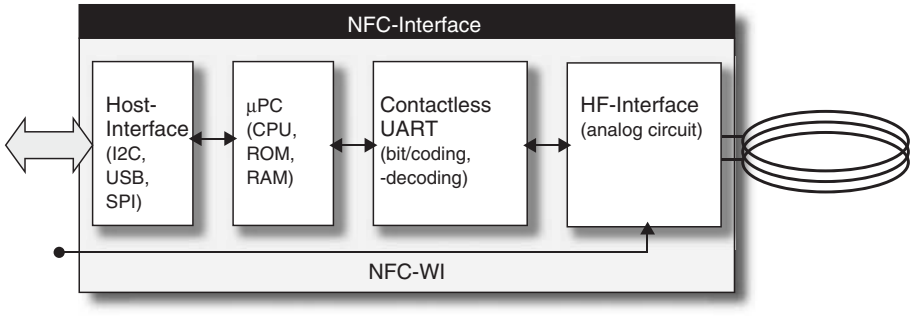


**Figure 11.29** Typical block diagram of an NFC interface (PN 511)

read transponders and to simulate transponders (see also Section 3.4). An NFC interface thus combines in one functional unit the functions of a *data transceiver*, an RFID reader and an RFID transponder, and therefore has to include all necessary components, such as transmitter, receiver and load modulator.

In order to facilitate the integration of an NFC interface into an electronic device, such as a mobile phones, the industry offers highly integrated NFC transceiver modules (NXP, 2007). The transceiver modules contain all analogous and digital modules and – similarly to RFID readers - can thus be activated with simple control commands via the host interface.

Figure 11.29 represents a typical block diagram of an NFC interface. For the active modes (reader emulation mode, peer-to-peer mode), the RF interface contains a complete transmitter, a

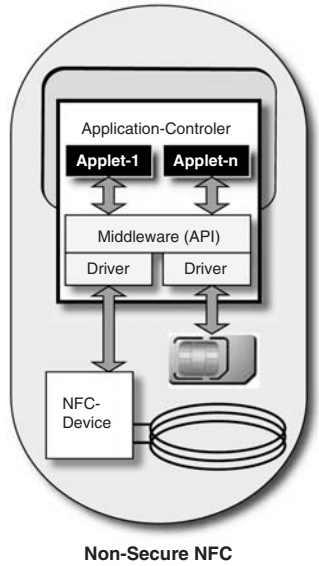


**Figure 11.30** For nonsecure NFC applications, the NFC application (applet) is directly executed in the memory of the mobile's application controller

receiver for 13.56 MHz and another receiver for load modulation signals with a modulated 848 kHz subcarrier (according to ISO/IEC 14443). For the passive mode (card emulation mode), the RF interface also includes a *load modulator*.

In the contactless UART (universal asynchronous receiver transmitter), the data are encoded or decoded into the corresponding signal forms required for the contactless transmission, such as Manchester encoding.

The *communication protocol* between NFC interface and other RFID components (reader, transponder or a second NFC interface) is completely processed in the microprocessor (μPC). The host control only provides the application data to be transmitted and the control commands. The *application software* itsself is stored and executed in the working memory of the electronic device the NFC device is integrated into. For mobile phones, usually a Java applet realizes the application software. In its *middleware*, the application controller (also baseband controller) of the phone provides the corresponding APIs (application programmer interface) for Java programming which can be used to access from a Java applet all the phone's components, such as display, keyboard, GPRS interface, (U)SIM and also the NFC interface. This kind of application programming is very common and widely used for games and applications, such as calendars, routing or blogging clients.

It is very easy to upload new applications via an GSM interface, which today is common practice for games. This way it is also easy to easily install a large variety of NFC applications.

## *11.6.1 Secure NFC*

Saving and executing *Java Applets* in the memory of the mobile's application controller unfortunately also means that the Java applets are not protected against unintentional deletion or the

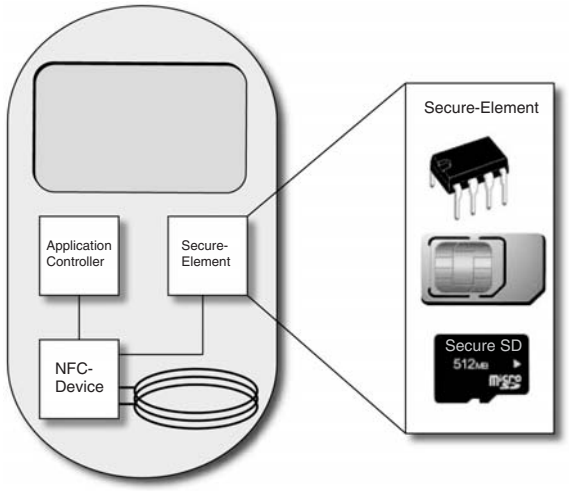


**Figure 11.31** An NFC secure element can be designed as a directly soldered smart card chip, a secure memory chip or as the SIM card of a mobile phone

(intentional) manipulation of the data saved in the memory. For safety-insensitive NFC applications, such as the transmission of pictures between telephones or reading and displaying smart label data on a poster, this is not an issue. Applications such as contactless payment transactions, e.g. the contactless *creditcard function*, with NFC, or for contactless tickets, are a different story. Here, the unintended change or deletion of data contents can result in the irrecoverable loss of data with monetary value. In the worst case, it would even be possible to read out data in the phone's memory using malicious programmes, such as a manipulated game. The risk should not be underestimated as the read-out data could be transmitted via a GSM interface to an *attacker* who may misuse them. It is therefore strictly forbidden to realize applications for payment transactions that store credit card data in the unsecured memory range. The same applies to ticketing application with stored data sets serving as tickets.

A solution to this problem is secure NFC. Here, safety-relevant Java applets and application data are executed and saved in the memory of a s*ecure element* (SE). A large variety of modules can serve as secure element. An obvious option is using the SIM card that each GSM phone has. Other options for secure elements are s*ecure memory cards*, i.e. memory cards with an additional smart card chip, or a smart card chip directly soldered into the phone.

Figure 11.31 illustrates the different options for secure NFC. All concepts have in common that they need an interface between the secure element and the NFC interface as well as between the application controller and the NFC interface. With an additional interface between the NFC interface and the application controller it is possible to exclusively use secure element and NFC interface for secure NFC transactions, such as ticket verification at a hub. The corresponding applet of the application runs in the secure element, i.e. in a secure and trustworthy hardware environment. The data transmitted via the contactless interface are directly forwarded by the NFC interface to the secure element and vice versa. The application controller, i.e. the nonsecure part of the system, is no longer involved in the transaction.

A Java applet in the phone's application controller assigned to the application serves exclusively for administrative purposes. For ticketing applications it seems to be feasible that a Java applet is used for displaying a list with already debited journeys or the residual value of a prepaid ticket

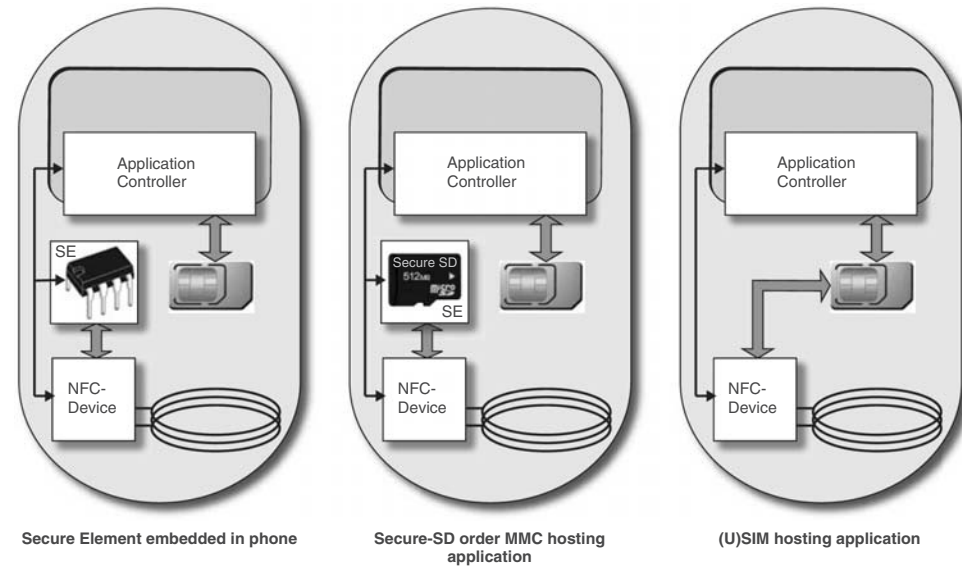


**Figure 11.32** The different design approaches for secure NFC

for multiple journeys. However, it is never possible to carry out actions that are not supported by the application's applet in the secure element. Therefore applets and data sets that are saved in the secure elements cannot be simply read out in order to copy them to another phone. This way, it is ensured that safety-relevant applications or data cannot be manually deleted by accident or attacked, or even copied with spyware.

There is a variety of technical options for designing the interface between the secure element and the NFC interface (GSM Association, 2007). The most promising ones are SWP (single wire protocol) and NFC-WI (wired interface, also known as $S^2C$ interface).

#### 11.6.1.1 Single Wire Protocol

The s*ingle wire protocol* consists of a single-wire transmission line for connecting an NFC interface (CLF, contactless front end) as master and a secure element as slave. ETSI SCP in *TS 102 613* standardised and adopted this NFC interface (Mohrs, 2008). The single wire protocol is mainly intended as secure element for (U)SIM cards in mobile phones as there is only one contact of the standard eight SIM contacts available for this function. The remaining seven contacts are already allocated to other functions.

The data to be transmitted are represented by the binary states of voltage (S1) and current (S2) on the single wire. The data transmission from NFC interface to secure element is carried out by modulating signal S1 through modulation of voltage $U_{CL}$ between the states Logic-1 and Logic-0. In the reversed direction, the data are transmitted by modulating signal S2 through modulating current $I_{CL}$ between states Logic-1 and Logic-0. The process of modulating current $I_{CL}$ can also be described as 'wire-bound load modulation'. In that case, signal S1 has to be in state Logic-1 (Praca, 2006).

An *HDLC protocol* is used for controlling data transmission between the NFC interface and the secure element. The HDLC protocol (high-level data link control) is ISO standardised and is one

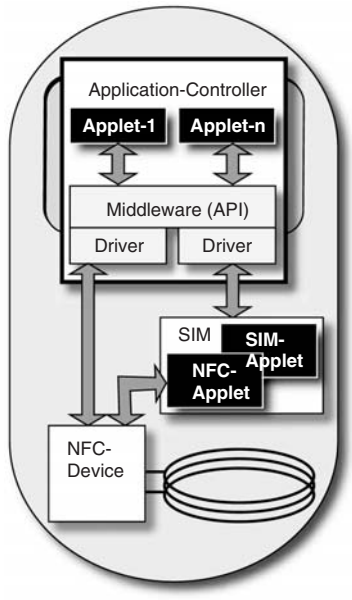


**Secure NFC (SIM as SE)**

**Figure 11.33** For secure NFC application, the NFC application (NFC applet) is realised directly in the secure element (SE)

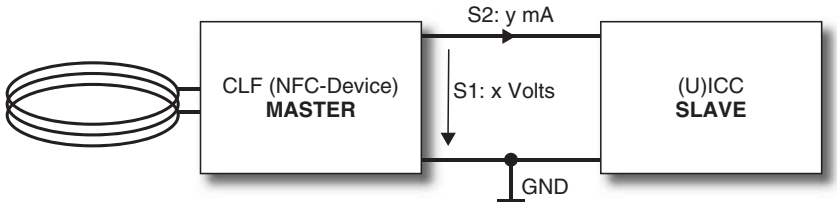


**Figure 11.34** The single wire protocol transmits signals S1 and S2 represented by the voltage and current in a single wire

of the oldest communication protocols. It implements efficient error detection and correction, sign synchronization and 'flow control'.

The protocol for the contactless data transmission between the NFC interface and another contactless device is completely processed by the NFC interface. Only application data are forwarded to the secure element via the single wire protocol. Both the protocol for contactless data transmission (ISO/IEC 18092 and ISO/IEC 14443) and a *host control interface* (HCI) for data transmission via SWP interface have to be implemented on the NFC interface. Thus the SWP interface is open to all future, new contactless transmission standards or to the expansion of existing standards and specifications of NFC interfaces.

A special case constitutes the wiring of (U)SIM cards as secure elements with an NFC interface in mobile phones. As shown in Figure 11.36, the voltage (VDD) of the (U)SIM card is not directly supplied by the phone, but via the NFC interface. This is necessary for contactless data transmission

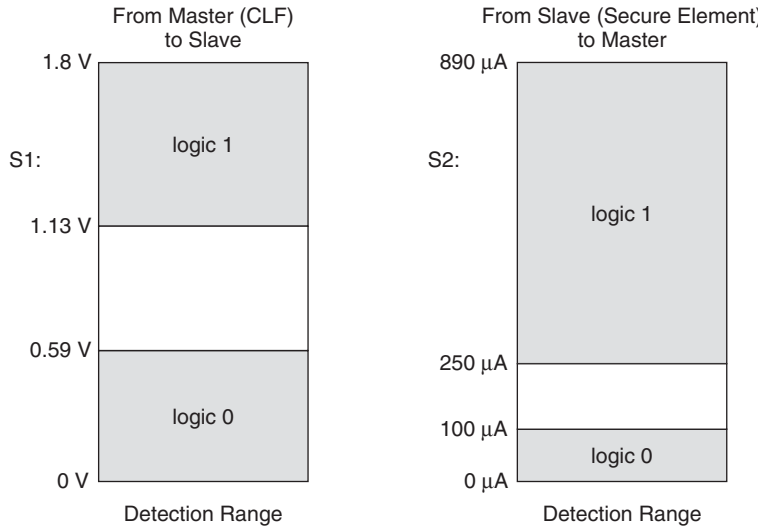


**Figure 11.35** Voltage and current ranges of the SWP interface

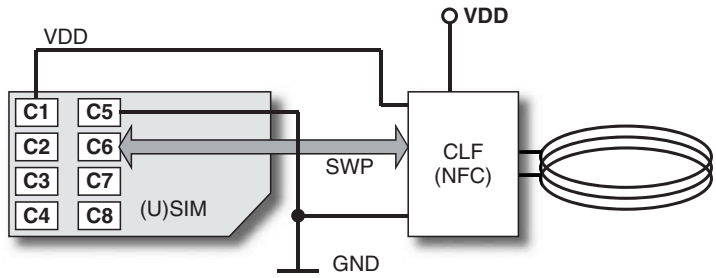


**Figure 11.36** Example of the wiring of a SIM card as secure element in an NFC interface

with secure elements, even if the battery is flat. If the NFC interface is close to an RFID reader, the reader field supplies NFC interface and secure element with power, similarly to the process used for passive transponders. This way NFC interface and secure element can, at least, be used in *card emulation mode*. Typical ticketing and payment applications using card emulation mode thus have a high operational security as the contactless functionality does not rely on the battery's charging state any longer (Praca, 2006; Mohrs, 2008).

#### 11.6.1.2 NFC Wired Interface

For *NFC wired interfaces* (NFC-WI, also called $S^2$ *C Interface*), the *secure element* is connected via two wires to the RF interface (modem) of the NFC interface (NFC front end, see Figure 11.29). Both wires *SIGIN* (signal-in) and *SIGOUT* (signal-out) transmit modulation signals between the NFC interface and the secure element that are digitally received or sent by the RF interface. The NFC interface provides the secure element only with an analogous receiver and load modulator, and

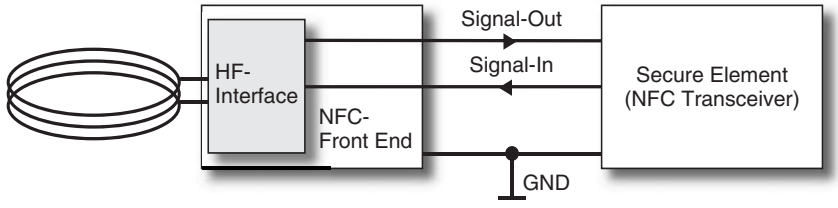


**Figure 11.37** The NFC wired interface transmits modulation signals between NFC front end and secure element

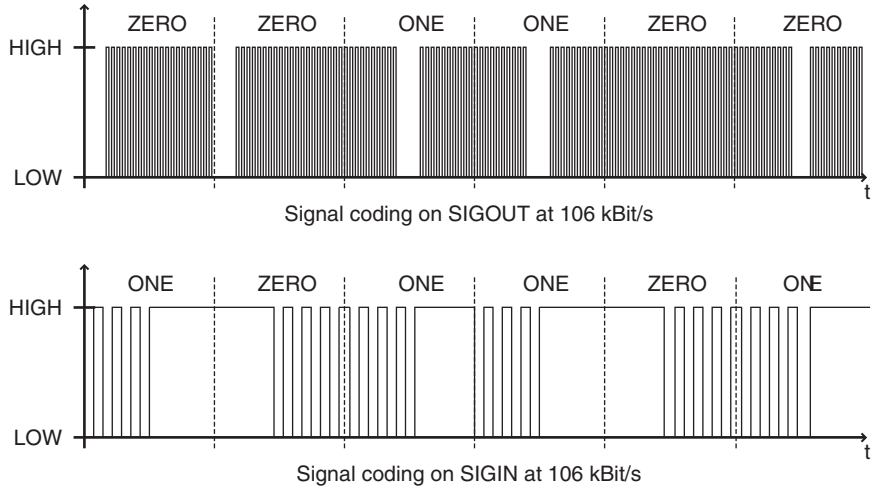


**Figure 11.38** The modulation signals of the NFC interface are transmitted on the NFC wired interface

therefore only supports operations in card emulation mode. The secure element is a dual-interface chip that has ports for the NFC-WI; it encodes and decodes the signals as well as processing the transmission protocol. Externally, the combination of secure element and NFC interface behaves like a contactless smart card. According to current NFC-WI specifications, it supports standard ISO/IEC 14443 Type A, for contactless smart cards, with different bitrates.

At the standard bitrate of 106 kBit/s, the signal SIGOUT represents an AND-link of the reader's modified Miller-encoded data with a 13.56 MHz pulse signal and contains the data stream transmitted by the reader. Figure 9.12 presents an RF signal encoded in this way.

The signal SIGIN directly activates the load modulator in the RF interface of the NFC front end. At a standard bitrate of 106 kBit/s, SIGIN represent an OR-link of the Manchester-encoded data stream of the secure element with a subcarrier signal of 848 kHz. Figures 9.12 and 9.13 represent the corresponding load-modulated RF signal.

For the higher bitrates defined in ISO/IEC 14443, 202 and 404 kBit/s, different signals are used on the NFC wired interface.

In 2006, ECMA standardized the NFC wired interface with specification ECMA-373 (ECMA, 2006).

# 12

# The Manufacture of Transponders and Contactless Smart Cards

## 12.1 Glass and Plastic Transponders

A transponder is made up of two components: the electronic data carrier and the housing. Figure 12.1 gives a simplified representation of the manufacturing process for an inductively coupled transponder.

### *12.1.1 Chip Manufacture*

In accordance with the normal semiconductor manufacturing procedure, the *microchip* is produced on a so-called *wafer*. This is a slice of silicon, which may be 6 inches (15 cm) in diameter, upon which several hundred microchips are produced simultaneously by repeated doping, exposure, etching and washing of the surface.

In the next stage of production, the microchips on the wafer are contacted using metal points and then each of the chips is individually tested for functionality. The chips have additional contact fields for this purpose, which give direct access – i.e. without going through the RF interface – to the chip's memory and security electronics. The chips are placed in so-called *test mode* during this procedure, which permits unlimited direct access to all functional groups upon the chip. The functional test can therefore be performed significantly more intensively and comprehensively than would be possible later on, when communication can only taken place via the contactless technology.

All defective chips are marked with a red ink dot at this stage, so that they can be identified and separated out in the subsequent stages of production. The test mode can also be used to programme a unique *serial number* into the chip, if the chip has an EEPROM. In read-only transponders, the serial number is programmed by cutting through predefined connecting lines on the chip using a laser beam.

After the successful completion of the test programme the test mode is deactivated by permanently breaking certain connections (so-called fuses) on the chip by a strong current surge. This stage is important to prevent unauthorised reading of data at a later date by the manipulation of the test contacts on the chip.

After the chips have been tested the wafer is sawn up using a diamond saw to give individual transponder chips. A single chip in this state is known as a *die* (plural: dice). A plastic foil is attached

*RFID Handbook: Fundamentals and Applications in Contactless Smart Cards, Radio Frequency Identification and Near-Field Communication, Third Edition.* Klaus Finkenzeller
© 2010 John Wiley & Sons, Ltd

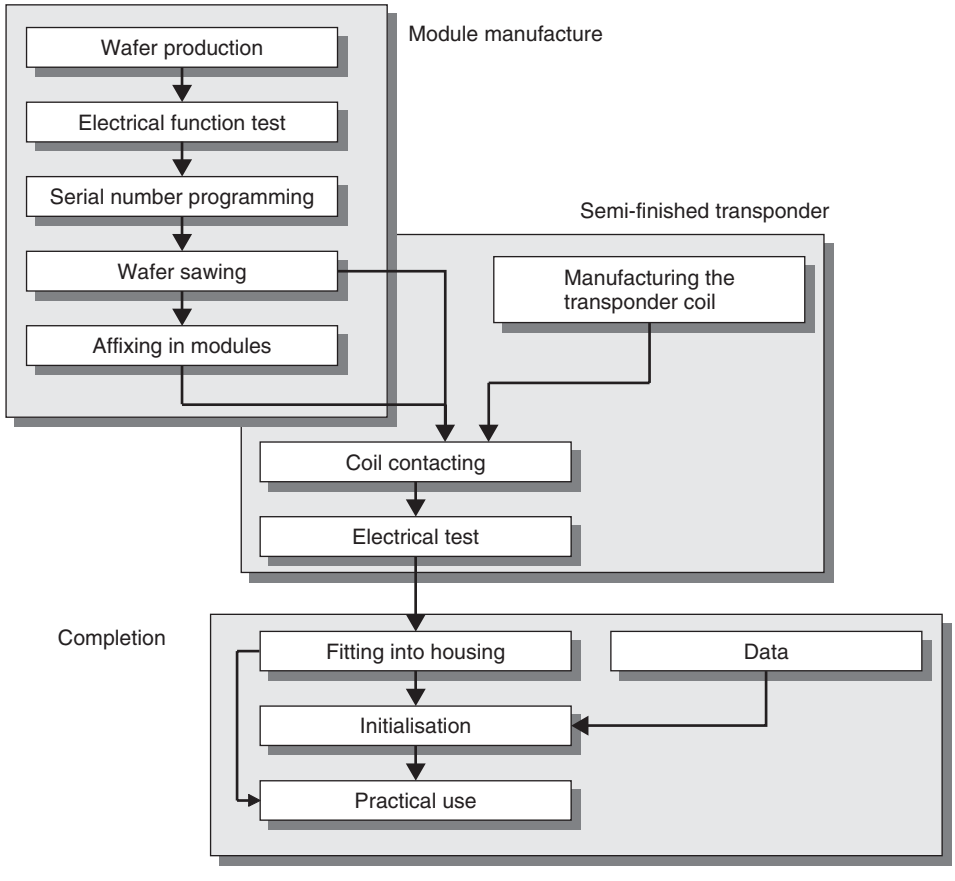


**Figure 12.1** Transponder manufacture

to the reverse of the wafer prior to the sawing operation to prevent the dice from disintegrating (*saw on foil*). After the sawing operation the dice can be removed from the plastic foil individually and fitted into a module.

Usually the dice as such are fitted into glass or plastic transponders. It is also possible to fit the dice into a *chip module*. Here the chips are put on a two-piece metal frame and the chip's two antenna connections are bonded to one part of the metal frame each. Finally, the dice and the metal frame are extrusion coated with a *moulding substance*. This significantly increases the stability of the brittle and extremely breakable silicon dice and mechanically stabilizes the two-piece metal frame. The metal frame ends sticking out of the moulding substance are used as contact surfaces. Chip modules are a common component for manufacturing contactless smart cards. (see also Figure 12.7).

## *12.1.2 Glass Transponders*

The manufacturing process of *glass transponders* starts with fitting the glass tube sections to a workpiece carrier. The glass tubes are open at the upper side and are aligned in a matrix for

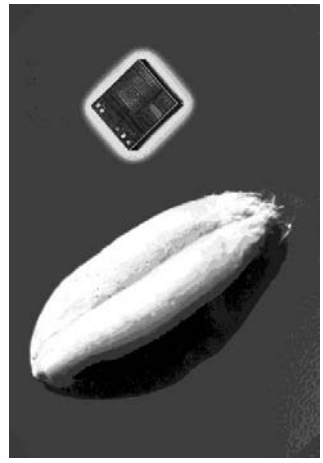

**Figure 12.2** Size comparison of a sawn die with a cereal grain. The size of a transponder chip varies between 1 and 15 $mm^2$ depending upon its function (photo: HITAG® Multimode-Chip, reproduced by permission of Philips Electronics N.V.)

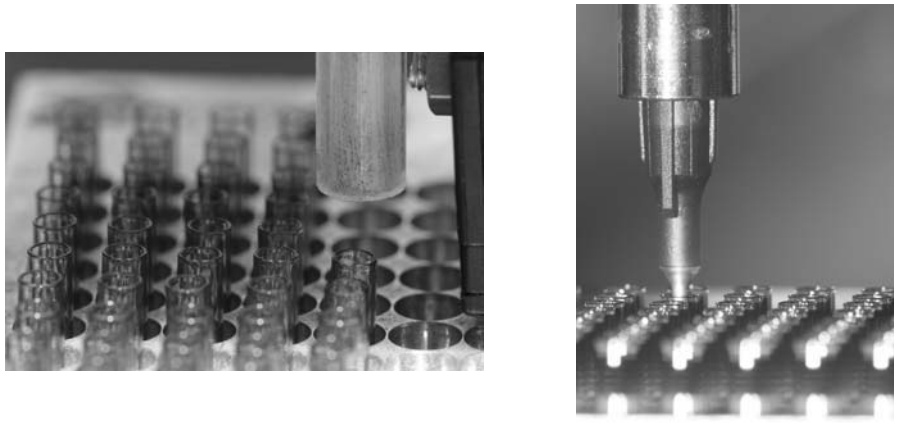

**Figure 12.3** Left: aligning glass tube sections on the workpiece carrier. Right: dosing epoxy resin for a later bonding of ferrite and chip (reproduced by permission of AEG Identifikationssystem GmbH, RFID im Blick)

further processing. The workpiece carriers proceed through all subsequent production steps. The next operation is to put epoxy resin or silicon material on each glass tube. The resin will later mechanically fix the chip to the coil ferrite and serve as buffer against impact. The resin hardens into rubber in order to be able to compensate thermal movements between chip and coil ferrite without the transponder being damaged. The workpiece carrier fitted with open glass tubes is now put into a robot in order to manufacture the transponders (Knapich, 2008).

In the robot, the chips are at first separated and inserted into a tool holder. A rotary disk is used to transport the tool holder to the next mounting position where a ferrite core is fitted into the tool holder in a position that exactly fits the chip. In the tool holder chip and ferrite core are now precisely fitted to each other.

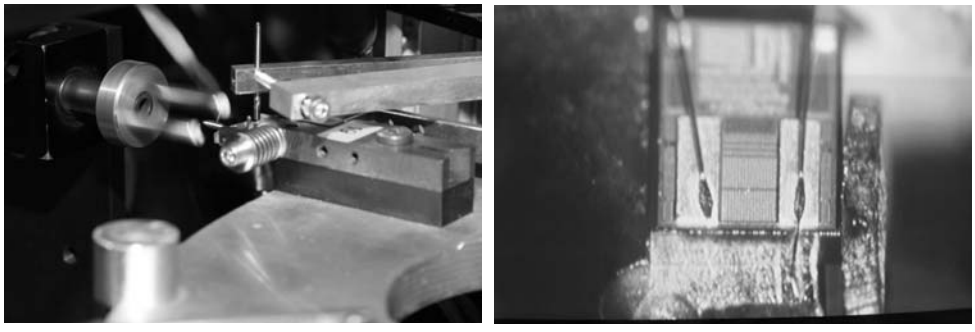

**Figure 12.4** Left: the transponder coil is wound around the ferrite core. Right: contacting the coil to the chip (reproduced by permission of : AEG Identifikationssystem GmbH, RFID im Blick)

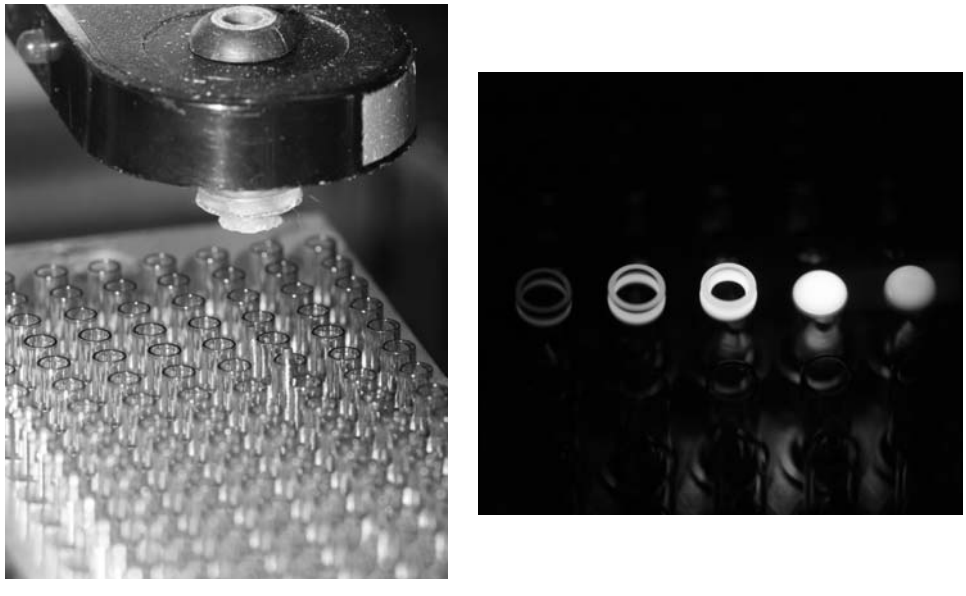

**Figure 12.5** Left: inserting the transponder into the glass tube. Right: sealing the glass tubes with a laser beam. Due to the rotation of the glass tubes, the glass melts together in a dome shape (Knapich, 2008; reproduced by permission of : AEG Identifikationssystem GmbH, RFID im Blick)

During the next step, an automatic coiling machine manufactures the *transponder coil*. Here a copper wire that is insulated with enamel is wound around the ferrite core and then both protruding wire ends of the coil are positioned exactly above the two contact surfaces of the chip. Then thermal compression is used to bond the coil's wire ends to the chip's contact surfaces. For glass transponders, wires have a thickness of only 22 μm. During the same operation, the protruding ends of the contact wires are removed. Now the electronic unit, i.e. the transponder, is fully functional and can be contactlessly activated. This step is followed by a contactless function test to sort out defective transponders. After this test, the fully functional transponders are inserted into the glass tubes with the chip first; here they sink slowly down into the epoxy resin (Knapich, 2008).

Finally, the still open end of the glass tube is melted together with a flame or a laser beam. The glass tubes are rotated through the laser beam; the glass absorbs the light energy of the laser and starts melting. Due to the rotation of the glass tube, the glass melts together forming a dome and seals the transponder airtight (Knapich, 2008). As opposed to flames, a laser has a lower heat impact on the electronics inside the tube. The laser slightly colours the glass in order to be able to absorb light energy and transform it into heat. Using a flame in the melting process requires that there is sufficient space above the electronics (Kern, 2005).

The final step is a complete electrical and mechanical test of the glass transponders which are then packaged as bulk goods.

### *12.1.3 Plastic Transponders*

For many applications, transponders are inserted into a plastic housing. Also here, at first the transponder coil is manufactured and electrically bonded to the chip or a chip module. If we do not use a mechanically stable element such as a ferrite core for the transponder coil, but a cantilever structure, the copper wire used is coated with low-melting-point *baked enamel* in addition to the normal insulating paint. The winding tool is heated to the melting point of the baked enamel during the winding operation. The enamel melts during winding and hardens rapidly after removing the coil from the winding tool, causing the individual windings of the transponder coil to stick together. This guarantees the mechanical stability of the transponder coil during the following stages of assembly.

The semi-finished transponder is then inserted into a housing using injection moulding (e.g. in ABS), moulding, gluing or other methods.

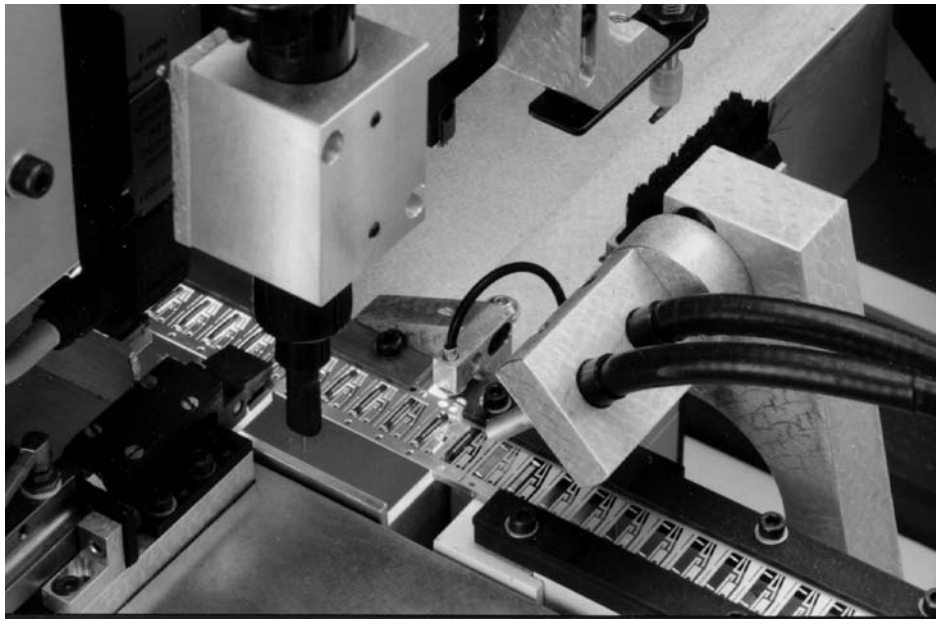

**Figure 12.6** Manufacture of plastic transponders. In the figure an endless belt is fitted with transponder coils wound onto a ferrite core. After the transponder chip has been fitted and contacted, the transponder on the belt is sprayed with plastic (reproduced by permission of AmaTech GmbH & Co. KG, Pfronten)

## 12.2 Contactless Smart Cards

Contactless smart cards represent a very common special type of transponder. DIN/ISO 7810 specifies the format for all ID and smart cards. The dimensions of a smart card are specified as 85.46 × 53.92 × 0.76 mm (± tolerances). The required thickness of just 0.76 mm represents a particular challenge for the manufacture of *contactless smart cards* because this places strict limits on the possible dimensions of the transponder coil and chip module.

A contactless smart card may, for example, be manufactured from four PVC foils of around 0.2 mm thickness: two *inlet foils* that are inserted in the inside of the card and two *overlay foils* that will form the outside of the card. Contactless smart cards are produced in sheets of 21, 24 or 48. The foils used thus have an area of around 0.1–0.3 $m^2$. The typical foil structure of a contactless smart card is shown in Figure 12.7. The two overlay foils are printed with the layout of the smart card. On modern printing machines a high-quality coloured print is possible, such as that familiar from telephone smart cards.

The antenna in the form of a coil is applied to one of the two inlet foils, the carrier foil, and connected to the chip module using a suitable connection technique. Four main procedures are used for the manufacture of the antenna coil: winding, embedding, screen printing and etching.

The carrier foil is covered by a second inlet foil, from which the area of the chip module has been stamped out. Often a filler is also dosed into the remaining hollow space. This filling is necessary to prevent the overlay foils applied after the lamination process (see Section 12.2.3) from collapsing around the chip module and to give a smooth and even card surface (Haghiri and Tarantino, 1999).

### *12.2.1 Coil Manufacture*

#### 12.2.1.1 Winding Technique

In the *winding technique* the transponder coil is wound upon a winding tool in the normal way and affixed using baked enamel. After the chip module has been welded onto the antenna, the semi-finished transponder is placed on the inlet sheet and mechanically affixed using cemented joints (Figure 12.8).

For contactless smart cards in the frequency range <135 kHz the winding technique is the only procedure that can be used for the manufacture of transponder coils due to the high number of windings (typically 50–1500).

#### 12.2.1.2 Embedding Technique

Inlet manufacture using the *embedding technique* (Figures 12.9 and 12.10) is a relatively new procedure that is nevertheless increasing significantly in importance. In this technique, the chip

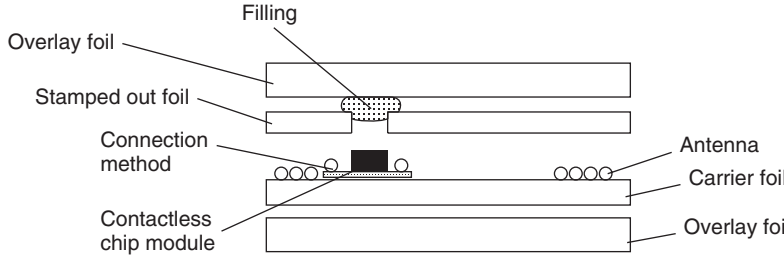


**Figure 12.7** Foil structure of a contactless smart card

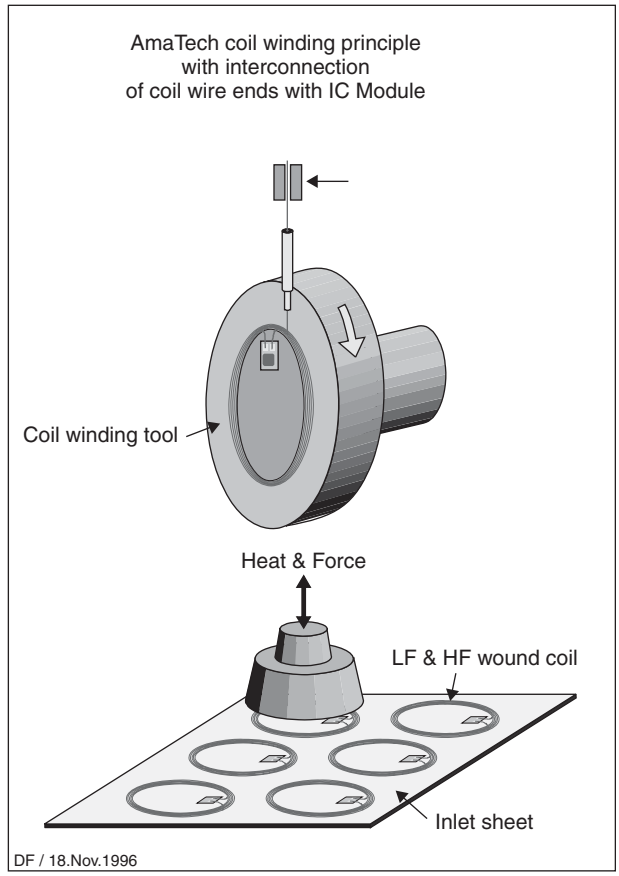


**Figure 12.8** Production of a semi-finished transponder by winding and placing the semi-finished transponder on an inlet sheet (reproduced by permission of AmaTech GmbH & Co. KG, Pfronten)

module is first affixed in its intended location on a PVC foil. The wire is then embedded directly into the foil using a sonotrode. The *sonotrode* consists of an ultrasonic emitter with a passage in its head through which the wire is guided onto the foil. The ultrasound emitter is used to locally heat the wire to such a degree that it melts into the foil and is thus fixed in shape and position. The sonotrode is moved across the inlet foil in a similar manner to an X–Y plotter, while the wire is fed through, so that the transponder can be 'drawn' or embedded. At the start and the end of the coil a spot welding machine is used to make the electrical connection to the transponder module.

#### 12.2.1.3 Screen Printing Technique

The *screen printing technique* is a common printing technique in industrial production and is used, for example, in the production of wallpaper, (PVC) stickers, signs, and also in textile printing. A screen mesh made of synthetic or natural fibres or metal wires is stretched over a frame. The fineness of the screen mesh and the strength of the fibres are selected on the basis of the resolution of the print and the viscosity of the paint. The template is applied to the screen mesh manually or photomechanically. The actual print motif, in our case a coil, remains free. The template material may, for example, be a light-sensitive emulsion that is applied to the screen. If this coated screen

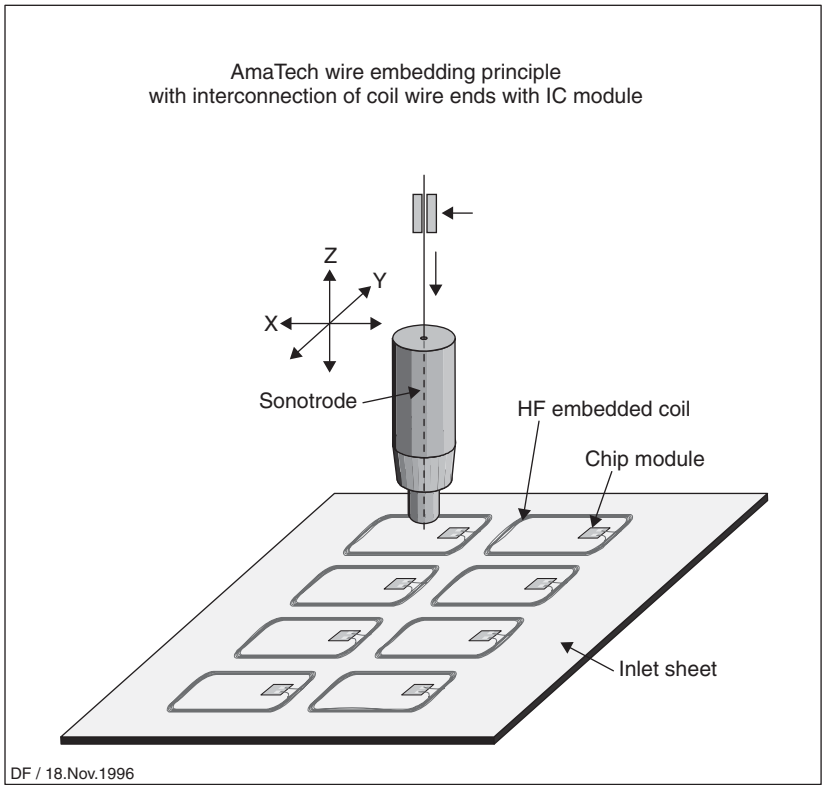


**Figure 12.9** Manufacture of an inlet sheet using the embedding principle (reproduced by permission of AmaTech GmbH & Co. KG, Pfronten)

is illuminated through a printing film, the emulsion hardens at the illuminated points. The points that have not been illuminated are washed out with water. Colour drawn over the screen with a rubber squeegee is pressed through these open points and onto the chosen material. The screen is raised and the print is complete. All structures have a raster pattern due to the screen mesh. The elasticity of the screen guarantees extremely high accuracy.

This procedure is used to print a coil of any shape directly onto an inlet foil (see Figure 12.8). So-called *polymer thick film pastes* (PTF) are used as the 'printing ink'. These consist of a powder of conductive material (silver, copper, graphite), a light solvent, and a resin as the fixing agent. After drying out, a conductive film is left behind in the printed shape on the inlet. The *surface resistance* $R_A$[1] of the film is around 5–100 $\Omega/\square$[1] and falls back to around 50–80% after lamination, since

[1] The surface resistance $R_A$ of a quadratic conductive layer is dependent only upon the specific conductivity $\kappa$ and the thickness $d$ of the conductive layer and is quoted in $\Omega/\square$:

$$R_A = \frac{1}{\kappa \cdot d} = \frac{\rho}{d}$$

To determine the conductive track resistance, the surface resistance is multiplied by the ratio of length $l$ to breadth $b$ of the conductive track:

$$R = R_A \cdot \frac{l}{b}$$

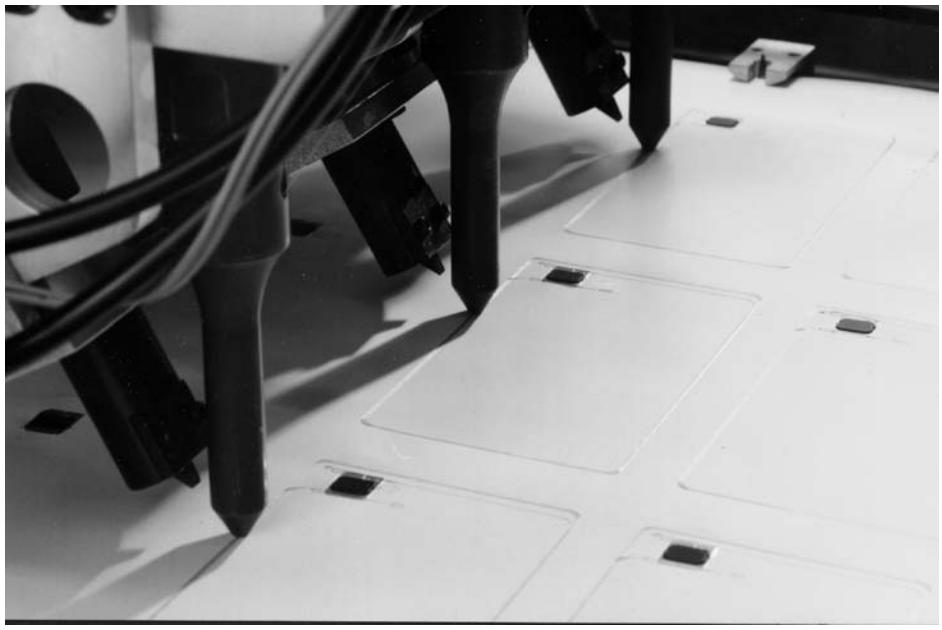

**Figure 12.10** Manufacture of a smart card coil using the embedding technique on an inlet foil. The sonotrodes, the welding electrodes (to the left of the sonotrodes) for contacting the coils, and some finished transponder coils are visible (reproduced by permission of AmaTech GmbH & Co. KG, Pfronten)

**Table 12.1** Surface resistance of polymer thick film pastes with different admixtures given a layer thickness of 25 μm (Anderson, 1998)

| Conductor | Surface resistance (mΩ/□) |
|---|---|
| Silver (Ag) | 5–20 |
| Copper (Cu) | 30–120 |
| Graphite (carbon) | 20 000–100 000 |

the effect of heat and pressure during the lamination process increases the partial contact between the individual grains of the mixed (metal) powder.

Depending upon layer thickness, conductor track width, and number of windings, a typical coil resistance of 2–75 Ω (smart card with 2–7 windings) can be achieved. Due to the broad conductor track path (i.e. limited number of windings) this technology is, however, only suitable for frequency ranges above 8 MHz. Due to cost benefits, printed coils are also used for EAS tags (8 MHz) and smart labels (13.56 MHz).

#### 12.2.1.4 Etching Technique

The *etching technique* is the standard procedure used in the electrical industry for the manufacture of printed circuit boards. Inlet foils for contactless smart cards can also be manufactured using this

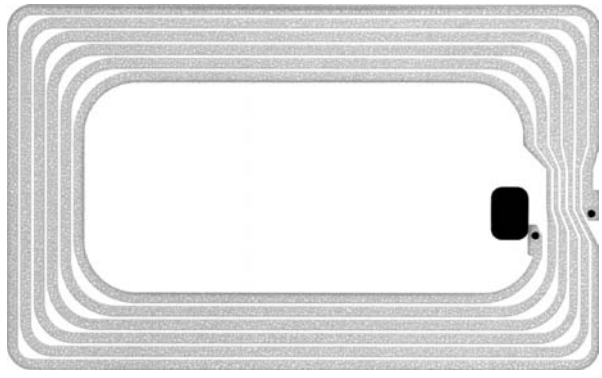

**Figure 12.11** Example of a 13.56 MHz smart card coil using screen printing technology

**Table 12.2** Typical properties of some polymer thick film pastes (Anderson, 1998)

| Paste | Dupont 5028 | Dupont 5029 |
|---|---|---|
| Surface resistance after drying (mΩ/□) | 27–33 | 14–20 |
| Surface resistance after lamination (mΩ/□) | 8–10 | 4–5 |
| Layer thickness after drying (200 μm screen) (μm> | 16–20 | 28–32 |
| Viscosity (RVT UC&S 14 10 rpm) (Pa s) | 15–30 | 35–50 |

procedure. In a special procedure a full-sized copper foil of 35–70 μm thickness is first laminated onto a plastic foil without the use of adhesive. This copper layer is now coated with a light-sensitive photo-resist, which is dried and then illuminated through a positive film. The picture on the positive film is the subsequent form of the coil. In a chemical developing solution the illuminated points of the photo-resist are washed out, so that copper is once again exposed at these points. In the subsequent etching bath, all areas that are no longer covered by photo-resist are etched free of copper, so that finally only the desired coil form remains. The coil resistance of an etched coil can easily be calculated from the surface resistance $R_A$ (Cu: 500 μΩ/□ where $d = 35$ μm).

## *12.2.2 Connection Technique*

The different types of antenna also require a different connection technique between the antenna coil and the transponder chip.

Antenna coils made of wire, i.e. wound or embedded coils, are connected to the chip module using microwelding techniques. The lacquer enamelled antenna coil is bared in the connection area of the chip module using a special tool and then welded to the terminals (lead frames) of the chip module using ultrasound (Haghiri and Tarantino, 1999).

*Contacting* a printed coil to the chip or a module is problematic as conventional soldering and welding techniques do not work for polymer pastes. The use of flip chip technology,[2] in which

[2] The unhoused chip is placed directly upon the terminals of the coil with the contact areas (bond pads) downwards.

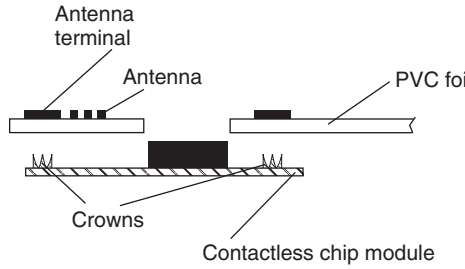


**Figure 12.12** Contacting of a chip module to a printed or etched antenna by means of cut clamp technology

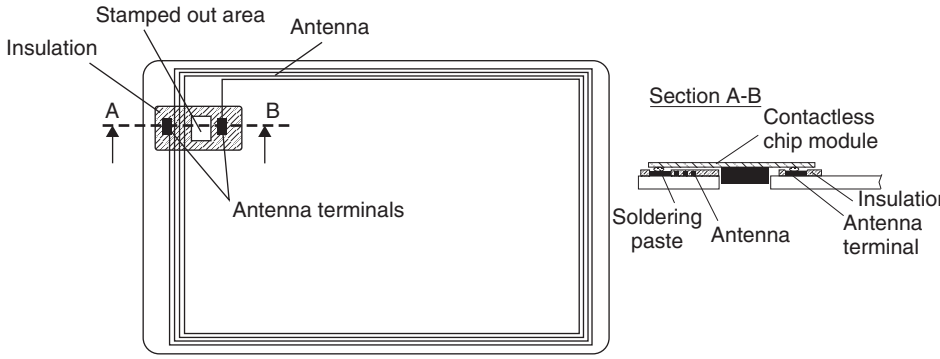


**Figure 12.13** Soldered connection between the chip module and an etched antenna

fixing and contacting of the chip can take place using a conductive adhesive, offers a solution. A second solution is the use of cut clamp technology (CCT). In this approach the metal terminals (lead frame) of the chip module are punched through with a pointed tool, so that pointed crowns are formed (Figure 12.12). The chip module is then pressed onto the carrier foil from below, so that the peaks of the crown penetrate the foil and make contact with the antenna terminals. The crown peaks are bent over using a flat stamp, making a permanent mechanical and electrical connection between the chip module and the antenna coils.

Finally, a reflow soldering procedure, like the procedure used for fitting components to SMD printed circuit boards, is available for the connection of an etched coil to a chip module. In order to prevent short-circuits (between the coil windings) in the vicinity of the chip module as a result of the soldering process, the coil is first printed with a solder resist (typically light green), keeping the antenna terminals free. A defined quantity of soldering paste is deposited onto these connection areas by a dispenser. After the chip module has been inserted into a stamped hole on the carrier foil provided for this purpose and is thus fixed into position, heat is supplied to the terminals of the chip module by a suitable soldering tool (soldering stamp). This causes the soldering paste to melt, creating a permanent electrical and mechanical connection between the chip module and the antenna coil.

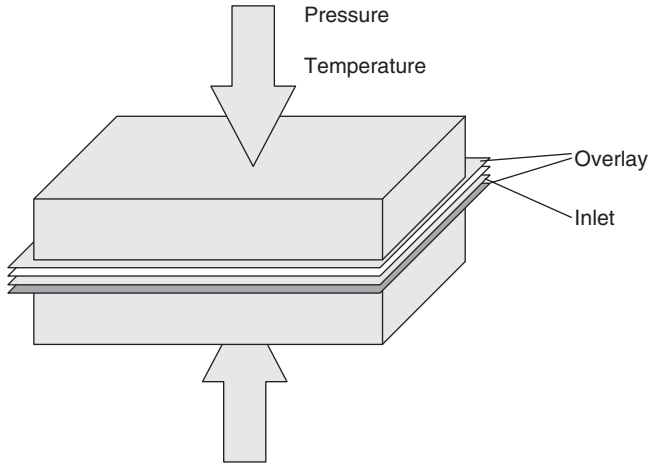


**Figure 12.14** During the lamination procedure the PVC sheets are melted at high pressure and temperatures up to 150 °C

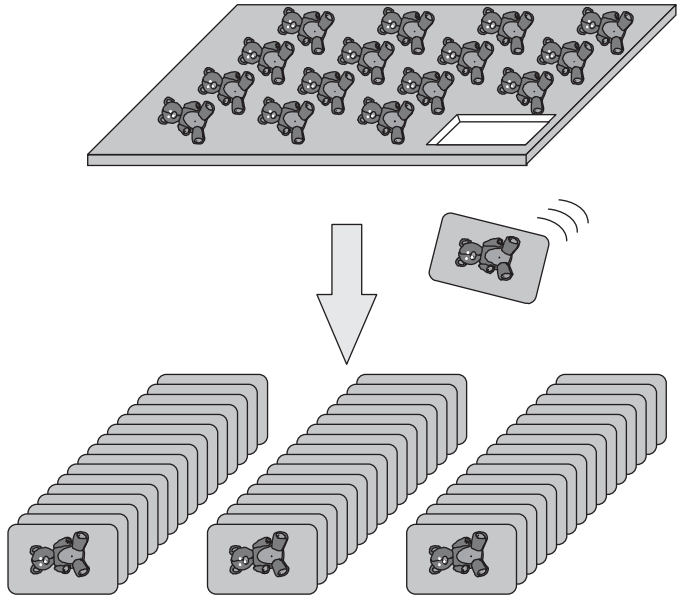

**Figure 12.15** After the cooling of the PVC sheets the individual cards are stamped out of the multi-purpose sheets

### *12.2.3 Lamination*

In the next step, the overlay and inlet foils are assembled and joined together with precision. Finally, the foils are placed in a laminating machine. By the conduction of heat, the foils are brought into a soft elastic state at high pressure (approximately 100–150 °C). This 'bakes' the four sheets to create a permanent bond.

After the *lamination* and cooling of the laminated PVC foils, the individual smart cards are stamped out of the multi-purpose sheet (Figure 12.15). A subsequent functional test ensures the quality of the cards before these can be sent to the customer.

# 13

# Example Applications

## 13.1 Contactless Smart Cards

The first plastic cards appeared in the USA as early as the beginning of the 1950s, when cheap PVC replaced cardboard. In the years that followed, plastic credit cards became widespread. Incidentally, the first credit card was issued by Diners Club in 1950.

The rapid development of semiconductor technology made it possible to integrate data memory and protective logic onto a single silicon chip in the 1970s. The idea of incorporating such an integrated memory chip into an identification card was patented in 1968 by *Jürgen Dethloff* and *Helmut Grötrupp* in Germany. However, it was not until almost 15 years later that the great breakthrough was achieved with the introduction of the telephone smart card by the French company PTT. Several million telephone smart cards were in circulation in France by 1986 (Rankl and Effing, 1996). These first generation smart cards were memory cards with contacts. A significant improvement was achieved when entire microprocessors were successfully integrated into a silicon chip, and these chips incorporated into an identification card. This made it possible to run software in a smart card, thus opening up the possibility of realising high-security applications. Thus, smart cards for mobile telephones and the new bank cards (EC with chip) were realised exclusively using microprocessor cards.

Since the mid-1980s, repeated attempts have been made to launch contactless smart cards onto the market. The operating frequency of 135 kHz that was normal at the time and the high power consumption of the silicon chips on the market necessitated transponder coils with several hundred windings. The resulting large coil cross-section, and the additional capacitors that were often required, impeded manufacture in the form of ID-1 format plastic cards, and transponders were usually cast into inconvenient plastic shells. Due to this limitation, contactless smart cards played a minor role in the smart card market for a long time.

In the first half of the 1990s, transponder systems were developed with an operating frequency of 13.56 MHz. The transponders required for these systems required just five windings. For the first time it was possible to produce transponder systems in the 0.76- mm-thick ID-1 format. The great breakthrough in Germany occurred in 1995, with the introduction of the 'Frequent Traveller' contactless customer loyalty card in ID-1 format by the German company Lufthansa AG. It was noteworthy that these cards, manufactured by the Munich company Giesecke & Devrient, still had a magnetic strip, a hologram and were embossed with the customer number and name.

*RFID Handbook: Fundamentals and Applications in Contactless Smart Cards, Radio Frequency Identification and Near-Field Communication, Third Edition.* Klaus Finkenzeller
© 2010 John Wiley & Sons, Ltd

Today, contactless smart cards are divided into three groups based upon the applicable standards (see also Figure 9.8).

*Close coupling* smart cards according to *ISO/IEC 10536* (see Section 9.2.1). *Proximity-coupling* smart cards according to *ISO/IEC 14443* (see Section 9.2.2) as well as v*icinity-coupling* smart cards according to *ISO/IEC 15693* (see Section 9.2.3). These three types have been developed explicitly for contactless smart cards and their typical applications. In addition, it is possible to produce any other RFID standard as a contactless smart card. Mainly LF and UHF transponders are available as contactless smart cards.

Proximity-coupled cards according to ISO/IEC 14443 have by far the largest market share as several millions are used for ticketing and payment systems. A large part of proximity-coupling smart cards are currently still memory cards (see Section 10.1.3), but also microprocessor cards available since 1997 (Section 10.2) are increasing their market share as they combine large flexibility in the application design with high data security.

As opposed to this, the above-mentioned contactless smart cards in the LF or UHF range are used to a lesser extent, even though UHF smart cards, above all, (e.g. according to *ISO/IEC 18000-6*) have reading ranges of several metres.

Close-coupling smart cards are being faded out as their production is very costly due to the required capacitive coupling area required in connection with two antenna coils. And close-coupling smart cards do not even have any handling advantages compared with traditional smart cards with contacts as they also have to be inserted into a reader in order to be read out.

## 13.2 Public Transport

*Public transport* is one of the applications where the greatest potential exists for the use of RFID systems, particularly contactless smart cards. In Europe and the USA traffic associations are still operating at a huge loss, sometimes as much as 40% of turnover (Czako, 1997), which must be made up by subsidies from the community and country in question. Due to the increasing shortage of resources, long-term solutions must be sought that will cut these losses by reducing costs and increasing income. The use of contactless smart cards as electronic travel passes could make an important contribution to improving the situation (AFC = *automatic fare collection*). In the field of fare management in particular there is a great deal of room for improvement.

### *13.2.1 The Starting Point*

The unhealthy financial situation of transport companies naturally has many different causes. However, the following factors are worth mentioning in connection with electronic travel passes:

- Transport companies incur high costs through the sale of travel passes by automatic dispensers. For example, the sale of a travel pass through an automatic dispenser in Zürich costs CHF 0.45, where the average sales price is CHF 2.80 (Czako, 1997). Thus, 16% of the sales price is lost from the outset by the provision of the dispenser, maintenance and repairs alone (filling with notes and coins, repairs, damage by vandalism).
- In vehicles, too, expensive electronic ticket printers or mobile devices are required. Sometimes the tickets are even sold by the driver, which causes long waiting times while passengers board, plus the additional security risk presented by the continuous distraction of the driver.
- Paper tickets are thrown away after use, although the manufacture of fraud-proof tickets for transport companies is becoming more and more expensive.

- In German cities in particular, losses of up to 25% must be taken into account due to fare-dodgers (Czako, 1997). This is because German transport companies have very liberal travelling conditions and permit entry to the underground system and buses without travel passes first being checked.
- Association discounts can only be calculated on the basis of costly random counts, which leads to imprecision in the calculation.

## *13.2.2 Requirements*

Electronic fare management systems have to fulfil very high expectations and requirements, particularly with regard to resistance to degradation and wear, write and read speed and ease of use. These expectations can only be satisfactorily fulfilled by RFID systems. The most common format for contactless smart cards is the ID-1 format and, recently, wrist watches.

### 13.2.2.1 Transaction Time

The time taken for the purchase or verification of a travel pass is particularly critical in transport systems in which the pass can only be checked inside the vehicle. This is a particular problem in buses and trams. In the underground railway, passes can be checked at a turnstile, or by conductors. A comparison of different methods (Table 13.1) shows the clear superiority of RFID systems in terms of transaction times.

### 13.2.2.2 Resistance to Degradation, Lifetime, Convenience

- Contactless smart cards are designed for a lifetime of 10 years. Rain, cold, dirt and dust are not a problem for either smart card or reader.
- Contactless smart cards can be kept in a briefcase or handbag and are therefore extremely convenient to use. Transponders can also be fitted into wrist watches.

## *13.2.3 Benefits of RFID Systems*

The replacement of conventional paper tickets by a modern electronic fare management system based on contactless smart cards provides a multitude of benefits to all those involved. Although the purchase costs of a contactless smart card system are still higher than those of a conventional system, the investment should repay itself within a short period. The superiority of contactless

**Table 13.1** Passenger processing times for different technologies. Source: transport companies in Helsinki, taken from Czako (1997)

| Technology | Passenger processing time(s) |
|---|---|
| RFID I (remote coupling) | 1.7 |
| Visual verification by driver | 2.0 |
| RFID II (close-coupling) | 2.5 |
| Smart card with contacts | 3.5 |
| Cash | >6 |

**Figure 13.1** Contactless reader in a public transport system (photo: Frydek-Mistek project, Czechoslovakia, reproduced by permission of Philips Semiconductors Gratkorn, A-Gratkorn)

systems is demonstrated by the following benefits for users and operators of public transport companies.

*Benefits for passengers*

- Cash is no longer necessary, contactless smart cards can be loaded with large amounts of money, passengers no longer need to carry the correct change.
- Prepaid contactless smart cards remain valid even if fares are changed.
- The passenger no longer needs to know the precise fare; the system automatically deducts the correct fare from the card.
- Monthly tickets can begin on any day of the month. The period of validity begins after the first deduction from the contactless card.

*Benefits for the driver*

- Passes are no longer sold, resulting in less distraction of driving staff.
- No cash in vehicle.
- Elimination of the daily income calculation.

*Benefits for the transport company*

- Reduction in operating and maintenance costs of sales dispensers and ticket devaluers.
- Very secure against vandalism (e.g. the use of chewing gum to sabotage an electronic device).
- It is easy to change fares; no new tickets need to be printed.

- The introduction of a closed (electronic) system, in which all passengers must produce a valid travel pass, can significantly reduce the number of fare-dodgers.

*Benefits for the transport association*

- It is possible to calculate the performance of individual partners in the association. Because precise data is obtained automatically in electronic fare management systems, the discount for the association can be calculated using precise figures.
- Expressive statistical data is obtained.

*Benefits for the treasury*

- Reduction of the need for subsidies due to cost reductions.
- Better use of public transport due to the improved service has a positive effect on takings and on the environment.

### *13.2.4 Fare Systems using Electronic Payment*

Transport association regions are often divided into different fare zones and payment zones. There are also different types of travel pass, time zones and numerous possible combinations. The calculation of the fare can therefore be extremely complicated in conventional payment systems and can even be a source of bewilderment to local customers.

Electronic fare management systems, on the other hand, facilitate the use of completely new procedures for the calculation and payment of fares. There are four basic models for electronic fare calculation, as shown in Table 13.2.

**Table 13.2** Different fare systems for payment with contactless smart card

| | |
|---|---|
| Fare system 1 | Payment takes place at the beginning of the journey. A fixed amount is deducted from the contactless smart card, regardless of the distance travelled |
| Fare system 2 | At the beginning of the journey the entry point (check-in) is recorded on the contactless card. Upon disembarking at the final station (check-out), the fare for the distance travelled is automatically calculated and deducted from the card. In addition, the card can be checked at each change-over point for the existence of a valid 'check-in' entry. To foil attempts at manipulation, the lack of a 'check-out' record can be penalised by the deduction of the maximum fare at the beginning of the next journey |
| Fare system 3 | This model is best suited for interlinked networks, in which the same route can be travelled using different transport systems at different fares. Every time the passenger changes vehicles a predetermined amount is deducted from the card, bonus fares for long-distance travellers and people who change several times can be automatically taken into account (see Figure 13.4) |
| Best price calculation | In this system all journeys made are recorded on the contactless card for a month. If a certain number of journeys was exceeded on one day or in the month as a whole, then the contactless card can automatically be converted into a cheaper 24-hour or monthly card. This gives the customer maximum flexibility and the best possible fares. Best price calculation improves customer relations and makes a big contribution to customer satisfaction |

## 13.2.5 Market Potential

It is estimated that around 50% of all contactless cards sold are used in the public transport sector (Hamann, 1997). The biggest areas of use are the large population centres in Asia (Seoul, Hong Kong, Singapore, Shanghai), and European cities (Paris, London, Berlin). In 1994 and 1995 around 1 million contactless smart cards were produced per year worldwide for public transport applications. In the period 1996 to 1997 the volume rose to over 40 million cards per year (Droschl, 1997). The expected volume for 1998 alone is around 100 million contactless smart cards worldwide for public transport applications (Hamann, 1997). Given annual growth rates of 60% or more, we can expect the annual demand for contactless smart cards to have risen to 250 million by the turn of the century.

The highest growth rates for contactless smart cards in public transport applications will be in the Asia-Pacific area, because of the new infrastructures being created here using the latest technologies (Droschl, 1997).

## 13.2.6 Example Projects

### 13.2.6.1 Korea – Seoul

The largest electronic travel pass system (AFC) yet to use contactless cards was commissioned at the start of 1996 in the metropolis of *Seoul*, South Korea (see Figures 13.5–13.7). The Korean 'Bus Card' is a prepaid card, issued with a basic value of 20 000 Won (€17). Fares are calculated according to fare system 1. A bus journey costs an average of 400 Won (€0.35), but every time the passenger changes vehicles they must pay again.

The card can be used on all 453 lines and recharged at identified kiosks as required. The transport association, Seoul Bus Union, is made up of 89 individual operator companies with a total of over 8700 buses, which were all equipped with contactless terminals by the middle of 1996. When the Kyung-Ki province that surrounds the capital city was included in the scheme, a further 4000 buses and a total of 3500 charging points were fitted with terminals by 1997 (Droschl, 1997). The RFID

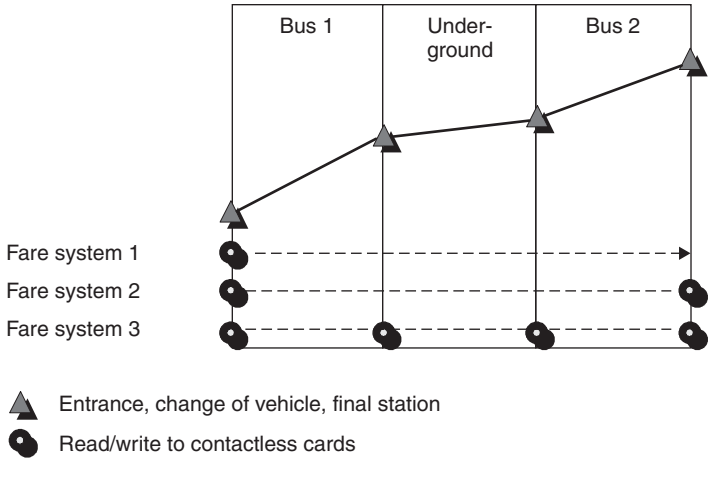


**Figure 13.2** Use of the different tariff systems in a journey by public transport. The journey shown involves two changes between the underground and bus network. The number of times the smart card is read depends upon the fare system used

**Figure 13.3** Use of a contactless smart card in Seoul. A contactless terminal is shown in communication with a contactless smart card in the centre of the picture (reproduced by permission of Intec)

**Figure 13.4** Contactless smart card for paying for journeys in a scheduled bus in Seoul (reproduced by permission of Klaus Finkenzeller, Munich)

technology used in this project is the MIFARE® system (inductively coupled, 10 cm, 13.56 MHz), which is very popular in public transport applications.

It is predicted that four million Bus Cards will be in circulation by the end of 1997. The huge success of this system has convinced the government of Seoul to introduce a compatible system for the underground railway system.

#### 13.2.6.2 Germany – Lüneburg, Oldenburg

One of the first smart card projects in Germany's public transport system is the *Fahrsmart* project in the KVG Lüneburg – VWG Oldenburg transport association. The subsidised *Fahrsmart* pilot project was launched by the Ministry for Education and Research in this area as early as 1990/91. Around 20 000 smart cards with contacts were issued to customers for this project. However, significant flaws in the installed systems became evident during this pilot project; the biggest problem was that the registration time of over three seconds per passenger was considered to be excessive.

**Figure 13.5** Reader for contactless smart cards at the entrance of a scheduled bus in Seoul (reproduced by permission of Klaus Finkenzeller, Munich)

At the beginning of 1995 a new field test was launched, the Fahrsmart II system based upon contactless smart cards. The RFID technology used was the MIFARE® system by Philips/Mikron. System integration, i.e. the commissioning of the entire system, was performed by Siemens VT (Berlin).

The Fahrsmart system automatically calculates the cheapest price for the customer (best price guarantee). The passenger must check in at the start of the journey using their personal smart card and check out at the end of the journey. The journey data obtained are collected in the on-board computer and stored on the smart card for verification.

When the vehicle returns to the depot at the end of the day the current day's data is sent from the vehicle computer to the station server via an infrared interface (Figure 13.6). The processed data is then transferred to the central Fahrsmart server via an internal network. To calculate the monthly invoice, the Fahrsmart server analyses the usage profile of each individual passenger and calculates the cheapest ticket for the distance travelled (individual journey, weekly pass, monthly pass etc.).

#### 13.2.6.3 EU Projects – ICARE and CALYPSO

Some of the above-mentioned local transport projects using contactless smart cards, like almost all projects realised to date, are so-called closed exchange systems. In practice this means that the smart cards are 'charged up' with money, but can only be used within the public transport system in question as a ticket or means of payment for small amounts – for example in the operating

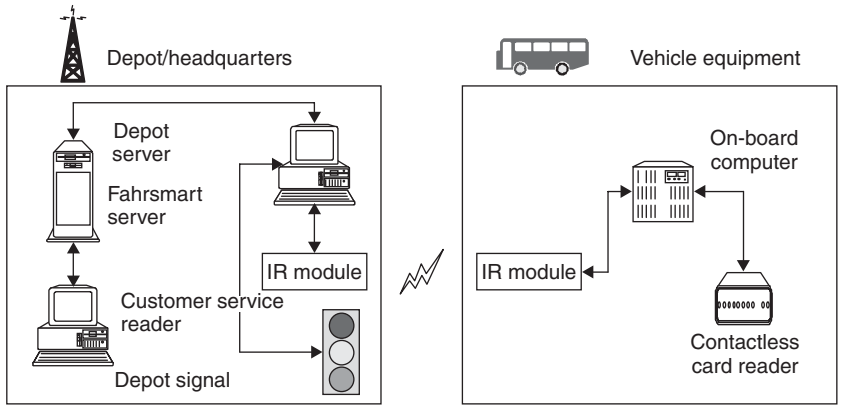


**Figure 13.6** System components of the Fahrsmart system. The vehicle equipment consists of a reader for contactless smart cards, which is linked to the on-board computer. Upon entry into the station, the record data is transferred from the on-board computer to a depot server via an infrared link

**Figure 13.7** Fahrsmart II contactless smart card, partially cut away. The transponder coil is clearly visible at the lower right-hand edge of the picture (reproduced by permission of Giesecke & Devrient, Munich)

company's drinks machines. They cannot be used in other shops or even as an electronic travel pass in other towns. This means that the card holder has to store money for a specific application in the electronic purse of each closed system and no longer has direct access to this for a different application, e.g. telephone smart card, contactless travel pass, prepaid card for the company restaurant (Lorenz, 1998b). This is the result of the card technology used, since the cards that have predominated up until now have only a memory chip and thus do not satisfy the strict security requirements of the credit institutes for open automated financial exchange systems.

Open financial exchange systems based upon a microprocessor chip have already been successfully introduced in the field of contact smart cards. In Germany these systems are the Paycard from Telekom, the VISA-Cash-Karte, and the 'ec-Karte mit Chip', the latter having the greatest customer base with approximately 50–55 million cards in use. These cards were designed for payments of small sums and can be used everywhere that suitable readers are available. From the point of view of the user, it would be ideal if the cash card could be used as a ticket for local public transport. Due to the high transaction times of contact smart cards (see Section 13.2.2.1) electronic cash cards have also not yet been able to establish themselves as an electronic travel pass in local public transport applications.

Various solutions have been proposed that aim to combine the user-friendliness of contactless tickets with the security of contact exchange systems, and thus improve the acceptance of such systems by customers (Lorenz, 1998b).

The *hybrid card* is the combination of a contactless smart card with an additional contact chip on one card. There is, however, no electrical connection between the two chips. This means that it must be possible to transfer sums of money from one chip to the other – for example in special machines. Due to this limitation, the hybrid card too can only be considered as a provisional solution.

The *dual interface card* (or Combicard, see Section 10.2.1) resulted from the combination of a contact and a contactless interface on a single card chip. This is actually the ideal solution for the combination of an electronic travel pass with an open financial exchange system. However, the question of when the electronic purse of the German ZKA (ec-card) will be available as a dual interface card, and what quantities will exist, must remain unanswered for the present. However, VISA has already announced that it will integrate its VISA cash chip, previously based upon contact technology, into a combichip in Madrid.

The envelope solution, in which a contactless 'adapter' turns the contact smart card into a contactless pass, offers the advantage over the above-mentioned variants that the microprocessor smart cards already in circulation can be made usable as contactless cards without changing the cards themselves.

The envelope solution is central to ICARE ('Integration of contactless technologies into public transport environment'). This EU-supported project is oriented towards the use of open electronic exchange systems in local public transport systems (Lorenz, 1998a). The field trials for this project, which was started as early as 1996, will be performed in various European regions.

In Paris, the largest European conurbation, 40 000 RATP staff and 4000 passengers have already been equipped with an envelope. As an additional feature, an emergency call feature has been developed that is currently being tested in the Metro. This feature can be triggered by means of the envelope. In addition to the envelope concept, the development of a disposable ticket was also given some priority in Paris.

In Venice, a town with a high proportion of day trippers, several landing stages have been fitted with contactless readers. In addition to the contactless ticket function, a central feature in Venice is the multi-functionality of the concept. The card can be used in museums, hotels, or as a car park ticket.

In the district of Constance on Lake Constance, after an initial field trial in Autumn 1996, a second field trial was initiated in January 1998. In this second trial the cashcard of the local savings bank is used in conjunction with an envelope to form the 'FlexPass' (Lorenz, 1998b), which can be used in local transport (see Figure 13.8). A hands-free antenna with a range of 1 m allows statistical data on card use to be recorded without the customer having to hold the envelope near to the reader.

In Lisbon, a medium-sized European capital city with a complex local public transport system and numerous public and private operating companies, the development of a hands-free antenna was also central to the project.

Since 1998, research activities have been continued under the EU *CALYPSO* project (contact and contactless environments yielding a citizen pass integrating urban services and financial operations). Transport companies have increased their efforts to build up a partnership with the operators

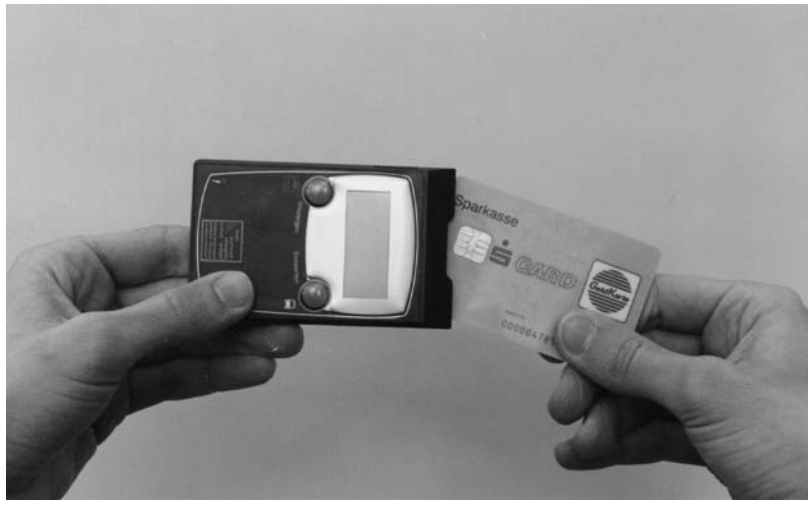


**Figure 13.8** The contactless FlexPass of the district of Constance showing the GeldKarte and envelope (reproduced by permission of TCAC GmbH, Dresden)

**Figure 13.9** Contactless transaction using the FlexPass at a reader (reproduced by permission of TCAC GmbH, Dresden)

of automated exchange systems. Among other companies from the German credit industry, the Deutsche Sparkassen- und Giroverband (DSGV) has been recruited as a partner (Ampélas, 1998; Lorenz, 1998c).

The objective of the CALYPSO project is the 'FlexPass'. The intention is that this will replace both the paper ticket and the cash used by the customer for payment. A new aspect of the project is the introduction of further services on the envelope, for example a dynamic passenger information service, i.e. departure times and connections are shown on the display. Use in car parks or the integration of (emergency) call services is also being considered.

In the long term, the inclusion of further applications in the fields of parking, tourism, public administration, or even car-sharing on the FlexPass is planned (Lorenz, 1998c).

## 13.3 Contactless Payment Systems

From the outset of RFID technology, contactless smart cards and transponders have been used for paying for goods and services. The different systems distinguish between *closed* and *open payment systems*.

A closed payment system is a system that only works within the operational range of a specific provider and can only be used for purchasing goods or services from this particular provider. Typical examples are contactless smart cards in university refectories, company canteens or RFID wristbands in swimming pools that are used to pay for food purchased in the snack bar. These are mainly prepaid systems, which means that the card has to be loaded at a loading terminal with cash that is credited to the smart card and is then debited at the provider's cash desk. As closed systems are tailored to the needs of the system provider, a large variety of RFID standards and data structures are used.

As opposed to this, open payment systems are systems that use contactless smart cards instead of cash. Open payment systems are based on national or global standards such as *EMV specifications* (EMV – Europay, Mastercard, Visa) and are nationally and even internationally available. The use of contactless smart cards does in principle not differ from that of magnetic or chip cards. The main difference is the interface between card and terminal, i.e. the physical procedure that the terminal uses to read out credit card data. Usually, in payment systems contactless smart cards apply standard *ISO/IEC 14443* for data transmission. Regarding commands and data elements sent by the terminal, EMV specifications apply. These are usually reduced to the required minimum in order to achieve short transaction times. According to current standards, the card does not have to be placed more than 200 ms in front of the reader, more complex issues may even take up to 500 ms. The card holder must have the impression that the contactless card allows a very fast payment (Johne, 2008). In favour of extremely short transaction times, contactless payment systems often work with the authentification of the card holder, which usually requires entering a PIN or signing a payment receipt.

For open payment systems, the p*oint-of-sale (POS)* often is the point where the customer pays for goods or services. This can be the cash desk in a supermarket, but also the tax office at a townhall or an automatic fuelling terminal working with bank cards. The technical device used is a *POS terminal* that reads the data of a contactless smart card, verifies the card data and forwards the data for payment transaction to a bank background system.

A closer look shows how the different components interact. The customer as a card holder receives a credit or debit card from his or her bank. The bank also issues the card and establishes the connection to the card holder's account. The bank, in turn, is supported by a superordinated payment system, such as MasterCard or Visa.

On the other side, a retailer who wants to offer a contactless payment option to his or her customers operates a POS terminal. This is a specific contactless reader which is equipped with security electronics and connected online via a communication network, such as ISDN, Datex

**Figure 13.10** Payment process with a contactless smart card at a contactless POS terminal (reproduced by permission of Vivotech)

connections, IP networks and sometimes even analogue connections, to the retailer bank. Common international usage denominates the *retailer bank* as *acquirer* and the customer's bank issuing the card as *issuer*. The aquirer as the finance service provider for the affiliated retailers operates its own data-processing centre for payment transactions with a large number of POS terminals that are connected to it online (Johne, 2008).

During payment transactions, the POS terminal sends – after a plausibility check of the card data – a data set to the acquirer. In addition to the purchase price, the data set contains the customer's card data, such as card number or validity date. The acquirer now requests the customer's bank, i.e. the issuer, to decide whether the card may be accepted or not. The acquirer sends a request to the superordinated payment system (e.g. MasterCard or Visa) which, in turn, establishes a connection to the issuer. The issuer decides, based on the received card data, whether the transaction may be carried out and authorizes the process by providing the acquirer with a response for the POS terminal[1]. At the end of this process, the card will be accepted or declined by the terminal (Johne, 2008).

After authorizing a transaction (online or offline), from a customer's perspective the payment process is finished. For credit card payments, he or she only has to sign a voucher and gets the receipt. At the end of the day, the retailer balances the cash account at the POS terminal. At first all saved offline transaction data sets as well as a totals record – usually split according to payment systems – is transmitted to the acquirer. This totals record requests the acquirer to send via the network of the respective payment systems a message to the issuer to credit the authorizations

[1] In the case of payment with PIN code, even the PIN previously encrypted by the terminal is sent this way for verification from the terminal to the issuer.

made during the day. This will prompt the issuer to debit the corresponding customer account and credit the amount for payment to the acquirer and subsequently to the individual retailer[2].

Regarding the processes between terminal and background system, the payment procedures described are identical for all card types – magnetic-striped, contact or contactless smart cards. There are clear differences, though, for the handling between terminal and the card itself. In the case of magnetic stripes, only a limited amount of data is read out. For smart cards, terminal and card communicate in a very complex way, reading out a large amount of data from the card and verifying it at the terminal. Using cryptographic methods such as RSA, it is even possible to determine the authenticity of the card and the issuer and thus prevent cards from being copied. EMV specifications define a corresponding method.

Already in 2003, the global *credit card organizations* American Express®, MasterCard® and Visa® started offering to issuers, acquirers and retailers first field trials for contactless payment. Since 2005, the positive customer and retailer response has led to a wide introduction of contactless smart cards in open payment systems. The credit card organizations use one and the same standards. This way the terminal is able to easily read cards of different organizations.

Contactless credit cards and POS terminals communicating according to ISO/IEC 14442 at 13.56 MHz and corresponding to the common EMV standard can be recognized by the printed wave symbol .

### *13.3.1 MasterCard®*

In 2003, *MasterCard* started the field trials of the contactless *PayPass* project in the US; and in 2005 regular operation began. Classical issuers, such as Chase, Citibank or MBNA issue contactless credit cards to customers. The physical interface is ISO/IEC 14443-specified (Vivotech, 2006). The cards continue to have the classical magnetic stripe.

### *13.3.2 ExpressPay by American Express®*

In 2005 *American Express* introduced in the US its contactless payment system *ExpressPay*. ExpressPay transponders are available in different designs, for instance as contactless credit cards with magnetic stripes and holograms or as also as a practical keyring pendant. By calculating a digital signature via the transaction data on a card, ExpressPay offers more security against attacks and forgery. The cards' physical interface is ISO/IEC 14443-specified (Vivotech, 2006).

### *13.3.3 Visa® Contactless*

In 2006, Visa introduced in Asia a contactless payment system *Visa Wave*. In Asia, all contactless credit cards are equipped with dual-interface chips and thus can be activated both with and without contact (Vivotech, 2006). The card's physical interface complies with specifications ISO/IEC 14443 and ISO/IEC 7816 (contact interface). Both classical credit cards as well as debit cards and pre-paid cards are issued.

[2] It depends on card type (credit card or debit card), at what exact time the customer card account will be debited. Debit cards usually prompt immediate cash flow (even called 'pay now'). For credit card payments, the customer account often is debited at a later time, once a month, for instance.

**Figure 13.11** Contactless Speedpass transponder as keyring pendant (reproduced by permission of ExxonMobil)

### *13.3.4 ExxonMobil Speedpass*

As early as 1997, *Mobile Oil Corp*. (later *ExxonMobil*) introduced *Speedpass* in the US in order to facilitate payments at service stations. Speedpass is a 125 kHz transponder which is available as a small *keyring pendant* or integrated into a *wrist watch*. The reader is located directly in the petrol pump at the service station. The transponder itself does not contain any credit card information, but only a unique customer identification as well as a cryptographic code. Customers' bank details are all lodged in the background system of the Speedpass system and thus cannot be spied out (Vivotech, 2006). To pay the petrol bill, you simply hold the transponder against the correspondingly marked position at the pump.

Already in 2006, more than 6 million customers used Speedpass transponders at over 8500 petrol stations in the United States.

As Speedpass transponders have a different physical interface, they cannot be read by contactless POS readers (13.56 MHz, ISO/IEC 14443) and do not comply with EMV standards. Vice versa, a Speedpass reader cannot communicate with EMV compatible contactless credit cards.

## 13.4 NFC Applications

In 2002, the two companies NXP Semiconductors (then still Philips' semiconductor operation) and Sony began to jointly develop a new RFID technology, *near-field communication (NFC)*. NFC provides a technology that makes it possible simply to add a very flexible RFID interface to electronic devices (see Section 11.6). NFC supports different operational modes, *active mode* and *passive mode* (see Section 3.4). An *NFC device* can behave externally both as a contactless smart card (card emulation) and as a reader (reader emulation) or it can even realise a data link between NFC devices (peer-to-peer). NFC is specified according to standards *ISO/IEC 18092* NFCIP-1 (ECMA 340) and *ISO/IEC 21481* NFCIP-2 (ECMA 352) (Philips Semiconductors, 2006). In addition, NFC is compatible with *MIFARE*, a common NXP contactless smart card technology, and with *FELICIA*, Sony's contactless smart card system (Grassie, 2007) as well as with all ISO/IEC 14443-A-specified transponders and readers.

NFC application can be divided into different categories (Peleschka, 2006):

- *Touch and Go:* in this category we find applications such as access control systems, logistics reporting systems or security technology as well as ticketing systems. Here the NFC device behaves like a contactless smart card that contains an access code or ticket and has only to move quickly past the reader.
- *Touch and Confirm:* applications such as mobile payment where the user has to confirm the interaction by pressing a button or entering a PIN into the NFC device.

- *Touch and Capture:* here, the NFC device is located close to the transponder (smart label) which for instance can be attached to a smart poster. The NFC device can read out transponders for information such as phone numbers or a URL for further information.
- *Touch and Link:* applications that require an online connection of the NFC device. Data read by the NFC interface are forwarded via an online connection (GPRS, UMTS) to a server. The server can process these data and send back information to the NFC device where it is shown on the display.
- *Touch and Connect:* a connection of two NFC devices for transmitting images, MP3 files or simply for matching phone directories of two NFC-enabled mobile phones.
- *Touch and Explore:* it is possible to randomly combine the above categories. Touch and Explore allows the user to intuitively 'find and explore' new applications (Peleschka, 2006).

There are clear signs that in the future the mobile phone will be *the* personal NFC device. As most people carry their mobile phones on them all the time there is a valuable additional benefit if everyday services can be provided through an NFC-enabled mobile phone. Starting in 2005, throughout the world NFC applications are being introduced.

NFC devices are most easily used in applications that already dispense with of a reader infrastructure. Therefore, contactless smart cards of a public transportation ticket application can be easily replaced by NFC-enabled mobile phones. The phone's NFC interface takes on the function of the contactless smart card, with the ticket data sets being safely stored in a secure element.

However, the special advantage of mobile phones is that, via the GSM interface, new additional functions and services can be offered that may lead to novel business models. *OTA services* (OTA = over the air) can administer data in the secure element of an NFC-enabled phone. OTA services make use of the mobile's option to transmit data via GPRS or UMTS. Using OTA services ensures secrecy of personalization data due to strong encryption and authentification (Johne, 2008). This way it is possible for public transportation businesses to use OTA services to automatically send customers an electronic monthly season ticket at the beginning of the month which the customer can save in his or her NFC phone. Even a single ticket that was ordered with the Internet browser

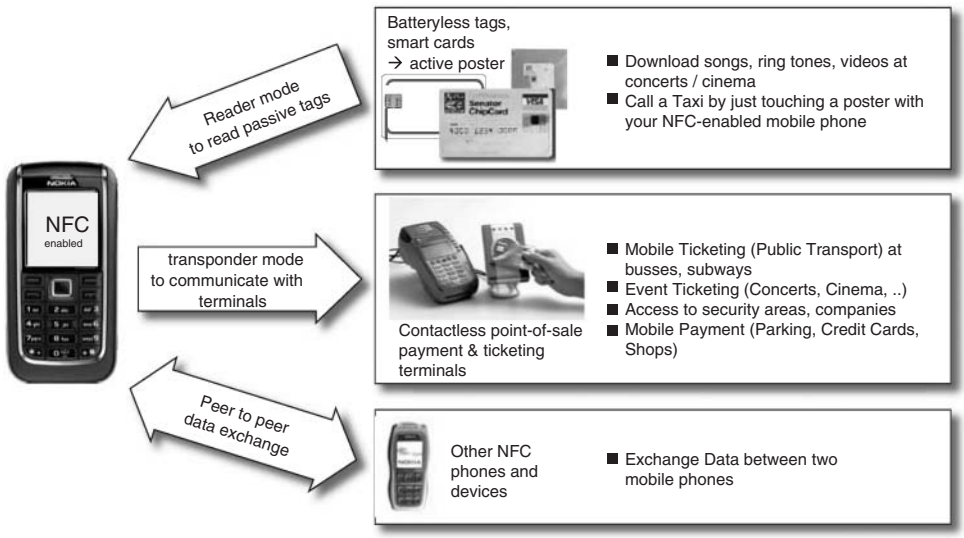


**Figure 13.12** NFC provides three different operating modes with a variety of applications

**Figure 13.13** The electronic public transportation ticket get ≫ in, which allows customers to check in and out of busses using their mobile phones and NFC technology (reproduced by permission of © RMV)

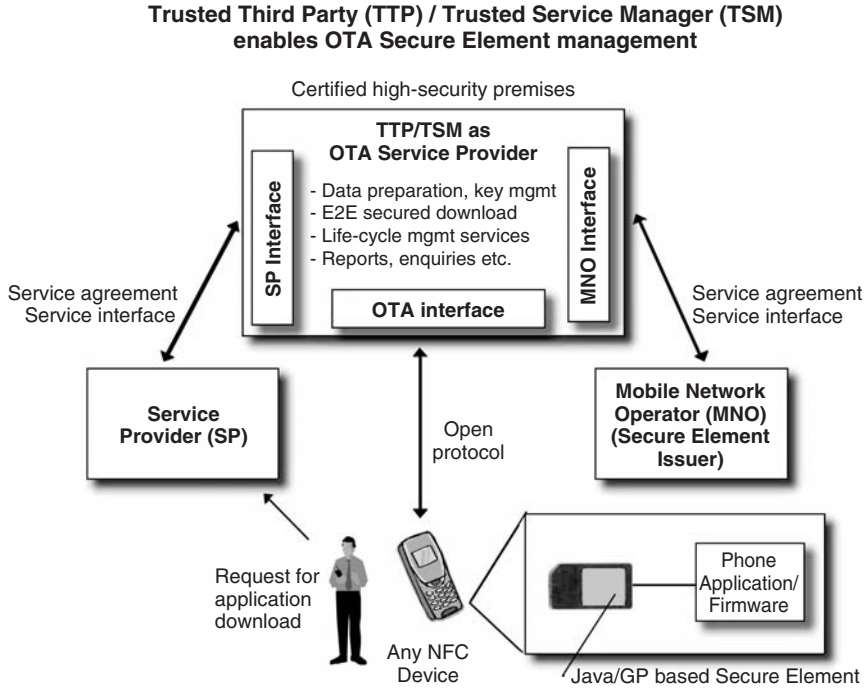


**Figure 13.14** Administration of the secure element of an NFC-enabled phone via OTA service (Yliutinen, 2007; figure Venyon)

of a modern mobile phone could be directly transmitted to the *secure element* of the mobile after processing the order with OTA services; and it will be immediately available to the user.

NFC-enabled mobile phones could even be used to implement applications that are problematic regarding the installation and networking of the readers (e.g. in vehicles) or that are too expensive (if the target is nationwide coverage, for instance). Here, the stationary reader and portable transponder simply switch their traditional roles. This is the case of the project *Touch and Travel* introduced in 2005 by *Deutsche Bahn AG* where NFC-enabled mobile phones can be used as tickets for long-distance travel. Railway stations that are part of the Touch and Travel network only need to be equipped with passive transponders (ISO/IEC 14443) that are located in eye-catching '*touchpoints*'.

To buy a valid ticket, the previously registered customer starts a specific application – the Touch and Travel applet – on an NFC-enabled mobile phone immediately prior to the journey and moves the phone into the reading range of the touchpoint transponder. The Touch and Travel applet now builds an online connection via mobile phone to a Deutsche Bahn data centre, transmits the data read out of the transponder to a server and writes some of the data received by the server into the mobile phone's secure element. This way the customer is booked into the system and the railway station where the touchpoint was read is entered as departure station of the forthcoming journey (Spitz, 2007).

The booking data set entered into the secure element now constitutes a valid ticket and can be easily verified by the conductor with a portable reader. At the end of the journey, the customer simply goes to the nearest touchpoint and repeats the reading procedure. This way, the customer checks out of the system, the journey is registered as ended and the corresponding price is calculated (Spitz, 2007).

Even for payment transactions, the use of NFC phones opens up completely new opportunities. An NFC mobile phone that is used for payment simulates contactless credit or debit cards (card emulation mode). The POS terminal cannot distinguish whether the card holder uses a contactless card or an NFC phone with the corresponding payment application. The advantage is obvious: If the POS terminal includes a contactless reader NFC technology can be accepted for payment without any additional efforts. This does not affect the processing of the payment with NFC phones as the existing infrastructure (see Section 13.3) can be used.

**Figure 13.15** The RMV-ConTag – a passive transponder – can start the RMV-HandyTicket (mobile ticket) and the corresponding current timetable information. The mobile phone can load down the current data via an online connection (reproduced by permission of © RMV/Müller)

**Figure 13.16** The touchpoint only has a passive transponder that can be read out by an NFC-enabled mobile phone (reproduced by permission of Deutsche Bahn)

**Figure 13.17** An NFC-enabled mobile phone with the corresponding payment application simulates a contactless credit or debit card (reproduced by permission of LEGIC Identsystems AG, CH-Wetzikon)

This way, NFC phones have turned into credit or debit cards. They can be easily used for payment transactions. Even if the battery is empty, NFC phones can still be used for paying as the POS terminal contactlessly provides the necessary power to the NFC chip.

Differences become obvious when the 'credit card in the phone' supports additional functions that traditional cards do not have. An NFC-enabled phone is, strictly speaking, a highly complex

IT system and can store several card data sets in the secure element (see Section 11.6.1), i.e. also several credit and debit cards of different payment systems. During the payment process, the 'card holder' (i.e. the phone user) only has to select a preferred card or has the option to previously make this selection with a special menu entry in the NFC phone. Other possible functions include the temporary inactivation of the card; for instance, if you lend the phone to somebody else who is not supposed to use the stored credit cards (Johne, 2008).

OTA services can be used to personalize the secure element with personal credit card data and extend an existing expired card. If the owner of an NFC-enabled phone registers the phone as lost and wants to remotely inactivate the card functions he or she can easily use OTA services to do so.

## 13.5 Electronic Passport

Since November 2005, Germany has issued electronic passports, the *ePass*. Thus Germany is, together with several other countries, one of the forerunners regarding the Europe-wide introduction of ePassports based on EU Directive 2252/2004 (Amtsblatt der Europäischen Union, 2004) which had to be implemented by all 24 EU member states by August 2006 (Seidel, 2005). Also outside the EU, several countries, such as Japan, Singapore and the US, are about to introduce electronic passports. These passports are marked as *electronic passports* with a stilisied chip on the outside cover.

The ePassport itself consists of a contactless microprocessor chip that – together with the antenna – is laminated into the passport data page or integrated into the passport cover (see Figure 13.19). The purpose of the contactless microchip is to improve passport security against forgery. In 2002, i.e. prior to the introduction of ePassports, 290 completely forged passports were detected. The content of another 394 passports was forged (Sietmann, 2005).

The first stage of EU ePassports defines that the RFID chip stores as person-related data the name, date of birth, as well as gender, and as a *biometric feature* a photograph of the passport

**Figure 13.18** Position and design of the RFID antenna in ePassports. The microprocessor chip can be recognized as a small black point over the passport photograph. (reproduced by permission of Giesecke & Devrient GmbH, Munich)

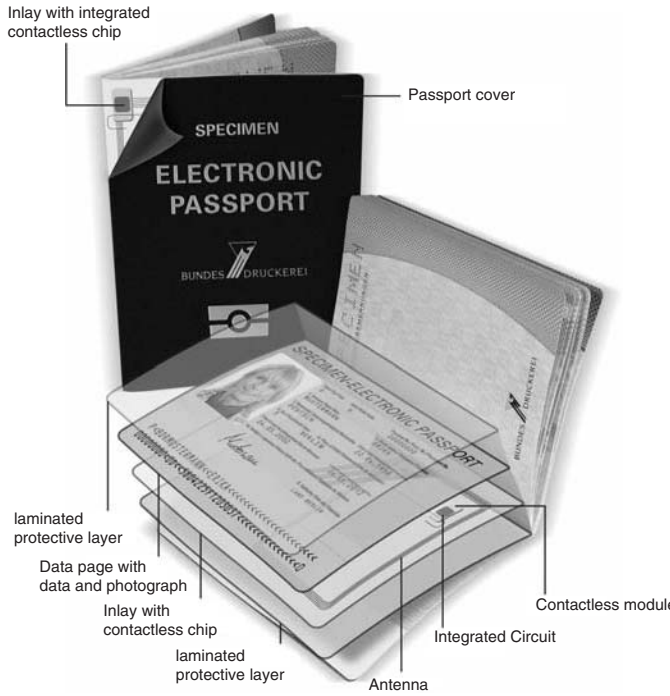


**Figure 13.19** The RFID chip can be integrated either into the data page or into the passport cover (reproduced by permission of Bundesdruckerei GmbH, Berlin)

holder. As a second stage, the RFID chip of EU passports stores another biometric feature, the *fingerprint* of the passport holder. By 2008, all airports and boarder controls had to be equipped with readers for the new ePassports.

The technical specifications of the biometric passport follow the recommendations of the New Technologies Working Group (*NTWG*) of the International Civil Aviation Organization (*ICAO*). Germany is represented in the Board by the Federal Ministry for Internal Affairs (*BMI*) and technically supported by the Federal Criminal Police Office (*BKA*) and the Federal Office for Information Security (*BSI*, http.//www.bsi.bund.de). Specifications are publicly available via the ICAO website (http://icao.org/mrtd). During border controls, readers and passports of different countries have to be compatible; otherwise it will not be possible to achieve the intended international interoperability of ePassport readability in international cross-border traffic. For this reason, the ICAO initially defined only minimum requirements for biometric passports. Internationally, only the photograph of the face is compulsory as a biometrical feature for all countries (Bundesministerium des Innern, n.d.). Since 2008 EU ePassports have included the passport holder's fingerprints.

An important part of ICAO specifications are the contactless interface and the data organization on the RFID chip. The contactless interface of ePassports complies with standard *ISO/IEC 14443*. The rated reading range of an ePassport is 10 cm. In order to achieve short reading times data transmission between ePassport and reader should support, in addition to the default bitrate of 106 kBit/s, also higher bitrates of up to 848 kBit/s according to ISO/IEC 14443. For the ePassports issued in Germany, the *serial number* required for the *anticollision algorithm* according to ISO/IEC 14443 is generated on a random basis in order to prevent the tracking of ePassports, which would be possible with fixed and obvious serial numbers.

| | | | | |
|---|---|---|---|---|
| | **Issuing State or Organization Recorded Data** | | | |
| Mandatory | Details Recorded in MRZ | DG1 | Document Type | |
| | | | issuing State or organization | |
| | | | Name (of Holder) | |
| | | | Document Number | |
| | | | Check Digit - Doc Number | |
| | | | Nationality | |
| | | | Date of Birth | |
| | | | Check Digit - DOB | |
| | | | Sex | |
| | | | Date of Expiry or Valid Until Date | |
| | | | Check Digit - DOE/VUD | |
| | | | Optional Data | |
| | | | Check Digit - Optional Data Field | |
| | | | Composite Check Digit | |
| Optional | Encoded Identification Features | Global Feature | DG2 | Encoded Face |
| | | Optional | DG3 | Encoded Fingers |
| | | | DG4 | Encoded Eyes |
| | Displayed Identification Features | DG5 | Displayed Portrait | |
| | | DG6 | Reserved for Future Use | |
| | | DG7 | Displayed Signature of Usual Mark | |
| | Encoded Security Features | DG8 | Data Features | |
| | | DG9 | Structure Features | |
| | | DG10 | Substance Features | |
| | | DG11 | Additional Personal Details | |
| | | DG12 | Additional Document Details | |
| | | DG13 | Optional Details | |
| | | DG14 | Reserved for Future Use | |
| | | DG15 | Active Authentication Public Key Info | |
| | | DG16 | Persons to Notify | |

| | | | |
|---|---|---|---|
| | **Receiving State and Approved Receiving Organisation Recorded Data** | | |
| Option. | | DG17 | Automated Boarder Clearance |
| | | DG18 | Electronic Visas |
| | | DG19 | Travel Records |

**Figure 13.20** Data organisation in the contactless chip of ePassports

Figure 13.20 shows the data organization on the contactless chip. Data group 1 (DG1) saves all data that is printed on the *machine-readable zone (MRZ)* of the passport's data page. Data group 2 (DG2) stores a digital copy of the passport photograph in JPEG2000 format. The finger prints of the passport holder are to be saved in data group 3 (DG3), also as an image. The other data groups are optional and are currently not being used.

A minimum memory of 32 kByte EEPROM is necessary to be able to save all required data on the chip. German ePassports use the following two contactless *microprocessors*: Infineon SLE 66CLX641P (64 kByte) and Philips Smart MX P5CT072 (72 kByte) (CCC, 2005).

Integrity and authenticity of the data stored on the RFID chip is secured by a *digital signature*. This way it is possible to detect false or manipulated data. Authorized entities, e.g. printing companies, that also produce the physical documents use a secret code for signing the electronic documents. A public code – which in turn has to be certified by the c*ountry signing certification authority* of the issuing country – is used to verify the electronic documents (BSI, 2005).

As long as the ePassport is closed the data on the contactless chip should be protected against unauthorized read access. If the ePassport is handed over to a border-control official, it should be possible to read it, though. The ePass should therefore emulate the characteristics of current

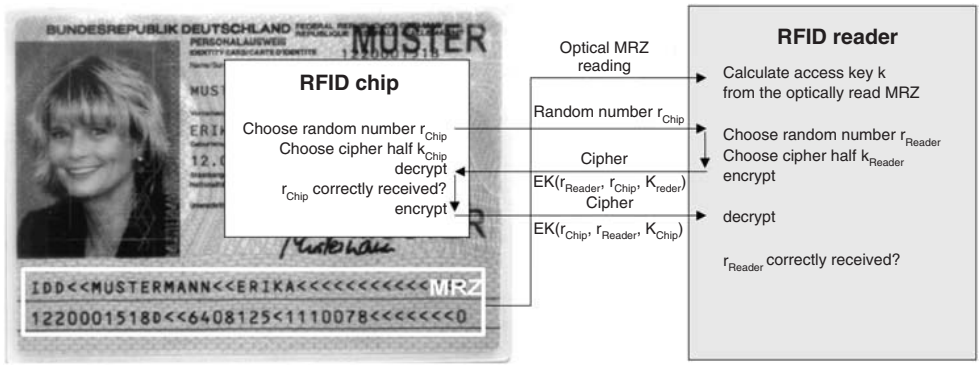


**Figure 13.21** Basic access control simulates the behaviour of current passports

passports. *Basic access control* (BAC) technically implements this behaviour in order for the reader to actually have optical access to the passport's data pages.

If the ePassport is put on a reader, at first it optically reads the data of the machine-readable zone (MRZ). The MRZ fields, which are secured against reading errors by a check digit, i.e. passport number, the passport holder's date of birth and the date of expiry of the passport, are used to calculate access code $k$ (see Figure 13.21). This code initiates the mutual authentication of reader and ePassport. The successful completion of this process is a prerequisite for reading the data groups (BSI, 2005).

## 13.6 Ski Tickets

Anyone entering a *ski lift* has to be in possession of a valid daily or weekly pass. These tickets were originally made of cardboard and validated by a date stamp. Checking paper tickets is very labour intensive because each ticket must be checked visually for validity. Furthermore, it is inconvenient for individual skiers to have to fish around in their anoraks with cold fingers for a sodden paper ticket before every journey on the lift.

RFID technology offers an ideal alternative by replacing paper tickets with contactless smart cards or disk transponders (Figure 13.22). When the transponder is sold a deposit of €5–10 is usually retained. After use, the transponder can be returned and the deposit refunded. The lift operator can revalue the transponder using special readers and it can thus be reused.

The read range of the system is designed to be great enough that the transponder tickets no longer need to be held in the hand, but can remain in an anorak pocket.

All ski lift entrances are protected by a turnstile, which is released by the read electronics upon detection of a valid transponder. In order to read the skier's transponder, however it is carried, every entrance is monitored by two antennas opposite each other.

The size of the magnetic antenna is a problem, because it must be very large due to the desired read range. The resulting magnetic coupling between the two reader antennas is so great at a distance of several metres that the resulting mutual interference makes it impossible to read a transponder. To circumvent this problem, ski ticket systems activate only one reader at a time, while the RF field of all other readers is switched off altogether. To achieve this, a multiplexer sends a start signal to one reader after the other in a cyclical sequence, which causes the addressed reader to switch on its RF field and check for the presence of a transponder (Figure 13.23). If the reader discovers a transponder, then it activates a *busy signal*. The busy signal tells the control unit to

**Figure 13.22** Contactless reader as access control and till device at a ski lift (reproduced by permission of LEGIC Identsystems AG, CH-Wetzikon)

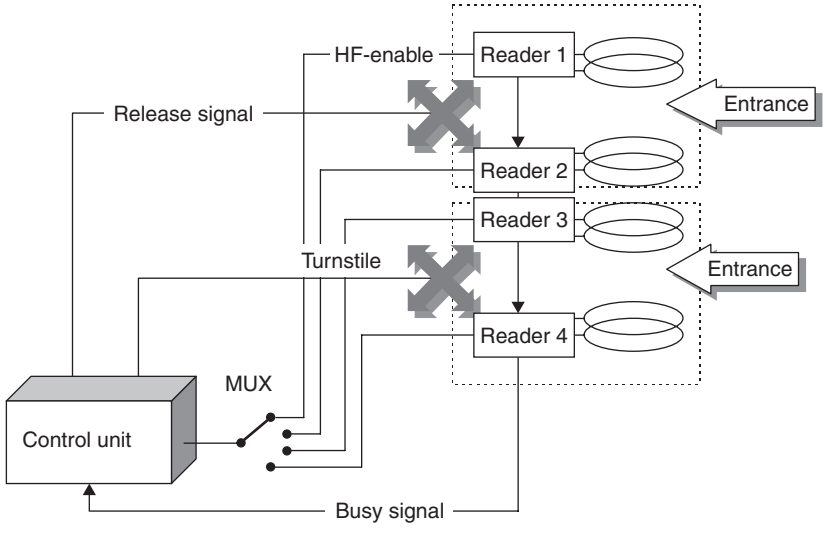


**Figure 13.23** To achieve mutual decoupling the readers are switched alternately in time- division multiplex operation

suppress the cyclical start signal for the duration of the busy signal. The active reader is now free to perform the data exchange it has begun with the transponder. After the end of this transaction, the active reader stops transmitting the busy signal, whereupon the multiplexer can continue its cyclical interrogation.

## 13.7 Access Control

Electronic access control systems using data carriers are used to automatically check the *access authorisation* of individuals to buildings, (commercial or event) premises, or individual rooms. When designing such systems we must first differentiate between two fundamentally different systems with corresponding properties: online and offline systems.

### *13.7.1 Online Systems*

Online systems tend to be used where the access authorization of a large number of people must be checked at just a few entrances. This is the case, for example, at the main entrances to office buildings and commercial premises. In this type of system, all terminals are connected to a central computer by means of a network. The central computer runs a database in which each terminal is assigned all the data carriers authorised for access to that terminal. The authorisation data generated from the database is loaded into the terminals (or into an intermediate door control unit) via the network and saved there in a table.

Changes to an individual's access authorisation can be made by a single entry on the central computer of the access control system. The data carrier itself does not need to be present, since only an entry in the central database has to be edited. This is advantageous, because it means that sensitive security areas can be protected against unauthorised access, even in the event of a data carrier being lost.

The data carriers of an online system only have to be able to store a small amount of data, for example a unique pass number. The use of read-only transponders is also possible.

### *13.7.2 Offline Systems*

Offline systems have become prevalent primarily in situations where many individual rooms, to which only a few people have access, are to be equipped with an electronic access control system. Each terminal saves a list of key identifiers (e.g. 'general-key-3', 'floor-waiter-7', 'guest-room-517'), for which access to this terminal is to be authorised. There is no network to other terminals or a central computer.

**Figure 13.24** Access control and time keeping are combined in a single terminal. The watch with an integral transponder performs the function of a contactless data carrier (reproduced by permission of Legic®-Installation, Kaba Security Locking Systems AG, CH-Wetzikon)

**Figure 13.25** Offline terminal integrated into a doorplate. The lock is released by holding the authorized transponder in front of it. The door can then be opened by operating the handle. The door terminal can be operated for a year with four 1.5 V Mignon batteries and even has a real time clock that allows it to check the period of validity of the programmed data carrier. The terminals themselves are programmed by an infrared data transmission using a portable infrared reader (reproduced by permission of Häfele GmbH, D-Nagold)

Information regarding the rooms to which the data carrier can provide access is stored on the data carrier itself in the form of a table of key identifiers (e.g. 'guest-room-517', 'sauna', 'fitness-room'). The terminal compares all the key identifiers stored on a data carrier with those stored in its own list and permits access as soon as a match is found. The transponder is programmed at a central *programming station*, for example at the reception of a hotel upon the arrival of the guest. In addition to the authorised rooms, the transponder can also be programmed with the duration of validity, so that hotel keys, for example, are automatically invalidated on the departure date of the guest.

Only in the event of a data carrier being lost do key identifiers need to be deleted from the terminal in question using a suitable programming device.

Offline systems offer the following advantages over conventional lock systems with key and cylinder (Koch and Gaur, 1998):

- Early specification on a lock plan in the normal sense is not necessary. The system is initially coded for use as a 'building-site'. When the site is handed over, the door terminals are recoded for commercial use by means of an infrared interface. Subsequent changes and expansions do not pose any problems.

- The option of programming time windows opens up further options: Temporary employees can receive a 'three-month key', the data carriers of cleaning staff can be given precise time specifications (for example Mondays and Fridays from 17.30 to 20.00).
- The loss of a key causes no problems. The data of the lost key is deleted from the read stations, a new key is programmed, and this key's data is entered on the terminals in question.

### *13.7.3 Transponders*

*Access control* using PVC cards has been around for a long time. Punched cards were used initially, which were superseded by infrared passes (IR barcode), magnetic strip passes, Wiegand passes (magnetic metal strips), and finally smart cards incorporating a microchip (Schmidhäusler, 1995; Virnich and Posten, 1992). The main disadvantage of these procedures is the inconvenience of the operating procedure due to the fact that the cards must always be inserted into a reader the right way round. Access control using contactless systems permits much greater flexibility because the transponder only needs to pass a short distance from the reader antenna. Passes can be made in the form of contactless smart cards, key rings, and even wrist watches.

A great advantage of contactless access control systems is that the reader is maintenance-free and is not influenced by dust, dirt or moisture. The antenna can be mounted beneath the surface of a wall, where it is completely invisible and protected against vandalism. Hands-free readers are also

**Figure 13.26** The hotel safe with integral offline terminal can only be opened by an authorised data carrier (reproduced by permission of Häfele GmbH, D-Nagold)

available for mounting in turnstiles or to increase convenience. In these designs, the transponders do not even need to be removed from the pocket or jacket clip.

Cat flaps operated by a transponder in the cat's collar represent another application in the field of access control, as does the use of read-only transponders as anti-theft sensors for opening or closing doors and windows (Miehling, 1996).

## 13.8 Transport Systems

### *13.8.1 Eurobalise S21*

Although Europe is moving towards standardisation, cross-border transport still presents an obstacle to Europe's railways. Different signals and train security systems force trains to incur the cost of carrying multiple sets of equipment on locomotives and traction units. It is often necessary to expend precious time changing traction vehicles at the border, burdening trains with a disadvantage compared with flying or travelling by road (Lehmann, 1996).

For this reason, the European Union is backing the purchase of a unified European train security and control system, the *ETCS* (European Train Control System). The ETCS will facilitate interoperable cross-border traffic and improve the competitiveness of railways by implementing the latest train control technology.

The ETCS comprises four main systems:

- *EURO-Cab.* A vehicle device, in which all connected elements are linked to the secure vehicle computer EVC (European Vital Computer) by a special ETCS bus system.
- *EURO-Radio.* A GSM radio link between the vehicles and a radio centre by the track, the RBC (Radio Block Center).
- *EURO-Loop.* A system for linear data transfer over distances up to several hundred metres. The system is based upon so-called leakage cables, i.e. coaxial cables for which the sheathing is designed to be partially permeable to the electromagnetic field. The frequency ranges of this application lie between around 80 MHz and 1 GHz (Ernst, 1996). EURO-Loop is primarily used to transfer information for the evaluation of discretely transmitted data.
- *Eurobalise.* A system for the discrete transmission of data. Depending upon design, local data (location marking, gradient profiles, speed limits) or signal-related data for the route are transmitted to the vehicle (Lehmann, 1996).

The *Eurobalise* subsystem is particularly important, because it is a crucial prerequisite for the full introduction of the ETCS. In January 1995, after lengthy experiments, the technical framework data for Eurobalise were determined. It is an inductively coupled RFID system with anharmonic feedback frequency.

The power supply to the system is taken from a passing traction unit by inductive coupling at the ISM frequency 27.115 MHz. Data is transferred to the tractive unit at 4.24 MHz, and the system is designed to reliably read the data telegram at train speeds of up to 500 km/h.

Four different balise types have been developed by Siemens:

- Type 1 transmits a permanently programmed telegram.
- Type 2 transmits a telegram that can be programmed by the user via the contactless interface. For example, this may be line data such as gradient and speed profiles.
- Type 3 transmits a telegram generated by a line device (transparent balise). Type 3 is primarily used in connection with signals.
- Type 4 makes it possible to download data as vehicles drive past.

**Figure 13.27** Eurobalise in practical operation (reproduced by permission of Siemens Verkehrstechnik, Braunschweig)

**Table 13.3** Basic data for Eurobalise

| Coupling | Inductive |
|---|---|
| Power transmission frequency, vehicle → balise | 27.115 MHz |
| Data transmission frequency, balise → vehicle | 4.24 MHz |
| Modulation type | FSK |
| Modulation index | 1 |
| Data rate | 565 Kbit/s |
| Telegram length | 1023 or 341 bit |
| Useful data size | 863 or 216 bit |
| Read distance | 230–450 mm |
| Maximum sideways offset | 180 mm |
| Coverage with snow, water, ore | Noncritical |

**Figure 13.28** Fitting a read antenna for the Eurobalise onto a tractive unit (reproduced by permission of Siemens Verkehrstechnik, Braunschweig)

## *13.8.2 International Container Transport*

International freight transport containers have been identified using the alphanumeric identification procedure specified in the international standard ISO 6346 since the end of the 1960s. This identification mark consists of four letters, the owner's code, a six-digit numeric serial number and a test digit, and is painted onto the outside of the container at a specified position.

Almost all of the 7 million containers in use worldwide employ the identification procedures specified in this standard and thus have their own, unmistakable identification number. The process of manually recording the container identification number and entering it into the computer of a transhipment plant is extremely susceptible to errors. Up to 30% of identifications have been falsely recorded at some point. Automatic data transmission can help to solve this problem by the reading of a transponder attached to the container. In 1991 the international standard ISO 10374 was drawn up to provide a basis for the worldwide use of this technology.

The bands 888–889 MHz and 902–928 MHz (North America) and 2.4–2.5 GHz (Europe) are used as the operating frequencies for the transponders. The transponders must respond on all three of the frequency ranges used. Backscatter modulation (modulated reflection cross-section) with an FSK modulated subcarrier is the procedure used for the data transfer from the container to the

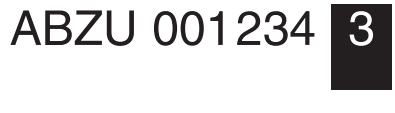


**Figure 13.29** Container identification mark, consisting of owner's code, serial number and a test digit

reader. The subcarrier frequencies are 20 and 40 kHz. A total of 128 bits (16 bytes) are transmitted within just 2 ms.

The reader's signal is not modulated (read-only transponder). The specified maximum reader distance is 13 m.

ISO 10374 specifies the following information that can be stored in the transponder:

- owner's code, serial number and test digit;
- container length, height and width;
- container type, i.e. suitcase container, tank container, open top container and others;
- laden and tare weight.

A battery provides the power supply to the electronic data carrier in the transponder (active transponder). The lifetime of the battery corresponds to the lifetime of the container itself, i.e. around 10–15 years.

The same technology is used in the identification of goods wagons in North American and European railway transport. A European standard is in preparation for the automatic identification of European interchangeable containers (Siedelmann, 1997).

## 13.9 Animal Identification

### *13.9.1 Stock Keeping*

Electronic identification systems have been used in stock keeping for almost 20 years (Kern and Wendl, 1997) and are now state of the art in Europe. In addition to internal applications for automatic feeding and calculating productivity, these systems can also be used in inter-company identification, for the control of epidemics and quality assurance, and for tracing the origin of animals. The required unified data transmission and coding procedures are provided by the 1996

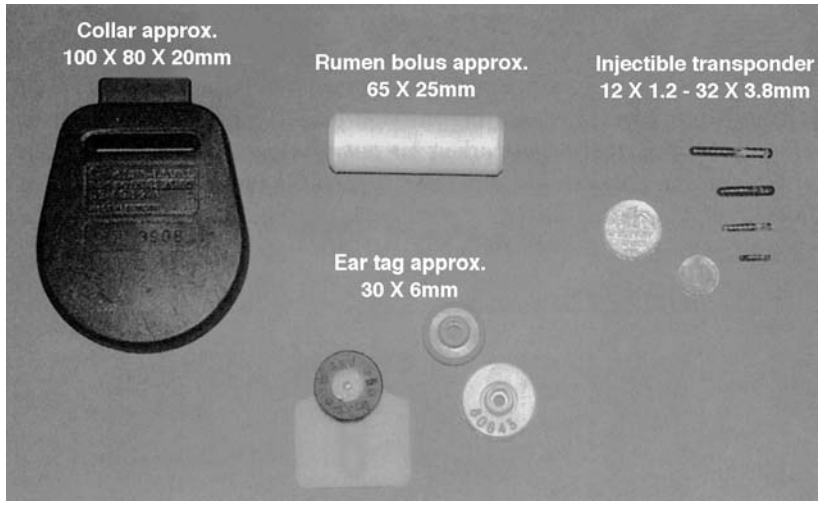


**Figure 13.30** Size comparison of different variants of electronic animal identification transponders: collar transponder, rumen bolus, ear tags with transponder, injectible transponder (reproduced by permission of Dr Michael Klindtworth, Bayrische Landesanstalt für Landtechnik, Freising)

ISO standards 11784 and 11785 (see Section 9.1). The specified frequency is 134.2 kHz, and FDX and SEQ transponders can both be used.

There are four basic procedures for attaching the transponder to the animal: collar transponders, ear tag transponders, injectible transponders and the so-called bolus (Figure 13.31). Cross-sections of different types of transponders are shown in Figure 13.32.

*Collar transponders* can be easily transferred from one animal to another. This permits the use of this system within a company. Possible applications are automatic feeding in a feeding stall and measuring milk output.

*Ear tags* incorporating an RFID transponder compete with the much cheaper barcode ear tags. However, the latter are not suitable for total automation, because barcode ear tags must be passed a few centimetres from a hand reader to identify the animal. RFID ear tags, on the other hand, can be read at a distance of up to 1 m.

*Injectible transponders* were first used around 10 years ago. In this system, the transponder is placed under the animal's skin using a special tool. A fixed connection is thereby made between the animal's body and the transponder, which can only be removed by an operation. This allows the use of implants in inter-company applications, such as the verification of origin and the control of epidemics.

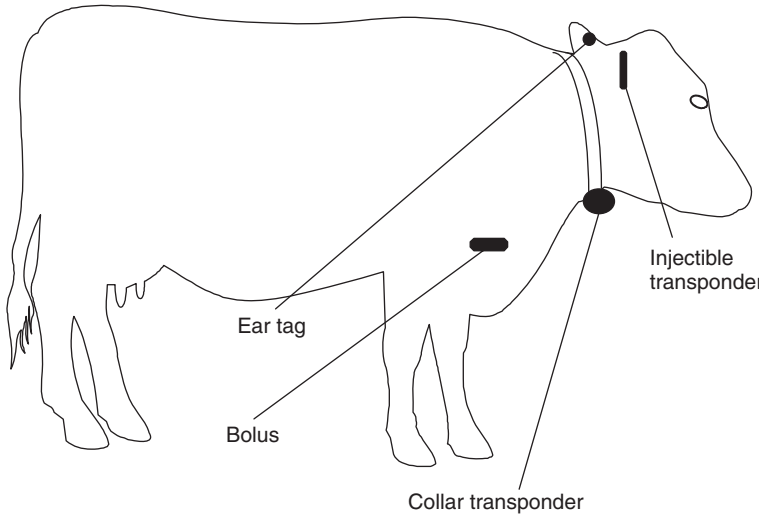


**Figure 13.31** The options for attaching the transponder to a cow

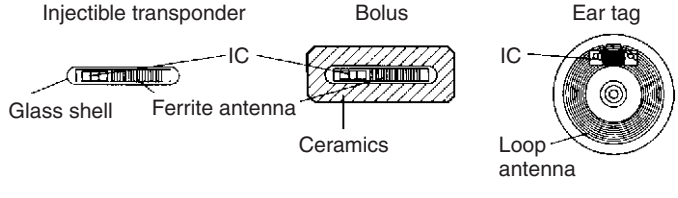


**Figure 13.32** Cross-sections of various transponder designs for animal identification (reproduced by permission of Dr Georg Wendl, Landtechnischer Verein in Bayern e.V., Freising)

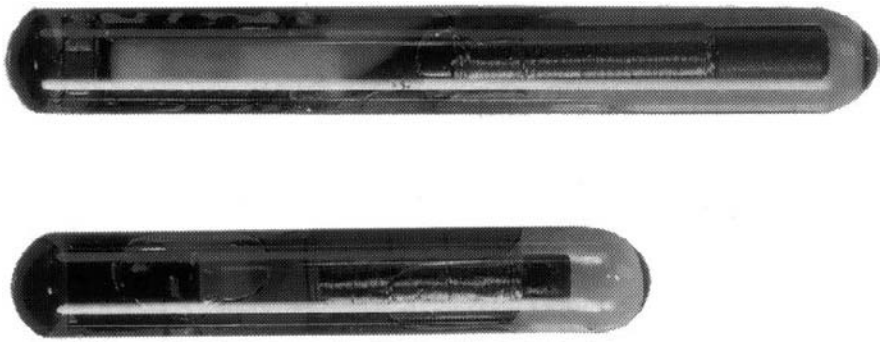

**Figure 13.33** Enlargement of different types of glass transponder (reproduced by permission of Texas Instruments)

The implant is in the form of a glass transponder of length 10, 20 or 30 mm (Figure 13.33). The transponder is supplied in a sterile package or with a dose of disinfectant. The dimensions of the glass transponder are amazingly small, considering that they contain the chip and a coil wound around a ferrite rod. A typical format is 23.1 × 3.85 mm (Texas Instruments, 1996).

Various instruments and *injection needles* are available for performing the injection:

'Single-shot' devices use closed hollow needles ('O' shape), which are loaded individually. Single-use needles containing transponders in a sterile package are also available. The hollow needles are sharpened at the tip, so that the skin of the animal is ripped open when the needle is inserted. The blunt upper part of the needle tip presses the cut flap of skin to one side so that the insertion point is covered up again when the needle has been removed, allowing the wound to heal quickly (Kern, 1994).

The 'Multi-shot' device has a magazine for several transponders, thus dispensing with the need to load the device. Open-ended hollow needles (U-shaped) are used, as these are easier to clean, disinfect and check than closed hollow needles and can therefore be used several times.

**Figure 13.34** Injection of a transponder under the scutulum of a cow (reproduced by permission of Dr Georg Wendl, Landtechnischer Verein in Bayern e.V., Freising)

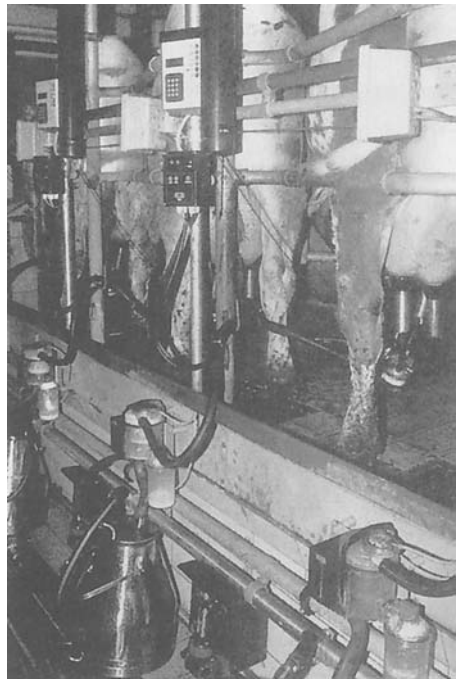

**Figure 13.35** Automatic identification and calculation of milk production in the milking booth (reproduced by permission of Dr Georg Wendl, Landtechnischer Verein in Bayern e.V., Freising)

The injection does not hurt the animal and can be carried out by practised laymen. However, attention should be given to hygiene to ensure that the wound heals safely.

An injected transponder represents a foreign body in the animal's tissues. This can lead to problems in the locational stability of the transponder within the animal's body, and may therefore cause problems when reading the transponder. From our experience of war injuries we know that shrapnel can often wander several decimetres through the body during a person's lifetime. An injected transponder can also 'wander' around. To solve this problem, the Bayerischen Landesanstalt für Landtechnik in Weihenstephan, a branch of the Technical University in Munich, has been investigating various injection sites since 1989 (Kern, 1994). As a result of these studies, injection under the *scutulum* is currently favoured over the use of the right ear, with the injection being directed towards the occipital bone. According to findings of the Landanstalt, this position is also suitable for measuring the animal's body temperature.

The so-called *bolus* is a very useful method of fitting the transponder. The bolus is a transponder mounted in an acid-resistant, cylindrical housing, which may be made of a ceramic material. The bolus is deposited in the rumen, the omasum that is present in all ruminants, via the gullet using a sensor. Under normal circumstances the bolus remains in the stomach for the animal's entire lifetime. A particular advantage of this method is the simple introduction of the transponder into the animal's body, and in particular the fact that it does not cause any injury to the animal. The removal of the bolus in the slaughter house is also simpler than the location and removal of an injected transponder (Kern and Wendl, 1997).

It is clear that the injected transponder and the bolus are the only foolproof identification systems available to stock keepers. A more detailed comparison of the two systems (Kern and Wendl, 1997)

**Figure 13.36** Output-related dosing of concentrated feed at an automatic feed booth for dairy cows. In the illustration the cow is identified by the transponder at its neck (reproduced by permission of Dr Georg Wendl, Landtechnischer Verein in Bayern e.V., Freising)

**Figure 13.37** Oral application of a bolus transponder (reproduced by permission of Dr Michael Klindtworth, Bayerische Landesanstalt für Landtechnik, Freising)

shows that the bolus is particularly suited for use in the extensive type of stock keeping that is prevalent in Australia or South America. In intensive stock keeping methods, commonly used in central Europe, both systems appear to be suitable. The degree to which bolus, injection or even RFID ear tags will become the industry standard means of identification remains to be seen. See Geers *et al*. (1997), Kern (1997) and Klindtworth (1998) for further information on the material in this section.

## *13.9.2 Carrier Pigeon Races*

Participating in races is a significant part of carrier pigeon breeding. In these races, hundreds of pigeons are released at the same place and time, at a location a long distance from their home.

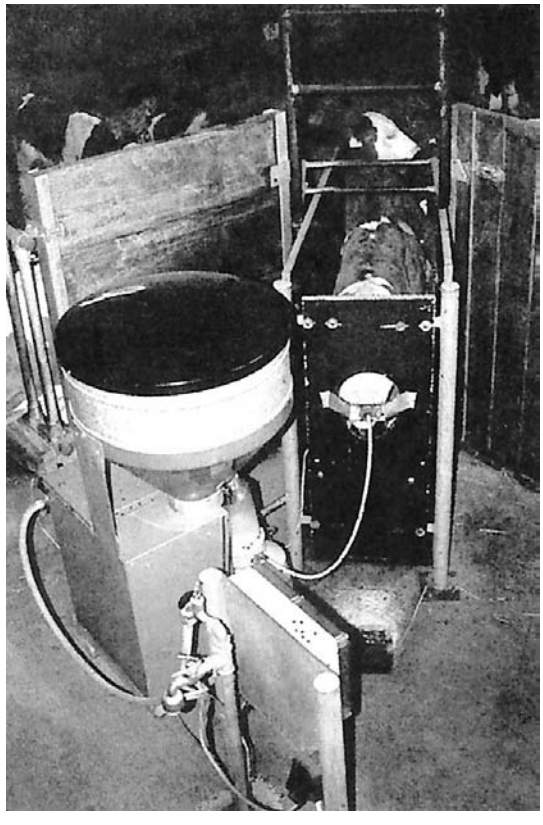

**Figure 13.38** Example of automated animal recognition in practice: grouping calves properly for feeding often requires much time and effort. Here a machine takes on this task: the animals can receive an individually adjustable amount of milk in several small portions (reproduced by permission of Dr Michael Klindtworth, Bayerische Landesanstalt für Landtechnik, Freising)

Pigeons are judged by the time they take to return home from the point where they were released. One problem is the reliable recording (confirmation) of arrival times, because in the past the breeders themselves recorded the times using a mechanical confirmation clock.

To solve the problem of timing, the pigeons are fitted with rings that incorporate a read-only transponder based upon a glass transponder. As the pigeons are loaded onto the transporter for transport to the release site, the serial numbers of the transponders are read to register the animals for participation in the race. Upon the pigeon's arrival at its home pigeon loft a reader installed in the compartment records the serial number and stores it, together with the precise arrival time, in a portable control unit. Judging takes place by the reading of the devices at the operating point.

However, the ingenuity of some of the breeders was greatly underestimated when this system was first introduced. It was not long before some breeders were not only able to read the transponder codes from the pigeon ring, but could also fool the reader using a simulation device in the home loft. The technology involved was fairly simple – all that was required was an extremely simple read-only transponder, whose 'serial number' could be altered using external DIP switches. Thus, some breeders were able to significantly accelerate the 'flight speeds' of their champions.

An effective measure to protect against such attempts at fraud is the incorporation of an additional writable EEPROM memory into the transponder. The memory size is just 1 byte to keep the chip size and cost of circuitry low. Before the start, a previously determined random number, for which there are $2^8 = 256$ possibilities, is written to this byte in the transponder at the race headquarters. It is crucial that the breeder does not have access to his bird while it is being transported to the release site after the transponder has been programmed. This prevents the random number from being read. When the pigeon reaches its home loft, its arrival is confirmed electronically. The time,

**Figure 13.39** Pigeon upon arrival at its own pigeon loft. Upon the pigeon's entry, the transponder in the ring is read (reproduced by permission of Legic Identsystems, CH-Wetzikon)

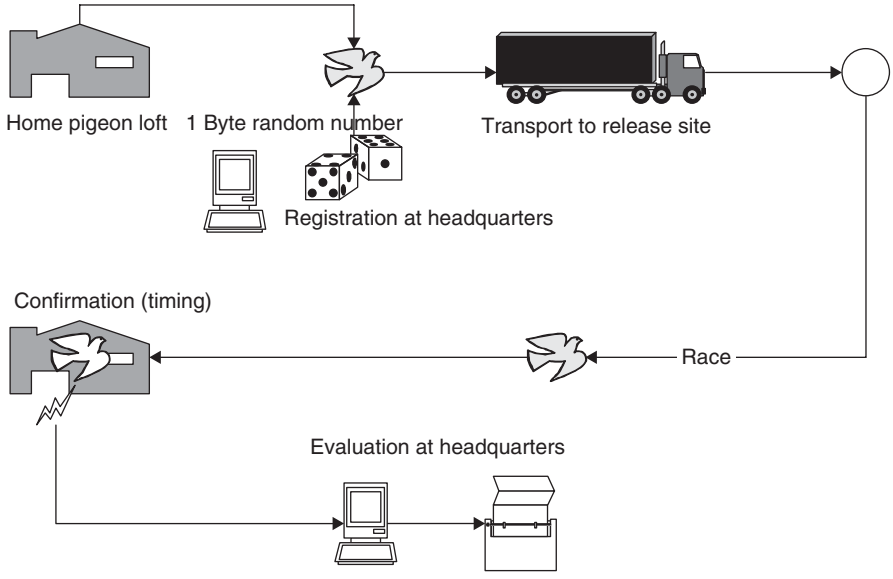


**Figure 13.40** The generation of a random number which is written to the transponder before the start protects against attempted fraud

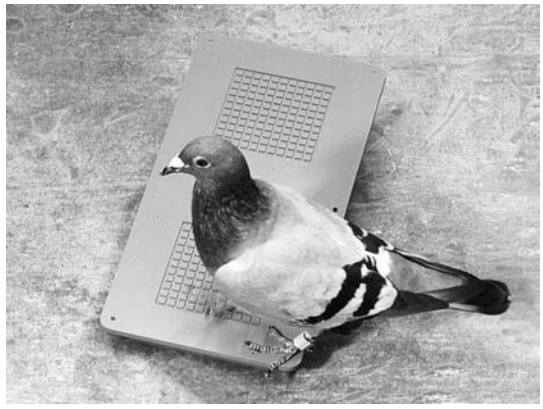

**Figure 13.41** Typical antenna of an electronic confirmation system. The transponder on the pigeon's left leg is also clearly visible (reproduced by permission of Deister Electronik, Barsinghausen)

together with the transponder code and the secret *random number* are stored. When the records are evaluated at the headquarters, the random number read upon arrival is compared with the number programmed at the start. The measured times are only validated if the two figures are identical, otherwise it is assumed that an attempted fraud has taken place.

The procedure described is clearly adequate to successfully prevent attempted fraud. With 256 possibilities for the random number the probability that this will be guessed correctly in a single attempt is only 0.4%.

In order to keep the weight and dimensions of the pigeon transponder low, glass transponders are used in this application, which are cast into a plastic ring. These plastic rings can be fastened to the pigeon's leg without hindering the animal or causing it any discomfort.

## 13.10 Electronic Immobilisation

The sharp rise in *vehicle theft* at the beginning of the 1990s – particularly in Germany – boosted the demand for effective anti-theft systems. Battery-operated remote control devices with a range of 5–20 m had already been available on the market for years. These are small infrared or RF transmitters operating on the UHF frequency 433.92 MHz, which are primarily used to control the central locking system and an integral alarm. An (electronic) immobiliser may also be coupled to the remote control function. In this type of anti-theft device, however, the mechanical lock can still be used to gain access to the vehicle – in case the remote control device fails to work due to the failure of the battery in the transmitter. This is the greatest weakness of this type of system, as the system cannot check whether the mechanical key is genuine. Vehicles secured in this manner can therefore be opened with a suitable tool (e.g. picklock) and started up by an unauthorised person.

Since the middle of the 1990s, transponder technology has provided a solution that can be used to check the authenticity, i.e. the genuineness, of the key. This solution has proved ideal for the realisation of the electronic immobilisation function via the ignition lock. Today, transponder technology is usually combined with the above-mentioned remote control system: the remote control operates the vehicle's central locking and alarm system, while transponder technology performs the immobilisation function.

**Figure 13.42** Ignition key with integral transponder (reproduced by permission of Philips Electronics N.V)

## *13.10.1 The Functionality of an Immobilisation System*

In an *electronic immobilisation* system a mechanical ignition key is combined with a transponder. The miniature transponder with a ferrite antenna is incorporated directly into the top of the key (see Figure 13.42).

The reader antenna is integrated into the *ignition lock* in such a manner that when the ignition key is inserted, the (inductive) coupling between reader antenna and transponder coil is optimised. The transponder is supplied with energy via the inductive coupling and is therefore totally maintenance free. Electronic immobilisers typically operate at a transmission frequency in the LF range 100–135 kHz. ASK modulation is the preferred modulation procedure for the data transfer to the transponder, because it allows reader and transponder to be manufactured very cheaply (Doerfler, 1994). Load modulation is the only procedure used for data transmission from the transponder to the reader.

When the ignition key is turned in the ignition lock to start the vehicle, the reader is activated and data is exchanged with the transponder in the ignition key. Three procedures are employed to check the authenticity of the key.

- *Checking of an individual serial number.* In almost all transponder systems the transponder has a simple individual *serial number* (unique number). If the normal number of binary positions is used, significantly more different codes are available than worldwide car production ($2^{32}$ =

4.3 billion, $2^{48} = 2.8 \times 10^{14}$). Very simple systems (first generation immobilisation) read the transponder's serial number and compare this with a reference number stored in the reader. If the two numbers are identical the motor electronics are released. The problem here is the fact that the transponder serial number is not protected against unauthorised reading and, in theory, this serial number could be read by an attacker and copied to a special transponder with a writable serial number.

- *Rolling code procedure.* Every time the key is operated a new number is written to the key transponder's memory. This number is generated by a pseudorandom number generator in the vehicle reader. It is therefore impossible to duplicate the transponder if this system is used. If several keys are used with one vehicle then each key runs through its own pseudorandom sequence.
- *Cryptographic procedures (authentication) with fixed keys.* The use of cryptographic procedures offers much greater security (second generation immobilisation). In the *authentication* sequence (challenge response) knowledge of a secret (binary) key is checked, without this key being transmitted (see Chapter 8). In vehicle applications, however, unilateral authentication of the key transponder by the reader in the ignition lock is sufficient.

The RFID reader now communicates with the vehicle's *motor electronics*, although this communication is protected by cryptographic procedures. The motor electronics control all important vehicle functions, in particular the ignition system and fuel system. Simply short-circuiting or disconnecting certain cables and wires is no longer sufficient to circumvent an electronic immobilisation system. Even attempting to fool the motor electronics by inserting another ignition key

**Figure 13.43** The antenna of the electronic immobilisation system is integrated directly into the ignition lock (reproduced by permission of Deister Elektronik, Barsinghausen)

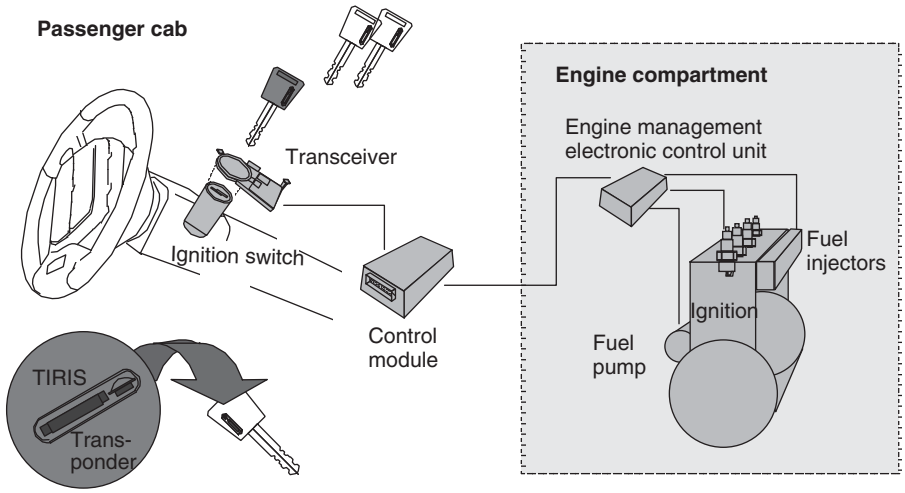


**Figure 13.44** Functional group of an electronic immobilisation system. The RFID reader authenticates itself with regard to the motor electronics to prevent the manipulation of the reader. The motor electronics control the ignition, fuel and starter and thus can block all the crucial functions of the vehicle (reproduced by permission of Texas Instruments)

of the same type into the ignition lock is bound to fail because of the authentication procedure between reader and motor electronics. Only the vehicle's own key has the correct (binary) key to successfully complete the authentication sequence with the motor electronics.

The installation of such an electronic immobiliser to the engine management system can only be performed at the factory by the vehicle manufacturer, thus guaranteeing optimal interaction between engine control system and security device. The individual key data is programmed in the factory by laser-programmable fuses on the chip or by writing to an OTP-EEPROM. The vehicle manufacturer is also responsible for implementing appropriate security measures to prevent criminals from unlawfully procuring replacement parts (Wolff, 1994). With few exceptions, electronic immobilisation systems have been fitted to all new cars as standard since the beginning of 1995 (Anselm, 1996).

## *13.10.2 Brief Success Story*

In 1989 the Berlin wall and the border to Eastern Europe were opened, and the years following 1989 were characterised by dramatic increases in vehicle thefts in Germany. From 48 514 thefts in 1988, the figure had risen to 144 057 thefts just five years later in 1993 – almost a threefold increase. This prompted the German Federal Supervisory Office for Insurance to declare a change to the General Insurance Conditions for Motor Vehicle Insurance (AKB) at the beginning of 1993.

According to the old conditions, vehicle owners with fully comprehensive insurance could, under certain conditions, claim the full price for a new car if their vehicle was stolen, although the resale value of the stolen vehicle and thus the damage suffered was significantly less than this (Wolff, 1994). The value of a vehicle after just a few months falls a long way short of the price of a new car.

Under the new conditions, only the cost of replacing the vehicle, i.e. its actual market value, is refunded in the case of loss (accident, theft, etc.). Furthermore, if the loss is due to theft an excess is deducted from the payment, which may be waived if the vehicle is fitted with an approved

anti-theft device (Wolff, 1994). The vehicle owner's own interest in having an effective anti-theft device was significantly increased by the new insurance conditions.

The effectiveness of electronic immobilisation has been clearly demonstrated by the decreasing trend in vehicle thefts in Germany. In 1994 there had already been a slight fall of about 2000 to 142 113, compared to the record figure from 1993. Two years later – 1996 – 110 764 thefts were reported. This represents a fall of 22% in just 2 years.

Another factor is that since 1995 electronic immobilisers have been fitted to all new cars – with a few exceptions – in the factory as standard. If we consider vehicles secured in this manner alone, then we can expect a reduction in the theft rate by a factor of 40(!).

In this connection it is interesting to examine investigations by insurance companies into vehicle thefts where electronic immobilisers were fitted (Anselm, 1995, 1996; Caspers, 1997).

Of 147 stolen vehicles in 1996, 70% of thefts were performed using the original key, which the thief had obtained by breaking into homes, garages and workshops, or by stealing from offices, bags and changing rooms, or by the fraudulent renting and misappropriation of rental or demonstration cars. In the remaining 30% of cases, the vehicles either disappeared under circumstances that indicated the cooperation of the owner (without this being proved in individual cases), or vehicles were loaded onto lorries and transported away by professionals.

There has not been one case since 1995 where the electronic immobiliser has been 'cracked' or beaten by a thief.

### *13.10.3 Predictions*

The next generation of immobilisers will also incorporate a passive, cryptologically secured access system. In this system, a reader will be fitted in each of the vehicle's doors. Sequential systems (TIRIS®) will be able to achieve a remote range, in which the transponder is supplied by a battery,

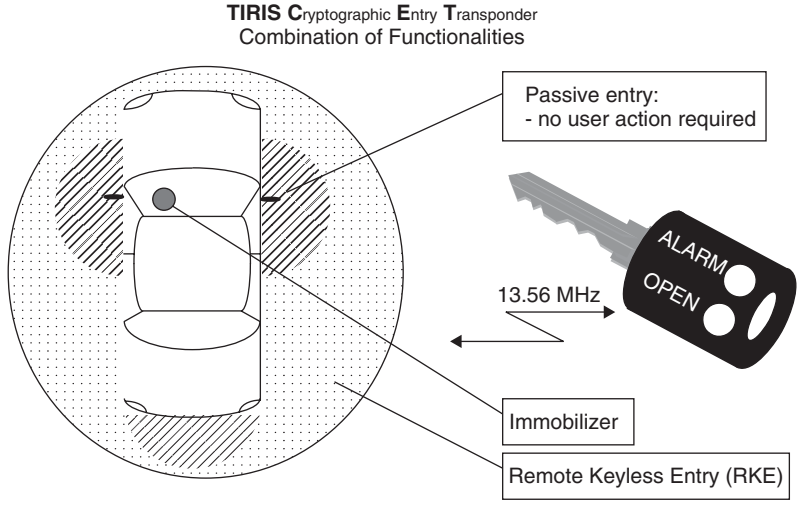


**Figure 13.45** Electronic immobiliser and door locking system are integrated into a transponder in the ignition key. In the ignition lock and in the vicinity of the doors (passive entry) the transponder is supplied with power by inductive coupling. At greater distances (remote keyless entry) the transponder is supplied with power from a battery (round cell in the top of the key) at the push of a button ('OPEN') (reproduced by permission of Texas Instruments)

so that the vehicle's central locking system can be operated from a greater distance away. This is similar in its function to the combination of an immobiliser and central locking remote control on a single transponder.

## 13.11 Container Identification

### *13.11.1 Gas Bottles and Chemical Containers*

Gas and chemicals are transported in high-quality rented containers. Selecting the wrong bottle during refilling or use could have fatal consequences. In addition to product-specific sealing systems, a clear identification system can help to prevent such errors. A machine-readable identification system gives additional protection (Braunkohle, 1997). A large proportion of containers supplied today are identified by barcodes. However, in industrial use the popular barcode system is not reliable enough, and its short lifetime means that maintenance is expensive.

Transponders also have a much higher storage capacity than conventional barcodes. Therefore additional information can be attached to the containers, such as owner details, contents, volumes, maximum filling pressure and analysis data. The transponder data can also be changed at will, and security mechanisms (authentication) can be used to prevent unauthorised writing or reading of the stored data.

Inductively coupled transponders operating in the frequency range $<135$ kHz are used. The transponder coil is housed in a ferrite shell to shield it from the *metal surface* (see also Section 4.1.12.3).

The manufacturing process for the transponders is subject to exacting standards: the transponders are designed for an extended temperature range from $-40$ to $+120\,^{\circ}$C; their height is just 3 mm. These transponders must also be resistant to damp, impact, vibrations, dirt, radiation and acids (Bührlen, 1995).

Because the transmission procedure for transponders used in *container identification* has not been standardised, various systems are available. Because a device has been developed that can process all the transponder types used, the user can choose between the different transponder systems – or may even use a combination of different systems.

**Figure 13.46** Identification of gas bottles using a portable reader. The reader (scemtec SIH3) is designed to function with transponders from different manufacturers (reproduced by permission of Messer Griesheim)

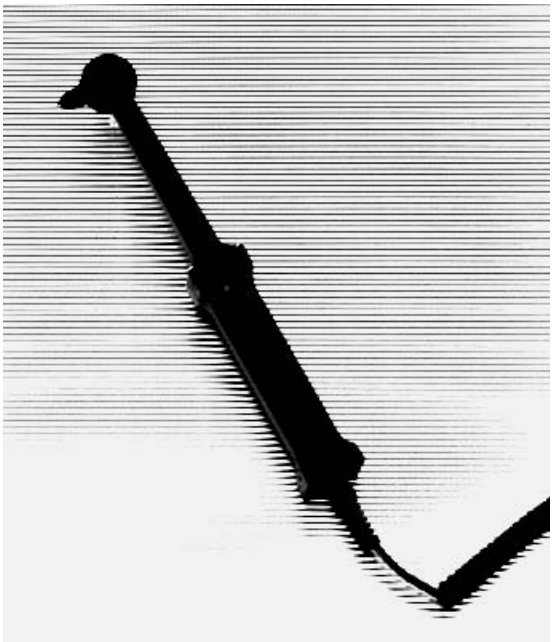

**Figure 13.47** Portable antenna for reading inductively coupled transponders mounted on gas bottles or other containers (reproduced by permission of SCEMTEC Transponder Technology GmbH, Reichshof-Wehnrath)

Mobile and stationary readers are available. Stationary readers can be incorporated into a production system which automatically recognises and rejects wrong containers. After filling, the current product data is automatically stored on the transponder. When this system is used in combination with database management, the number of containers used by a customer for a given gas consumption can be drastically reduced, because excessive standing times or storage periods can be easily recognised and corrected. In addition, all the stations that the container passes through on its way to the customer and back can be automatically recorded by the use of additional readers. So, for example, it is possible to trace customers who return the containers dirty (Braunkohle, 1997). For gas, where there is not much potential for product differentiation between manufacturers, the associated cost savings can convey an important competitive advantage (Bührlen, 1995).

In total, over eight million gas bottles in Germany alone are waiting to be fitted with transponders. For Europe, this figure is approximately 30 million. In addition to gas bottles, transponders are also used for rental containers, beer kegs and boxes and transportation containers for the delivery industry.

## *13.11.2 Waste Disposal*

Because of increasingly rigorous environmental legislation, the cost of waste disposal is increasing all the time. Costs associated with creating new waste disposal sites and maintaining existing sites

are being passed on to individual households and industrial companies. Automatic measurement of the amount of waste produced helps to distribute the costs fairly. For this reason, more and more cities are using RFID systems to optimise communal *waste disposal*, and are thus putting the conditions in place for replacing the flat rate charge for waste disposal with a charge based upon the quantity of waste produced. The waste disposal companies will only charge for the amount that has actually been removed.

To achieve this goal, a transponder is fitted to the dustbin and automatic reader systems are installed in rubbish collection vehicles. As soon as the dustbin is placed on the vehicle's emptying device its transponder is read. In addition, either the weight or the volume of rubbish is calculated, depending upon the preference of the community. A counter, to show how often the bin has been emptied in the year, is also feasible (EURO-ID, n.d.).

The identifier read by the transponder is stored in a smart card in the vehicle's on-board computer together with the data collected. At the end of a round the driver passes the card to the operations centre so that the collected data can be processed. Individual households no longer pay a monthly flat rate, but each receive an individual bill (Prawitz, 1996).

In Germany RFID systems are already in use in various cities, including Bremen, Cologne and Dresden, and in numerous communities.

## 13.12 Sporting Events

In large-scale sporting events such as major marathons, the runners who start at the back of the field are always at a disadvantage, because their times are calculated from the moment the race is started. For many runners it takes several minutes before they actually cross the starting line. In very large events with 10 000 participants or more, it might be 5 minutes before the last runners have crossed the starting line. Without individual timing, the runners in the back rows are therefore at a severe disadvantage.

To rectify this injustice, all runners carry a transponder with them. The system is based upon the idea that each runner places his feet repeatedly on the ground and thus comes very close to a *ground antenna*. In experimental events it was found that using a ingenious arrangement of multiple antennas in an array and a chip in the shoe over 1000 runners can be registered up to eight times in a minute with a start width of just 4 m (ChampionChip, n.d.).

The transponder is based upon a glass transponder operating in the frequency range 135 kHz, embedded into a specially shaped (ABS) injection moulded housing (Figure 13.50). To get the transponder as close as possible to the ground – and thus to the antenna of the time measurement device – this is attached to the runner's shoe using the shoelaces.

The reader antennas are cast into thin *mats* and can thus be placed on the ground and still be protected from all environmental influences. The dimensions of a single mat are $2.10 \times 1.00$ m. At a normal running speed a net time resolution of $\pm 1$ s is possible, derived from the time the runner remains within the read range of a mat. The accuracy for cyclists improves to $\pm 0.2$ s. The measured time is immediately displayed on a screen, so that the reader can read his current intermediate time or final time as he passes a control station.

The runner can make a one-off purchase of the transponder for €20 and then use it wherever compatible timing systems are used.

The performance of a transponder-based timing system has been demonstrated at the following events: Rotterdam Marathon (10 000 participants), Shell Hanseatic Marathon, Hamburg (11 500 participants) and the Berlin Marathon (13 500 participants) (Champion-chip).

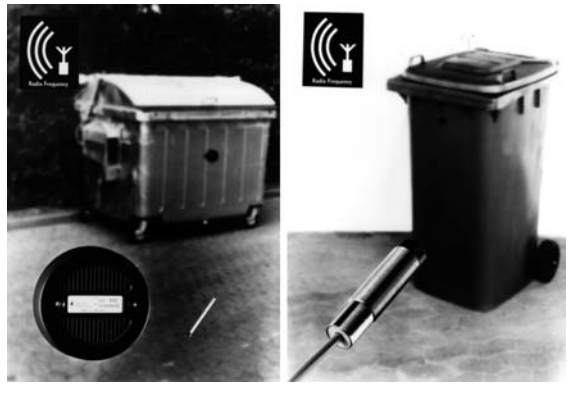

**Figure 13.48** Left, dustbin transponder for fitting onto metal surfaces; right, reader antenna for installation in the dustcart. A plastic dustbin fitted with a transponder is shown in the background (reproduced by permission of Deister Electronic, Barsinghausen)

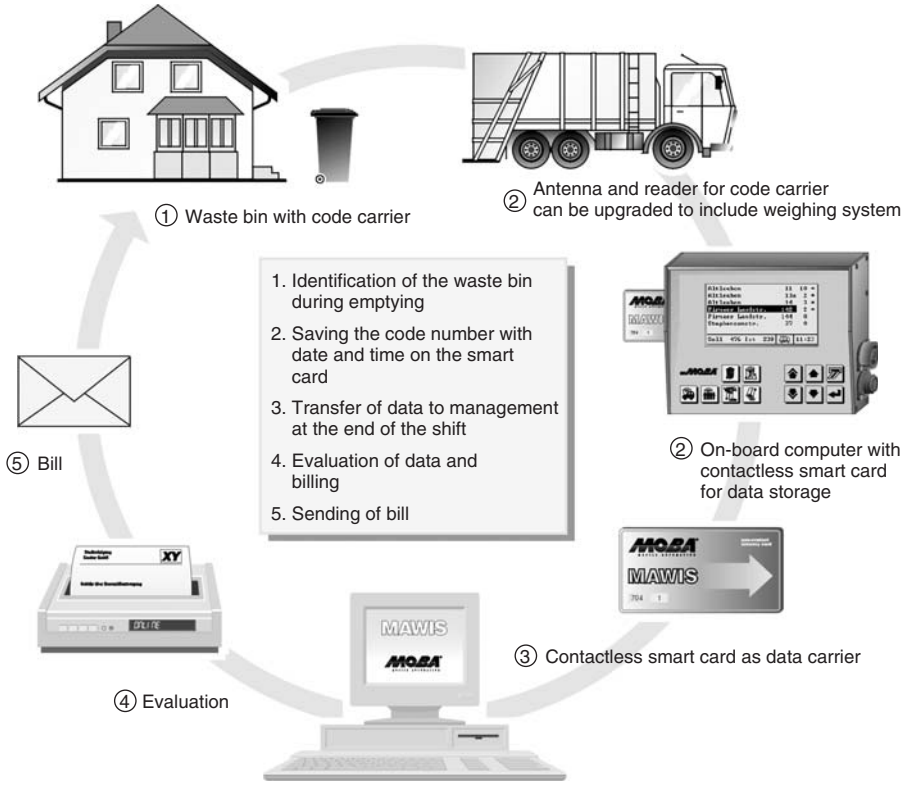


**Figure 13.49** Waste generation cycle including billing (reproduced by permission of MOBA Mobile Automation GmbH, Elz)

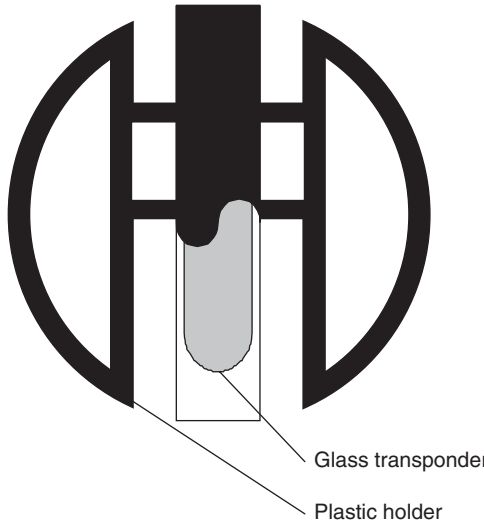


**Figure 13.50** The transponder consists of a glass transponder, which is injected into a plastic housing that is shaped according to its function. The diagram shows the partially cut away plastic housing

**Figure 13.51** The ChampionChip transponder is fastened to the runner's shoe with the shoelace (reproduced by permission of ChampionChip BV, NL-Nijmegen)

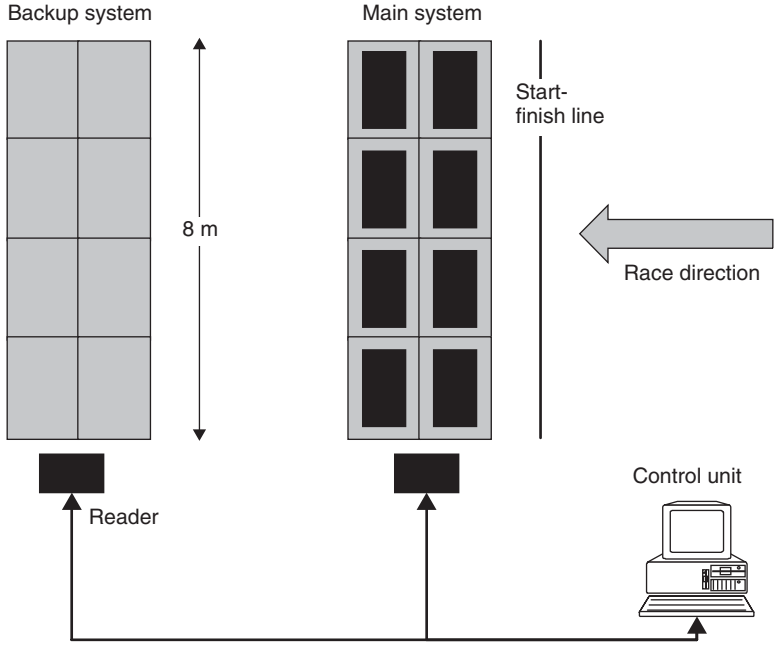


**Figure 13.52** A control station consists of a main system and a reserve system. The systems are made up of arrays of antennas in mats

**Figure 13.53** Runners passing the control station at the end of the 101st Boston Marathon. In the foreground we can see the mats containing the readers. The times can be displayed on a screen immediately (reproduced by permission of ChampionChip BV, NL-Nijmegen)

## 13.13 Industrial Automation

### *13.13.1 Tool Identification*

As well as its metal cutting tool industry, Germany's woodworking industry also plays a dominant role in the world market. The modern woodworking and furniture manufacturing industry is dominated by *CNC technology* because this enables manufacturers to manufacture at a low cost and remain competitive.

CNC machines equipped with tool holders and automatic tool changers fulfil tasks that are increasingly associated with small batch production. This increases the proportion of manufacturing costs incurred by retooling and tool-change times.

Another consideration is the fact that a CNC woodworking machine differs from a metalworking machine because of its higher rotation and path speeds. Rotation speeds from $1000\,\text{min}^{-1}$ to more than $20\,000\,\text{min}^{-1}$ (!) are attained in wood and plastic processing. The risk of accidents for worker and machine is therefore very high during the tool-change operation; for example, hazards may be caused by the wrong fitting of the CNC machine's chain magazine (Leitz, n.d.; Töppel, 1996).

This potential hazard can be eliminated by fitting a transponder in the *taper shaft* or in the *retention bolts* of the toolholder. All relevant tool data are preprogrammed into the transponder by the tool manufacturer. The machine operator fits the transponder tools into the CNC machine's toolholder in any order. Then the CNC machine initiates an automatic read sequence of all tools in the toolholder, during which the tools are first ordered into toolholder positions and then all geometric and technical data for the tools is transmitted correctly to the tool management system of the CNC control unit. There is no manual data entry, which eliminates the possibility of human error (Leitz, n.d.). The danger of accidents due to excessive speeds, the selection of the wrong rotation direction or the incorrect positioning of the tool in relation to the workpiece is thus eliminated.

Inductively coupled transponders operating in the frequency range $<135\,\text{kHz}$ are used. The transponder coil is mounted on a ferrite core to shield it from the *metal surface* (see also Sections 4.1.12.3 and 2.2). The transponder must have a minimum of 256 bytes of memory, which is written with an ASCII string containing the required tool data. An example of a data record is illustrated in Table 13.4.

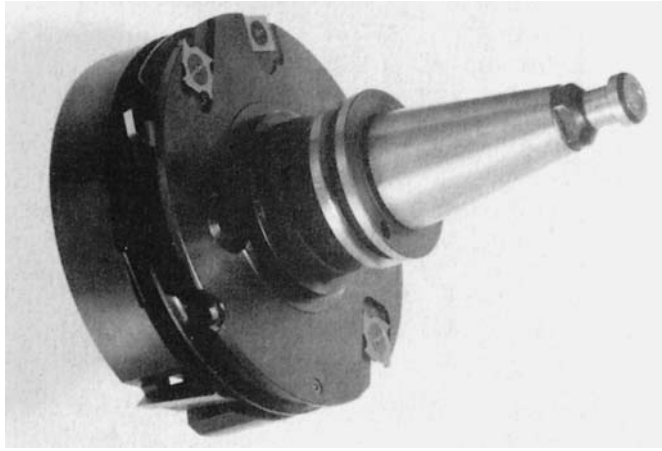

**Figure 13.54** CNC milling tool with transponder in the retention bolts (reproduced by permission of Leitz GmbH & Co., Oberkochen)

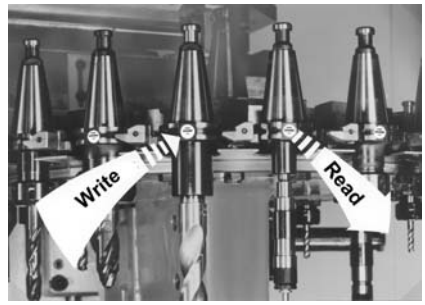


**Figure 13.55** Various woodworking tools with transponder data carrier in the taper shaft (reproduced by permission of EUCHNER & Co., Leinfelden-Echterdingen)

**Table 13.4** Example of a data record for a tool transponder (Leitz, n.d)

| Customer | Furniture production plant XY |
|---|---|
| LEITZ ID number | 130004711 D25x60 |
| Manufacturing reference | Y21 |
| Place of manufacture | UHE |
| Rotation direction | 3 |
| Maximum rotation speed | 24 000 |
| Min. rotation speed ($min^{-1)}$ | 18 000 |
| Ideal rotation speed ($min^{-1)}$ | 20 000 |
| Radius correction | 25 011 |
| Longitudinal correction | 145 893 |
| Greatest radius | 25 500 |
| Greatest length | 145 893 |
| Maximum travel | 3000 |
| Current travel | 875 |
| Tool number | 14 |
| Tool type | 1 |
| Number of sharpenings | 2 |
| Angle of clearance (degrees) | 20 |
| Cutting rake (degrees) | 15 |
| Free text | Finishing cutter HM $Z = 3$ |

Modern transponder coded CNC tools can be incorporated into a cost-saving production and service cycle. The service cycle is incorporated, smoothly and simply, into the production cycle as follows.

The worn tool is first examined and measured in detail to determine its condition. The tool is then serviced, sharpened and balanced on the basis of this data. After every maintenance sequence the tool length and radius is updated and written to the transponder, so that correctly dimensioned workpieces are produced by both new and sharpened tools without intervention by the operator.

## *13.13.2 Industrial Production*

*Production processes* underwent a process of continuous rationalisation during the development of industrial *mass production*. This soon led to production line assembly ('conveyor belt production'),

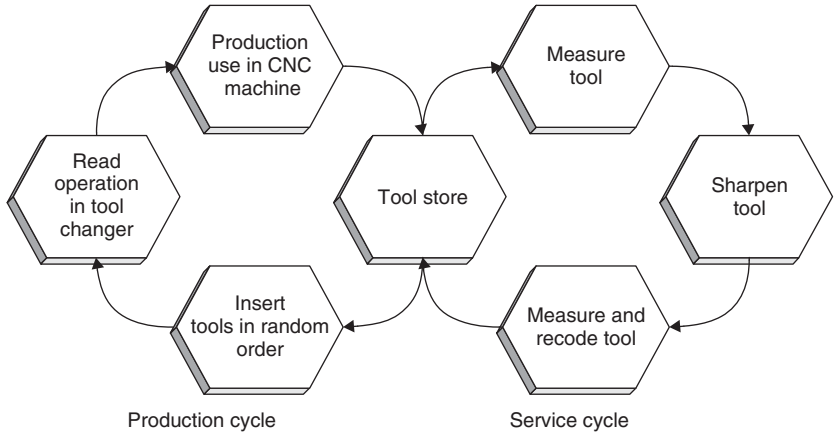


**Figure 13.56** Representation of the tool cycle when using transponder-coded CNC tools

with the same stage of production being performed at a certain position on the assembly line time after time. For the present, a production process of this type is only able to produce objects that are identical in function and appearance. However, the days are numbered for machines that produce large quantities of a single product with no variants.

If different variants of a product are to be produced at the same time on an assembly line in an automated procedure, the object must be identified and its status clearly recognised at every work station, so that the correct processes can be performed. Originally, this was achieved by objects being accompanied by process cards, which gave the operating personnel all the information required at a particular workstation – the desired paint colour, for example. This was first achieved in electronic form using coding pegs affixed to the revolving palettes so that palette numbers could be read by the electronic control system. The position of these coding pegs could be sensed by inductive proximity switches (Weisshaupt and Gubler, 1992). This procedure has recently been improved by the use of barcode labels, which can simply be stuck onto the individual objects.

RFID technology now provides an additional option – data carriers that can not only be read, but also written. Now, in addition to recording the identity of an object, it is also possible to document its current status (e.g. processing level, quality data) and the past and future (desired end state) of the object.

Using modern *identification techniques*, production systems can now be realised which can produce variants of a product, or even different products, down to a batch size of one (Weisshaupt and Gubler, 1992). The automotive industry is a good example: since vehicles are predominantly produced to order and it is rare for two identical vehicles to be ordered, automatic material flow tracking is crucial to smooth operation. A vehicle must be clearly identified at the individual manufacturing stages to avoid, for example, an unwanted air conditioning system from being fitted, or the wrong paint colour being applied during painting (Homburg, 1996).

There are two possible methods of controlling a system based upon object data: centralised and decentralised control.

#### 13.13.2.1 Centralised Control

In this approach, *material flow* and object status are continuously monitored during the process and are stored in a database on a central computer. This builds up an image of the current process data

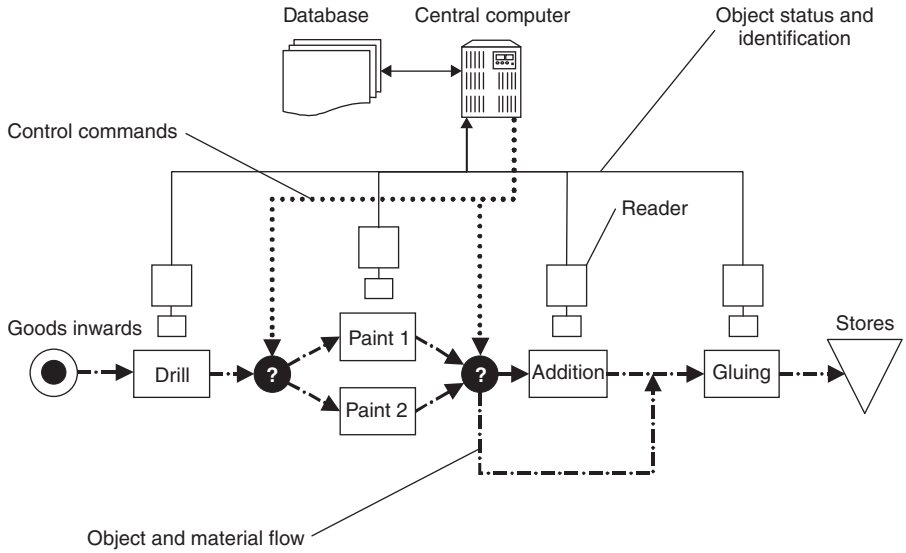


**Figure 13.57** The object and data flow in a central control system is performed using completely separate routes. The central computer has a powerful database in which all process data is stored

and system status in the process control system of the central computer. It makes no difference whether the status of objects in the process is determined using barcodes, radio, optical character recognition, RFID or any other type of information coding and transmission.

The monitoring of the process must be completely infallible, otherwise there is a danger that an object will become out of control. Restarting the system after a fault or the crashing of the control software can be a particularly critical moment.

Centralised control systems based upon a powerful central database are particularly common when it is necessary to access the information from different locations simultaneously, when a transparent image of process data must be available continuously for other purposes, or if important data needs to be stored permanently (Homburg, 1996). Apart from production, typical applications include stores technology, logistics or the collection of operating data.

#### 13.13.2.2 Decentralised Control

The use of readable and writable data carriers opens up the possibility of controlling a system locally, i.e. completely independently of the central process computer. Each object carries a complete data record with it that contains information about its identity, its current status, its history and its future – material and data flow are thus interlinked. For this to be successful, it must be possible not only to read the relevant data from the object at each processing station, but also to change and update this information. Of all known identification technologies, this can only be achieved with the necessary reliability using writable RFID transponders.

The option of changing the object data in the transponder at each processing station means that it is possible to create an information flow between the individual processing stations, which takes the pressure off the control system. Production and processing operations are becoming faster all the time, so the fact that information can be carried with the object and is available in the right place can become a decisive factor in speeding processes up. Due to possible overheads associated with accessing a remote database, readers in systems that operate at a rate of seconds are becoming

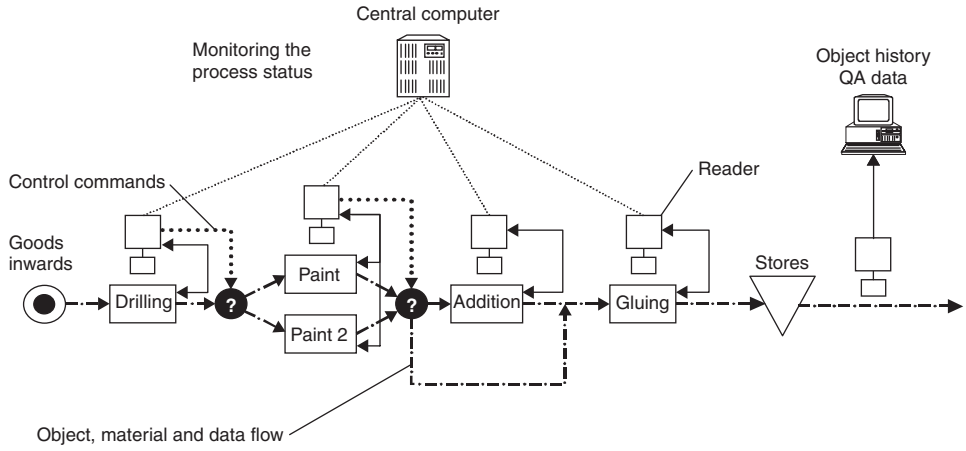


**Figure 13.58** In a decentralised system the data is carried along with the objects

increasingly unable to keep pace with the process, for example in the setting of points or the initiation of the correct processing operation (Homburg, 1996).

#### 13.13.2.3 Benefits from the use of RFID Systems

- *Quality control.* In modern production lines the quality of products is tested at test points located at a number of stations. When the product is inspected at the end of the production process, it must be possible to unambiguously attribute the quality data gathered earlier to the correct object. With writable transponders that travel with the product this is easy to achieve because all the quality data obtained during the production process is carried with the object.
- *System security.* Shifting object data from the central computer to the object significantly increases system security. Even after software crashes or failures of the central computer, the relationship between an object and its current data can be established anywhere and at any time. If necessary, objects can also be withdrawn from the production process without losing the data. If the object is subsequently put back into the process, work can continue without problems or faults occurring (Weisshaupt and Gubler, 1992).
- *Data security.* Protecting the data stored in the transponder using a checksum procedure (e.g. CRC, see Section 7.1) ensures the complete security of the data that has been read. Read errors are recognised as such and the data ignored.
- *Flexibility.* The use of writable transponders facilitates much more flexible control of the manufacturing process. For example, the set-up data for universally programmable robots and production machines can be written to the transponder carried with the object during the preparatory stage and is available immediately where it is needed. Using this technique, products can be manufactured right down to a batch size of one, without having to set up a complex communication with the central computer for each object.
- *Harsh environmental conditions.* RFID systems are completely insensitive to dust, moisture, oils, coolants, cuttings, gases, high temperatures and similar problems that can occur in a manufacturing environment. Glass and plastic transponders usually comply with protection type IP67; that is, they are totally dustproof and waterproof. Even particularly dusty or dirty environmental conditions, which would make the use of barcode readers impossible due to the rapid blocking of scanner optics, pose no problems for RFID systems.

#### 13.13.2.4 The Selection of a Suitable RFID System

When selecting a suitable RFID system for use in the production process, the characteristics of the different memory technologies should be considered (see also Section 10.3).

***EEPROM***

Data stored in an *EEPROM* is retained for several years without a power supply. The energy required for writing to or reading from a transponder using EEPROM technology is transmitted by inductive coupling. Since the transponders do not require a battery they may be very small. The guaranteed number of write access operations to a memory address is typically around $10^5$ cycles, which is greater than the lifetime of the transponder. However, an innovative type of EEPROM technology is now available on the market which can be reprogrammed more than $10^6$ times. This can be increased still further by the use of FRAM memory technology. Over $10^{10}$ write cycles are already being achieved using this technology.

***SRAM***

In contrast to EEPROMS, *SRAM* memory cells require a constant power supply to retain stored data. Therefore, transponders using this memory technology always have their own battery. Data transmission between reader and transponder employs either inductive coupling or the backscatter procedure (microwave). SRAM memory can be reprogrammed any number of times with high write speeds. However, the integral battery limits the temperature range of this transponder to 0–60 °C.

#### 13.13.2.5 Example Projects

Let us now consider a few examples of the use of RFID systems in manufacturing. It is no coincidence that most of the examples described here are taken from the *automotive industry*. In this industry in particular companies are continuously striving to optimise the production process.

In BMW's Dingolfing factory (Southern Germany), the car bodies of the 7 and 5 Series were originally identified manually at the identification points using barcode readers. To cut costs, a

**Table 13.5** Comparison between the two memory technologies for transponders

| | EEPROM/FRAM | SRAM |
|---|---|---|
| Memory size (Kbyte) | 16 byte–32 | 1–512 |
| Data transmission | Inductive coupling | Inductive coupling, backscatter |
| Power supply | Inductive coupling | Battery |
| Typical number of write cycles | EEPROM: 100 000–1 000 000<br>FRAM: $10^{10}$ | Unlimited |
| Typical temperature range (°C) | −20 to 20 | 0–60 |
| Applications | Applications with a limited number of reprogramming operations (EEPROM) | Applications with any number of reprogramming operations, e.g. in assembly systems |
| | Applications with expanded temperature range | Use in the 'normal' industrial temperature range |
| | – | Need for higher memory size with short transaction time |
| | – | Large transponder range required (or low positional accuracy) |

**Figure 13.59** After successful identification of the vehicle, its specific data is interrogated and displayed (reproduced by permission of Pepperl & Fuchs GmbH, Mannheim)

microwave identification system was installed (2.45 GHz, transmission power of reader: 10 mW) at the end of 1996. A transponder is now fitted to the bonnet of each painted body as it enters the production process and data for the model (e.g. chassis number) is written to this transponder. A total of around 3000 transponders are in circulation. Around 70 readers are installed in the assembly area at individual identification points in the various assembly stages. As soon as the body enters the interrogation zone of a reader the read process is initiated by an inductive proximity switch. The required data is read from, or if necessary written to, the transponder. The transponders are equipped with a battery designed for a lifetime of 8 years. They have a memory size of 32 Kbytes, and the range of up to 4 m is sufficient in all stages of assembly (Pepperl & Fuchs, 1998, n.d.a).

In Mercedes Benz's Tuscaloosa factory in the USA, inductively coupled transponders (125 kHz, read-only system) are used for the identification of skids for vehicle bodies. After the skid has travelled through the painting line several times it must be cleaned. This selection process can be performed without incurring additional costs by data capture using transponders (Schenk, 1997).

In the production of its 1E Generation, vehicle manufacturer General Motors produces 26 different engine models under one roof at its Flint factory (Michigan, USA). The product range incorporates a multitude of engine types, which includes 1997 to 1998 models, 5.0 to 5.7 litre engines, engines for automatic or shift transmission, engines for export, engines designed to run on environmental fuel and petrol, and engines for cars and lorries. Fitting the product carriers with transponders (13.56 MHz, 8 Kbyte memory) makes it possible to track and identify all engine models throughout the production process. Using RFID it is possible to trace any engine in the factory within seconds. Around 50 readers are installed in the production area for this purpose (Escort, 1998a).

The John Deere Company in Waterloo (Iowa, USA), the worldwide market leader in the production of agricultural machinery, employs an inductively coupled RFID system in the manufacture of tractors. The tractor bodies are equipped with special transponders that can withstand temperatures of up to 225 °C, and can even communicate with a reader at these temperatures, which means that

they can be used in the painting ovens (Escort, 1998b). The data carriers (13.56 MHz, 8 Kbyte memory) can be easily fitted to the rear axle of the tractor chassis. Because most tractors are manufactured to order, the use of modern identification technology allows tractors to be adapted to individual customer requirements.

The use of RFID systems in the meat processing industry is another interesting example. Barcode systems cannot be used due to the high temperatures of above 100 °C during canning and the long cooling periods. The company J. M. Schneider Meats, one of the largest meat processing companies in Canada with 15 factories, therefore uses an inductively coupled RFID system in the processing sequence for product identification and tracking. At the beginning of the process the meat is stacked onto mobile shelves. The meat is conveyed into the chill room via the smoking chambers on these shelves and in the last stage of processing it is heated to above 100 °C for conservation. It is vital that the company always knows precisely where the individual shelves are and which process they are currently undergoing. Transponders are therefore attached to the individual shelves (13.56 MHz) and significant data, such as the location of the shelves, meat type and weight data, is written to the transponder. The delivery time of the meat, which depends upon its use-by date, can also be consistently tracked by means of the RFID system (Escort, 1998c).

A further application that should clarify how RFID systems can help to increase the quality of a product by tolerance selection (Pepperl & Fuchs, n.d.b) is illustrated in Figure 13.60. This application involves the assembly of a precision clutch release stop. The system consists of a pallet rotary system, two robots and a manual work station. All the pallets are equipped with transponders. The individual components that make up the stop are measured by one of the robots and these measurements are used to assemble components so that the play in the finished stop is minimised. This allocation of individual components to each other is written as data to the transponder and thus carried along with the individual components. The second robot is an assembly robot which assembles the individual components into a stop. At this point the data is read from the transponder, so that the robot can always assemble the correct individual components.

**Figure 13.60** Individual components of a clutch release stop on a revolving pallet. Transponder and reader antenna are visible in the lower part of the photo (reproduced by permission of Pepperl & Fuchs GmbH, Mannheim)

The use of RFID systems can also bring benefits in *storekeeping* and *order processing*. One of the leading pharmaceutical companies, Sanacorp in Munich, has an electronically controlled stock keeping and order processing system, which allows products to be automatically collected in accordance with the delivery note. More than 6000 consignment containers (plastic containers) pass through the stores every day and need to be identified at individual loading points. In the old system using barcode labels or reflective code labels up to 100 errors occurred daily, meaning that the falsely identified consignment containers passed through all the loading points on the way to the goods outwards, thus delaying the entire consignment. To guarantee the infallible recognition of the consignment containers these were fitted with transponders (134 kHz, SEQ), which were welded to the base of the plastic trough. The reader antennas are located under the conveyor belts at the relevant stations. As soon as a consignment container rolls into the interrogation zone of a reader the transponder is read and the stored data is transferred to the stock-control computer. The central computer is informed of where each consignment container is located, whether delays are occurring during loading, and how busy the individual loading points are. The rapid collection of goods from the stores is important because customers, who are mainly pharmacists, expect the consignment to arrive on time and to be complete. This can only be guaranteed by a technically infallible order picking procedure (Sander and Mollik, 1997).

## 13.14 Medical Applications

The ability of passive transponders to operate reliably for years without their own power supply – which may be susceptible to failure – predestined this technology for applications in *human medicine*.

*Glaucoma* is a condition in which increased intraocular pressure (IOP) at first causes a narrowing of the field of vision, and ultimately results in complete blindness. The latest research has shown that intraocular pressure is subject to sharp diurnal fluctuations and that not only the absolute pressure, but also the pressure fluctuations, significantly influence the risk of blindness (Ullerich, 2001). Therefore, the continuous measurement of the intraocular pressure under normal conditions and in the patient's normal environment is necessary to improve understanding of the progression of the condition and facilitate an individual programme of treatment (Bögel and Niederholz, 2001). This is in contrast to the normal practice of measuring IOP exclusively during surgery hours with the aid of a tonometer.

**Figure 13.61** Transponder unit after casting into an artificial intraocular lens made of silicon (reproduced by permission of IWE1, RWTH Aachen, D-52074 Aachen)

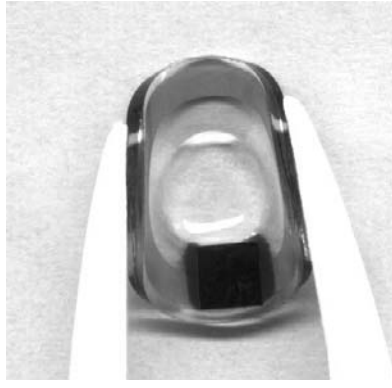

**Figure 13.62** Cast transponder unit deformed by a pair of tweezers (reproduced by permission of IWE1, RWTH Aachen, D-52074 Aachen)

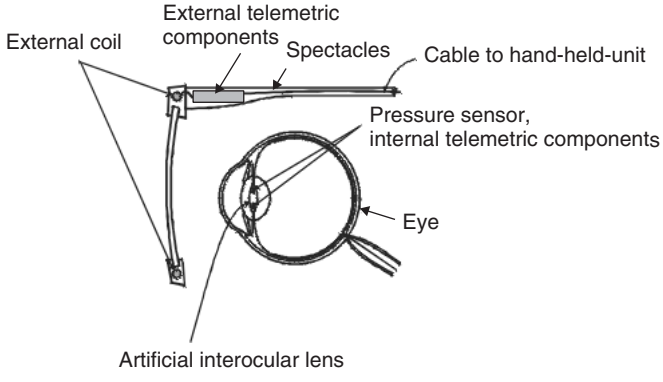


**Figure 13.63** An implanted transponder with a pressure sensor, and an antenna coil integrated into the frame of a pair of glasses make up the system for the continuous measurement of intraocular pressure (reproduced by permission of IWE1, RWTH Aachen, D-52074 Aachen)

In patients with a cataract, the natural lens is removed from the eye and replaced by an *artificial intraocular lens*. This prompted the idea of integrating a full transponder, i.e. a *microcoil* and a transponder chip with an integral capacitive pressure sensor, into the haptic of such an artificial intraocular lens. Figure 13.61 shows such a transponder unit after casting in PDMS (polydimethylsiloxane), a soft silicon normally used for the manufacture of artificial lenses.

The external diameter of the microcoil is around 10.3 mm and the internal diameter 7.7 mm. For the optical part of the lens 5 mm is specified. The microcoil is manufactured on a flexible polyimide foil (Ullerich, 2001; Ullerich *et al*., 2000, 2001a,b) and is thus foldable, which makes the implanting of the transponder much easier. The pressure sensor is micromechanically integrated into he transponder chip and has a sensitivity of 1.3 mbar, which roughly corresponds with the precision of current tonometer measurements (Ullerich, 2001).

So that the transponder can be read continuously, the reader's antenna is integrated into the frame of a pair of glasses. The control of the coil and the storage of the measured data takes place with the aid of the reader, which is connected to the glasses via a cable.

# 14

# Appendix

## 14.1 Contact Addresses, Associations and Technical Periodicals

The author can be contacted by post at the address of the publishing company:

Klaus Finkenzeller
c/o Carl Hanser GmbH & Co
Fachbuchlektorat
Kolbergerstr. 22
D-81679 Munich
Germany

and on the internet:

Homepage: http://RFID-handbook.de
http://RFID-handbook.com
Email: klaus.finkenzeller@rfid_handbook.de
or: dl5mcc@qsl.net

### *14.1.1 Industrial Associations*

Many manufacturers of RFID systems are members of the Industrieverband für Automatische Identifikation und Betriebsdatenerfassung (AIM). AIM Germany promotes the application of automatic data collection as well as product identification and international standardisation. For further information contact:

AIM-E e.V. – Branch office
Bürstädter Str. 64
D-68623 Lampertheim-Neuschloss
Hotline: +49 6206 13177
Homepage: http://www.aimgermany.aimglobal.org/

*RFID Handbook: Fundamentals and Applications in Contactless Smart Cards, Radio Frequency Identification and Near-Field Communication, Third Edition.* Klaus Finkenzeller
© 2010 John Wiley & Sons, Ltd

*AIM Germany* is the national industrial association for Automatic Identification and Data Collection Systems. AIM Germany is a member of the worldwide association AIM Global. Currently, AIM Global operates two regional support centres:

North, South, Central America Region
125 Warrendale-Bayne Road
Warrendale, PA
USA 15086, USA
Phone: +1 724 934 4470
Homepage: http://aimglobal.org
Email: info@aimglobal.org

Europe, Middle East, and Africa Regions
Avenue de Tervureren, 300
B-1150 Brussels, Belgium
Phone: +32 2 7434420
Email: emea@aimglobal.org
Contact: Milagros Mostaza Corral

We also recommend AIM's monthly *RFID Newsletter*, which is provided by email free of charge. Back issues are available at:

http://www.aimglobal.org/technologies/rfid/newsletter/RFID_Newsletter_Issues.htm

Contactless smart cards can be used as electronic tickets, helping to improve speed and convenience and aiding the realisation of new public transport products and flexible strategies. The *KONTIKI* working group aims to analyse technological and application-related developments, to develop practical application options for public transport, and to use these as the basis for recommendations to transport companies and associations. The idea is that users, manufacturers, consultants, associations and organisations work together to create interdisciplinary solutions. The working group is now active across Europe.
Work is carried out in subgroups, and the results are presented centrally. The working group also acts as a point of contact and consulting body to potential users of future smart card projects. Contact address:

Arbeitskreis kontiki – kontaktlose Chipkartensysteme for Electronic Ticketing e.B.
c/o Hannelore Weber Marketing
Wiesbadener Weg 6
65812 Bad Soden
Germany
Telephone: + 49 6196 766 66 50
Email: info@kontiki.net
Homepage: http://www.kontiki.net

A further group of companies, the Low Power Radio Association (LPRA), is concerned with low power radio systems. The LPRA was established in 1990 in the United Kingdom as the voice of the 'low power radio' industry. Now some 200 companies from around the world belong to LPRA. In addition to RFID, the association also deals with other radio services such as telemetry, cordless audio, Bluetooth, etc.

LPRA Sekretariat
Excelsiorlaan 91
B-1930 Zaventem
Email: info@lpra.org
Homepage: http://www.LPRA.org

### *14.1.2 Technical Journals*

One German-language technical journal that deals with the subjects of barcodes, auto-ID and RFID is:

*ident*
ident Verlag und Service GmbH
Heinrich-Heine-Str. 5
D-63322 Rödermark
phone.: +49 (0)6074/92 08 81
Homepage: http://www.ident.de

Another German publication that specifically deals with RFID-related subjects:

RFID im Blick
Das Medium für kontaktlosen Datentransfer
Verlag & Freie Medien, Anja Van Bocxlaer
Wohlenbütteler Str. 16a
D-21385 Amelinghausen
Homepage: http://rfid-im-blick.de

The following are English-language technical journals on the same subject:

*Global Identification*
On Publishing SA
144, Av. Eugène Plasky
B-1030 Bruxelles
Homepage: http://www.global-identification.com

*RFID Journal Magazine*
555 Broadhollow Road
Suite 274
Melville, NY 11747
USA
Homepage: http://www.rfidjournal.com/magazine

*Smart Labels Analyst*
IDTechEx Ltd
Far Field House, Albert Road
Quy, Cambridge CB5 9AR.UK
Homepage: http://www.idtechex.com

*Business Solutions*
Corry Publishing
2840 West 21st Street
Erie, PA 16506
USA
Homepage: http://www.businesssolutionsmag.com
RFID Resource Center:
http://businesssolutionsmag.com/RFID/Index.cfm

### *14.1.3 RFID on the Internet*

A collection of links to RFID companies and further interesting pages on this subject is available at the following internet addresses:

http://rfid-handbook.de/links

Technical specifications and information on the current state of standardisation of auto-ID systems of all types (barcode, RFID, etc.) are available on the official *Auto-ID homepage*:

http://www.autoid.org/

The *RFID Bulletin Board* is available as a discussion forum on the internet. The purpose of the RFID Bulletin Board is to serve as a neutral forum for the free exchange of information between RFID users, developers and all those interested in the subject of RFID. Questions, contributions and discussions on technical and commercial topics relating to RFID, event notices, questions on applications, standardisation of RFID, etc. are permitted and welcomed:

http://rfid-handbook.de/forum

RFID is also being discussed in numerous Usenet news groups. A quick overview can be obtained by using the Usenet search function at google.com (enter 'rfid OR contactless' as the search expression):

http://groups.google.com

A collection of press releases and articles on current developments of RFID technology can be found on the following homepages:

http://contactlessnews.com/
http://rapidttp.com/transponder
http://rfidchina.org/
http://rfidbuzz.com/
http://rfidexchange.com/
http://www.rfidgazette.org/
http://rfidinvesting.com/RFID/
http://rfidjournal.com
http://rfidlog.com/
http://rfidnews.org/
http://rfidresellers.com/

http://rfidtalk.com/
http://rfidtoday.blogspot.com/
http://rfidupdate.com/
http://rfid-weblog.com/
http://rifid.de/
http://morerfid.com/
http://www.usingrfid.com/

## 14.2 Relevant Standards and Regulations

### *14.2.1 Standardisation Bodies*

| | |
|---|---|
| AIAG | Automotive Industry Action Group |
| ANSI | American National Standards Institute |
| ASTM | American Society for Testing and Materials |
| AWWA | American Water Works Association |
| CEN | Comité Européen Normalisation |
| CEPT | Conférence Européenne des Postes et Télécommunications |
| EAN.UCC | European Article Numbering Association International, Uniform Code Council |
| EPCglobal | Electronic Product Code |
| ERO | European Radiocommunications Office |
| ETSI | European Telecommunications Standards Institute |
| INCITS | International Committee for Information Technology Standards |
| ISO/IEC | International Organization for Standardization/International Electrotechnical Commission |
| UPU | Universal Postal Union |

### *14.2.2 List of Standards*

| | |
|---|---|
| 26. BImSchV: | 'Sechsundzwanzigste Verordnung zur Durchführung des Bundes-Immissionsschutzgesetzes – Verordnung über elektromagnetische Felder', with explanatory section, in Wolfgang Kemmer, '*Die neue Elektrosmog-Verordnung*', H. Hoffmann GmbH Verlag, Berlin, 1997, ISBN 3-87344-103-9 |
| AIAG ARF-1 | Application Standard for RFID Devices in the Automotive Industry |
| AIAG B-11 | Tire and Wheel Identification Label Standard |
| ANSI/INCITS 256 | Radio Frequency Identification (RFID), NCITS 256 defines a standard for Radio Frequency Identification (RFID) for use in item management. This standard is intended to allow for compatibility and to encourage interoperability of products for the growing RFID market in the United States |
| ANS/INCITS 371: | Information Technology – Real Time Locating Systems (RTLS).<br>Part-1: 2.4 GHz Air Interface Protocol<br>Part-2: 433 MHz Air Interface Protocol<br>Part-3: Application Programming Interface |
| ANSI/MH 10.8.4 | RFID for Returnable Containers. |
| AWWA IMT61457 | The Use of Mobile and RFID Data and Field Force Integration in a Major Water Utility |
| CEPT T/R 60-01: | Low-power radiolocation equipment for detecting movement and for alert (*EAS*). Technical Recommendation. http://www.ero.dk |
| CEPT T/R 22-04: | *Harmonisation of frequency bands for Road Transport Information Systems (RTI) (toll systems, freight identification)*. Technical Recommendation. http://www.ero.dk |

| | |
|---|---|
| ECMA-340: | see ISO/IEC 18092 (NFCIP-1) |
| ECMA-352: | see ISO/IEC 21481 (NFCIP-2) |
| ECMA-356: | see ISO/IEC 22536 (NFCIP-1; RF Interface Test Methods) |
| ECMA-362: | see ISO/IEC 23917 (NFCIP-2; Protocol Test Methods for NFC) |
| EN 50061: | *Safety of implantable cardiac pacemakers*. Regulations for protecting against malfunctions due to electromagnetic interference (corresponds with VDE 0750). http://www.etsi.org |
| EN 300 220: | *Electromagnetic Compatibility and Radio Spectrum Matters (ERM); Short Range Devices (SRD); Radio equipment to be used in the 25 MHz to 1000 MHz frequency range with power levels ranging up to 500 mW*. http://www.etsi.org<br>Part 1: Technical characteristics and test methods<br>Part 2: Supplementary parameters not intended for conformity purposes<br>Part 3: Harmonized EN covering essential requirements under article 3.2 of the R&TTE Directive |
| EN 300 330: | *Electromagnetic Compatibility and Radio Spectrum Matters (ERM); Short Range Devices (SRD); Radio equipment in the frequency range 9 kHz to 25 MHz and inductive loop systems in the frequency range 9 kHz to 30 MHz*. http://www.etsi.org<br>Part 1: Technical characteristics and test methods<br>Part 2: Harmonized EN under article 3.2 of the R&TTE Directive. |
| EN 300 440: | *Radio Equipment and Systems (RES); Short range devices, Technical characteristics and test methods for radio equipment to be used in the 1 GHz to 25 GHz frequency range with power levels ranging up to 500 mW*. http://www.etsi.orgRadio Equipment and Systems (RES); Short range devicesRange Devices |
| ETS 300 683: | *Radio Equipment and Systems (RES); ElectroMagnetic Compatibility (EMC) standard for Short Range Devices (SRD) operating on frequencies between 9 kHz and 25 GHz*. http://www.etsi.org |
| EN 300 761: | *Electromagnetic compatibility and Radio spectrum Matters (ERM); Short Range Devices (SRD); Automatic Vehicle Identification* (AVI) for *railways* operating in the 2.45 GHz frequency range. http://www.etsi.org<br>Part 1: Technical characteristics and methods of measurement.<br>Part 2: Harmonized standard covering essential requirements under article 3.2 of the R&TTE Directive |
| EN 300 674: | *Electromagnetic ompatibility and Radio Spectrum Matters (ERM); Road Transport and Traffic Telematics (RTTT); Technical characteristics and test methods for dedicated short range communications (DSRC) transmission equipment (500 kbit/s/250 kbit/s) operating in the 5.8 GHz Industrial, Scientific and Medical (ISM) band*. http://www.etsi.org |
| EN 301 489: | *Electromagnetic Compatibility and Radio Spectrum Matters (ERM); Electromagnetic compatibility (EMC) standard for radio equipment and services*. http://www.etsi.org<br>Part 1: Common technical requirements<br>Part 2: Specific requirements for radio paging equipment<br>Part 3: Specific requirements for short range devices (SRD) operating on frequencies between 9 kHz and 25 GHz<br>Part 4: Specific requirements for fixed radio links and ancillary equipment and services<br>Part 5: Specific requirements for private and mobile radio (PMR) and ancillary equipment (speech and non-speech)<br>Part 6: Specific conditions for digital enhanced cordless telecommunications (DECT) equipment<br>Part 7: Specific conditions for mobile and portable radio and ancillary equipment of digital cellular radio telecommunications systems (GSM and DCS)<br>Part 8: Specific requirements for GSM base stations<br>Part 9: Specific conditions for wireless microphones and similar radio frequency (RF) audio link equipment |

| | |
|---|---|
| | Part 10: Specific conditions for first (CT1 and CT1 +) and second generation cordless telephone (CT2) equipment |
| | Part 11: Specific conditions for FM broadcasting transmitters |
| | Part 12: Specific conditions for Earth stations operated in the frequency ranges between 4 GHz and 30 GHz in the fixed satellite service (FSS) |
| | Part 13: Specific conditions for citizens' band (CB) radio and ancillary equipment (speech and non-speech) |
| | Part 15: Specific conditions for commercially available amateur radio equipment |
| | Part 16: Specific conditions for analogue cellular radio communications equipment, mobile and portable |
| | Part 17: Specific requirements for wideband data and HIPERLAN |
| | Part 18: Specific requirements for terrestrial trunked radio (TETRA) |
| | Part 19: Specific conditions for receive only mobile Earth stations (ROMES) operating in the 1.5 GHz band providing data communications |
| | Part 20: Specific conditions for mobile Earth stations (MES) used in the mobile satellite services (MSS) |
| | Part 22: Specific requirements for VHF aeronautical mobile and fixed radios |
| ERC/DEC 92-02: | *CEPT/ERC Decision on the frequency bands to be designated for the coordinated introduction of road transport telematic systems*. http://www.ero.dk |
| ERC/DEC 97-10: | *CEPT/ERC Decision on the mutual recognition of conformity assessment procedures including marking of radio equipment and radio terminal equipment*. http://www.ero.dk |
| ERC/DEC 01-01: | *CEPT/ERC Decision: non-specific short range devices in 6765–6795 kHz and 13.552–13.567 MHz*. http://www.ero.dk |
| ERC/DEC 01-02: | *CEPT/ERC Decision: non-specific short range devices in 26.957–27.283 MHz*. http://www.ero.dk |
| ERC/DEC 01-03: | *CEPT/ERC Decision: non-specific short range devices in 40.660–40.700 MHz*. http://www.ero.dk |
| ERC/DEC 01-04: | *CEPT/ERC Decision: non-specific short range devices in 868.0–868.6 MHz, 868.7–869.2 MHz, 869.4–869.65 MHz, 869.7–870.0 MHz*. http://www.ero.dk |
| ERC/DEC 01-05: | *CEPT/ERC Decision: non-specific short range devices in 2400–2483.5 MHz*. http://www.ero.dk |
| ERC/DEC 01-13: | *CEPT/ERC Decision: short range devices for inductive applications in 9–59,750 kHz, 59.750–60.250 kHz, 60.250–70 kHz, 70–119 kHz and 119–135 kHz*. http://www.ero.dk |
| ERC/DEC 01-14: | *CEPT/ERC Decision: short range devices for inductive applications in 6765–6795 kHz, 13.553–13.567 MHz*. http://www.ero.dk |
| ERC/DEC 01-15: | *CEPT/ERC Decision: short range devices for inductive applications in 7400–8800 kHz*. http://www.ero.dk |
| ERC/DEC 01-16: | *CEPT/ERC Decision: short range devices for inductive applications in 26.957–27.283 MHz*. http://www.ero.dk |
| ERC/REC 01-06: | *CEPT/ERC Recommendation: procedure for mutual recognition of type testing and type-approval for radio equipment*. http://www.ero.dk |
| ERC/REC 70-03: | *CEPT/ERC Recommendation 70-03 relating to the use of short range devices (SRD)*. http://www.ero.dk |
| ETSI TS 102 190: | see ISO/IEC 18092 (NFCIP-1) |
| ETSI TS 102 312: | see ISO/IEC 21481 (NFCIP-2) |
| ETSI TS 102 345: | see ISO/IEC 22536 (NFCIP-1; RF interface test methods) |
| ISO/IEC 6346 | Freight containers – coding, identification and marking |
| ISO/IEC 7810: | Identification cards – physical characteristics |
| ISO/IEC 7816: | Identification cards – integrated circuit(s) cards with contacts |
| | Part 1: Physical characteristics |
| | Part 2: Dimensions and location of the contacts |
| | Part 3: Electronic signals and transmission protocols |
| | Part 4: Interindustry commands for interchange |

| | |
|---|---|
| | Part 5: Registration system for applications in IC cards<br>Part 6: Interindustry data elements<br>Part 7: Interindustry commands for structured card query language (SCQL)<br>Part 8: Security architecture and related interindustry commands<br>Part 9: Enhanced interindustry commands<br>Part 10: Electronic signals and answer to reset for synchronous cards<br>Part 11: Card structure and enhanced functions for multi-application use<br>Part 12: Cryptographic information application |
| ISO/IEC 8824-1: | Information technology – Abstract Syntax Notation One (ASN.1) – specification of basic notation. |
| ISO/IEC 8825-1: | Information technology – ASN.1 encoding rules – specification of basic encoding rules (BER), canonical encoding rules (CER) and distinguished encoding rules (DER). |
| ISO/IEC 9798: | *Information technology – security techniques – entity authentication*. Principles and description of authentication procedures<br>Part 1: General<br>Part 2: Mechanisms using symmetric encipherment algorithms<br>Part 3: Mechanisms using digital signature techniques<br>Part 4: Mechanisms using a cryptographic check functions<br>Part 5: Mechanisms using zero knowledge techniques |
| ISO/IEC 9834-1: | 1993/Amd.2: 1988 Information technology – open systems interconnection – procedures for the operation of OSI registration authorities: general procedures |
| ISO/IEC 10373: | *Identification cards – test methods*. Test methods for 'plastic cards' for testing the card body and the fitted card element (magnetic strip, semiconductor chip). The standard consists of the following parts:<br>Part 1: General<br>Part 2: Magnetic strip technologies<br>Part 3: Integrated circuit cards (smart cards with contact)<br>Part 4: Contactless integrated circuit cards (close coupling)<br>Part 5: Optical memory cards<br>Part 6: Proximity cards (contactless smart cards acc. to ISO/IEC 14443)<br>Part 7: Vicinity cards (contactless smart cards acc. to ISO/IEC 15693) |
| ISO/IEC 10374: | *Container – Automatische Identifizierung* (f*reight containers – automatic identification*). Automatic identification of freight containers by a 2.45 GHz transponder system. |
| ISO/IEC 10536: | *Identification cards – contactless integrated circuit(s) cards*. Contactless smart cards in close coupling technology. The standard consists of the following parts:<br>Part 1: Physical characteristics<br>Part 2: Dimensions and location of coupling areas<br>Part 3: Electronic signals and reset procedures<br>Part 4: Answer to reset and transmission protocols |
| ISO/IEC 11784: | *Radio frequency identification of animals – code structure*. Identification of animals by RFID systems. Description of the data structure. |
| ISO/IEC 11785: | *Radio frequency identification of animals – technical concept*. Identification of animals by RFID systems. Description of the RF transmission procedure. |
| ISO/IEC 14223: | *Radio frequency identification of animals – advanced transponders*:<br>Part 1: Air interface<br>Part 2: Code and command structure |
| ISO/IEC 14443: | *Identification cards – proximity integrated circuit(s) cards*:<br>Part 1: Physical characteristics<br>Part 2: Radio frequency interface<br>Part 3: Initialization and anticollision<br>Part 4: Transmission protocols |

| | |
|---|---|
| ISO/IEC 14816: | Road traffic and transport telematics – automatic vehicle and equipment identification – numbering and data structures |
| ISO/IEC 15459: | Information technology – automatic identification and data capture techniques – unique identifiers for item management<br>Part 1: Unique identification of transport units<br>Part 2: Registration procedures<br>Part 3: Common rules for unique identification<br>Part 4: Unique item identification for supply chain management<br>Part 5: Unique identification of returnable transport items (RTIs)<br>Part 6: Unique identification for product groupings in material lifecyle management |
| ISO/IEC 15693: | Identification cards – contactless integrated circuit(s) cards – vicinity cards<br>Part 1: Physical characteristics<br>Part 2: Air interface and initialisation<br>Part 3: Protocols<br>Part 4: Registration of applications/issuers |
| ISO/IEC 15961: | Information technology – RFID for i*tem management* – Data protocol: application interface |
| ISO/IEC 15962: | Information technology – RFID for *item management* – Data protocol: data encoding rules and logical memory functions |
| ISO/IEC 15963: | Unique identification of RF tag and registration authority to manage the uniqueness<br>Part 1: Numbering system<br>Part 2: Procedural standard<br>Part 3: Use of the unique identification of RF tag in the integrated circuit |
| ISO/IEC 17358: | Supply chain application for RFID – application requirements |
| ISO/IEC 17363: | Supply chain application for RFID – freight containers |
| ISO/IEC 17364: | Supply chain application for RFID – transport units |
| ISO/IEC 17365: | Supply chain application for RFID – returnable transport items |
| ISO/IEC 17366: | Supply chain application for RFID – product packaging |
| ISO/IEC 17367: | Supply chain application for RFID – product tagging |
| ISO/IEC 18000: | RFID for i*tem management* – air interface<br>Part 1: Generic parameter for air interface communication for globally accepted frequencies<br>Part 2: Parameters for air interface communication below 135 kHz<br>Part 3: Parameters for air interface communication at 13.56 MHz<br>Part 4: Parameters for air interface communication at 2.45 GHz<br>Part 5: Parameters for air interface communication at 5.8 GHz<br>Part 6: Parameters for air interface communication – UHF frequency band (868 / 915 MHz) |
| ISO/IEC 18001: | Information technology – radio frequency identification for item management – application requirements profiles. |
| ISO/IEC 18046: | RFID tag and interrogator performance test methods |
| ISO/IEC 18047: | Information technology – radio frequency identification device conformance test methods – test methods for ISO/IEC 18000<br>Part 3: Test methods for air interface communications at 13.56 MHz<br>Part 4: Test methods for air interface communications at 2.45 GHz<br>Part 7: Test methods for air interface communications at 433 MHz |
| ISO/IEC 18092: | Near field communication (NFC) interface and protocol-1 (NFCIP-1) |
| ISO/IEC 18185: | Freight containers – radio frequency communication protocol for electronic seal<br>Part 1: Communication protocol<br>Part 2: Application requirements<br>Part 3: Environmental characteristics<br>Part 4: Data protection<br>Part 5: Sensor interface<br>Part 6: Message sets for transfer btw. seal reader and host computer<br>Part 7: Physical layer |

| | |
|---|---|
| ISO/IEC 19762: | Information technology AIDC techniques – harmonized vocabulary<br>Part 1: General terms relating to automatic identification and data capture (AIDC).<br>Part 2: Optically readable media (ORM)<br>Part 3: Radio frequency identification. |
| ISO/IEC 21007: | Gas cylinders – identification and marking using radio frequency identification technology<br>Part 1: Reference architecture and terminology<br>Part 2: Numbering schemes for radio frequency |
| ISO/IEC 21481: | Near Field Communication (NFC) Interface and Protocol-2 (NFCIP-2). |
| ISO/IEC 22536: | Near Field Communication (NFC) Interface and Protocol-1 (NFCIP-1); RF Interface Test Methods |
| ISO/IEC 23389: | Freight containers – read write radio frequency identification (RFID). |
| ISO/IEC 23917: | Near Field Communication (NFC) Interface and Protocol-2 (NFCIP-2); Protocol Test Methods for NFC |
| ISO/IEC 24710: | Information technology AIDC techniques – RFID for item management – ISO/IEC 18000 Air Interface Communications – elementary tag license-plate functionality for ISO/IEC 18000 air interface definitions |
| ISO/IEC 24729: | Information technology – radio frequency identification for item management – implementation guidelines<br>Part 1: RFID-enabled labels and packaging<br>Part 2: Recyclability of RF tags<br>Part 3: RFID interrogator/antenna installation |
| ISO 69873: | *Tools and clamping devices with data carriers – dimensions for data carriers and their fitting space* |
| S-918-00: | AAR Manual of Standards and Recommended Practices Railway Electronics, S-918: *Standard for Automatic Equipment Identification*. Adopted: 1991; Revised: 1995, 2000 |
| VDE 0848: | *Safety in electromagnetic fields (Part 2 – Protection of people in the frequency range 30 kHz to 300 GHz, Part 4A2 – Protection of people in the frequency range 0 Hz – 30 kHz*. |
| VDE 0750: | See EN 50061. |
| VDI 4470 – Teil 1: | *Warensicherungssysteme – Kundenabnahmerichtlinie für Schleusensysteme*. On-site determination of the detection rate when EAS systems are put into operation. |
| VDI 4470 – Teil 2: | *Warensicherungssysteme – Kundenabnahmerichtlinie für Deaktivierungsanlagen*. Testing of deactivation equipment for EAS systems. |

### *14.2.3 Sources for Standards and Regulations*

*DIN, ISO, VDE, VDI* and other standards can be purchased in Germany from:

Beuth Verlag GmbH,
Burggrafenstr. 3
D-10772 Berlin
Germany

Telecommunications standards (EN, I-ETS) can be downloaded free of charge from:

European Telecommunications Standards Institute (ETSI)
650 Route des Lucioles
F-06921 Sophia Antipolis
CEDEX-France
Homepage: http://www.etsi.org

German national legislation and the *Amtsblatt* (Official Journal) can be obtained from:

Bundesnetzagentur für Elektrizität, Gas, Telekommunikation, Post und Eisenbahnen
Tulpenfeld 4, 53113 Bonn
Germany
Tel.: +49-0228-14 0
Fax.: +49-0228-14 8872
Homepage: http://www.bundesnetzagentur.de/

An overview of regulation in the 44 member states of CEPT, plus all documents of the European Radiocommunication Committee (ERC), can be downloaded free of charge from:

European Radiocommunications Office (ERO)
Peblingehus
Nansensgade 19
DK-1366 Copenhagen
Denmark
Homepage: http://www.ero.dk

General notes on *CE marking* in the EC internal market, plus notes on the *R&TTE Directive* (1999/5/EC) for radio and telecommunications terminal equipment can be found at the following websites:

http://europa.eu.int/comm/enterprise/newapproach/legislation/guide/legislation.htm
http://europa.eu.int/comm/enterprise/rtte

## 14.3 Printed Circuit Board Layouts

### *14.3.1 Test Card in Accordance with ISO 14443*

This section contains the layout, component mounting diagram, and jumper settings for the circuit introduced in Section 10.1.1.2. This is a contactless test card used to generate a load modulation signal in accordance with ISO 14443 at a reader.[1]

**Table 14.1** Jumper position for setting the supported modulation procedures

| Jumper setting* | Jp1 | Jp2 | Jp3 | Jp4 | Jp5 | Jp6 | Jp7 | Jp8 | Jp9 |
|---|---|---|---|---|---|---|---|---|---|
| Don't transmit | – | – | 3.3 | – | – | – | – | – | – |
| Manchester 1111 | 1.3 | 2.2 | 3.3 | Down | – | – | – | – | – |
| Manchester 1010 | 1.3 | 2.1 | 3.3 | Down | – | – | – | – | – |
| BPSK 1111** | 1.3 | 2.3 | 3.3 | – | – | – | – | – | – |
| BPSK 1010, Phase 0° | 1.2 | 2.3 | 3.3 | – | Right | – | – | – | – |
| BPSK 1010, Phase $+\pi/2$ | 1.2 | 2.3 | 3.3 | – | Left | – | – | – | – |
| BPSK external data, phase 0° | 1.1 | 2.3 | 3.1 | Down | Right | – | – | – | – |
| BPSK external data, phase $+\pi/2$ | 1.1 | 2.3 | 3.1 | Up | Left | – | – | – | – |
| R-modulation | – | – | – | – | – | Off | Off | Right | Down |
| C-modulation | – | – | – | – | – | On | On | Left | Up |

*The card is held such that the antenna is to the right.
**Subcarrier unmodulated.

[1] Reader: 13.56 MHz. Contactless smart card: load modulation with subcarrier 847 kHz. Subcarrier ASK modulated with Manchester coding or BPSK (2-FSK) modulated with NRZ coding.

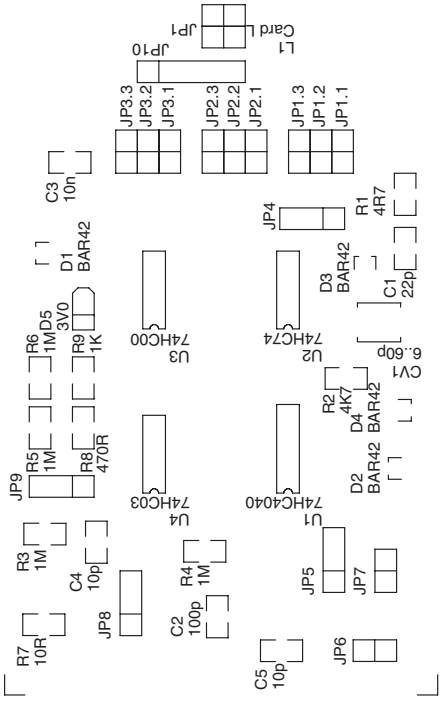


**Figure 14.1** Component mounting diagram of the ISO 14443 test card. The transponder's antenna is in the upper half of the printed circuit board

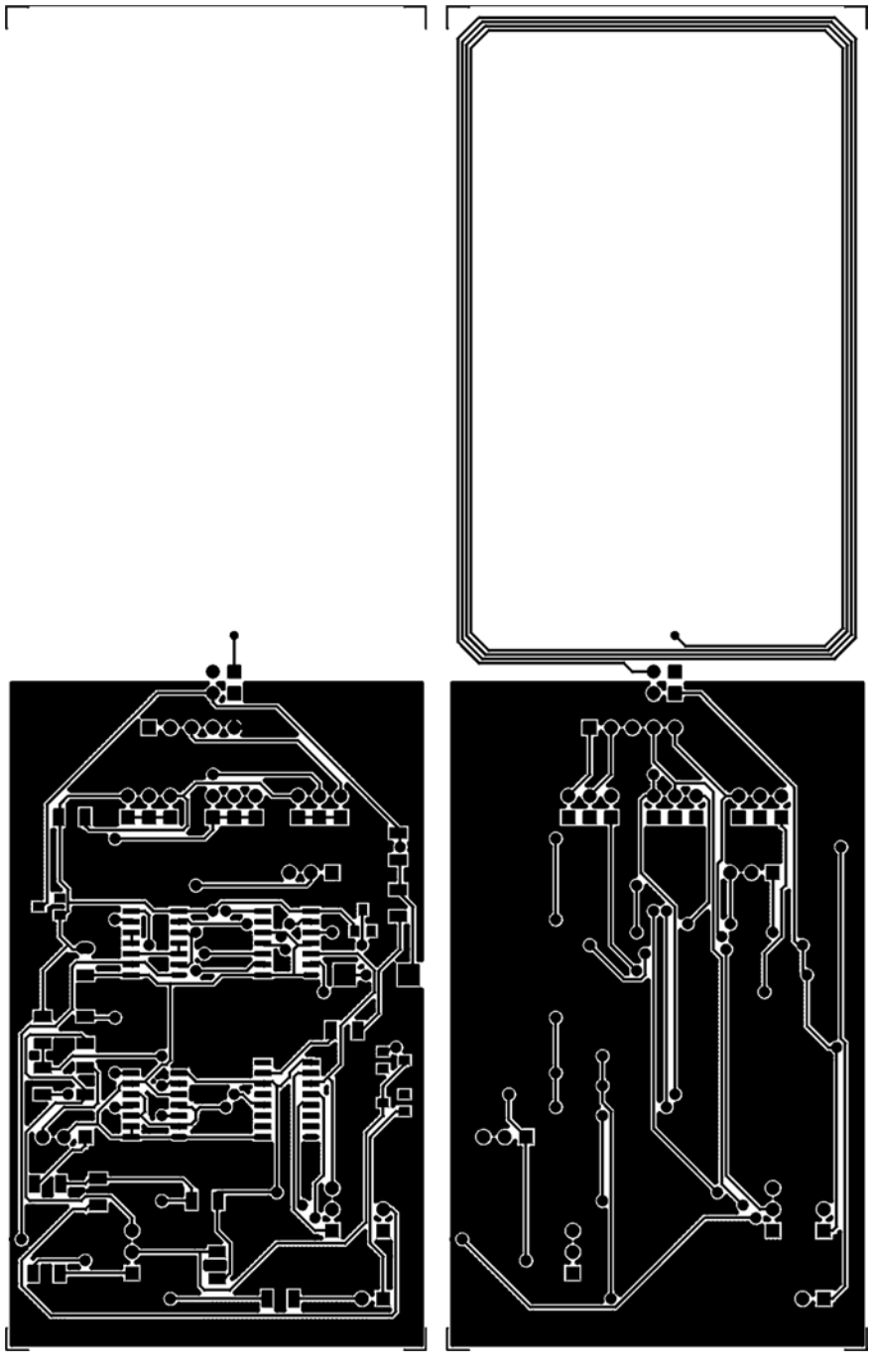

**Figure 14.2** Printed circuit board layout of the test card, front and back

**Table 14.2** Parts list for test chip card

| Component | Value/type | Comment |
|---|---|---|
| C1 | 22 pF | – |
| CV1 | 6–60 pF | Adjusting of the transponder resonant frequency |
| C2 | 100 pF | – |
| 7C3 | 10 nF | – |
| C4 | 10 pF | Modulation capacitor |
| C5 | 10 pF | Modulation capacitor |
| R1 | 4.7 Ω | – |
| R2 | 4.7 kΩ | – |
| R3, R4, R5, R6 | 1 MΩ | – |
| R7 | 10 Ω | Shunt resistor during C-modulation |
| R8 | 470 Ω | Shunt resistor during R-modulation |
| R9 | 1–1.8 kΩ | Modulation resistor |
| D1, D2, D3, D4 | BAR42 | – |
| D5 | 3V8 | Zenor diode |
| L1 | ~3.5 μH | Conductor loop in the layout |
| U1 | 74HC4040 | Asynchronous 12-bit binary counter |
| U2 | 74HC74 | Dual D flip-flop |
| U3 | 74HC00 | 4× NAND |
| U4 | 74HC03 | 4× NAND, Open Collector |

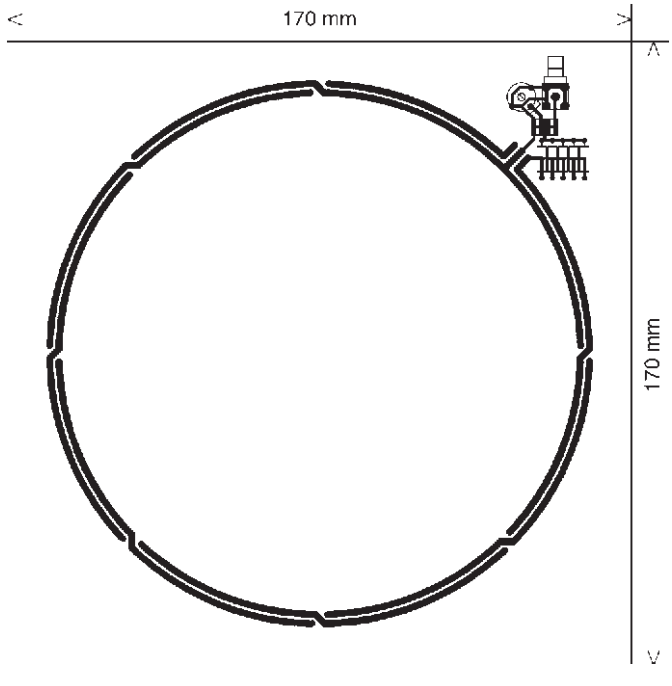


**Figure 14.3** Layout of the field generator coil – front (reproduced by permission of Philips Semiconductors, Hamburg)

**Figure 14.4** Layout of the field generator coil – back (reproduced by permission of Philips Semiconductors, Hamburg)

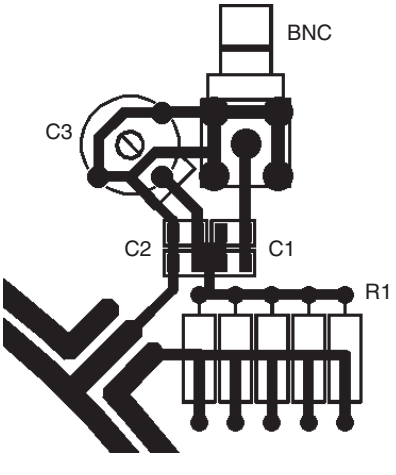


**Figure 14.5** Interface circuit of the field generator coil – component mounting diagram

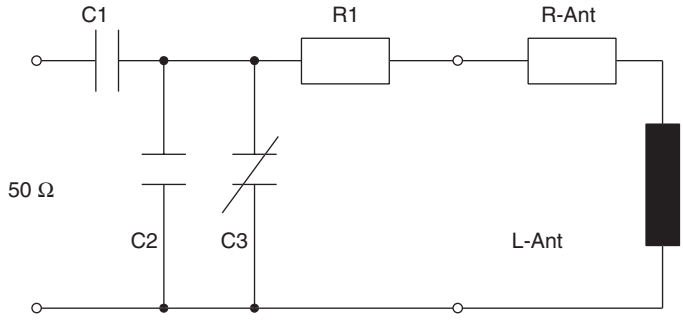


**Figure 14.6** Interface circuit of the field generator coil – circuit

**Table 14.3** Parts list of the interface circuit

| Component | Value | Comment |
|---|---|---|
| C1 | 47 pF | – |
| C2 | 180 pF, 33 pF | Parallel |
| C3 | 2–27 pF | Trimming capacitor |
| R1 | 5 × 4.7 Ω | Parallel |

**Figure 14.7** The reader in a plastic housing in stand-alone mode reads out the UID of a contactless smart card (reproduced by permission of Elektor, http.//www.elektor.com)

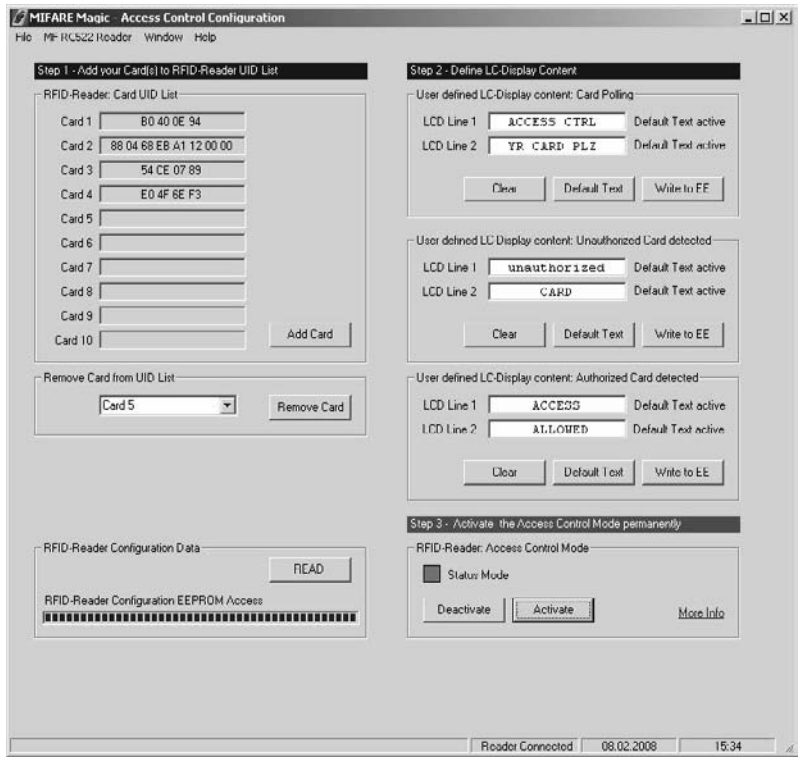


**Figure 14.8** Screen dump of the program 'MIFARE Magic' for confirming stand-alone' operation (reproduce by permission of Gerhard Schalk)

The layout of the test card is available to download from the author's homepage (http://rfid-handbook.de/downloads) as a Postscript or Gerber file.

## *14.3.2 Field Generator Coil*

The layout depicted shows the *field generator coil* described in Section 9.2.4. However, this coil is also excellently suited for use as an antenna in the frequency range of 13.56 MHz.

## *14.3.3 Reader for 13.56 MHz*

This section includes the layout and component diagram of the reader described in Section 11.3.2. It was first published in *Elektor* 09/2006 by Gerhard Schalk (NXP Semiconductors, Schalk, 2006) and is reproduced by permission of Elektor international media B.V. (http://www.elektor.com)

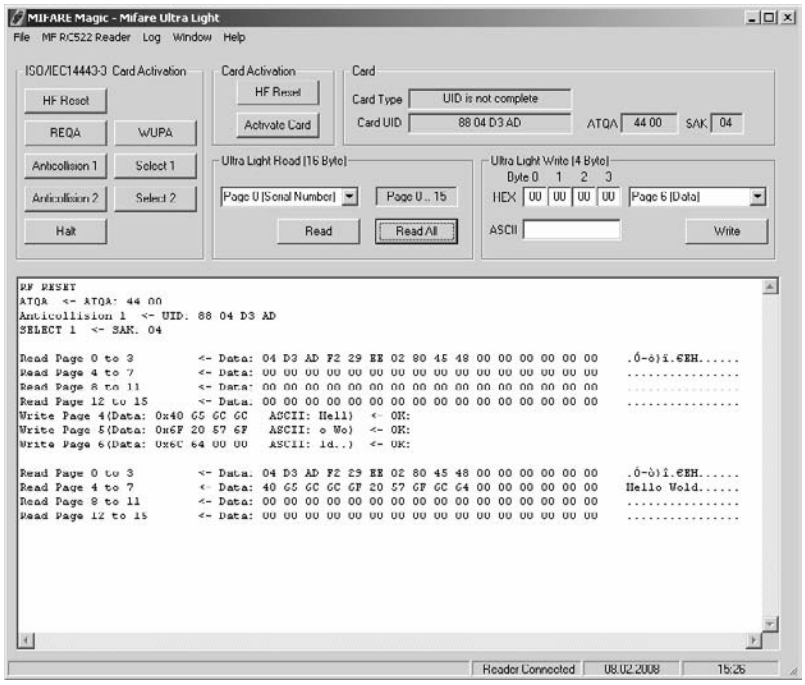


**Figure 14.9** Screen dump of the program 'MIFARE Magic' during a read process of the transponder (reproduced by permission of Gerhard Schalk)

The reader shown can communicate with all transponders that are compatible with ISO/IEC 14443-A or *MIFARE*. This reader was developed with the goal to be as universally applicable as possible. It can be directly operated on a PC with the USB interface of the reader. In addition, the reader can be operated in stand-alone mode, for instance for *access control*. A housing and LCD display complete the reader, but they are not always necessary (Schalk, 2006).

The circuit and the corresponding freeware PC program 'MIFARE Magic' make it possible to easily read and write on diverse ISO/IEC 14443-A and MIFARE transponders (e.g. NXP MIFARE UltraLight, MIFARE 1K and MIFARE 4K) without requiring additional reader software. The user interface of the PC program 'MIFARE Magic' also provides the possibility to send individual commands via mouse click to a transponder and thus to check the transponder's properties in a very simple way.

It is even simpler in stand-alone operation when an LCD display is connected to the reader. Once the reader is supplied with voltage it polls for transponders within a read range of 5 cm. In stand-alone operation, the PC programme can be used to easily define which data of a read-out transponder should be displayed and which actions the reader should carry out (Schalk, 2006). If a transponder is situated in the read range it is possible to display only its *serial number* (UID) or to activate an access control function. In this case, preconfigured contents are displayed and several actions are carried out (Figure 14.8).

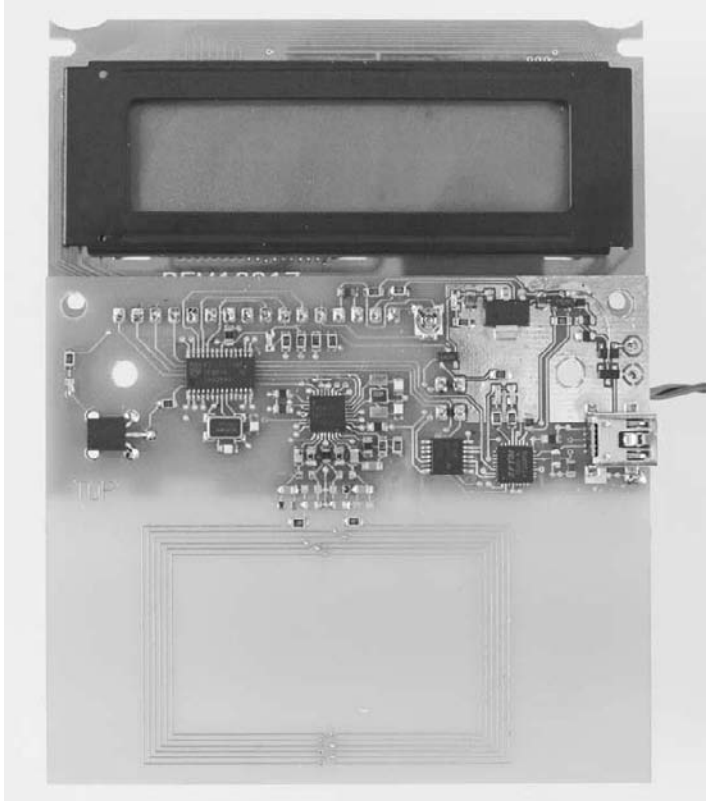

**Figure 14.10** The assembled board of the reader with soldered-on LCD display. The reader antenna can been seen at the bottom of the figure. (reproduced by permission of Elektor, http//www.elektor.de)

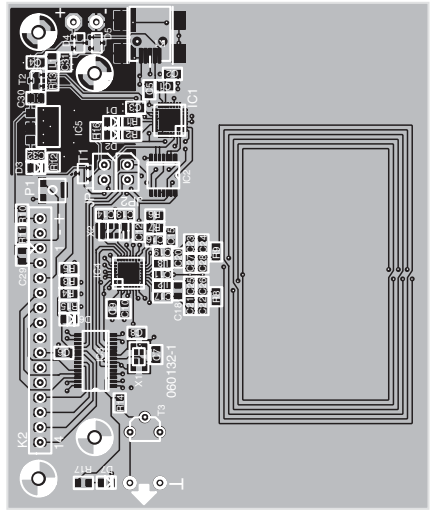


**Figure 14.11** Solder resist mask of the reader board (reproduced by permission of Elektor, http//www .elektor.de)

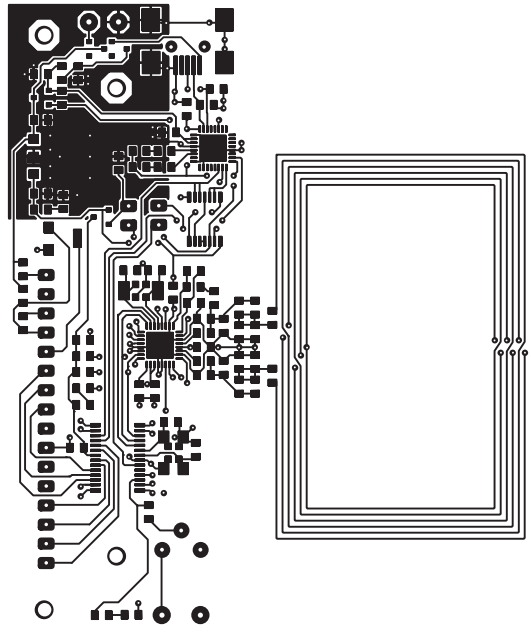

**Figure 14.12** Layout of the reader board (reproduced by permission of Elektor, http//www.elektor.de)

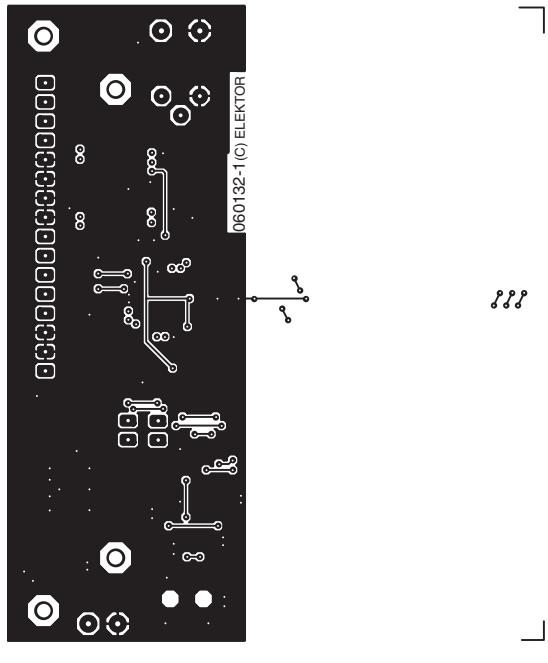


**Figure 14.13** Back view of the layout of the reader board (reproduced by permission of Elektor, http//www .elektor.de)

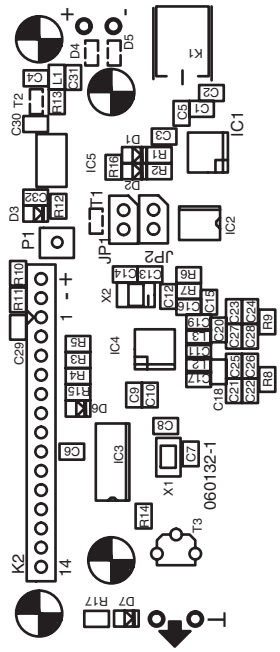


**Figure 14.14** Component diagram of the reader board (reproduced by permission of Elektor, http//www .elektor.de)

Further information regarding the reader are available at the website of Elektor Verlag: http://www.elektor.com/magazines/2006/september/elektor-rfid-reader.58524.lynkx

The webpage includes a complete *construction manual* as a pdf file, all software files for PC and microcontroller in a zip file as well as three additional pdf files with information on how to fit the reader into a housing, its installation and usage. These downloads are free of charge. Elektor Verlag also commercially distributes assembled and tested boards.

# References


Abramson, N. (n.d.) *Multiple access in wireless digital networks*. ALOHA Networks Inc., San Francisco; http://www.alohanet.com/sama/samatppr.html

Agilent Technologies (n.d.) *Technical Data Sheet: Surface Mount Microwave Schottky Detector Diodes – HSMS-286x Series*

Anderson, R. (1998) The use of Polymer Thick Film for printing of Contactless Smartcard Coils. DuPont Photopolymer & Electronic Materials. *Smart Card Technologies and applications – second workshop on smart card technologies and applications*. IEEE Tagungsband, Berlin, 16 November 1998

Ampélas, A. (1998) *Towards a city pass, ICARE-CALYPSO, two European projects for ticketing, electronic money and city services*

Amtsblatt der Europäischen Union (2004) *Verordnung (EG) Nr. 2252/2004 des Rates vom 13. Dezember 2004 über Normen für Sicherheitsmerkmale und biometrische Daten in von den Mitgliedstaaten ausgestellten Pässen und Reisedokumenten* (Council Regulation (EC) No 2252/2004 of 13 December 2004 on standards for security features and biometrics in passports and travel documents issued by Member States). http://europa.eu.int/

Anselm, D. (1995) *Diebstahl von Kraftfahrzeugen mit Wegfahrsperren*. Allianz-Zentrum für Technik, München

Anselm, D. (1996) *Voller Erfolg der elektronischen Wegfahrsperre*. Allianz-Zentrum für Technik, München 21 March 1996

Atmel Corporation (1994) *RFID-ASIC Fact Sheet*. March 1994

Atmel Corporation (1998) *Asset Identification EEPROM, AT24RF08*. San Jose, CA, U.S.A., http://www.atmel.com

Bachthaler, R. (1997) Auswahlkriterien für elektronische Datenspeicher. *ident*, **3**

Baddeley, D. and Ruiz, C. (1998) *Test PICC – Type B Proximity Cards, Technical Contribution – ISO/IEC JTC1/SC17/WG8/TF2N242*. Motorola, Genf 01/1998

Baur, E. (1985) *Einführung in die Radartechnik*. Teubner Studienskripte, Stuttgart 1985

Bensky, A. (2000) *Short-range wireless communication, fundamentals of RF system design and application*, LLH Technology Publishing, USA

Berger, D. (1998) Contactless smart card standards and new test methods. In: *Smart Card Technologies and applications – second workshop on smart card technologies and applications*, IEEE Tagungsband, Berlin, 16. November 1998

BiStatix™ Technology (1999) *A Whitepaper, Version 4.1*. Motorola Inc., March 1999

Bundesministerium des Innern (n.d.) *Hintergrundinformation zum ePass: Technik & Sicherheit*, http://www.bmi.bund.de/

BMWi (n.d.) Bundesministerium für Wirtschaft und Technologie, Internationale Zusammenarbeit: Internationale Fernmeldeunion (ITU), http://www.bmi.bund.de/

Bnetzag (n.d) Bundesnetzagentur für Elektrizität, Gas, Telekommunikation, Post und Eisenbahnen, http://www.bundesnetzagentur.de/



*RFID Handbook: Fundamentals and Applications in Contactless Smart Cards, Radio Frequency Identification and Near-Field Communication, Third Edition.* Klaus Finkenzeller


© 2010 John Wiley & Sons, Ltd

Bögel, G. vom, Scherer, K. and Bollerott, M. (1998) Transponder für Ident- und Telemetrie-Anwendungen. *Kommunikation in der Logistikkette: Automatische Identifikation, Tagungsband SMAID 98*, Umschau Zeitschriftenverlag

Bögel, G. vom and Niederholz, M. (2001) Transpondersystem zur Messung des Augeninnendrucks. *Electronic Embedded Systeme* **5** http://www.systeme-online.de

Borgonovo, F. and Zorzi, M. (1997) Slotted ALOHA and CDPA – A comparison of channel access performance in cellular systems. *Wireless Networks* **3**

Bosse, G. (1969) *Grundlagen der Elektrotechnik – Das elektrostatische Feld und der Gleichstrom. B.I.-Hochschultaschenbücher Band 182*, Mannheim 1969

Braunkohle (1997) Elektronische Kennzeichnung von Gefahrstoffen. *Braunkohle* **2**

Bruhnke, M. (1996) Kontaktlose Chipkartentechnologie in der Automobilindustrie (Immobilizer). *Vortragsskript zur ChipCard 96*, Eching 1996

BSI (2005) *Digitale Sicherheitsmerkmale im ePass*, Bundesamt für Sicherheit in der Informationstechnik, June 2005, http://www.bsi.bund.de/fachthem/epass/index.htm

Bührlen, M. (1995) Mikron-Chip macht Gasflaschen intelligent. *Card-Forum* **11**

Bulst, W.-E., Fischerauer, G. Reindl, L. (1998) State of the art in wireless sensing with surface acoustic waves. *Proceedings of the 24th Annual Conference of the IEEE Industrial Electronics Society IECON 1998*, pp 2391–2396

Caspers, F. (1997) *Aktuelle Themen der Kfz-Versicherung*. Allianz Versicherungs-AG, München, 25 March 1997

CCC (2005) Der ePass – ein Feldtest, 22. *Chaos Communication Congress*, December 2005, http://events.ccc.de /congress/2005/fahrplan.de.html

ChampionChip (n.d.) *Werbeschrift: Real-Time ChampionChip – Das Zeitmess- und Identifikationssystem für den aktiven Sport*. Sport Team, Drebber

Cheung, H. (2005) *Black Hat/Defcon: Hackers Go Back to Vegas* http://www.tgdaily.com/2005/08/13 /black_hat/page2.html

Clasen, M., Jansen, R. and Hustadt J. (2205) Aktueller Status der Standardisierung bei RFID-Anwendungen für die Logistik, erschienen. *RFID in der Logistik – Erfolgsfaktoren für die Praxis*, Deutscher Verkehrs-Verlag, Hamburg 2005, http://www.bvl.de

Cloaktec (n.d.) *Cloaktec™ EMI/RFI Shielding*, http://www.mobilecloak.com/

Couch II, L. W. (1997) *Digital and analog communication systems*. Prentice-Hall Inc, London

Czako, J. (1997) Neue Innovationsplattform für Verkehrsunternehmen. Tagungsband – OMNICARD 1997, *Time*, Berlin

DEFCON (2005) *RFID World record attempt*, http://www.makezine.com/blog/archive/2005/07/_defcon_rfid _wo.html

Dobrinski, P., Krakau, G and Vogel, A (1984) Physik für Ingenieure. B. G. Teubner, Stuttgart

Doerfler (1994) Mikroelektronische Authentifizierungssysteme für die Serienausstattung von Kfz. *GME-Fachbericht 13, Identifikationssysteme und kontaktlose Chipkarten*. vde-Verlag, Berlin

Droschl, G. (1997) Der Markt für kontaktlose Chipkarten – Von der Vision zur Realität. Tagungsband – OMNICARD 1997, *Time*, Berlin

Dziggel, K. P (1997) The SOFIS Auto-ID Identification System. *Vortragsmanuskript zu SMAID 97*. University of Dortmund

ECMA (2006) *ECMA-373, Near Field Communication Wired Interface (NFC-WI)*, June 2006, http://www.ecma-international.org/publications/files/ECMA-ST/ECMA-373.pdf

Ernst, H. (1996) EURO-Balise S21 – Meilenstein für das ETCS. *ETR – Eisenbahntechnische Rundschau 45*, October 1996

EAN.UCC (1999) *White Paper on Radio Frequency Identification*. EAN-International & UCC Inc., http://www.ean-int.org

EAN.UCC (2000) *RFID and the EAN.UCC System*. GTAG Project Team. EAN-Internationa & UCC Inc., http://www.ean-int.org

EPC Forum (n.d.) *Institut, Management + Consulting AG*, http://epc-forum.de

EPCglobal Inc. (2004) *The EPCglobal Network: Overview of Design, Benefits & Security*, http://www .epcglobalinc.org

EPCglobal Inc. (2005) *EPC Generation 1 Tag Data Standards Version 1.1 Rev. 1.27*, http://www.epcglobalinc.org

ERC (2002) *ERC recommendation 70-03* (Tromso 1997 and subsequent amendments) relating to the use of short range devices (SRD). Recommendation adopted by the frequency management, radio regulatory and spectrum engineering working groups, European Radiocommunications Committee (ERC), http://www.ero.dk/

ERC (2000) *ERC Report 84: CEPT marking and the R&TTE directive*. European Radiocommunications Committee (ERC), Lisbon, http://www.ero.dk/

ERO. (1995) *Report of project team SE24 on the sharing between the inductive systems and radiocommunication systems in the band 9 ... 135 kHz*. 6 October 1995

Escort Memory Systems (1998a) *RFID Application – Case Study: Agricultural Equipment Manufacturer, John Deere Company*. Escort Memory Systems, Scotts Valley, California

Escort Memory Systems (1998b) *RFID Application – Case Study: Automotive Engine Manufacturer, General Motors*. Escort Memory Systems, Scotts Valley, California

Escort Memory Systems (1998c) *RFID Application – Case Study: Meat Processor, J. M. Schneider Meats*. Escort Memory Systems, Scotts Valley, California

EURO I. D. (n.d.) *Datenblatt: Anwendungsbeispiele für das trovan® RF-Identifikationssystem – Dienstleistungen – Abfall – Logistik*. EURO I.D. Identifikationssysteme GmbH & Co. KG, Weilerswist

Finke, T. and Kelter, H. (n.d.) *Abhörmöglichkeiten der Kommunikation zwische Lesegerät und Transponder am Beispiel eines ISO 14443-Systems*, Bundesamt für Sicherheit in der Informationstechnik – BSI, http://www.bsi.de/fachthem/rfid/whitepaper.htm

Fislage, M. and Friedrich, U. (2002) Palomar: RFID bis 4 Meter. *elektronik industrie*, January 2002, Hüthig Verlag, Heidelberg

Fleckner, H. (1987) Dioden und ihre Anwendung in Frequenzvervielfachern für den Mikrowellenbereich. *UKW-Berichte* **1**, Verlag UKW-Berichte, Baiersdorf

Fliege, N. (1996) *Digitale Mobilfunksysteme*. B. G. Teubner, Stuttgart 1996

Fricke, H., Lamberts, K. and Patzelt, E. (1979) *Grundlagen der elektrischen Nachrichtenübertragung*. B. G. Teubner Verlag, Stuttgart 1979

Friedrich, U. and Annala, A. (2001) Palomar – a European answer for passive UHF RFID applications. *RFID Innovations 2001 Converence*; http://vicarage-publications.co.uk

Fries, M. and Kossel, M. (n.d.) *Aperture Coupled Patch Antennas for an RFID-System using Circular Polarization Modulation*. ETH Zürich; http://www.ifh.ee.ethz.ch/~kossel/publikationen.html

Fumy, W. (1994) *Kryptographie*. R. Oldenburg Verlag, Munich–Vienna

Giesecke & Devrient (1997) *Datenblatt – Giesecke & Devrient: Referenzprojekte – kontaktlose Chipkarte RM8k-MIFARE®*. Munich

Geers, R., Puers, B., Goedseels, V. and Wouters, P. (1997) *Electronic Identification, Monitoring and Tracking of Animals*. CAB International, Wallingford UK

Gillert, F. (1997) Quellensicherung auf Basis von EAS-Technologien. *ident*, **3**

Glesner, D. (1997) Erst simulieren – dann bauen, Rechnerische Behandlung von Magnetantennen. CQ DL **1**, DARC-Verlag Baunatal; http://www.darc.de

Glogau, R. (1994) Geheimsache. *DOS*, **12**, DMV Verlag

Glover, B. and Bhatt, H. (2006) RFID *Essentials*, O'Reilly Media Inc., http://www.oreilly.de/catalog/rfid/

Golomb, W. S. (1982) *Shift Register Sequences*. Aegean Park Press, Laguna Hills – California

Grassie, K. (2007) Near Field Communication – Kabellose Übertragung. *Funkschau* **18**, http://www.funkschau.de

GSM Association (2007) *Mobile NFC technical guidelines, Version 1.0*, http://www.gsmworld.com/documents/gsma_nfc_tech_guide_vs1.pdf

GTAG (2001) *Minimum protocol and performance requirement - part 1: resolution process. GTAG-prN0150drMPPR, Version 1.3*, EAN-Internationa & UCC Inc., http://www.ean-int.org

Haberland, M. (1996) Gedächtnis ohne Ladungsträger, Ferroelektrische RAMs – die Speicher der Zukunft. *Elektronik* **25**

Haghiri, Y. and Tarantino, T. (1999) *Vom Plastik zur Chipkarte*. Carl Hanser Verlag, Munich

Hamann, P. (1996) Der Chip als Fahrkarte. *Verkehrstechnischer Express* **2**

Hamann, U. (1997) Optimierte Halbleiter-Chips für kontaktlose Chipkarten-Applikationen. Tagungsband – OMNICARD 1997, *Time*, Berlin

Hancke, G. (2005) *A Practical Relay Attack on ISO 14443 Proximity Cards*, Cambridge, 02/2005, http://www.cl.cam.ac.uk/~gh275/

Hancke, G. and Kuhn, M. G. (2005) *Distance Bounding Protocols for Contactless/RFID Devices*, Cambridge, 03/2005, http://www.cl.cam.ac.uk/~gh275/

Hanex (n.d.) *Sales presentation: Hanex RFID-System for Metal. HXID-System*, Hanex Co., Ltd., Japan

Hawkes, P. (1997) *Singing in Concert – Some of the possible methods of orchestrating the operation of multiple RFID – Tags enabling fast, efficient reading without singulation. Amsterdam*, 19 February 1997

Herter, E. and Lörcher, W. (1987) *Nachrichtentechnik – Übertragung, Vermittlung und Verarbeitung. 4. Auflage*, Carl Hanser Verlag, Munich

Hewlett Packard 956-4 (n.d.) *Application Note 956-4: Schottky Diode Voltage Doubler*.

Hewlett Packard 963 (n.d.) *Application Note 963: Impedance Matching Techniques for Mixers and Detectors*

Hewlett Packard 986 (n.d.) *Application Note 986: Square Law and Linear Detection*

Hewlett Packard 988 (n.d.) *Application Note 988: All Schottky Diodes are Zero Bias Detectors*

Hewlett Packard 1088 (n.d.) *Application Note 1088: Designing the virtual Battery*

Hewlett Packard 1089 (n.d.) *Application Note 1089: Designing Detectors for RFID Tags*

Homburg, D. (1996) Barcodeleser in der Automobilindustrie. *ident* **1**, Umschau Zeitschriftenverlag, Frankfurt

ident (1996) *ident* **1**, UMSCHAU Zeitschriftenverlag, Frankfurt

IDESCO (n.d.) *IDESCO Technical Information: IDESCO MICROLOG® 1k Memory*. Fa. Idesco, Oulu-Finland

ISD (1996) *Integrated Silicon Design PTY LTD (ISD): Training Manual*. Adelaide

ITT (1975) *Intermetall Semiconductors ITT: Kapazitätsdioden, Schalterdioden, PIN-Dioden – Grundlagen und Anwendungen*. Freiburg 1975

Johne, A. (2008) *Der Zahlungsverkehr am Point-of-Sale, unveröffentlichtes Manuskript sowie persönliches Gespräch*, Giesecke & Devrient, Munich, April 2008

Jörn, F. (1994) WIE – Elektronische Diebstahlsicherung. *FAZ*

Juels, A., Rivest, R. and Szydlo, M. (n.d.) *The Blocker Tag: Selective Blocking of RFID Tags for Consumer Privacy*, http://rsasecurity.com/

Jurianto, J. and Chia, M. Y. W. (n.d.a) *Voltage, Efficiency Calculation and Measurement of Low Power Rectenna Rectifying Circuit*. Singapore Science Park, Centre for Wireless Communications; http://leonis.nus.edu.sg

Jurianto, J. and Chia, M. Y. W. (n.d.b) *Zero Bias Schottky Diode Modell For Low Power, Moderate Current Rectenna*. Singapore Science Park, Centre for Wireless Communications; http://leonis.nus.edu.sg

Jurisch, R. (1994) Coil on Chip – monolithisch integrierte Spulen für Identifikationssysteme. *GME-Fachbericht, Identifikationssysteme und kontaktlose Chipkarten*. vde-Verlag, Berlin

Jurisch, R. (1995) mic3, Die neue kontaktlose Chipkartentechnologie. Card Forum **3**

Jurisch, R. (1998) Transponder mit integrierter Sensorik. *Elektronik* **18**

Kern, C. (2005) *Anwendungen von RFID-Systemen*, Springer Verlag, Berlin, http://www.rfid-application.org/

Kern, C. (1994) *Injektate zur elektronischen Tieridentifizierung. Working paper 205*, Kuratorium für Technik und Bauwesen in der Landwirtschaft e. V. (KTBL), Darmstadt (KTBL-Schriften-Vertrieb of Landwirtschaftsverlag GmbH, Münster-Hiltrup)

Kern, C. and Wendl G. (1997) Tierkennzeichnung – Einsatz elektronischer Kennzeichnungssysteme in der intensiven und extensiven Rinderhaltung am Beispiel von Deutschland und Australien. *Landtechnik* **3**

Kern, C. J. (1997) *Technische Leistungsfähigkeit und Nutzung von injizierbaren Transpondern in der Rinderhaltung. Forschungsbericht Agrartechnik – Nr. 316*, Dissertation, Landtechnik Weihenstephan, (Bezugsquelle: Institut für Landtechnik Weihenstephan, Vöttinger Strasse 36, D-85354 Freising)

Kleist, R., Chapman, T., Sakai, D. and Jarvis, B. (2004) *RFID Labeling*, Printronix, Inc., 2004, http://www.printronix.com

Klindtworth, M. (1998) *Untersuchung zur automatisierten Identifizierung von Rindern bei der Qualitätsfleischerzeugung mit Hilfe injizierbarer Transponder. Forschungsbericht Agrartechnik – Nr. 319*, Dissertation, Technische Universität München, (Distribution: Technische Universität München, Institut und Bayerische Landesanstalt für Landtechnik, Vöttinger Strasse 36, D-85254 Freising)

Knapich, N. (2008) Glastransponder, Identifikation im Stecknadelformat, *RFID-im-Blick*, February 2008, http://rfid-im-blick.de/

Knott, E. F. (n.d.) *Radar Cross Section*. Artech House, London

Koch, D. and Gahr, P. (1998) Elektronische Schließsysteme. *Baumeister – Zeitschrift für Architektur* **3**, Callwey Verlag, Munich

Kossel, M. and Benedicter, H. (n.d.) *Circular Polarized Aperture Coupled Patch Antennas for an RFID System in the 2.4 GHz ISM Band*. ETH Zürich; http://www.ifh.ee.ethz.ch/~kossel/publikationen.html

Kraus, J. D. (1988) Antennas. 2nd edn, McGraw-Hill Book Company

Kraus, G. (DG8GB) (2000) Moderner Entwurf von Patch-Antennen – Part 1, *UKW-Berichte* **3**; Part 2, *UKW-Berichte* **4**; http://www.ukw-berichte.de

Krebs D. (n.d.) Unpublished manuscripts, Venture Development Corp.; http://www.vdc-corp.com

Krug, F. (DJ3RV) Mikrostreifenleitungs-Antennen. *UKW-Berichte* **2**; http://www.ukw-berichte.de

Kuchling, H. (1985) *Taschenbuch der Physik*. Verlag Hari Deutsch, Thun and Frankfurt

Kfir, Z. And Wool, A. (2005) *Picking Virtual Pockets using Relay Attacks on Contactless Smartcard Systems*, Tel Aviv, http://eprint.iacr.org/2005/052

Lahiri, S. (2005) *RFID Sourcebook*, IBM Press, Upper Saddle River NJ

Lehmann, U. (1996) Aktivitäten von Siemens zur Einführung der EURO-Balise S21. *Signal + Drahlt* (88) **12**

Leitz (n.d.) *Intelligente Werkzeuge für mehr Sicherheit und Komfort*. Fa. Leitz, Oberkochen

Lee, Y. (1999) *Antenna circuit design. AN710 – application note – microID 13,56 MHz – RFID system design guide*. Microchip; http://www.microchip.com

Lemme, H. (1993) Der Mikrorechner in der Brieftasche. *Elektronik* **20**, **22**, **26**, Franzis-Verlag, Munich

Link, W. (1997) Identifikation mit induktiven Systemen. *Ident* **1, 2**

Longo, G. (1993) *Secure digital communications*. Springer Verlag, New York

Lorenz, H. (1998a) Kontaktlose Anwendung elektronischer Geldbörsen im Verkehrswesen. *Die Chipkarte auf dem Weg zu Akzeptanz und Nutzung. Conference proceedings OMNICARD 1998*, Berlin

Lorenz, H. (1998b) Der INTER-MOBIL-PASS – Multifunktionale Nutzung der Geldkarte für kontaktlose Anwendungen im Verkehrs- und Dienstleistungsbereich. *Conference Proceedings*, Verkehrswissenschaftliche Tage

Lorenz, H. (1998c) FlexPass: Kontaktloses Medium für Bus und Bahn. *B. BI*. **4**

Mäusl, R. (1985) *Digitale Modulationsverfahren*. Hüthig Verlag, Heidelberg

Mansukhani, A. (1996) Wireless Digital Modulation. *Applied Microwave and Wireless*, November/December 1996

Mathcad (1994) Mathcad file har-lep.mcd: Vo vs. Pin calculator, based upon Harrison & Polozec, Non-squarelaw Behavior of Diode Detectors Analyzed by the Ritz-Galerkin Method, *IEEE Trans MTT* **42**(5); http://rfglobalnet.com

McLaughlin, M. (2004) *RFID Opportunity*, VeriSign Analyst Day 2004, www.verisign.com /static/MARK_MCLAU_200405241213569.pdf

Meinke, H. and Gundlach, F. W. (1992) *Taschenbuch der Hochfrequenztechnik. 5. Auflage*, Springer Verlag, Berlin/Heidelberg

Miehling, M. (1996) Die Transpondertechnik in der Praxis – Hightech für die Sicherheit. *W&S*, **10**, Hüthig GmbH, Heidelberg

Mohrs, W. (2008) Übersicht über die neuesten Aktivitäten bei ETSI, Single Wire Protocol TS 102 613, 18. *SIT-SmartCard Workshop*, Darmstadt, February 2008, http://sit.sit.fraunhofer.de/_veranstaltungen/smartcard-ws/site/WS_2008_Dokumente.php

Morel, J.-P. and Vilaseca, A. (1991) Doppler-Radar im 10 GHz-Amateurband. *UKW-Berichte* **4**, UKW-Verlag, Baiersdorf, http://www.ukw-berichte.de

Mühlberger, A. (2001) High speed public encryption on contactless smart cards. Philips Semiconductors Gratkorn GmbH, A-Gratkorn, http://www.semiconductors.philips.com/identification

Nührmann, D. (1994) *Professionelle Schaltungstechnik*. Franzis Verlag, Munich

Osborne (n.d.) *The EAN.UCC GTAG (TM) Project*. EAN-International & UCC Inc.; http://www.ean-int.org

PALOMAR (n.d.) *ISO (WD)18000-6 Mode 3, Annex 4 – Delta RCS definition*. PALOMAR submission

Panasonic (n.d.) *Technical Data Sheet: Features of ferroelectric nonvolatile memory*.

Pepperl & Fuchs (1998) Mikrowellen-Identsystem rationalisiert Montage. *Konstruktion and Engineering* Nr. 1, January 1998

Pepperl & Fuchs (n.d.a) *Mikrowellen-Identifikationssysteme in der Fertigung bei BMW*. Pepperl & Fuchs, Mannheim

Pepperl & Fuchs (n.d.b) *Fabrikautomation – Produktübersicht Identifikationssysteme*. Pepperl & Fuchs, Mannheim

Paul, R. (1993) *Elektrotechnik 1 – Felder und einfache Stromkreise. 3. Auflage*, Springer Verlag Berlin, Heidelberg

Pein, R. (1996) Hilfe bei Prüfungsfragen – Prüfsummenverfahren. *DOS* **2**

Peleschka, M. (2006) *Near Field Communication (NFC) als weiterer Baustein des 'Pervasive Computing'*, Technische Universität Wien, http://cocoon.ifs.tuwien.ac.at/lehre/praktikumsarbeiten/2006_peleschka_nfc.pdf

Philips Semiconductors (2006) *NFC delivers intuitive, connected consumer experience*, Philips Semiconductors, http://www.eetasia.com

Philipp, S. (2001) *CISC vs. RISC and a plea for peace. Enhanced Microcontroller Architecture for Smart Card ICs*. Philips Semiconductors, D-Hamburg; http://www.semiconductors.philips.com/identification

Philips Components (1994) Ferrite roof antennas for RF-identification transponders. *Datenblatt, Philips Components*, August 1994

Plotzke, O., Stenzel, E. and Frohn, O. (1994) *Elektromagnetische Exposition an elektronischen Artikelsicherungsanlagen*. Forschungsgemeinschaft für Energie und Umwelttechnologie – FGEU mbH, im Auftrag der Bundesanstalt für Arbeitsmedizin, Berlin

NXP (2007) *NXP, PN 511 Transmission Module, Product short data sheet, Rev. 3.3*, http://www.nxp.com/products/identification/nfc/

Pohl, A., Reindl, L. (1998) Measurement of physical parameters of car tires using passive SAW sensors. *AMAA – Advanced Microsystems for Automotive Applications*, pp 250–262, Springer Verlag Berlin

Praca, D. (2006) *SWP and HCI Protocol Stack Overview*, December 2006

Prawitz, U. (1996) Ident-Systeme in der Müllentsorgung – Kostensenkung für Bürger und Kommunen. *ident* **1**

Radio Equipment and Telecommunications Terminal Equipment Directive (1995) The Radio Equipment and Telecommunications Terminal Equipment Directive (1999/5/EC); http://europa.eu.int/comm/enterprise/rtte/

Rankl, W. and Effing, W. (1996) *Handbuch der Chipkarten*. 2nd Edition, Carl Hanser Verlag, Munich 1996

Rankl, W. and Effing, W. (2010) *The Smart Card Handbook*. 4th edn, John Wiley & Sons, Ltd

MFRC522 (2007) *MFRC522 Contactless Reader IC, Product Data Sheet, Public Information, Re.v 3.2*, May 2007, NXP, http://www.nxp.com/acrobat_download/other/identification/m112132.pdf

Reichel, K. (1980) *Praktikum der Magnettechnik*. Franzis Verlag, Munich

Reindl, L. and Mágori, V. (1995) Funksensorik mit passiven Oberflächenwellen-Komponenten (OFW). *VDI-Reihe 8: Mess-, Steuerungs- und Regeltechnik (Nr. 515)*, pp 62–79

Reindl, L. (1996) Passive wireless identification system using SAW devices. *Presentation at AMAA* 1996

Reindl, L. (n.d.) *Passive funkauslesbare Identifikationssysteme*. Unpublished manuscript

Reindl, L., Scholl, G., Ostertag, T., Schmidt, F. and, Pohl, A. (1998a) Funksensorik und Identifikation mit OFW-Sensoren. *Sensortagung Bad Nauheim, ITG/GMA Fachbericht 148 – Sensoren und Messtechnik*, pp 77–86, VDE Verlag

Reindl, L., Scholl, G., Ostertag, T., Pohl, A. and Weigel, R. (1998b) Wireless remote identification and sensing with SAW sensors. *Proceedings of the IEEE 1998, MMT/AP International Workshop on Commercial Radio Sensor and Communication Techniques*, pp. 83–96, Munich

Reindl, L., Scholl, G., Ostertag, T., Seisenberger, C., Hornsteiner, J. and Pohl, A. (1998c) Berührungslose Messung der Temperatur mit passiven OFW-Sensoren. *Tagungsband VDI/GMA – Temperatur 1998, VDI-Berichte Nr. 1379*, pp 93–98

Reindl, L., Scholl, G., Ostertag, T., Scherr, H., Wolff, U. and Schmidt, F. (1998d) Theory and application of passive SAW radio transponders as sensors. *IEEE, Transaction on Ultrasonics, Ferroelectrics and Frequency Control* **45** (5) 1281–1292

Rikcha (2004) Risiken und Chancen des Einsatzes von RFID-Systemen, Studie des Bundesamtes für Sicherheit in der Informationstechnik in Zusammenarbeit mit dem Institut für Zukunftsstudien und Technologiebewertung (IZT) und der Eidgenössischen Materialprüfungs- und Forschungsanstalt (EMPA), November 2004 http://www.bsi.de/fachthem/rfid/RIKCHA.pdf http://www.bsi.de/fachthem/rfid/studie.htm https://www.bsi.bund.de/contentbsi/en/publications/rfid/rikcha_en_htm.html

Rothammel (2001) Krischke A.: *Rothammels Antennenbuch*, *12. Auflage*, DARC Verlag Gmbh, Baunatal, http://www.darc.de

Roz, T. and Fuentes, V. (n.d.) *Using low power transponders and tags for RFID applications*. Firmenschrift, EM Microelectronic Marin, CH-Marin

Rueppel, R. A. (1986) *Analysis and Design of Stream Ciphers*, Springer Verlag Heidelberg

Ruppert, H. (1994) Identifizierungssysteme mit zusätzlichen Sensorfunktionen. *GME-Fachbericht Nr. 13 – Identifikationssysteme und kontaktlose Chipkarten*. vde-Verlag, Berlin

Sander, R. and Mollik, H. (1997) Ein guter Partner – RF-Identifikation in der Logistik löst Kundenprobleme. *ident* **3**

Schalk, G. H. (2006) ELEKTOR-RFID-Reader für MIFARE und ISO 14443-A, *elektor* **9**, http://www.elektor.de/jahrgang/2006/september/elektor-rfid-reader.64441.lynkx

Schenk, C. (1997) Identifikationssysteme in der Automobilindustrie. *ident* **2**

Schmidhäusler, F. (1995) *Zutrittskontrolle richtig planen – Techniken, Verfahren, Organisation*, Hüthig Verlag, Heidelberg

Schürmann, J. (1993) TIRIS – Leader in Radio Frequency Identification Technology. *Texas Instruments Technical Journal*, November/December 1993

Schürmann, J. (1994) Einführung in die Hochfrequenz-Identifikations-Technologie. *GME-Fachbericht Nr. 13, Identifikationssysteme und kontaktlose Chipkarte*, vde-verlag, Berlin

Seidel, U. (2005) *Introduction of the ePass, Country Update Germany, Interfest International e-Passport Test*, Singapore, 7–10 November 2005; http://www.ida.gov.sg/

Seidelmann, C. (997) Funkwellen für Container – Automatische Identifizierung im kombinierten Verkehr. *ident* **4**

Sickert, K. (1990) Von der kontaktbehafteten zur kontaktlosen Chipkarte. In: Weinerth, H. (ed.), *Schlüsseltechnologie Mikroelektronik – Investitionen in die Zukunft*, Franzis-Verlag, Munich

Sickert, K. (1994) Kontaktlose Identifikation – eine Übersicht. *GME-Fachbericht Nr. 13, Identifikationssysteme und kontaktlose Chipkarte*, vde-verlag, Berlin

Siebel, W. (1983) *KW-Spezial-Frequenzliste*. Siebel Verlag Wachtberg-Pech

Sietmann, R. (2005) Der Biometrie-Pass kommt. Offizielle Vorstellung der Pläne für den ePass. c't 13/2005, Heise Verlag, http://www.heise.de/ct/05/13/044/default.shtml

Siemens (n.d.) *Datenblatt: SOFIS – das sichere Ortungs- und Auto-ID-System für Verkehrsunternehmen*. *Siemens AG, Bereich Verkehrstechnik*, Berlin

Spitz, S. (2007) Secure, Simple and Convenient, NFC Revolutionizes Contactless E-ticketing Technology, *smart! magazine*, Giesecke & Devrient, Munich, http://www.gdaus.com.au/documents/smart_2_2007.pdf

Suckrow, S. (1997) Das Smith-Diagramm. Funkschau-Arbeitsblätter, *Funkschau* **10**, Franzis Verlag, München

Tagmaster (1997) *Datenblatt: Mark Tag™ S1255, multiple access read-only-card*. TagMaster AB, S-Kista

Tanneberger, V. (1995) *Informationsübertragung im Straßenverkehr mit passiven, batterielosen Mikrowellen-Transpondern*. Verlag Shaker, Braunschweig

TEMIC (1997) *Telefunken microelektronic GmbH: Remote Control and Identification Systems, Design Guide*, D-Heilbronn, August 1977

Texas Instruments (1996) *Texas Instruments Deutschland GmbH: Standard Transponder Specifications*. June 1996

Tietze, U. and Schenk, Ch. (1985) *Halbleiter Schaltungstechnik, 7. Auflage*, Springer-Verlag, Berlin

Töppel, M. (1996) Zehn Milliarden Zugriffszyklen – Prozessgesteuerte Identifikationssysteme. In: *elektro AUTOMATION* **4**, Konradin Verlag, Leinfelden-Echterdingen

Ullerich, S. (2001) *Herstellung und Charakterisierung ein- und mehrlagiger flexibler Mikrospulen für medizinische Telemetrieanwendungen*, Rheinisch-Westfälische Technische Hochschule (RWTH) Aachen, http://opac.bib.rwth-aachen.de/

Ullerich, S., Mokwa, G., Bögle, G. vom, Schnakenberg, U. (2000) Micro coils for an advanced system for measuring intraocular pressure. *Technical Digest 1st Annual International IEEE-EMBS Special Topic Conference on Microelectronics in Medicine and Biology*, Lyon, France, 12–14 October 2000, pp 470–474

Ullerich, S., Mokwa, G., Bögle, G. vom and Schnakenberg, U. (2001a) A foldable artificial lens with an integrated transponder system for measuring intraocular pressure. *Technical Digest 11th International Ccongress on Solid-state Sensors and Aactuators TRANSDUCERS '01 and EUROSENSORS XV*, Munich, Germany, 10–14 June 2001, pp 1224–1227

Ullerich, S., Mokwa, G., Bögle, G. vom and Schnakenberg, U. (2001b) Foldable micro coils for a transponder system measuring intraocular pressure. *Procedings of Sensors 2001*, 8–10 May 2001, Nuremberg, Germany, Vol. 1, pp 319–342

Virnich, M. and Posten, K. (1992) *Handbuch der codierten Datenträger*, Verlag TÜV Rheinland GmbH, Cologne

Vivotech (2006) *RF-based contactless payment, White Paper, Version 3.0*, Vivotech, Santa Clara CA, April 2006, http://www.vivotech.com/newsroom/white_paper.asp

Vogt (1990) *Fa. Vogt Elektronik: Bauteile-Handbuch 1990*, Fa. Vogt, Passau

Weisshaupt, B. and Gubler, G. (1992) Identifikations- und Kommunikationssysteme, Datenträger verändern die Automation, *Die Bibliothek der Technik, Band 61*, verlag moderne industrie AG & Co., Landsberg/Lech

Westhues, J. (2005) Hacking the prox card.: Garfinkel, S. and Rosenberg, B. (eds) *RFID Applications, Security, and Privacy*, Addison-Wesley

Wolff, H. (1994) Optimaler Kfz-Diebstahlschutz durch elektronische Wegfahrsperren. *GME-Fachbericht Nr. 13, Identifikationssysteme und kontaktlose Chipkarten*, vde-Verlag, Berlin

Yliuntinen, J. (2007) Role of a neutral trusted service manager in realizing commercial NFC services, *Venyon, NFC World Asia*, September 2007, Singapore

Zechbauer, U. (1999) Mit amorphen Metallen auf der Jagd nach Ladendieben. *Forschung und Innovation* **1**, Siemens AG, Munich, http://www.forschung-innovation.de

Zorzi, M. (1995) Mobile radio slotted ALOHA with capture and diversity, *Wireless Networks*

# Index

A/D converter 311
absorption rate 26, 163
acceleration measurement 315
access authorisation 385
access control 385–8
access protection page 298–300
access register 293
access rights 292
acoustomagnetic security systems 38–9
activation field 234–6
activator 29
active mode, NFC 57–9
active transponders 13, 22–4, 76, 137
address and security logic 286–9
administration code 295
advanced mode 237–8
advanced transponders 236–40
air gap 48
air interface (Part 1) 236–8
Ali Baba 226
ALOHA procedure 199–201, *See also* Slotted ALOHA (S-ALOHA) procedure
amorphous metal 35–6, 38, 110
amplitude modulation 43, 52, 97, 99, 141, 181, 183
amplitude shift keying (ASK) 182–4
anharmonic 39
animal identification 25, 233–40, 391–8
animal identification, standardisation 233–40
  full/half-duplex system 235–6
  ISO/IEC 11784 (Code Structure) 233–4
  ISO/IEC 11785 (Technical Concept) 234
  ISO/IEC 14223 (advanced transponders) 236–40
  sequential system 236
antennas 116–27, *See also* Dipole antennas
  coil 331, 333
  current 64, 81, 84, 219
  dipole antennas 122–4, 177
  effective aperture 119–22
  effective length 122
  EIRP 118
  ERP 118
  gain and directional effect 117–18
  input impedance 118–19
  patch or microstrip antenna 125–7
  radiation resistance 118
  radius 65
  scatter aperture 119–22
  slot antennas 127
  Yagi–Uda antenna 124
anticollision algorithms/procedures 24, 99, 194–211, 222, 327, 381
  ALOHA procedure 199–201
  broadcast 194
  frequency domain multiple access (FDMA) 197
  space division multiple access (SDMA) 196–7
  spread-spectrum 194
  time domain multiple access (TDMA) 197–9
anti-theft systems for goods, standardisation (VDI 4470) 29, 267–70
application code (MAD) 295
application data contained therein (APDU) 226
application directory 295–7
application identifier 273
application layer 273–4

*RFID Handbook: Fundamentals and Applications in Contactless Smart Cards, Radio Frequency Identification and Near-Field Communication, Third Edition.* Klaus Finkenzeller
© 2010 John Wiley & Sons, Ltd

application software 317, 324, 341
artificial interocular lens 418
ASK modulation 142, 245, 288, 326
asymmetrical key procedure 230
attacks on RFID systems 214–26
  attempted attack 226
  deception 215
  denial of service 215
  protection of privacy 215
  on RF interface 216–26, *See also* RF interface, attacks on
  spying out 215
  on transponder 215–16
authentication 24, 27, 226, 228, 292, 400
auto-ID systems 2–6, *See also* Barcode systems; Biometrics
  different ID systems, comparison 7–8
  Homepage 422
automatic fare collection (AFC) 362, 366
automatic identification procedures (Auto-ID) 1
automotive industry 414

backscatter systems 22, 48
  coupling 219–22
  modulated 139–41, 283
  transponder 171
baked enamel 351
bandwidth 162
barcode labels/systems 1–3, 272
  Code 2/5 interleaved 3
  Code 39 3
  Code Codabar 3
  EAN coding 3
baseband, coding in 179–81
basic access control (BAC) 383
battery 137
ending measurement 315
benefits of RFID systems 413
bidirectional serial interface (I/O port) 4
binary search procedure 198, 209–11
  tree algorithm 222, 248
biometrics 4
  fingerprinting procedures (Dactyloscopy) 4
  voice identification 4
Bit 6 207
bit coding 204
block structure 291
blocker tag attacks 223
bolus 394
broadcast 194
busy signal 383

calibration coil tests, smart cards 263–4
CALYPSO 368–72
cancellation in microwave transponders 137–8
capacitance diodes 33
capacitive (electric) coupling 22, 49–50, 241
capacitive modulation 97–8, 242
capture effect 202
car keys 13
carrier circuit 179
carrier oscillation 182
carrier pigeon races, animal identification 395–8
CE mark 172, 429
chaining, single-chip reader IC 328
Channel 166, 195
characteristic wave impedance 112–14
charging capacitor 52
checksum procedure 189–93
  cyclic redundancy check (CRC) procedure 191
  longitudinal redundancy check (LRC) procedure 190–1
  parity checking 189–90
chip 6
cipher/ciphering 229–30
circuit damping 75
circular polarisation 114, 126
clamping device identification 267
clocks 17–18
close-coupling smart cards 241–3
  answer to reset and transmission protocols (Part 4) 241, 243
  applications 362
  dimensions and location of coupling areas (Part 2) 241
  electronic signals and reset procedures (Part 3) 241–2
  physical characteristics (Part 1) 241
  test methods for 263
close coupling systems 21, 48–9
  reader to transponder, data transfer 49–50
  transponder to reader, data transfer 49
  transponder, power supply to 48–9
CNC technology 409
coaxial cable 333
Code 2/5 interleaved 3
Code 39 3

Code Codabar 3
code division multiple access (CDMA) 194
coding 179–88
  in baseband 179–81
  line codes 179
coil-on-chip technology 20–1
coil resistance 72
collar transponder 392
collision interval 202
communication system 179
components of RFID system 6–9
  reader 6, 8
  transponder 6, 8
compression measurement 315
conductor loop 84, 112
conductor loop antenna 85
configuration register 292
connection technique 356–8
contact smart card 303
contacting 356
contactless clock 17
contactless interface unit (CIU) 305
contactless payment systems 372–5
  closed 372
  ExpressPay by American Express® 374
  MasterCard® 374
  open 372
  Visa® Contactless 374–5
contactless smart cards 18–19, 22, 361–2
contactless smart cards, manufacture of 352–9
  coil manufacture 352–6
  cut clamp technology (CCT) 357
  lamination 359
  reflow soldering procedure 357
contactless smart cards, standardisation 240–67
  ISO/IEC 10373 (test methods for smart cards) 263–7, *See also* Smart cards
  ISO/IEC 10374 (container identification) 267
  ISO/IEC 10536 (close-coupling smart cards) 241–3
  ISO/IEC 14443 (proximity-coupling smart cards) 243–58, *See also* Proximity-coupling smart cards
  ISO/IEC 15693 (vicinity-coupling smart cards) 258–63, *See also* Vicinity-coupling smart cards
  ISO/IEC 69873 (data carriers for tools and clamping devices) 267
contactless technology 1
container identification (ISO/IEC 10374) 267, 403–5
control unit, readers 323–4
coprocessor 25
country signing certification authority 382
coupling
  capacitive 22, 49
  electric 22, 49
  inductive 22, 61, 112, 162
  magnetic 22
coupling coefficient ($k$) 89–91
  measuring 100–2
  of RFID magnetic field 68–70
coupling element 9, 241
coupling feature of RFID 21–2
coupling loss 320
cryptographic co-processor 213, 305
cryptological key 227
cryptological procedures 24
cryptological unit 286
crystal lattice 146
current matching 54
cut clamp technology (CCT) 357
cyclic redundancy check (CRC) procedure 189, 191–3, 236, 257, 305

dactyloscopy 4
data block 256
data carrier 7
data encryption standard (DES) 305
data integrity 189–211, *See also* Anticollision; Checksum procedure
data transfer 179
data transmission 94
DBP code 181
deactivation devices, inspection guidelines for customers 270
deactivation rate 270
deactivator 31
deception 215
deciphering 229
decryption, dual interface card 306
demodulation 179, 181, 283, 286
demodulator 179
denial of service 215
derived keys, authentication using 228
detection rate 29, 267
dice 348
die 347
dielectric gap 108

differential bi-phase code 236
differential code 179, 181
differentiation features of RFID 11–28, *See also* Selection criteria for RFID; Transponder(s): construction formats
  backscatter systems 22
  coupling 21–2, *See also* Coupling feature of RFID
  data capacities of transponders 11
  data carrier's operating principle 12
  data quantity 12
  data storage 12
  data transfer from transponder to reader 12
  electronic article surveillance (EAS) 11
  frequency 21–2
  frequency range 12–13
  full-duplex (FDX)/half-duplex (HDX) systems 11
  fundamental 11–13
  operation type 12
  power supply 12–13
  range 21–2
  response frequency 12
  sequence 12
  sequential systems (SEQ) 11
  state machines 12
  surface acoustic wave transponders 22
  transmission frequency 13
  writable transponders 12
digital modulation procedures 180–8
  2 frequency shift keying (2 FSK) 185
  2 phase shift keying (PSK) 185–6
  amplitude modulation 181
  amplitude shift keying (ASK) 182–4
  carrier 181
  duty factor 182
  frequency modulation 181
  load resistance 187
  modulation procedures with subcarrier 187–8
  multilevel modulation 187
  phase modulation 181
  subcarrier frequency 187
digital signature 382
dimples 31
Diode, Schottky 47
dipole antennas 55, 110, 117, 122–4
  2-wire folded dipole 122
  half-wave dipole (λ/2 dipole) 122
  shortening factor 123
direction of maximum radiation 124
directional antenna in radio technology 124
directional beam 26
directional coupler 48, 320
directional coupling 320
directivity 321
director 124
Discovery Services (DS) 275
disk (coin) format 13–14
disk transponder 14
Dopant profile 33
Doppler effect 312–13
driver 325
dual interface card, architecture 25, 303–7
  asymmetric key algorithms 306
  coprocessors 303
  cryptographic algorithms 303
  MIFARE® Plus 304–5
  modern concepts for 305–7
  PMU (power management unit) 304
  security requirements 304
dual port EEPROM 297–300
duty factor 182
dynamic binary search procedure 209–11
dynamic S-ALOHA procedure 203–4

EAN code 3
EAN/UCC-128 274
ear tag 392
EAS 11 29, 173
EAS system 24
Eddy currents 71
  losses 108
EEPROM 414
  lifetime 309
  write time 310
effective aperture, antennas 119–22
effective height 122
effective length, antennas 122
EIRP 118
electric coupling 22
electric field 22, 110
electric rotational field 70
electrical coupling 50–2
  passive transponders, power supply of 50
  transponder to reader, data transfer 50–2
electrical field 50
electrically erasable programmable read-only memory (EEPROMs) 12
electrode 50

electromagnetic backscatter coupling 45–8
free space path loss 46
operating principle 48
transponder to reader, data transfer 47–8
transponder, power supply to 45–7
electromagnetic field 21
electromagnetic interference field 26
electromagnetic procedure 35–8
electromagnetic types, 1-bit transponders 35–8
electromagnetic waves 110–44
characteristic wave impedance 112–14
field strength ($E$) 112–14
free space attenuation 112
generation 110–12
near-field to far-field transition in conductor loops 112
polarisation of 114–16
radiation density ($S$) 112
reflection of 115–16
spherical emitter 112
Electronic Article Surveillance (EAS) systems 11, 24, 168–70, 173
electromagnetic procedure 35
frequency divider procedure 34–5
microwave systems 33–4
RF procedure 29
electronic data carriers, architecture 283–315, *See also* Transponder(s): with memory function
physical variables, measuring 311–15
electronic immobilisation 13, 398–403
authentication 400
functionality of 399–401
motor electronics 400
procedure 399–400
success story 401–2
electronic passport 380–3
anticollision algorithm 381
basic access control (BAC) 383
country signing certification authority 382
design of 380
digital signature 382
fingerprint 381
machine-readable zone (MRZ) 382–3
position of 380
serial number 381
electronic product code (EPC) 275, 277–8
introduction 280–2
embedding technique 352–3
EN 300 220 170–1, 424
EN 300 330 162, 170, 424
EN 300 440 170–1, 424
encryption 27
dual interface card 306
encrypted data transfer 228–32
end-of-burst detector 54
energy range 80, 219, 322
EPC Information Services (EPCIS) 275
EPCglobal Middleware 275
EPCglobal Network 274–82
discovery services (DS) 275
electronic product code (EPC) 275, 277–8, 280–2
EPC information services (EPCIS) 275
EPCglobal Middleware 275
Generation 2 276
GIAI (global individual asset identifier) 279
logistics processes 275
Object Naming Service (ONS) 275
Ratified EOCglobal Standards 277
SGTIN (serialized global trade item number) 278–9
specifications 276–9
standards 276–9
transponder classes 280
equivalent circuit, Schottky diode 130
equivalent radiated power (ERP) 118
ERC recommendation 70–03 166
estimated growth of RFID global market 2
etching 19
etching technique 355–6
Eurobalise 166, 388–90
European Article Numbering Association (EAN) 3, 273
European Licensing Regulations 165–72
CEPT/ERC REC 70–03 166–70
European Telecommunication Standards 165
National Licensing Regulations in Europe 172–5
specific standards 171–2
standardized measuring procedures 170–2
European Radio Office 166
European Radio communications Office (ERO) 166, 172
European Train Control System (ETCS) 388
exchange system 370
*ExxonMobil Speedpass* 375

Fahrsmart 367
false alarm rate, ascertaining 268–9
far field 112, 162
Faraday's Law 70–2
  metal surface 71
  mutual inductance 71
  open conductor loop 71
  self-inductance 71
  vacuum 70
far-field in conductor loops 112
FCC Part 15 175
FCC regulation 175
FDX 11, 39
FDX-B transponder 237
features of RFID 11–28, *See also* Differentiation features of RFID
ferrites 106–8
ferromagnetic metals 38
ferromagnetic random access memory (FRAMs) 12
field
  electric 50
  magnetic 61
field generator coil 264
field strength 112–14
  magnetic 61
  maximum 65
  path of 63
fingerprinting procedures (Dactyloscopy) 4
fitting transponders in metal 108–10
flip chip technology 356
flip-flops 231
floating gate 308
FRAM 309–10
frame 254
frame antenna 31
frame size device integer (FSDI) 255
free space attenuation 112
free space path loss 46
frequency band 166
frequency divider 34–5
frequency domain multiple access (FDMA) 194, 197
frequency feature of RFID 21–2
frequency modulation 181
frequency ranges 156–64
  13.56 MHz (ISM, SRD) frequency range 159
  2.45 GHz (ISM, SRD) frequency range 161
  24.125 GHz frequency range 161
  27.125 MHz (ISM) frequency range 159–60
  5.8 GHz (ISM, SRD) frequency range 161
  6.78 MHz (ISM) frequency range 158–9
  9–135 kHz frequency range 157–8
  inductively coupled RFID systems, frequency selection for 162–4
  International Telecommunication Union (ITU) 164–5
  ISM frequencies 156
  selection 162–4
  short-range devices (SRD), use of 156
  UHF frequency range 160–1
frequency shift keying (FSK) 185
  2 frequency shift keying (2 FSK) 55, 185
full-duplex procedure (FDX) 11, 39, 235–6
  FDX/HDX and SEQ systems, comparison between 53–4
  representation of 40
function cluster 295
functional testing 263

generator coil 31
generator polynomial 191
Germany, licensing regulations 172–5
glass housing 13–15
glass transponders 108, 348–51
glaucoma 417
global ID magazine 421
global individual asset identifier (GIAI) 279
graphite coating 50
ground antenna 405
group antenna 127
GTAG (global tag) initiative 273–4

half-duplex procedure (HDX) 11, 39, 53–4
half-wave dipole (λ/2 dipole) 122
hard magnetic metal 38
hard tag 29, 34
harmonic frequency 39
harmonic 33
HF interface 288, 302
H-field 171
hierarchical key concept 292–3
high-end system 25
high-end transponder 283
host control interface (HCI) 344
human medicine 417
hybrid card 370
hysteresis curve 35, 106

I block 257
ICARE 368
ID-1 format 18–19
Ident 421
identification codes for animals 234
identification of animals using RFID systems, *See* Animal identification, standardisation
identification system 391
IDLE mode 247
ignition lock 399
IIC bus 299
immobilisation system 325
impedance matching 130, 137
impedance sensors 153–4
induced voltage 71
inductance 66–8, 71
inductance law 71
inductive coupling 22, 40–5, 52–5, 218–19, 241
  FDX/HDX and SEQ systems, comparison between 53–4
  power supply to passive transponders 40–5, *See also under* Passive transponders
  transponder to reader, data transmission 54–5
  transponder, power supply to 52–3
inductive modulation 242
inductive radio system 22, 168–70
  Germany, licensing regulations 173
inductively coupled RFID systems 319–20
  frequency selection for 162–4
industrial associations 419–21
  AIM 419–20
industrial automation 25, 409–17
  centralised control 411–12
  decentralised control 412–13
  inductively coupled transponders 409
  industrial production 410–17
  tool identification 409–10
information processing in transponders 24–5
information source 179
injectible transponder 392
injection needles 393
inlet foil 352
input capacitor 129
input impedance 118–19, 139
integrated reader ICs 324–31, *See also* Single-chip reader IC
  driver 325
  load modulation procedure 326
  on-chip oscillator 325
  received signal conditioning 325
  U2270B 327
interdigital transducer 55, 145
interference reflection 148
international container transport 390–1
International Telecommunication Union (ITU) 164–5
internet links 422–3
interrogation field strength ($H_{min}$) 77–83, 139, 243
  energy range of transponder systems 80–2
  interrogation zone of readers 82–3
interrogation pulse 147
interrogation zone 82–3, 127
interrogator-driven procedures 198
ISM frequency ranges 155
ISO/IEC 10374 390–1
ISO/IEC 10536 49, 240
ISO/IEC 11784, identification code 233–4
ISO/IEC 14443 transponder, RF interface for 286
ISO/IEC 6346 267
ISO/IEC 69871 267
ISO/IEC 69872 267
ISO/IEC 69873 267
ISO/IEC 9798–2 227
ISO/IEC container 267
ISO/IEC 18000 Series 270–2, *See also under* Item management, standardisation
isotropic emitter 112, 117
item management, standardisation 270–82
  EPCglobal Network 274–82, *See also individual entry*
  GTAG (global tag) initiative 273–4
  GTAG transport layer (physical layer) 273–4
  ISO/IEC 18000 Series 270–2

jamming, RF interface 217–18
junction capacitance, passive microwave transponders 130
junction resistor, passive microwave transponders 130

key 292
  application specific 294
  application's own 294

key (*continued*)
hierarchical 293
master 228
secret 292
keyring transponder 17

label 19–20
lamination, in contactless smart cards manufacturing 359
langasite 315
lead frame 356
Lenz's law 85
licensing regulations 155–78
line codes 179
linear detection, passive microwave transponders 131
lines of magnetic flux 62
lithium niobate 55, 144
lithium tantalate 55, 144
load modulation 43, 52, 94–100
capacitive load modulation 97–8
demodulation in reader 98
integrated reader ICs 326
modulation resistor 96
ohmic load modulation 95–7
with subcarrier 43–4, 285–6
Q factor influence 98–100
load resistance ($R_L$) 92–3, 187
load resistor 43, 129
logistics processes, EPCglobal Network 275
longitudinal redundancy check (LRC) procedure 190–1
long-range system 22, 45
longwave 157
loop antenna 171
low-barrier Schottky diode 47
low-cost transponder 163
low-end system 24
Lufthansa 361

machine-readable zone (MRZ) 382–3
magnetic alternating field 63
magnetic coupling 22, 49
magnetic field 61–110, *See also* Interrogation field strength ($H_{min}$); Resonance; Total transponder–reader system; Transformed transponder impedance ($Z'_T$)
abbreviations used conductor loops, 62–5
constants used 62
coupling coefficient ($k$) 68–70
Faraday's Law 70–2
inductance (L) 66–7
magnetic field strength (H) 61–6
magnetic flux 66
magnetic flux density 66
mutual inductance (M) 67–8
optimal antenna diameter 65–6
system parameters, measurement 100–6
transponder, practical operation of 76–7
units used 62
magnetic flux 66
magnetic materials 106–10, *See also* Ferrites
fitting transponders in metal 108–10
properties 106–7
magnetisation characteristic 106
magnetostriction 38
main radiation direction 117
Manchester code 181, 205
manipulation 227
market for smart cards 4–6
mass production 410
master key 228
master-slave principle 317–18
mat 405
matching 136
circuit 334
current 54
power 53
voltage 54
material flow 411
measurement
acceleration 312, 315
compression 315
distance 313
flow 312
gases 312
light 312
moisture 312
pH value 312
physical quantities 322
speed 313
temperature 315
medical applications 417–18
artificial intraocular lens 418
glaucoma 417
human medicine 417
microcoil 418
memory architecture, transponder 289–300
read-only transponder 289–91
segmented memory 294–5

transponder with cryptological function 291–3
writable transponder 291
memory block 238
memory capacity 28
memory cards 5
memory technology 307–11
EEPROM 308–9
FRAM–EEPROM, performance comparison 310–11
FRAM 309–10
RAM 307–8
(S)RAM memory 307
metal
amorphous 35, 38
foil 50
hard magnetic 38
lid 108
surface 15, 71, 108, 115–16, 403, 409
metallic surface 107
microchip 9, 72, 347
operating voltage 77
power consumption 92
power supply 72
microcoil 418
microprocessor 6, 300–7
operating system 300
smart card 4–5, 300
microprocessors, architecture 300–7
command processing sequence 302
dual interface card 303–7, *See also individual entry*
microstrip antenna 125–7
microwave frequency 45
microwave range 22
microwave system 320–1
microwave transponders 127–44
active transponders, power supply of 137
cancellation 137–8
equivalent circuits of transponder 127–9
modulated backscatter 139–41
passive microwave transponders, power supply of 129–37, *See also individual entry*
practical operation of 127–44
read range 141–4
reflection 137–8
SAW transponders 322–3
sensitivity of transponder 138–9
microwaves 33–4
MIFARE® application directory 295–7
Miller code 181, 247
mobile telephone 303
modem 179
modified Miller code 181
modulated backscatter 48, 139–41
modulated radar cross-section 115
modulated reflection cross-section, electromagnetic backscatter coupling 47–8
modulation 54, 142, 179–88, 319–20, *See also* Digital modulation procedures
modulation capacitor 97
modulation index 142
modulation product 182
modulation resistor 96, 286
modulator 179
motor electronics 400
MP&PR specification 274
multi-access procedures 194–211, *See also* Anticollision
'Multi-shot' device 393
multilevel modulation 187
multiplexer 383
mutual authentication 227
mutual authorisation 292
mutual inductance 67–8, 71, 85
mutual symmetrical authentication 227–8

National legislative regulations 172
National Licensing Regulations in Europe 172–5, *See also under* European Licensing Regulations
near field 43, 112
near-field communication (NFC) 57–9, 339–46
active mode 57–9
application software 341
applications 375–80
communication protocol 341
data transceiver 340
load modulator 341
middleware 341
NFC wired interface 345–6
passive mode 58
secure NFC 341–6
near-field in conductor loops 112
noise 142
non-linear resistance 33
NRZ code 181, 205, 245

occipital bone 394
OCR reader 3
OCR system 3
OEM reader 338
offered load 199
offline systems, access control 385–7
ohmic load modulation 95–7
on-chip oscillator 325
on-chip trimming capacitor 52
one-port resonator 151
one-time-pad 230
online systems, access control 385
on-off keying 245
open conductor loop 71
operating frequency 13, 26, 84
operating principles 29–59, *See also* 1-Bit transponders; Close-coupling; Electrical coupling; Electromagnetic backscatter coupling; Full-duplex procedure (FDX); Half-duplex procedure (HDX); Sequential procedures (SEQ); Surface acoustic wave (SAW) transponders
operating voltage 77
optimal antenna diameter, RFID magnetic field 65–6
order processing 417
oscillator 142, 319, 325
OSI layer model 256
overlay foil 352

parallel regulator 77
parallel resonant circuit 72, 74
parity bit 189
parity checking 189–90
passive microwave transponders, power supply of 129–37
  impedance matching 130
  junction capacitance 130
  junction resistor 130
  linear detection 131
  peak value rectification 131
  radiation resistance 132
  Schottky detector 130–6
  voltage doublers 132
passive mode, NFC 58–9
passive transponders 13, 22–4, 40–5, 76
password 292
patch antenna 125–7
payment 303
PCD 243, 259
peak value rectification, passive microwave transponders 131
penetration depth 163
permanent magnet 36
permeability 106
phase 102
  modulation 98, 181
  noise 142
  phase shift keying (PSK) 185–6, 242
  position 315
physical principles of RFID 61–154, *See also* Antennas; Electromagnetic waves; Magnetic field; Microwave transponders; Surface waves
Piezo effect 55, 144
Piezoelectric crystal 144
pigeon ring 396
planar antenna 125
plastic housing 13–15
plastic package (PP) 13
plastic transponders, manufacture of 351
polarisation direction 139
polarisation loss 114
polarisation of electromagnetic waves 114–16
polling procedure 198
polyethylene foil 30
polymer thick film pastes (PTF) 354
power consumption 92
power-down mode 305
power level 166
power management unit 304
power matching 53
power on logic 286
power saving mode 305
power supply 13, 99, 129, 241–2, 283
Poynting radiation vector S 113
production process 410
programming station 386
protection by cryptographic measures 226–32
  against attempted attacks 226
  authentication using derived keys 228
  encrypted data transfer 228–32
  mutual symmetrical authentication 227–8
protection of privacy 215
protocol 256–8
protocol control byte (PCB) 257
proximity cards (PICC) 243
proximity-coupling smart cards–ISO/IEC 14443 22, 243–58, 263, 362
  applications 362
  communication interface 245–7

initialisation and anticollision (Part 3) 247–54
physical characteristics (Part 1) 243
radio frequency interference (Part 2) 243–7
transmission protocols (Part 4) 254–8
pseudorandom sequence 231
public transport 362–72
automatic fare collection (AFC) 362
benefits of RFID systems 363–5
CALYPSO, EU Project 368–72
dual interface card 370
*Fahrsmart* project 367–8
fare systems using electronic payment 365
Germany–Lüneburg, Oldenburg 367–8
hybrid card 370
ICARE, EU Project 368–72
Korea–Seoul project 366–7
market potential 366
open financial exchange systems 370
requirements 363
starting point 362–3
pulse-pause coding 181
pulse position modulation (PPM) procedure 259
pulse radar 323
pulsed system 39

Q factor 75
influence 98–100
measuring 102–6
Quartz 144
quick-release taper shaft 267

R block 257
R&TTE Directive 170, 429
R&TTE homepage 172
radar cross-section (RCS) 115–16
RADAR technology 47, 115
radiation density (*S*) 112, 115
radiation pattern 117
radiation resistance 118, 122, 125, 132
Radio Equipment and Systems (RES) 171
radio frequency (RF) procedure 29–33
radio licensing regulations 156–78
radio service 155
radio system 155
rail traffic 166
random number 227, 398
range feature of RFID 21–2, 26–7
Rayleigh wave 144
read range of microwave transponders 141–4
readers 6, 8, 317–46, *See also* Integrated reader ICs; Near-field communication (NFC)
components 317–24
control unit 323–4
data flow in an application 317
designs 338–9
inductive systems, connection of antennas for 331–8
master–slave principle 317–18
RF interface 318–23
read-only transponders 24, 289–91
REC 70–03 166
received power 143
received signal conditioning 325
received signal 179
receiver arm 319
receiver sensitivity 175
receiver 179
reference card 264, 266
reflection characteristics 48
reflection cross-section 47
reflection in microwave transponders 137–8
reflection of electromagnetic waves 115–16
reflective delay lines 148, 150–1
reflective properties 115
reflectors 55–7, 124, 147
regulations 166, 423
relay attacks 224–6
release taper shaft 267
remote coupling system 22
REQB (REQUEST-B) command 251
REQUEST command 198, 203
resistance, nonlinear 33
resonance 72–6
equivalent circuit 35, 73
parallel resonant circuit 74
Q factor 75
resonant frequency 72, 86, 102
resonant sensors 151–3
response pulse, phase position 315
retention bolts 409
retention knob 267
RF innovations 398
RF interface 283–6
for ISO 14443 transponder 286–7
load modulation with subcarrier 285–6
readers 318–23, *See also under* Readers
RF interface, attacks on 216–26
communication interception 217

RF interface, attacks on (*continued*)
extending the read range 218–26, *See also* Relay attacks
jamming 217–18
RF procedure 29
road toll systems 167
road transport and traffic telematics (RTTT) 167–8
robots 338

S block 257
saw on foil 348
scanning pulse 55
scatter aperture, antennas 119–22
Schottky detector 130–6
Schottky diode 47, 130
screen printing 19
screen printing technique 353–5
scutulum 394
security authentication module (SAM) 228
security element 29
security logic 286–300
security of RFID systems 213–32, *See also* Attacks on RFID systems; Protection by cryptographic measures
'RFID Right to Know Act of 2004 (SB 0867)' 214
security requirements 27–8
smart card 304
security system 226
security tag 34
segmented memory 294–5
fixed segmentation 295
free segmentation 295
segmented transponder 294
SELECT command 203
selection criteria for RFID 25–8, 414
according to functionality 25
EEPROM 414
memory capacity 28
operating frequency 26
range 26–7
security requirements 27–8
SRAM 414
technical parameters 25
self-inductance 71
semiconductor circuit 34
semi-passive transponders 22
semitransparent contactless smart card 18
sensitivity of microwave transponders 138–9
sensor coil 31
sensor data 311
sensor effect 149–54
impedance sensors 153–4
reflective delay lines 150–1
resonant sensors 151–3
switched sensors 154
temperature sensor 151–2
Seoul 366–7
sequential ciphering 230–2
sequential procedures (SEQ) 11, 52–7, *See also* Inductive coupling
sequential systems (SEQ) 11, 52
sequential transponder 11
serial number 24, 202, 206, 222, 278, 289, 307, 347, 381, 399
serialized global trade item number (SGTIN) 278–9
series resonant circuit 84
shift register 192
shortening factor 123
short-range devices (SRD) 23, 156, 166, 170, 424
shortwave frequency 217
shunt regulators 77
shunt resistor 77
sidebands 142, 182
sigma modulation 139
signal coding 179
signal decoding 179
signal processing 179
signal representation 179
signal travelling times 312
silver conductive paste 50
single-chip reader IC 327–31
'Single-shot' devices 393
single wire protocol, NFC 343–5
ski lift 383
ski Tickets 383–4
slot 204
slot antennas 127
slotted ALOHA (S-ALOHA) procedure 201–11, 251
binary search algorithm 204–9
capture effect 202
command set for anticollision 203
dynamic binary search procedure 209–11
dynamic S-ALOHA procedure 203–4
REQUEST command 203
SELECT command 203
smart cards 4–6, *See also* Memory cards

advantages 4
disadvantages 5
dual interface smart cards 25
load modulation, measuring 264–6
test methods for, ISO/IEC 10373 263–7
test procedure for 266–7
smart label transponders 19–20
software application 317
sonotrode 353
space division multiple access (SDMA) 196–7
speed of light 110
spherical emitter 112
split-phase encoding 181
sporting events 405–8
spread spectrum 194, 274
spurious emissions 170
spying out 215
square law detection 132
standardisation 233–82, *See also* Animal identification; Anti-theft systems for goods, standardisation (VDI 4470); Item management, standardisation
standardised measuring procedures, in European licensing regulations 170–2
standards and Regulations 423–9
state diagram 289
state machine 12, 24, 283, 289
static random access memory (SRAM) 12, 414
sticky labels 20
stock keeping, animal identification 391–5
bolus 394
collar transponders 392
ear tags 392
injectible transponders 392
injection needles 393
'multi-shot' device 393
scutulum 394
'single-shot' devices 393
stream ciphering, *See* Sequential ciphering
stretching measurement 315
subcarrier frequency 187, 242, 245
subcarrier 43, 187–8, 245
subharmonic procedure 45
subharmonic 35, 39
superposition 138
surface resistance 354
surface acoustic wave (SAW) transponders, microwave system for 22, 55–7, 144, 322–3
surface waves 144–54, *See also* Sensor effect
creation of 144–6
reflection 146–7
SAW transponders, functional diagram 147–9
swept signal 31
switched sensors 154
symmetrical key procedure 229–30
synchronisation 235
system clock 288

T/R 22–04 171
T/R 60–01 171
tag 29
taper shaft 409
technical journals 421–2
telemetry transmitter 170, 311
temperature measurement 312
temperature sensor 151–2, 311
test mode 347
Thomson equation 73
three pass mutual authentication 227
ticketing 25
time domain multiple access (TDMA) 194, 197–9
tool holder 409
tool identification 409–10
total transponder–reader system 84–100, *See also* Load modulation; Transformed transponder impedance ($Z'_T$)
Touch & go 48
traffic telematics 167–8
transaction time 303
transformed impedance 43
transformed transponder impedance ($Z'_T$) 85–94
coupling coefficient ($k$) 89–92
influencing variables of 88
load resistance ($R_L$) 92–3
transponder capacitance ($C_2$) 91
transponder inductance ($L_2$) 93–4
transformer coupling 112
transformer-type coupling 43
transmission channel 179
transmission error 179
transmission frequency 13, 88
transmission medium 179
transmission protocol, ISO 14223 238
transmitter arm 319
transmitter output power 337
transmitter 179
transponder(s) 6, 8–9, 198, *See also* Active transponders; Passive transponders

transponder(s) (*continued*)
access control 387–8
attacks on 215–16
classes, EPCglobal Network 280
construction formats 13–21
with cryptological function, memory architecture 291–3
electromagnetic backscatter coupling
information processing in 24–5
manufacture of 347–59
with memory function 283–300, *See also* Address and security logic; Dual port EEPROM; Memory architecture, transponder; MIFARE® application directory; RF interface
power supply to
read-only transponders 24
resonant frequency, measuring 102–6
transponder inductance ($L_2$) 93–4
transport container 273
transport layer 273
transport systems 388–91
Eurobalise S21 388–90
international container transport 390–1
trimming capacitor, on-chip 52

U2270B 325
UHF frequency range 160–1
UHF frequency range 160–1, 273
UHF range 22
unipolar code 179
unipolar RZ code 181
unique number 24, 307
Universal Code Council (UCC) 273
Universal Product Code (UPC) code 3

vehicle identification 166
vehicle theft 398
vernam cipher 230
VHF range 160
vicinity-coupling smart cards 22, 258–63
voice identification 4, 6
voltage divider, capacitive 50
voltage doubler 132
voltage matching 54

wafer 347
waste disposal 404–5
wavelength 111
winding technique 352
wire-bound carrier systems 157
wired interface, NFC 345–6
writable transponder, memory architecture 291
write time 310

Yagi–Uda antenna 124, 220–1