IN THE UNITED STATES DISTRICT COURT
FOR THE WESTERN DISTRICT OF TEXAS
MIDLAND-ODESSA DIVISION

RESONANT SYSTEMS, INC., d/b/a RevelHMI, Plaintiff, v. APPLE INC., Defendant.	Case No. 7:23-cv-00077-ADA **JURY TRIAL DEMANDED**

PLAINTIFF RESONANT SYSTEMS, INC.'S
RESPONSIVE CLAIM CONSTRUCTION BRIEF

TABLE OF CONTENTS

I. INTRODUCTION 1

II. RESPONSE TO APPLE'S "TECHNOLOGY OVERVIEW" 1

III. DISPUTED CLAIM TERMS 2

A. "control component" terms ('767 claim 1; '337 claim 2; '830 claims 1, 19, 20; '882 claims 1, 10) 2

1. The "control component" of '767 claim 1 is not subject to § 112 ¶ 6, and even if it were, Apple's proposed algorithm should be rejected 5

2. Resonant's proposed structure for '337 claim 2 should be adopted 10

3. Resonant's proposed structure for '830 claims 1, 19, and 20 should be adopted 15

4. Resonant's proposed structure for '882 claims 1 and 10 should be adopted 19

B. Preambles of '337 claim 2 and '830 claim 20 21

C. Typographical error in '830 claim 4 22

D. Typographical error in '882 claim 17 25

E. "the mass" ('882 patent, claims 1, 3-6, 10) 26

F. "the one or more sensors" ('767 patent, claim 1); "the oscillating resonant modules ('882 patent, claim 20) 28

G. "desired outputs" ('767 patent, claim 1; '830 patent, claim 4) 29

IV. CONCLUSION 30

TABLE OF AUTHORITIES

Cases

Apex Inc. v. Raritan Comp., Inc.,
325 F.3d 1364 (Fed. Cir. 2003)..... 12

Budde v. Harley-Davidson, Inc.,
250 F.3d 1369 (Fed. Cir. 2001)..... 30

CBT Flint Partners, LLC v. Return Path, Inc.,
654 F.3d 1353 (Fed. Cir. 2011)..... 6

Dyfan, LLC v. Target Corp.,
28 F.4th 1360 (Fed. Cir. 2022) 12, 29

Grp. One, Ltd. v. Hallmark Cards, Inc.,
407 F.3d 1297 (Fed. Cir. 2005)..... 6

HTC Corp. v. IPCom GmbH & Co., KG,
667 F.3d 1270 (Fed. Cir. 2012)..... 18, 30

Intel Corp. v. Qualcomm Inc.,
21 F.4th 801 (Fed. Cir. 2021) 14

JVW Enters., Inc. v. Interact Accessories,
424 F.3d 1324 (Fed. Cir. 2005)..... 3

Micro Chem., Inc. v. Great Plains Chem. Co.,
194 F.3d 1250 (Fed. Cir. 1999)..... 16, 21, 24, 28

Microprocessor Enhancement Corp. v. Texas Instruments Inc.,
520 F.3d 1367 (Fed. Cir. 2008)..... 8

Nanology Alpha LLC v. WITec Wissenschaftliche Instrumente und Technologie GmbH,
No. 6:16-CV-00445-RWS, 2017 WL 5905272 (E.D. Tex. Nov. 30, 2017)..... 13

Northrop Grumman Corp. v. Intel Corp.,
325 F.3d 1346 (Fed. Cir. 2003)..... 21, 24, 28

Novo Indus., L.P. v. Micro Molds Corp.,
350 F.3d 1348 (Fed. Cir. 2003)..... 6

Ollnova Techs. Ltd. v. ecobee Techs., ULC d/b/a ecobee,
No. 2:22-CV-00072-JRG, Dkt. No. 105 (E.D. Tex. Apr. 10, 2023)..... 6, 8

Pavo Sols. LLC v. Kingston Tech. Co.,
35 F.4th 1367 (Fed. Cir. 2022) 6

SanDisk Corp. v. Memorex Prods.,
415 F.3d 1278 (Fed. Cir. 2015)..... 14

Solas OLED Ltd. v. Samsung Elecs. Co.,
No. 2:21-CV-00105-JRG, 2022 WL 36222 (E.D. Tex. Jan. 4, 2022) 9

Thorner v. Sony Comp. Ent. Am. LLC,
669 F.3d 1362 (Fed. Cir. 2012)..... 3

Ultimax Cement Mfg. Corp. v. CTS Cement Mfg. Corp.,
587 F.3d 1339 (Fed. Cir. 2009)..... 6

Univ. of Pitt. of Commonwealth Sys. of Higher Educ. v. Varian Med. Sys., Inc.,
561 F. App'x 934 (Fed. Cir. 2014) 20, 24, 28

Statutes

35 U.S.C. § 112 ¶ 6 ..... passim

I. INTRODUCTION

While Defendant Apple asserts that only "[f]our disputes regarding claim construction remain" (Dkt. 75 at 1), its scattershot opening brief shows that Apple raises more than a dozen sweeping arguments that are inconsistent with the intrinsic record and violate basic tenets of claim construction. In stark contrast, Plaintiff Resonant offers constructions that are consistent with the intrinsic evidence, the understanding of a POSITA, and applicable law.

Apple first seeks to construe several claims reciting "control component" terms. While the parties have several disputes on these terms, the primary issue is that Apple has taken a fundamentally wrong approach to defining algorithms corresponding to claimed functions, where such algorithms are even necessary. Apple believes it is proper to include within such an algorithm steps that are completely unnecessary for and entirely unrelated to performing the claimed function. Resonant told Apple during the meet-and-confer process that this was improper and, contrary to Apple's false statement in its brief, even gave Apple specific examples—which Apple did not dispute—of how its algorithm definitions were clearly overbroad. But Apple plowed forward with its algorithm definitions even though they violate the fundamental principle that corresponding structure under 35 U.S.C. § 112 ¶ 6 is only the structure that is ***necessary*** for performing the claimed function, and nothing more.

Nearly all of Apple's remaining arguments are indefiniteness positions that defy logic, ignore clear intrinsic evidence, and disregard how a POSITA would understand the claims. As detailed below and in the declaration of Resonant's claim construction expert, Dr. Keith Goossen (Ex. A, "Goossen Decl."), Apple's proposals should be rejected and Resonant's should be adopted.

II. RESPONSE TO APPLE'S "TECHNOLOGY OVERVIEW"

Apple's "Technology Overview" mischaracterizes the patented technologies as only being applicable to personal vibrators. Dkt. 75 at 2-3. Apple knows full well that is not the case. It is not

relevant to anything in this case—much less claim construction—that Resonant first attempted to commercialize its vibration motor technology in the area of personal vibrators. Like many patented technologies, Resonant's claimed inventions have applicability to multiple fields, as illustrated by the variety of third-party patents that cite Resonant's patents. *See, e.g.*, Ex. C ("Cited By" section for '337 patent showing that the '337 patent has been cited by patents for gaming controllers (by Facebook/Meta), digital photography, industrial actuators, and electric toothbrushes, among others). Apple's irrelevant distractions should be disregarded.[1]

The asserted patents generally relate to producing vibrations and are not limited in their field of application as Apple suggests. As Resonant's expert, Dr. Goossen, and the specifications of the asserted patents explain, the inventors of the asserted patents "recognized problems with existing systems for producing vibrations and sought to address such problems with the claimed inventions." Goossen Decl. ¶ 22 (citing '830 patent at 2:15-3:25).

III. DISPUTED CLAIM TERMS

A. "control component" terms ('767 claim 1; '337 claim 2; '830 claims 1, 19, 20; '882 claims 1, 10)

While there are additional disputes regarding the "control component" terms, the primary issue for the Court to be aware of is that Apple's approach to defining algorithmic structure under *WMS Gaming* is fundamentally flawed. Apple's proposed algorithms include extraneous steps that are not necessary for performing the claimed function and therefore must be excluded.

The law is very clear that unnecessary steps must be omitted from algorithmic corresponding structure under § 112 ¶ 6. *See, e.g.*, *Univ. of Pitt. of Commonwealth Sys. of Higher*

[1] Apple's expert declaration does not include these irrelevant mischaracterizations of the claimed inventions. Nor does Apple's expert opine that the level of ordinary skill has anything to do with personal vibrators. Dkt. 75-6 ¶¶ 34-36; Goossen Decl. ¶¶ 24-26 (addressing level of ordinary skill).

Educ. v. Varian Med. Sys., Inc., 561 F. App'x 934, 941 (Fed. Cir. 2014) (hereinafter "*Varian*") ("The district court properly located the disclosure of an algorithm that covered what was ***necessary*** to perform the claimed function … and ***nothing more*** …. The algorithm need only include what is ***necessary*** to perform the claimed function.")[2]; *Northrop Grumman Corp. v. Intel Corp*., 325 F.3d 1346, 1352 (Fed. Cir. 2003) ("A court may not import into the claim features that are ***unnecessary*** to perform the claimed function. Features that do not perform the recited function do not constitute corresponding structure and ***thus do not serve as claim limitations***."); *Micro Chem., Inc. v. Great Plains Chem. Co*., 194 F.3d 1250, 1258 (Fed. Cir. 1999) (Section 112, ¶ 6 does not "permit incorporation of structure from the written description beyond that ***necessary*** to perform the claimed function"). Apple's inclusion of unnecessary steps in its algorithms confirms that its proposals should be rejected while Resonant's should be adopted.

During the meet-and-confer process, Resonant asked Apple whether its proposed algorithm constructions were intended to require, for infringement and invalidity, a mapping of every single word and every single step appearing in the numerous specification columns and figures listed in its proposals. Davis Decl. ¶ 2. Apple responded that this was, in fact, its position. In multiple conversations, Resonant's counsel explained the problem with Apple's view, given that the lengthy disclosures that Apple used to define its algorithms also contain extraneous steps that are not even arguably necessary to performing the claimed functions. *Id.* At one point, Apple asked for Resonant to identify such an extraneous step. *Id.* In its brief, Apple states that "Resonant could not identify any portion of the algorithm that was not required for performing the claimed function during the meet-and-confer process." Dkt. 75 at 17. That is false. Davis Decl. ¶ 2. What actually happened is that Apple asked Resonant's counsel to identify an extraneous step in its proposed

[2] All emphasis in quoted material has been added unless otherwise noted.

algorithms and Resonant did so. *Id.* Specifically, Resonant gave the example of the "power down" steps shown in Figure 7A (excerpted below), which (along with their corresponding specification text) are included in Apple's algorithms for the '767, '337, and '830 patents—and yet have nothing to do with performing the claimed functions.

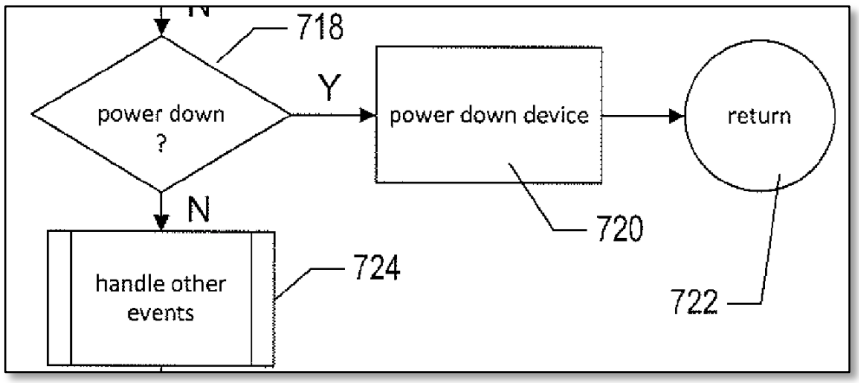

Id.; '767 patent at Fig. 7A. Resonant's counsel explained at length how this example demonstrates why Apple's view of § 112 ¶ 6 is wrong, because Apple seeks to violate long-standing precedent that algorithms under § 112 ¶ 6 must only include what is ***necessary*** to perform the claimed function. Davis Decl. ¶ 2. Apple's counsel did not dispute Resonant's assertion that the "power down" steps are extraneous and unnecessary to perform the claimed functions. *Id.*[3]

Apple refused to modify its proposed algorithms despite their obvious inclusion of extraneous steps and despite Resonant proving—without Apple disputing—that to be the case during a meet-and-confer. This is what prompted Resonant to reformulate its proposed algorithms to recite affirmative steps, rather than to simply reference portions of the specification containing

[3] In addition to Apple's erroneous statement described in this paragraph, Apple's footnote 5 also wrongly states that "[e]arlier during the meet-and-confer process Resonant agreed with Apple as to the algorithm," citing Exhibit 2 to Apple's brief (Dkt. 75-3) as support for this statement. Dkt. 75 at 18 n.5. That document shows Apple is wrong. While the specification figures and text identified by Apple in its proposals generally ***include*** the appropriate algorithm disclosure, Apple's proposals also include extraneous disclosures as discussed herein. *See* Dkt. 75-3 at 5, 6, 7 (Resonant's proposals phrased as "**an** algorithm shown **and/or** described …").

these steps (but also containing extraneous steps). The parties' meet-and-confers made clear that Apple intends to improperly limit the scope of each independent claim. Under Apple's view, for example, the "control component" limitation of '337 claim 2 could only be met by mapping every word appearing in nearly three columns of disclosure and three large flow charts (i.e., 6:43-8:30, 13:3-41, Fig. 7A, Fig. 7B, Fig. 7C), including the "power down" steps and other extraneous steps unrelated to the claimed function. Apple's erroneous view of § 112 ¶ 6 should be rejected.

1. The "control component" of '767 claim 1 is not subject to § 112 ¶ 6, and even if it were, Apple's proposed algorithm should be rejected

a) § 112 ¶ 6 does not apply because claim 1 recites sufficiently definite structure

While Resonant does not dispute that the "control component" terms of the other asserted patents are subject to means-plus-function treatment,[4] there is good reason to treat the "control component" of '767 claim 1 differently. Unlike the others, '767 claim 1 defines its recited control component in structural terms, specifying that it "includes a **microprocessor** … a **control program, stored in** one of a separated electronic **memory** or within the processor, … and a **switch**." '767 patent at cl. 1. As the Federal Circuit has explained, "§ 112 ¶ 6 is inapplicable" where a claim "recite[s] both a function and the structure for performing that function in the claim." *Dyfan, LLC v. Target Corp.*, 28 F.4th 1360, 1365 (Fed. Cir. 2022) (also noting that "we presume that a claim limitation is not drafted in means-plus-function format in the absence of the term 'means'"). Claim 1 of the '767 patent does just this, reciting both a function and the structure for performing that function. Thus, § 112 ¶ 6 simply does not apply. *Id.*

[4] Apple appears to assert that all four asserted patents are post-AIA patents and, thus, subject to 35 U.S.C. § 112(f) rather than 35 U.S.C. § 112 ¶ 6. *See* Dkt. 75 at 6 n.3. But three of the four asserted patents indisputably have effective filing dates that pre-date March 16, 2013. The exception is the '882 patent, which has a post-2013 effective filing date. In any event, the arguments herein are not impacted regardless of which version of § 112 applies.

Apple does not and cannot dispute that "microprocessor," "control program stored in … memory," and "switch" are structural terms. "In cases where it is clear that a claim term itself connotes some structure to a person of ordinary skill in the art, the presumption that § 112, ¶ 6 does not apply is determinative in the absence of more compelling evidence of the understanding of one of ordinary skill in the art." *Id.* at 1366 (internal quotation marks omitted). There is no compelling evidence to the contrary because a POSITA would undeniably consider these to be structural terms. Goossen Decl. ¶ 28.

The core of Apple's argument is that structural terms like "microprocessor" and "control program … stored in memory" are not sufficiently definite structure, such that § 112 ¶ 6 applies and, furthermore, the claim must be limited to a disclosed algorithm for performing the claimed function under *WMS Gaming* and similar case law. Dkt. 75 at 9-11. That is incorrect because the claim itself provides all the necessary structure for performing the function. For example, even taking as true Apple's premise that the claim does not provide sufficiently definite structure unless an algorithm for the microprocessor is provided, the claim language provides such detail by specifying that the control component "receiv[es] output signals from sensors … [and] adjust[s] one or more operational control outputs of the control component according to the received output signals from the sensors," and further explains that the result of this process is that "subsequent operation of linear resonant vibration module produces desired outputs from the one or more sensors corresponding to one or more operational control parameters." '767 patent at cl. 1. This is sufficiently definite structure without resort to the specification, such that § 112 ¶ 6 does not apply. *See* Goossen Decl. ¶ 28.

b) If § 112 ¶ 6 does apply, Resonant's proposed corresponding structure should be adopted

If, however, the Court agrees with Apple that § 112 ¶ 6 applies, the Court must then

determine the function and corresponding structure for this limitation and, more specifically for '767 claim 1, what algorithm is necessary for performing the claimed function. In an effort to narrow issues for the Court, Resonant agreed not to dispute Apple's identification of the claimed function, enabling the Court to focus on the parties' dispute over corresponding structure.

Here is the first place we see Apple's fundamentally wrong approach to defining algorithmic structure, as discussed at the top of Section III.A. Apple asserts that every single word and image contained in two columns of specification text (6:15-8:3) and three figures (Figs. 7A, 7B, 7C) are ***necessary*** to performing the claimed function. That is plainly not true. As one example (and the same example Resonant provided to Apple before briefing), Figure 7A and corresponding specification text disclose "power down" steps described as follows: "when the event is a power-down event, as determined in step 718, resulting from deactivation of a power button by the user, then the control program appropriately powers down the device, in step 720, and the control program terminates in step 722." '767 patent at 6:62-66. This is obviously ***not necessary*** to performing the claimed function, a fact which Apple did not dispute during the meet-and-confer process. Goossen Decl. ¶ 30; Davis Decl. ¶ 2. As another example, Apple's algorithm seeks to require a step of a user powering on the device via a power button or other user control, even though this also is ***not necessary*** to performing the claimed function. '767 patent at 6:19-21 ("The program begins execution, in step 702 [shown in Fig. 7A], upon a power-on event invoked by a user through a power button or other user control.); Goossen Decl. ¶ 30. And as yet another example, Apple's algorithm seeks to require a "non-default mode" for handling "more complex operational modes," even though this also is ***not necessary*** to performing the claimed function. '767 patent at 7:7-22 ("Other, more complex operational modes may be handled by various more complex routines, represented by step 734 in FIG. 7B."); Goossen Decl. ¶ 30.

These examples help illustrate why Apple's view of § 112 ¶ 6 is fundamentally flawed. Any algorithm adopted by the Court must only include that which is "***necessary*** to perform the claimed function … and ***nothing more***." *Varian* at 941; *see Northrop Grumman*, 325 F.3d at 1352; *Micro Chem*., 194 F.3d at 1258.

Resonant's proposed algorithm complies with this long-standing precedent, providing three steps that come from the intrinsic evidence and can be understood and applied by the jury.[5] Goossen Decl. ¶ 29. **Step (a)** is "receive the value of an output signal." *See, e.g.*, '767 patent at 6:7-10 (with reference to Fig. 6: "The CPU receives input 630 from one or more electromechanical sensors 632 that generate a signal corresponding to the strength of vibration currently being produced by the linearly oscillating mass 634."); *id.* at 7:4-7 (with reference to Fig. 7B, describing storing value of output from sensor that is an input to the processor). **Step (b)** is "compare that value to a different value, which could be a previous value," which the claimed invention does by using feedback. *See, e.g.*, *id.* at 7:9-14 (with reference to Fig. 7B: "In the default mode, the LRVM uses continuous feedback control to optimize the vibrational force produced by the LRVM by continuously seeking to operate the LRVM at a frequency as close as possible to the resonant frequency for the LRVM."). **Step (c)** is "adjust one or more operational control outputs based on that comparison." *See, e.g.*, *id.* at 7:22-29 (with reference to Fig. 7B: "In the case that the operational mode is the default mode, in which the control program seeks to optimize the vibrational force generated by the device, in step 736, the routine 'monitor' determines whether the local variable inc is set to TRUE. If so, then the control program is currently increasing the frequency at which the device operates in order to obtain the resonance frequency.").

[5] Any articulation of corresponding structure under that is adopted by the Court, for any asserted patent, must also include "and equivalents thereof." 35 U.S.C. § 112 ¶ 6; 35 U.S.C. § 112(f).

Those are the only steps that are necessary to perform the claimed function. The claimed function does not necessitate a user pressing a button to power on the system, nor does it require any power-down event or any complex operational mode. Apple's proposed algorithm seeks to require all of these extraneous steps and more, but they are simply not necessary to perform the claimed function and thus must be excluded.

Not only is Resonant's formulation sufficient to perform the claimed function, but also it is far more understandable to a jury than Apple's formulation. In addition to containing numerous extraneous steps that cannot limit the claim, Apple's framing would force the jury to compare multiple columns of specification text and multiple detailed figures to any accused product or prior art reference. This would not be practical even if Apple's algorithm did not include numerous extraneous steps. For example, Apple's algorithm for '767 claim 1 would require—just for the control component limitations—a mapping of everything in Figure 7A, everything in Figure 7B, everything in Figure 7C, and all ***1139 words*** contained in 6:15-8:3 of the specification. Apple should not be permitted to lard up the claims with extraneous limitations that not only violate Federal Circuit precedent but also would confuse the jury and require excessive amounts of trial time for the parties to address infringement and prior art mappings.

Notably, Apple's brief does not identify any way in which Resonant's proposed algorithm would be insufficient for performing the function of '767 claim 1. Instead, Apple relies on generic criticisms directed to the algorithms for all four asserted patents and cites *WMS Gaming* as supposedly supporting its proposals. *E.g.*, Dkt. 75 at 19. It does not. In that case, the Federal Circuit articulated a specific list of affirmative steps comprising the algorithm (like Resonant's proposals)—not just a citation to numerous figures and thousands of words of specification text that supposedly must all be mapped for a single § 112 ¶ 6 limitation (like Apple's proposals).

WMS Gaming Inc. v. Int'l Game Tech., 184 F.3d 1339, 1349 (Fed. Cir. 1999) ("[T]he disclosed structure is a microprocessor programmed to assign a plurality of single numbers to stop positions such that: 1) the number of single numbers exceeds the number of stop positions; 2) each single number is assigned to only one stop position; 3) each stop position is assigned at least one single number; and 4) at least one stop position is assigned more than one single number.").[6] To be clear, Resonant is not arguing that a § 112 ¶ 6 algorithm can only be articulated with a small list of affirmative steps and no reference to a specification excerpt or figure. But the law is clear that, however the Court articulates the algorithm, it cannot include extraneous steps that are not necessary for performing the claimed function—and Apple's proposals plainly do.

2. Resonant's proposed structure for '337 claim 2 should be adopted

As with the '767 patent, Resonant's proposed algorithm for '337 claim 2 includes the necessary steps for performing the claimed function and nothing more. Apple's proposed algorithm includes unnecessary steps and should therefore be rejected. Goossen Decl. ¶¶ 32-37.

There are three disputes between the parties on this term. The **first dispute** is which party's algorithm should be adopted. Resonant's proposed algorithm provides a set of steps that come from the intrinsic evidence and can be understood and applied by the jury. Goossen Decl. ¶¶ 33-34. **Step (a)** is "set the mode and strength to values representing selections made by user input to the user input features." *See, e.g.*, '337 patent at 8:11-15 (with reference to Fig. 7C: "This routine is invoked when a change in the user controls has occurred. In step 760, the variables mode and

[6] Apple also cites a *Peloton* case from the District of Delaware as supposedly instructive, but it is inapposite given the facts here. *See* Dkt. 75 at 19 (citing *Peloton Interactive, Inc. v. Icon Health & Fitness, Inc.*, No. CV 20-662-RGA, 2021 WL 4133702 (D. Del. Sept. 10, 2021)). Resonant is not seeking to "amend the actual disclosure from the specification" as Apple asserts. *Id.* at 20. All of Resonant's proposed algorithms are consistent with the intrinsic evidence for the reasons detailed herein—they just omit extraneous steps that Apple's proposals include.

strength are set to the currently selected mode and vibrational strength, represented by the current states of control features in the user interface."); *id.* at 6:21-24 (with reference to Fig. 6: "As one example, the user controls may include[] a dial to select a strength of vibration, which corresponds to the current applied to the coil, a switch to select one of various different operational modes, and a power button."). **Step (b)** is "provide a corresponding output to the power supply so that the power supply provides a corresponding output to the driving component." *See, e.g.*, *id.* at 8:16-20 (with reference to Fig. 7C: "Next, in step 762, the routine 'control' computes an output value p corresponding to the currently selected strength, stored in the variable strength, and outputs the value p to the power supply so that the power supply outputs an appropriate current to the coil."). **Step (c)** is "drive simultaneous oscillation of the moveable component at two or more frequencies." *See, e.g.*, *id.* at 7:43-48 ("Other, more complex operational modes may be handled by various more complex routines, represented by step 734 in FIG. 7B. More complex vibrational modes may systematically and/or periodically alter the frequency or produce various complex, multi-component vibrational modes useful in certain applications, appliances, devices, and systems."); *id.* at 13:10-13 (with reference to Figs. 22A-23: "As one example, a microprocessor-controlled or microcontroller-controlled linear vibration module can be programmed to drive the device simultaneously at two different frequencies.").

In contrast, Apple's proposed algorithm includes extraneous steps. For example, it includes the same power-down and power-on steps described above with respect to the '767 patent, which are plainly not necessary for performing the claimed function of '337 claim 2. *See, e.g.*, *id.* at 6:48-50, 7:24-28 (encompassed within Apple's citations); *supra* Section III.A.1.b; Goossen Decl. ¶ 34. In addition, Apple's proposal seeks to include the entirety of the "monitor" routine shown in Figure 7B (as well as its corresponding specification text), even though Apple itself links the non-default

mode (item 734 in Figure 7B) to the claimed complex vibration modes—rather than everything shown in Figure 7B and described in its corresponding specification text. *See* Dkt. 75 at 16-17; Goossen Decl. ¶ 34. Indeed, Apple's proposed algorithm for '337 claim 2 seeks to require—just for the control component limitation—a mapping of everything in Figure 7A, everything in Figure 7B, everything in Figure 7C, and all ***1471 words*** contained in 6:43-8:30 and 13:3-41 of the specification. That would not assist the jury in deciding infringement and validity issues, even if it did not contain extraneous steps that must be excluded under Federal Circuit law (which it plainly does).

Apple's inclusion of specification excerpt 13:3-41 is a good illustration of why Apple's proposal would be incomprehensible to a jury and should be rejected. That portion of the specification discloses:

> Returning to microprocessor-controlled or microcontroller-controlled linear vibration modules, it should be noted that processor or microprocessor control allows for an essentially limitless number of different vibrational behaviors and modes to be configured by software or firmware design, by user input, or by a combination of software or firmware design and user input. Rather simple enhancements can produce interesting enhanced vibrational behavior. As one example, a microprocessor-controlled or microcontroller-controlled linear vibration module can be programmed to drive the device simultaneously at two different frequencies. FIGS. 22A-23 illustrate interesting vibrational modes produced by driving a linear-resonant vibration module simultaneously at two different frequencies. FIG. 22A shows a vibration mode of a linear vibration module driven at a frequency of 25 Hz. In a one-second duration of time, plotted with respect to horizontal axis 2202, 25 cycles, each including a positive and negative amplitude peak, such as positive amplitude peak 2204 and negative amplitude peak 2206, occur. At a constant 25 Hz frequency of operation, the positive peaks and negative peaks are evenly spaced. FIG. 22B illustrates a vibration mode of the linear vibration module driven at a primary operational frequency of 25 Hz with an added modulating 1 Hz operational frequency. Driving the linear vibration module by both a primary and a modulating frequency produces low-frequency pulses of high-frequency vibration. FIG. 23 illustrates a different complex vibrational mode in which two driving frequencies combine to produce a lower-frequency beat-wave form. The vibrational mode illustrated in FIG. 23 is produced by a primary driving frequency of 25 Hz, as in FIG. 22A, with a second driving frequency of 20 Hz. By varying the number, relative amplitudes, and

> frequencies of two or more driving signals, a microprocessor-controlled or microcontroller-controlled linear-resonance vibration module can be controlled to produce any number of complex vibrational patterns and modes, including periodic modes, modes with multiple different periods, various modulated vibration modes, and even fully a periodic vibration modes that do not repeat time.

'337 patent at 13:3-41. The portions above in red generally discuss how different vibrational behaviors can be achieved (Goossen Decl. ¶ 35), but a jury with Apple's proposed construction may think that this claim limitation can only be met if all of these general descriptions are met by the accused product or prior art reference (e.g., that an accused product must vary the number, amplitudes, and frequencies of multiple driving signals to produce "periodic modes, modes with multiple different periods, various modulated vibration modes, and even fully a periodic vibration modes that do not repeat time"). That would be absurd under the law of § 112 ¶ 6 because that is not necessary to perform the claimed function, but Apple says that its proposed algorithm is intended to be limited by every word included within its multi-column and multi-figure citations. Similarly, the portions above in green describe specific examples with particular frequency values, which are not necessary to perform the claimed function. Goossen Decl. ¶ 35. A jury with Apple's proposed construction may think that this claim limitation can only be met if the accused product or prior art reference uses these exact frequency values. Again, that would be absurd under the law of § 112 ¶ 6, but that is what Apple says is intended by its proposed algorithm.

The parties' **second dispute** is whether the corresponding structure for the '337 control component must include "the switches shown in Figures 5A–6 and described at 5:45–65, 6:2–8" as Apple proposes. A switch is not a necessary part of the claimed control component, much less multiple switches as Apple's proposed construction seems to imply with the use of the plural term

"switches."[7] Goossen Decl. ¶ 36. Notably, Apple's proposal for the '882 control component does not include switches as part of the claimed control component, so Apple appears to agree with Resonant on this point at least as to the '882 patent. The control component of claim 2 controls supply of power, and it can perform this function without a switch (e.g., by using computer logic to determine appropriate control signals). Goossen Decl. ¶ 36. Whether a switch is or can be used elsewhere in a system that includes the control component is immaterial. In addition, even if the Court were to find that a switch is required, Apple's identification of portions of the specification again includes extraneous material that Apple improperly seeks to add as limitations to the claimed control component (e.g., "electromechanical buttons") and introduces confusion by referring to user interface "switches" in addition to "the H-bridge switch." *See, e.g.*, '337 patent at 6:2-8. If adopted, Apple's proposed inclusion of a switch as part of the claimed control component would not even make clear to the jury whether multiple switches are required and whether it (or each) is supposed to be a user interface switch, an H-bridge switch, or a switch within an H-bridge. This again illustrates that Apple's articulations of proposed corresponding structure are insufficiently precise and should be rejected.

The parties' **third dispute** is whether an algorithm is required if the corresponding structure is a microcontroller. The parties agree that the specification discloses a microcontroller as corresponding structure, but Apple wrongly asserts that it should be treated just like the disclosed processor, CPU, and microprocessor, for purposes of § 112 ¶ 6. This is despite the fact that Dr. Visell acknowledges that a microcontroller is different from a microprocessor. *E.g.*, Dkt. 75-6 ¶ 83 (microcontroller "differs, somewhat, from a general purpose computer"). The

[7] The specification refers to an "H-bridge switch" and, as Dr. Goossen explains, "one H-bridge includes multiple switches." Goossen Decl. ¶ 36. Thus, it is unclear whether Apple is suggesting that multiple H-bridges are necessary or just one H-bridge comprising multiple switches.

microcontroller disclosed is not a general-purpose computer but instead provides more specific functionality sufficient to perform the claimed function without additional special programming. Goossen Decl. ¶ 37. Thus, there is no need to identify an algorithm for the microcontroller to perform. *HTC Corp. v. IPCom GmbH & Co., KG*, 667 F.3d 1270, 1279-80 (Fed. Cir. 2012).

3. Resonant's proposed structure for '830 claims 1, 19, and 20 should be adopted

As with the '767 and '337 patents, Resonant's proposed algorithms for '830 claims 1, 19, and 20 include the necessary steps for performing the claimed function and nothing more. Apple's proposed algorithm includes unnecessary steps and should therefore be rejected. Goossen Decl. ¶¶ 38-44.

There are four disputes between the parties on this term. The **first dispute** is which party's algorithms should be adopted. Resonant proposes one algorithm for claims 1 and 19 comprising steps (a) and (b), with an additional step (c) included in the algorithm for claim 20.[8] These proposed algorithms provide steps that come from the intrinsic evidence and can be understood and applied by the jury. Goossen Decl. ¶¶ 39-40. **Step (a)** is "set the mode and strength to default values or values representing selections made by user input to the user input features." *See, e.g.*, '830 patent at 6:60-61 (with reference to Fig. 7A, describing setting of local variables to default values, such as frequency variable "freq"); *id.* at 8:9-18 (with reference to Fig. 7B, describing increasing or decreasing "the value stored in the variable freq" to obtain resonant frequency as part of the "monitor" routine); *id.* at 8:21-26 (with reference to Fig. 7C: "This routine is invoked when a

[8] In its opening brief, Apple finally acknowledges that the algorithm needed for claim 20 is not exactly the same as the algorithm needed for claims 1 and 19. *See* Dkt. 75 at 13 (including 13:20-59 in its proposed algorithm for claim 20 but not for claims 1 and 19). Prior to this change, Apple had identified a single algorithm that would require all steps disclosed in 13:20-59 for claims 1 and 19 as well. *E.g.*, Ex. D at 5. While it is helpful Apple now at least recognizes that problem with its prior proposals, all of Apple's proposed algorithms still include extraneous steps.

change in the user controls has occurred. In step 760, the variables mode and strength are set to the currently selected mode and vibrational strength, represented by the current states of control features in the user interface."); *id.* at 6:21-24 (with reference to Fig. 6: "As one example, the user controls may include[] a dial to select a strength of vibration, which corresponds to the current applied to the coil, a switch to select one of various different operational modes, and a power button."). **Step (b)** is "provide a corresponding output to the power supply so that the power supply provides a corresponding output to the driving component." *See, e.g.*, *id.* at 7:60-67 (with reference to Fig. 7B: "In the case that the operational mode is the default mode, in which the control program seeks to optimize the vibrational force generated by the device, in step 736, the routine 'monitor' determines whether the local variable inc is set to TRUE. If so, then the control program is currently increasing the frequency at which the device operates in order to obtain the resonance frequency."); *id.* at 8:26-30 (with reference to Fig. 7C: "Next, in step 762, the routine 'control' computes an output value p corresponding to the currently selected strength, stored in the variable strength, and outputs the value p to the power supply so that the power supply outputs an appropriate current to the coil.").

That is all that is required for the control component of '830 claims 1 and 19. Goossen Decl. ¶ 39. For '830 claim 20, the algorithm requires an additional step (c) that also comes from the intrinsic evidence. **Step (c)** is "drive simultaneous oscillation of the moveable component at two or more frequencies." *See, e.g.*, *id.* at 7:53-58 ("Other, more complex operational modes may be handled by various more complex routines, represented by step 734 in FIG. 7B. More complex vibrational modes may systematically and/or periodically alter the frequency or produce various complex, multi-component vibrational modes useful in certain applications, appliances, devices, and systems."); *id.* at 13:27-31 (with reference to Figs. 22A-23: "As one example, a

microprocessor-controlled or microcontroller-controlled linear vibration module can be programmed to drive the device simultaneously at two different frequencies."). Goossen Decl. ¶ 40.

In contrast, Apple's proposed algorithms for the '830 patent include extraneous steps. Goossen Decl. ¶ 41. For example, Apple's algorithms include the same power-down and power-on steps described above with respect to the '767 patent, which are plainly not necessary for performing the claimed function of '830 claims 1, 10, and 20. *See, e.g.*, '830 patent at 6:58-60, 7:34-38 (encompassed within Apple's citations). And as described above with respect to the '337 patent, Apple's inclusion of specification excerpt 13:20-59 (i.e., 13:3-41 in the '337 patent) as part of the '830 claim 20 algorithm helps illustrate why Apple's proposal would be incomprehensible to a jury and should be rejected. *See, e.g.*, Section III.A.2 (discussing block quotation annotated in red and green). Apple's proposed algorithms for '830 claims 1, 19, and 20 seek to require—just for the control component limitations—a mapping of everything in Figure 7A, everything in Figure 7B, everything in Figure 7C, all ***1146 words*** contained in 6:52-8:40 of the specification, and for claim 20 the additional ***324 words*** contained in 13:20-59 of the specification. That would not assist the jury in deciding infringement and validity issues, even if they did not contain extraneous steps that must be excluded under Federal Circuit law.

The parties' **second dispute** is whether the corresponding structure for each '830 control component must include "the switches shown in Figures 5A–6 and described at 5:52–6:5, 6:9–16" as Apple proposes. For the same reasons described above with respect to the '337 patent, the Court should reject Apple's proposed inclusion of "switches" in the corresponding structure for the '830 "control component" terms. *See supra* Section III.A.2; Goossen Decl. ¶ 42.

The **third dispute** is whether an algorithm is required if the corresponding structure is a

microcontroller. As described above with respect to the ’337 patent, there is no need to identify an algorithm for the microcontroller to perform. *See supra* Section III.A.2; Goossen Decl. ¶ 43.

The parties’ **fourth dispute** concerns the disclosed oscillator circuit. Apple’s proposed corresponding structure fails to recognize that the oscillator circuit disclosed in the specification is sufficient for performing the function of ’830 claims 1 and 19—and that this oscillator circuit does not require an algorithm. The oscillator circuit should be included as an alternative corresponding structure because it is sufficient for performing the claimed function. Goossen Decl. ¶ 44; *Micro Chem*., 194 F.3d at 1258-59. As the specification explains:

> Alternative, lower-cost linear-vibration modules can be designed and manufactured by **replacing the processor** or microcontroller (602 in FIG. 6) of the above-described linear-resonant vibration module **with a simpler oscillator circuit** with additional control circuitry. The H switch (620 in FIG. 6) can be controlled by an oscillating current input rather than digital outputs from a microprocessor. Replacing the CPU or microprocessor with an oscillator and additional simple control circuitry produces a less functional, generally lower-Q, but also more economical linear vibration module that, although lacking the extremely broad range of vibration patterns and modes available to processor or microprocessor-controlled vibration modules, can nonetheless **access a much larger portion of the amplitude/frequency space than can be accessed by currently available fixed-amplitude or fixed-frequency vibration modules**.
>
> In one example implementation of an **oscillator-controlled linear vibration module,** a variable-frequency **oscillator circuit** can be controlled by user input to drive the H switch or other H-switch-like circuit to operate the linear vibration module at **different frequencies**. A user is provided an input feature that allows the user to directly adjust the frequency of the variable oscillator and thus the vibrational frequency produced by the linear vibration module. The user is additionally provided with an input feature to allow the user to control the current or duty cycle used to drive the linear vibration module and to thus **increase and decrease the amplitude** of vibration produced by the linear vibration module. Thus, a **user can control both the frequency of vibration and the amplitude of vibration**.

’830 patent at 11:57-12:19. Similarly, dependent claim 2 also indicates that the “control component” of claim 1 can be an oscillator circuit. *See id.* at cl. 2. It is undisputed that the specification describes processor-based embodiments that allow for both frequency and amplitude

to be adjusted, and the specification explicitly characterizes the oscillator circuit embodiment as one in which the processor is replaced by the oscillator circuit to provide a more economical system that "lack[s] the extremely broad range of vibration patterns and modes available to processor or microprocessor-controlled vibration modules" but still provides much greater amplitude variability than a fixed-amplitude vibration module. *Id.* And because an oscillator circuit is not a general-purpose computer and can perform the claimed function without additional special programming, no algorithm is required for this alternative corresponding structure. *See* Goossen Decl. ¶ 44.

4. Resonant's proposed structure for '882 claims 1 and 10 should be adopted

As with the '767, '337, and '830 patents, Resonant's proposed algorithm for '882 claims 1 and 10 includes the necessary steps for performing the claimed function and nothing more. Apple's proposed algorithm includes unnecessary steps and should therefore be rejected. Goossen Decl. ¶¶ 45-48.

Resonant's proposed algorithm provides a set of steps that come from the intrinsic evidence and can be understood and applied by the jury. Goossen Decl. ¶ 45. **Step (a)** is "receive a target frequency." *See, e.g.*, '882 patent at 31:31-33 (with reference to Fig. 45: "When a target frequency ω_t, is received in step 4512, the control initiates oscillation of the mass in step 4514."). **Step (b)** is "receive sensor outputs indicating (1) position of the mass, or (2) position and velocity of the mass." *See, e.g.*, *id.* at 31:20-24 ("the ORM 4502 includes a direct sensor a 4504 that directly determines the position and velocity of the moving weight or mass 4506"); *id.* at 31:37-43 ("with reference to Fig. 45: In step 4519, the control logic reads the position and velocity data from the sensor. This may involve a certain amount of computation, such as computing the difference and position with time over several readings …."); *id.* at 32:1-4 ("A series of captured photodiode-

sensor outputs at consecutive points in time provides the information needed to accurately compute the velocity of the moving mass."). **Step (c)** is "generate control outputs based on the target frequency and the current position and velocity of the mass." *See, e.g.*, *id.* at 31:24-28 ("ORM control logic 4508 that can directly use the position and velocity information to update ORM control in order to achieve a target frequency ω_t"); *id.* at 31:43-46 (with reference to Fig. 45: "Then, in step 4520, the appropriate control is computed based on the target frequency ω_t and the current position and velocity of the moving mass p and v").

Apple's proposed algorithm includes extraneous steps. Goossen Decl. ¶ 46. For example, Apple's proposed algorithm includes extraneous introductory language and other non-limiting description. *See, e.g.*, *id.* at 31:19-20 ("FIG. 45 illustrates an alternative approach to sensing the driving oscillations produced by an ORM."); *id.* at 31:54-56 ("In many cases, the position and velocity data is more accurate and far more timely provided than position and velocity data derived from indirect sensing and inference."); *id.* at 31:57-60 ("There are many different approaches to direct sensing of the position and velocity of a moving mass within an ORM. FIGS. 46A-B illustrate several possible direct-sensing approaches."). These are not claim limitations, yet Apple seeks make them so in its proposed algorithm. As another example, Apple seeks to include language stating how "the control logic ***continuously receives*** position and velocity data from the sensor," even though the claimed function can be performed without such continuous receipt of sensor data. Goossen Decl. ¶ 46. And while Apple includes extraneous limitations, it curiously ignores that the specification also discloses other types of direct sensors outside of the specification portions Apple cites. *See, e.g.*, *id.* at 32:14-33. If Apple seeks to limit the claims only to specifically disclosed sensors, it should at least be required to include all such disclosed options. But even with that exclusion, Apple's proposed algorithm for '882 claims 1 and 10 seeks to require—just for the

control component limitation—a mapping of everything in Figure 45 and all ***578 words*** contained in 31:19-32:33 of the specification. That would not assist the jury in deciding infringement and validity issues, even if it did not contain extraneous steps that must be excluded under Federal Circuit law (which it plainly does).

In addition, the parties dispute whether an algorithm is necessary for the disclosed microcontroller. As described above with respect to the ’337 patent, there is no need to identify an algorithm for the microcontroller. *See supra* Section III.A.2; Goossen Decl. ¶ 48.

B. Preambles of ’337 claim 2 and ’830 claim 20

Resonant’s Proposal	Apple’s Proposal
Preamble is not limiting; no construction	**Limiting**

The preambles of ’337 claim 2 and ’830 claim 20 are not limiting. Apple’s argument to the contrary is essentially that the specification and titles of these patents includes the phrase “vibration module.” Dkt. 75 at 22-24. That does not make a preamble limiting.

The challenged preambles here do not provide antecedent basis for limitations recited in the claim body and do not recite additional structure because each claim body already recites a structurally complete invention. *See, e.g.*, *Acceleration Bay, LLC v. Activision Blizzard Inc.*, 908 F.3d 765, 770 (Fed. Cir. 2018) (“a preamble is not limiting where a patentee defines a structurally complete invention in the claim body and uses the preamble only to state a purpose or intended use for the invention” (quotation marks omitted)); *Arctic Cat Inc. v. GEP Power Prod., Inc.*, 919 F.3d 1320, 1327 (Fed. Cir. 2019) (same); Goossen Decl. ¶ 49. Apple does not and cannot show otherwise.

And while Apple points to Resonant’s agreements to construe the preambles of ’337 claim 1 and ’830 claim 19 as limiting, Apple fails to mention that those preambles provide explicit a/the antecedent basis for the body of those claims. *See* ’337 claim 1[pre] (“A linear vibration module”);

’337 claim 1[g] (“the linear vibration module”); ’830 claim 19[pre] (“A vibration module”); ’830 claim 19[g] (“the vibration module”). Those are not the facts with either challenged preamble because neither provides such antecedent basis for limitations of the claim body. Contrary to Apple’s assertion, Resonant’s position is not that a preamble can be deemed limiting *only* if it provides such antecedent basis. *See* Dkt. 75. But the fact remains that Apple offers no principled justification for construing these specific preambles as limiting under Federal Circuit law.

C. Typographical error in ’830 claim 4

Claim Term	Resonant’s Proposal	Apple’s Proposal
“claim 1” (’081 and ’830 patents, cl. 4)	“**claim 3**”; not indefinite	Plain and ordinary meaning
“the one or more operational control outputs” (’830 patent, cl. 4)	Plain and ordinary meaning; **not indefinite**	**Indefinite; no antecedent basis**
“the received output signals” (’830 patent, cl. 4)		
“the sensors” (’830 patent, cl. 4)		
“the one or more sensors” (’830 patent, cl. 4)		

All five of the claim construction disputes listed above relate to the same issue. Claim 4 of the ’830 patent includes a one-character typographical error that should be corrected. Instead of claim 4’s preamble reciting “The [linear] vibration module of claim **1**,” the preamble should read “The [linear] vibration module of claim **3**.” It is clear from the claim language that this is a one-character typo, and the specification and prosecution history do not suggest any different interpretation. Resonant proposes that the typographical error be corrected, such that the phrase “of claim 1” appearing at the start of claim 4 would be replaced with “of claim 3.”

The standard for judicial correction is met here. *See, e.g.*, *Novo Industries LP v. Micro Molds Corp.,* 350 F.3d 1348, 1354 (Fed. Cir. 2003) (correction is appropriate “only if (1) the correction is **not subject to reasonable debate** based on consideration of the claim language and the specification and (2) the **prosecution history does not suggest a different interpretation** of

the claims")[9]; *Ollnova Techs. Ltd. v. ecobee Techs., ULC d/b/a ecobee*, No. 2:22-CV-00072-JRG, Dkt. No. 105 at 9 (E.D. Tex. Apr. 10, 2023) (hereinafter "*Ollnova*") (quoting same standard and making judicial correction); Goossen Decl. ¶¶ 50-56. According to Apple, it is "equally plausible" that the patentee mistyped a single numeral as it is that the patentee mistakenly introduced four new phrases in claim 4, each preceded by the definite article "the." Dkt. 75 at 29. That is not a credible argument. It is objectively much easier for a patent claim drafter to mistakenly type a "1" instead of a "3" than it would be to mistakenly add four new phrases into a claim, each preceded by the definite article "the" but without any antecedent basis. Thus, the two corrections identified by Apple are not "equally plausible." *Id*. Apple's entire indefiniteness argument rests upon this flawed premise.

The patentee plainly intended to refer back to the immediately preceding claim 3, which provides clear antecedent basis for all of the phrases Apple challenges. Claim 4 builds upon claim 3 by adding further limitations to the "adjusts" limitation of claim 3:

> 3. The vibration module of claim 1 wherein the control component receives output signals from sensors within the linear vibration module during operation of the vibration module and adjusts one or more operational control outputs of the control component according to the received output signals from the sensors.
>
> 4. The vibration module of claim 1 wherein the control component adjusts the one or more operational control outputs of the control component according to the received output signals from the sensors in order that subsequent operation of the vibration module produces desired outputs from the one or more sensors corresponding to one or more operational control parameters.

'830 patent at cls. 3, 4; *see also id.* at 6:33-51 (describing how sensor output signals are received and used in adjusting control outputs, consistent with the limitations of claims 3 and 4).

Neither the prosecution history nor any other intrinsic evidence suggests any different

[9] All emphasis in quoted material has been added unless otherwise noted.

interpretation. All intrinsic evidence either supports Resonant's conclusion (i.e., one-character typo) or is neutral on the subject. And Resonant's proposed correction "will not impact the scope of the claim, as the correction aligns with how a skilled artisan would understand the limitation in its uncorrected form." *Ollnova* at 11; *see* Goossen Decl. ¶ 52. Claim 4 as corrected indisputably would be fully supported by the specification. *E.g.*, '830 patent at 6:33-51, 7:42-8:19, Figs. 6, 7B.

According to Apple, the specification supports both of its possible corrections "as it does not limit the location of 'sensors' to those 'within the vibration module.'" Dkt. 75 at 29. The absence of an explicit contrary teaching is not support for Apple's baseless Correction 1, and Apple cannot dispute that the specification discloses sensors within the vibration module even if it does not explicitly say that is the only possible configuration. *E.g.*, '830 patent at 6:16-37, Fig. 6 (sensor 632 within LRVM 600).

And while Apple cites case law supposedly supporting its position, that reliance is misplaced. For example, Apple purports to quote from the *Arlington* case, but the quotation Apple refers to appears nowhere in the opinion—not in footnote 1 or anywhere else. *Compare* Dkt. 75 at 29, *with Arlington Indus., Inc. v. Bridgeport Fittings, Inc.*, 345 F.3d 1318, 1331 n.1 (Fed. Cir. 2003). In Apple's other cited case, *Ocean Semiconductor*, the plaintiff asked the court to correct "said process chamber" to read "said process tool," but "the specification describes the process chamber and process tool as different components," which the court noted was also clear from other claims (e.g., claim 1 reciting "[a] process tool, comprising: a process chamber ..."). *Ocean Semiconductor LLC v. Huawei Device USA, Inc.*, No. 4:20-cv-00991-ALM, 2022 WL 389916, at *13-14 (E.D. Tex. Feb. 8, 2022). There are no such facts here.[10]

[10] Notably, "claims are not necessarily invalid for a lack of antecedent basis." *Microprocessor Enhancement Corp. v. Texas Instruments Inc.*, 520 F.3d 1367, 1376 (Fed. Cir. 2008). In particular,

D. Typographical error in '882 claim 17

Claim Term	Resonant's Proposal	Apple's Proposal
"claim 1" ('882 patent, cl. 17)	"**claim 10**"; not indefinite	Plain and ordinary meaning
"the physical device" ('882 patent, cl. 17)	Plain and ordinary meaning; **not indefinite**	**Indefinite; no antecedent basis**
"the one or more oscillating resonant modules" ('882 patent, cls. 17, 19, 20)		

As with the preceding dispute regarding '830 claim 4, there is a one-character typo in the preamble of '882 claim 17. Goossen Decl. ¶¶ 57-61. Resonant respectfully requests that the Court correct that error, which would obviate Apple's indefiniteness arguments.

Judicial correction is again appropriate here because the correction is not subject to reasonable debate. Indeed, the prosecution history—which Apple tellingly ignores—leaves zero room for any debate. Apple argues that it is "equally plausible" that the recitation of "claim 1" in the preamble of claim 17 was intended to refer to claim 10 (as Resonant asserts) as opposed to claim 11, 12, 13, 14, 15, or 16. Dkt. 75 at 30. While Apple ignores the intrinsic record, this Court should not. During prosecution, the applicant canceled then-pending claims 17-20 and provided new claims 21-24, which were then allowed and ultimately issued as claims 17-20. Ex. B ('882 FH) at 6, 17, 18. In the remarks accompanying this amendment, the applicant explicitly states that these new dependent claims (i.e., then claims 21-24, which ultimately issued as claims 17-20, respectively) were written to "***depend[] from independent claim 10***":

"when a claim's meaning would reasonably be understood by skilled artisans when read in light of the specification, it is not invalid." *Solas OLED Ltd. v. Samsung Elecs. Co.*, No. 2:21-CV-00105-JRG, 2022 WL 36222, at *5 (E.D. Tex. Jan. 4, 2022). Even without Resonant's proposed correction, it is clear from surrounding claim language and the specification what each of the allegedly indefinite phrases refers to, such that their meaning would still be readily understood.

21. (new) The physical device of claim 1 further comprising:

a controller, within the physical device, that

receives control signals input to the physical device, and

outputs control signals to one or more of the one or more oscillating resonant modules to controls the vibration response produced by the one or more oscillating resonant modules.

Independent claim 10 has been amended to incorporate the limitations of independent claim 1 that are neither taught nor suggested by any of the cited references. Therefore, claim 10 is now unanticipated and nonobvious over cited references. Independent claim 17 independent claims 18-20 have been canceled to provide for four additional dependent claims depending from independent claim 10.

☐ Claims renumbered in the same order as presented by applicant

CLAIMS

Final	Original	Final	Original	Final	Original	Final	Original	Final	Original
1	1	10	10	-	19				
2	2	11	11	-	20				
3	3	12	12	17	21				
4	4	13	13	18	22				
5	5	14	14	19	23				
6	6	15	15	20	24				

Id. Apple's assertion that it is "equally plausible" that the applicant intended to refer to claim 10 as some other claim 11-16 completely ignores the applicant's explicit statement that it intended to refer to claim 10. This is dispositive on Apple's indefiniteness claim for '882 claim 17, as it shows that "a POSITA would readily see in the prosecution history that the applicant clearly intended to refer to claim 10, rather than claim 1."[11] Goossen Decl. ¶ 61.

E. "the mass" ('882 patent, claims 1, 3-6, 10)

Claim Term	Resonant's Proposal	Apple's Proposal
"the mass" ('882 patent, cls. 1, 3-6, 10)	Plain and ordinary meaning, in which all recitations of "a mass" and "the mass" refer to the same mass	Indefinite

[11] Apple also argues that independent claim 10's recitation of "the controller" would lack antecedent basis if claim 17 were corrected as Resonant proposes because dependent claim 17 recites "a controller, within the physical device." Dkt. 75 at 30. Apple has not preserved an indefiniteness challenge to claim 10, and this argument is non-sensical because claim 17 depends from claim 10.

To manufacture an indefiniteness argument, Apple acts as though claims 1 and 10 introduce two different masses (Dkt. 75 at 26-27), but those are not the facts. Nor is there anything in the specification or prosecution history to suggest that the claimed inventions require two different masses. Instead, the first recitation of "a mass" in claims 1 and 10 is merely used to describe the oscillation path, whereas the second recitation of "a mass" introduces that as a structural limitation. '882 patent at cls. 1, 10 ("an oscillation path, which represents a segment of a space curve, along which a point within a mass moves; a mass that is driven by energy supplied to the oscillating resonant module to oscillate back and forth along the oscillation path that represents a segment of a space curve"). A POSITA would understand the claim language with reasonable certainty. Goossen Decl. ¶¶ 62-64.

Apple's litigation-driven interpretation is absurd. In Apple's view, the claim introduces an oscillation path and specifies that a mass moves along it, and in the next claim element introduces a brand new second mass that—purely coincidentally—moves along the same oscillation path that was just explained as having a mass that moves along it. And under Apple's view, the independent and dependent claims go on to recite "the mass" to refer to one of these two different masses without specifying which one. This is a contrived view of the claims that is illogical and has no support in the intrinsic record. Apple's argument should be rejected. [12]

It also bears noting that Apple's cited case law is in no way analogous to these facts. For example, Apple attempts to analogize to the double recitation of "a material" in *Sensor Electronics*, but the claim there recited "a first layer composed of a material including an element; and a second layer composed of a material including the element, wherein a molar fraction of the element differs

[12] Apple erroneously seeks an indefiniteness ruling as to '882 claim 7. That claim is not asserted against Apple and Apple has no counterclaims, so claim 7 is not subject to claim construction.

for the first layer and the second layer by at least five percent." *Sensor Elec. Tech., Inc. v. Bolb, Inc*., No. 18-CV-05194-LHK, 2019 WL 4645338, at *28 (N.D. Cal. Sept. 24, 2019). Besides this already indicating the materials were different, the Court further noted that the specification disclosed "embodiments in which semiconductor layers, such as the first and second layers of claim 11, are composed of different materials." *Id.* at *32. There are no such facts here.

F. "the one or more sensors" ('767 patent, claim 1); "the oscillating resonant modules ('882 patent, claim 20)

A POSITA would understand these claims with reasonable certainty. Goossen Decl. ¶¶ 65-67. With respect to Apple's argument on the '767 patent (Dkt. 75 at 27), it is clear that claim 1's recitation of "the one or more sensors" refers to the same "sensors" recited earlier in the claim. As Dr. Goossen explains, "[a]s is commonly the case in feedback systems involving multiple sensors, one sensor may already be providing a desired output while another sensor may not be, in which case less than all of the operational control outputs may need to be adjusted in order to obtain desired outputs from the sensor that was not previously producing desired outputs." Goossen Decl. ¶¶ 66. The "one or more" preceding "sensors" accounts for the fact that adjustment may only be needed to address one of the sensors at a given time, rather than all of them. This is also reflected in the language of '767 claim 1. *See, e.g.*, '767 patent at cl. 1 ("produces desired outputs from the one or more sensors corresponding to one or more operational control parameters").

With respect to the '882 patent, it is similarly clear that claim 20's recitation of "the oscillating resonant modules" refers to the same "the one or more oscillating resonant modules" recited earlier in the claim. While the "one or more" was not repeated again in the claim, it cannot be disputed that "one or more oscillating resonant modules" is a proper antecedent for "oscillating resonant modules," and a POSITA would not be confused as to exactly what is referenced. It is clear that "the oscillating resonant modules" refers back to "the one or more oscillating resonant

modules" recited only a few words earlier in claim 20. Goossen Decl. ¶ 67; '882 patent at cl. 20 ("The physical device of claim 17 wherein the controller controls **the one or more oscillating resonant modules** to each produce a vibration response, the vibration responses produced by **the oscillating resonant modules** together producing a resonant-frequency vibration mode in the physical device.").

G. "desired outputs" ('767 patent, claim 1; '830 patent, claim 4)

Apple's argument that "desired outputs" is indefinite should also be rejected. *See* Dkt. 75 at 28; Goossen Decl. ¶¶ 68-69. The term "desired outputs" is not a subjective term because the claim language makes clear that the desired outputs "correspond[] to one or more operational control parameters." '767 patent at cl. 1; '830 patent at cl. 4. The specification of each patent further explains how such parameters can be varied "to produce desired vibrational amplitudes and frequencies over a wide region of amplitude/frequency space," listing numerous examples of such variable parameters. *E.g.*, '767 patent at 10:9-54; *see also id.* at 8:17-24 (additional discussion of "desired" outputs); '830 patent at 14:59-15:37, 8:54-62 (corresponding disclosures in '830 specification). For example, the specification of each patent discloses:

> A linearly oscillating mechanism is characterized by **parameters** that can be straightforwardly varied in order to produce vibrations of a **desired** amplitude and frequency over a very broad region of amplitude/frequency space. Combining a linearly oscillating vibration-inducing mechanism with feedback control, so that the frequency of vibration falls close to the resonant frequency of the LRVM, results in **optimal** power consumption with respect to the amplitude and frequency of vibration produced by the LRVM.

'767 patent at 4:6-15; '830 patent at 4:33-45 (same quotation with an additional sentence between these two). Apple does not challenge the definiteness of the term "operational control parameters," and the intrinsic evidence plainly shows that "desired outputs" is not some subjective term like "aesthetically pleasing" but instead simply refers to the outputs intended to result from the operational control parameters. The scope and meaning of these claim terms would thus be

reasonably certain to a POSITA. Goossen Decl. ¶¶ 68-69.

Apple attempts to analogize this case to *Ultravision*, but its reliance is misplaced. *See* Dkt. 75 at 28. In that case, the numerical term "desired uniformity ratio" was found indefinite, but there was zero intrinsic evidence providing objective boundaries and claim differentiation showed that the term was subjective and unbounded. *Ultravision Techs., LLC v. Holophane Eur. Ltd.*, No. 2:19-cv-00291-JRG-RSP, 2020 WL 6271231, at *27-28 (E.D. Tex. Oct. 26, 2020) ("the term 'desired' does not appear in the specification"; "claim differentiation points to the subjectivity of this term" because the recited "'desired' ratio recited in [the challenged claim] must be broader than the ideal 3:1 ratio" recited in a claim that depended therefrom and was thus narrower). The facts here are much different. Here, "desired" appears repeatedly in the specifications; "desired outputs" is not a numerical term with unclear boundaries; and there is no claim differentiation showing subjectivity.

The facts here are more similar to those of *Revolaze*, which was decided by the same court as *Ultravision*. In that case, "the claims [were] directed to using a laser to create predetermined surface markings according [to] user-defined parameters," such that "the 'desired' marking is the intended, specified, design effect." *RevoLaze LLC v. J.C. Penney Co.*, No. 2:19-cv-00043-JRG, 2020 WL 697891, at *9 (E.D. Tex. 2020). As here, the claims in *Revolaze* recited parameters corresponding to the desired output. *Id.* at *10 ("obtaining an indication of the desired pattern" and "controlling said laser to produce outputs indicative of the desired pattern"). Finding that the "desired" terms were not indefinite and have their plain and ordinary meaning, the court determined that "whether a particular design or feature is 'desired' or 'undesired' is a function of the specified design, not the vagaries of any person's opinion." *Id.* at *11. The same is true here.

IV. <u>CONCLUSION</u>

For the foregoing reasons, Resonant's proposed constructions should be adopted.

Date: April 11, 2024

/s/ Reza Mirzaie

Reza Mirzaie
California Bar No. 246953
rmirzaie@raklaw.com
Kristopher Davis
California Bar No. 329627
kdavis@raklaw.com
Christian W. Conkle
California Bar No. 306374
cconkle@raklaw.com
Jason Wietholter
California Bar No. 337139
jwietholter@raklaw.com
Paul A. Kroeger
California Bar No. 229074
kroeger@raklaw.com
Qi Tong
California Bar No. 330347
ptong@raklaw.com
RUSS AUGUST & KABAT
12424 Wilshire Blvd. 12th Floor
Los Angeles, CA 90025
Phone: (310) 826-7474
Facsimile: (310) 826-6991

Attorneys for Plaintiff
Resonant Systems, Inc. d/b/a RevelHMI

CERTIFICATE OF SERVICE

I hereby certify that counsel of record who are deemed to have consented to electronic service are being served on April 11, 2024, with a copy of this document via the Court's CM/ECF.

/s/ Reza Mirzaie
Reza Mirzaie