US007154125B2

(12) **United States Patent**
Koide et al.

(10) **Patent No.: US 7,154,125 B2**
(45) **Date of Patent: Dec. 26, 2006**

(54) **NITRIDE-BASED SEMICONDUCTOR LIGHT-EMITTING DEVICE AND MANUFACTURING METHOD THEREOF**

(75) Inventors: **Norikatsu Koide**, Aichi (JP); **Toshio Hata**, Nara (JP); **Mayuko Fudeta**, Hiroshima (JP); **Daigaku Kimura**, Hiroshima (JP)

(73) Assignee: **Sharp Kabushiki Kaisha**, Osaka (JP)

(*) Notice: Subject to any disclaimer, the term of this patent is extended or adjusted under 35 U.S.C. 154(b) by 0 days.

(21) Appl. No.: **10/422,404**

(22) Filed: **Apr. 23, 2003**

(65) **Prior Publication Data**

US 2003/0218179 A1 Nov. 27, 2003

(30) **Foreign Application Priority Data**

Apr. 23, 2002 (JP) 2002-120576

(51) **Int. Cl.**
H01L 29/22 (2006.01)
H01L 33/00 (2006.01)

(52) **U.S. Cl.** **257/95**; 257/96; 257/97; 257/98; 257/99; 257/100; 257/101; 257/102; 103/79

(58) **Field of Classification Search** 257/103, 257/76, 79, 98
See application file for complete search history.

(56) **References Cited**

U.S. PATENT DOCUMENTS

5,792,698 A 8/1998 Nishitani
6,060,730 A * 5/2000 Tsutsui 257/103
6,441,403 B1 * 8/2002 Chang et al. 257/94
6,495,862 B1 * 12/2002 Okazaki et al. 257/103
6,735,230 B1 * 5/2004 Tanabe et al. 372/43
2001/0028100 A1 * 10/2001 Schmitz et al. 257/649
2001/0028667 A1 * 10/2001 Kaneko 372/45
2002/0117672 A1 * 8/2002 Chu et al. 257/79
2002/0136932 A1 * 9/2002 Yoshida 428/698
2004/0026709 A1 * 2/2004 Bader et al. 257/103
2006/0054898 A1 * 3/2006 Lai et al. 257/79

FOREIGN PATENT DOCUMENTS

JP 10-41586 * 2/1998
JP 11-68157 * 3/1999
JP 2000-174333 * 6/2000
JP 2000-196152 * 7/2000
JP 2002-289970 * 10/2002
TW 472400 1/2002
WO WO 98/42030 * 8/1998
WO WO 01/84640 * 11/2001

OTHER PUBLICATIONS

Chinese Office Action mailed on Aug. 6, 2004, for Patent Application No. 031232361, 15 pages.

* cited by examiner

Primary Examiner—Nathan Flynn
Assistant Examiner—Ahmed N. Sefer
(74) *Attorney, Agent, or Firm*—Morrison & Foerster LLP

(57) **ABSTRACT**

The nitride-based semiconductor light-emitting device and manufacturing method thereof are disclosed: the nitride-based semiconductor light-emitting device includes a reflective layer formed on a support substrate, a p-type nitride-based semiconductor layer, a light-emitting layer and an n-type nitride-based semiconductor layer successively formed on the reflective layer, wherein irregularities are formed on a light extracting surface located above the n-type nitride-based semiconductor layer.

3 Claims, 12 Drawing Sheets

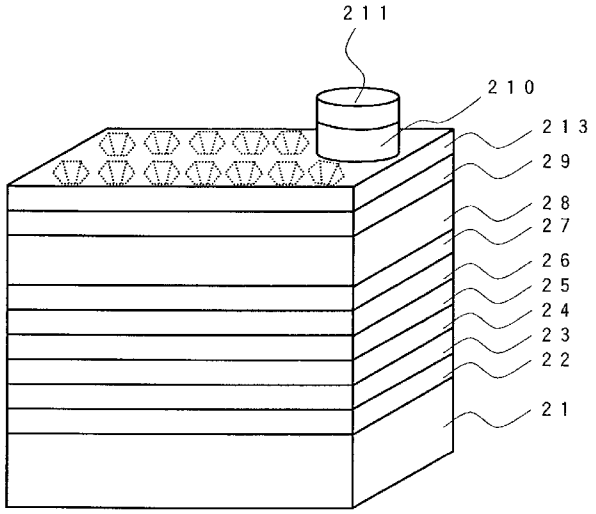

FIG. 1

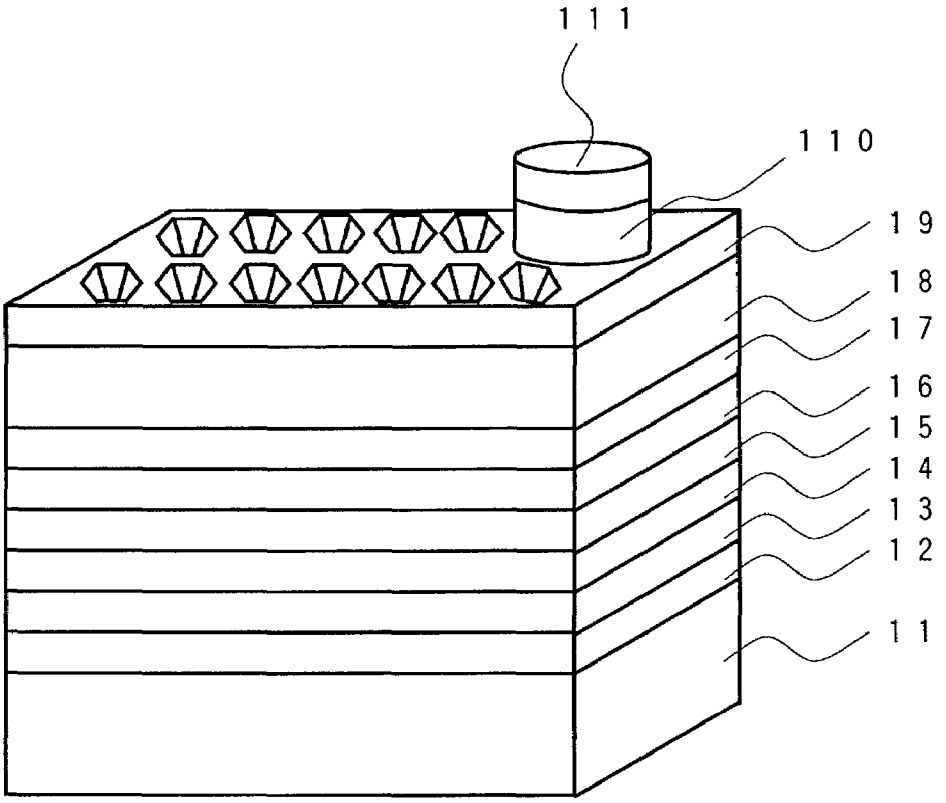

FIG. 2

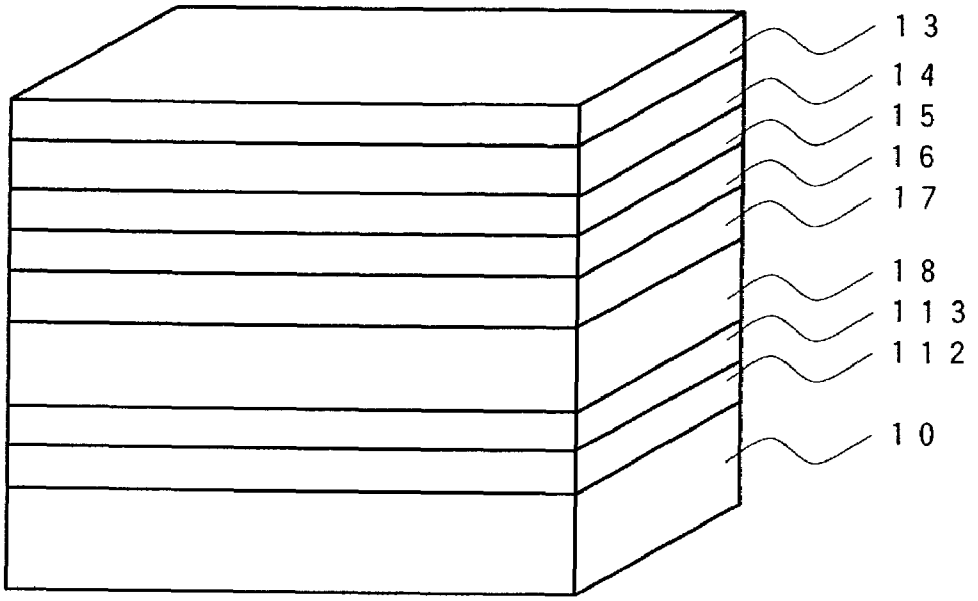

FIG. 3

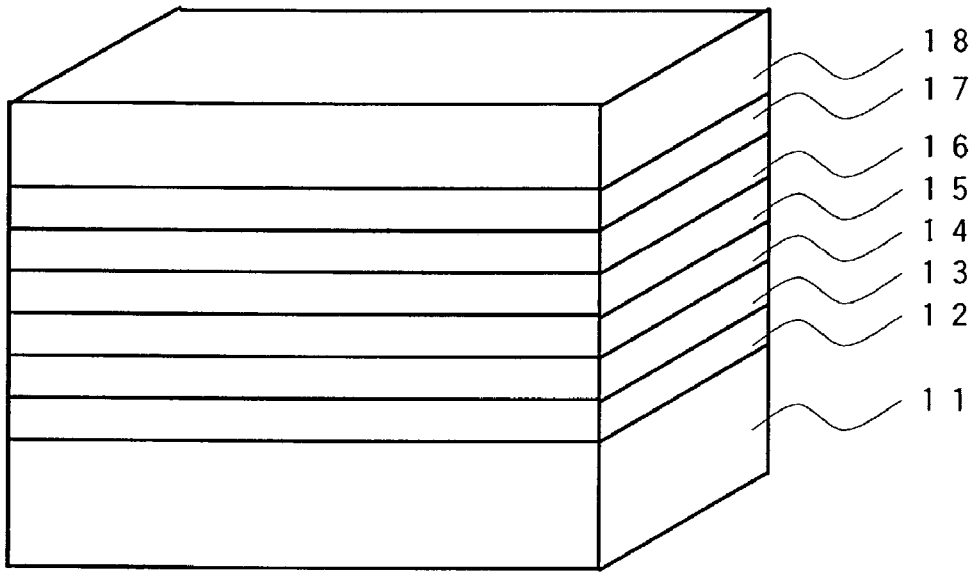

FIG. 4

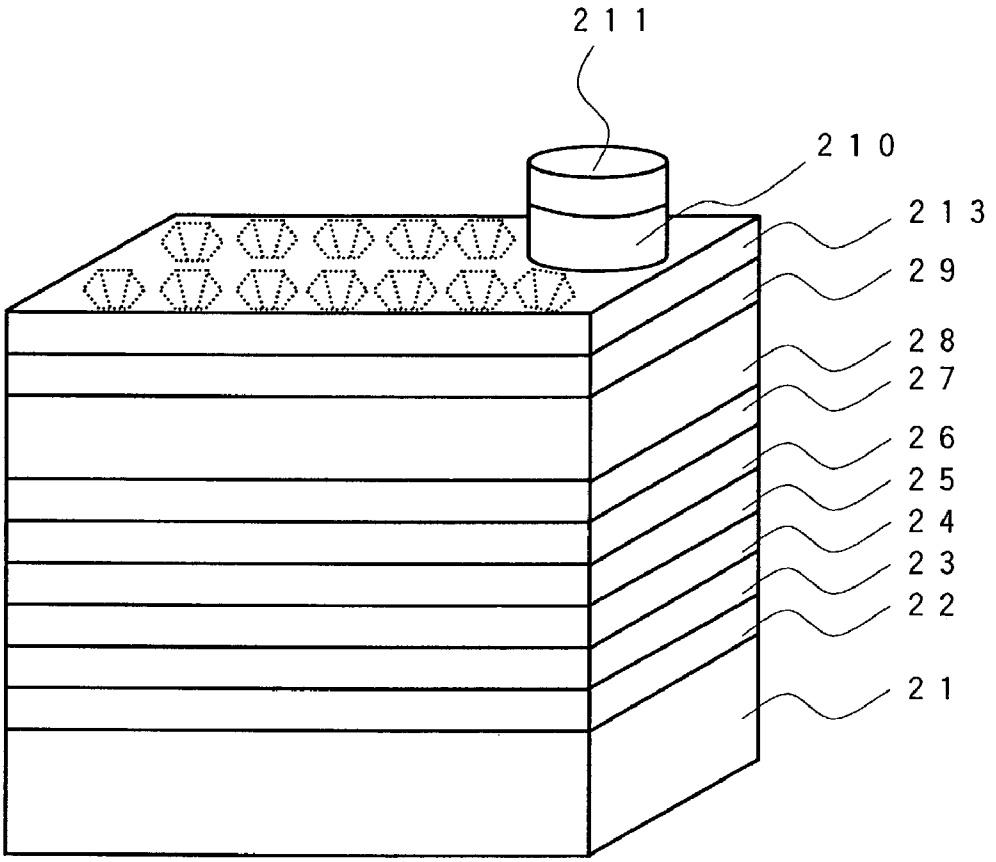

FIG. 5

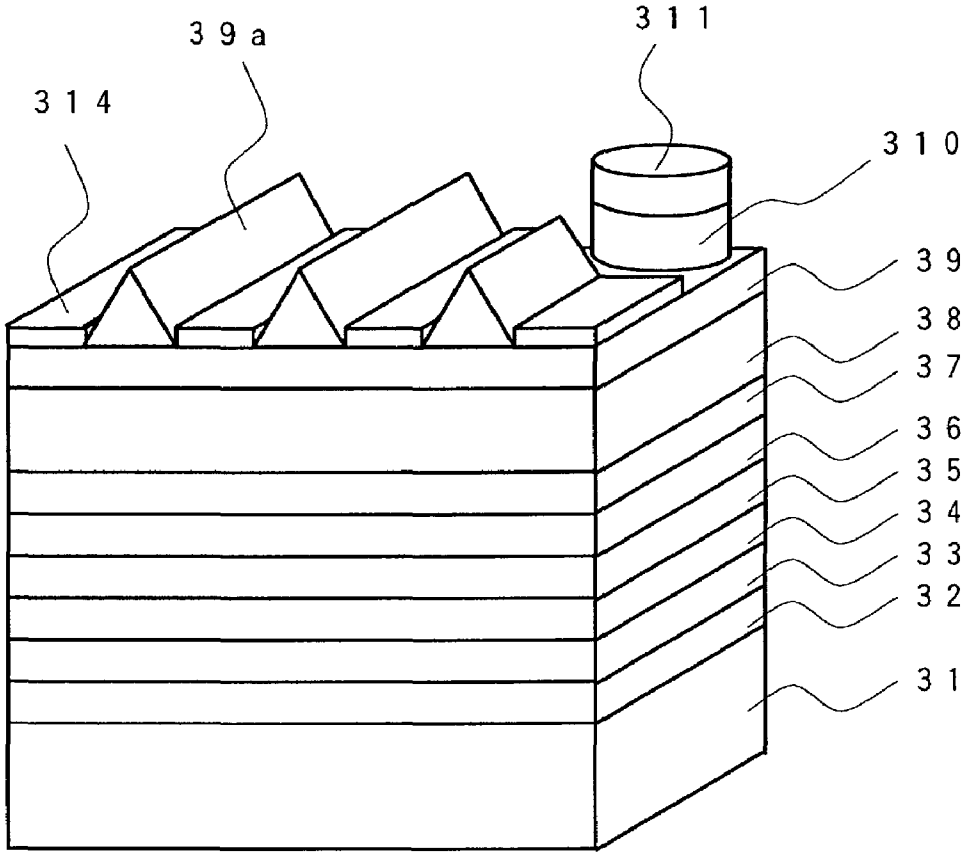

FIG. 6

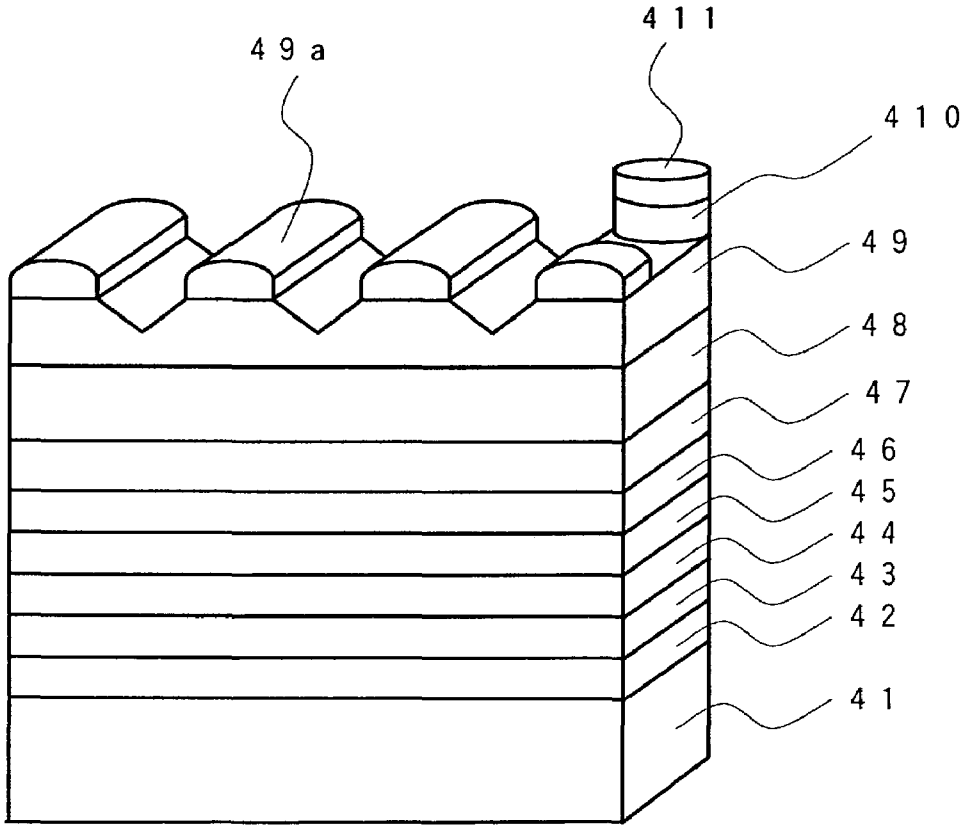

FIG. 7

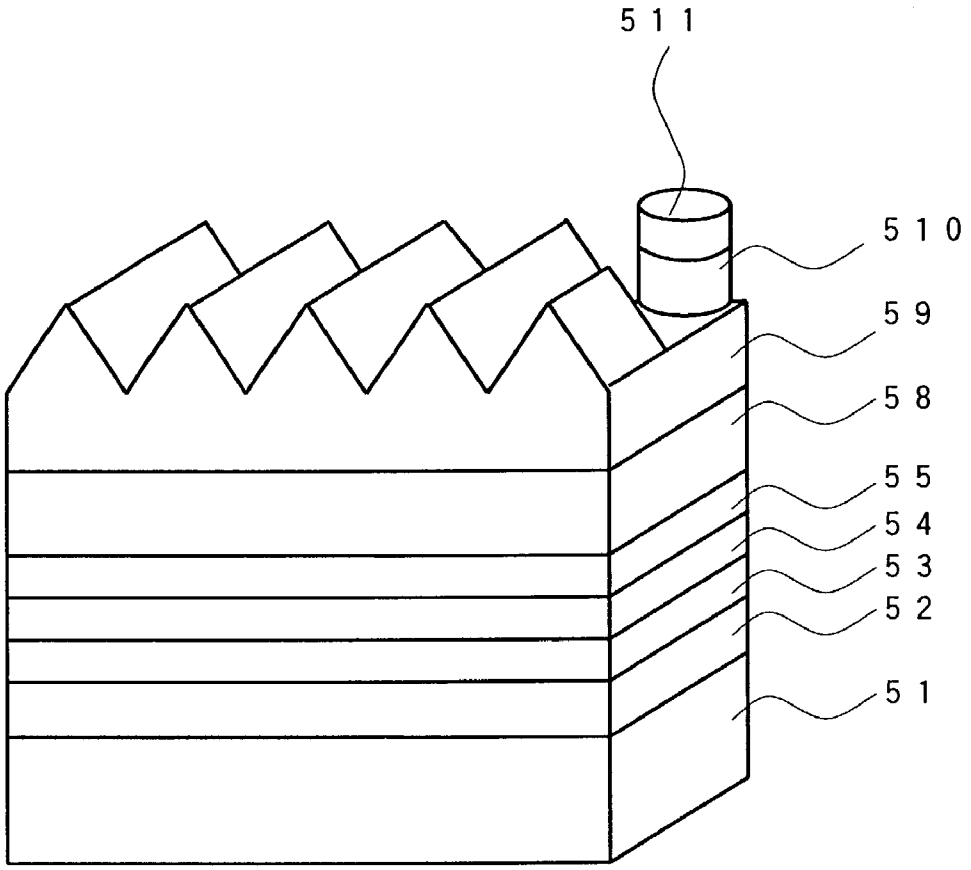

FIG. 8A

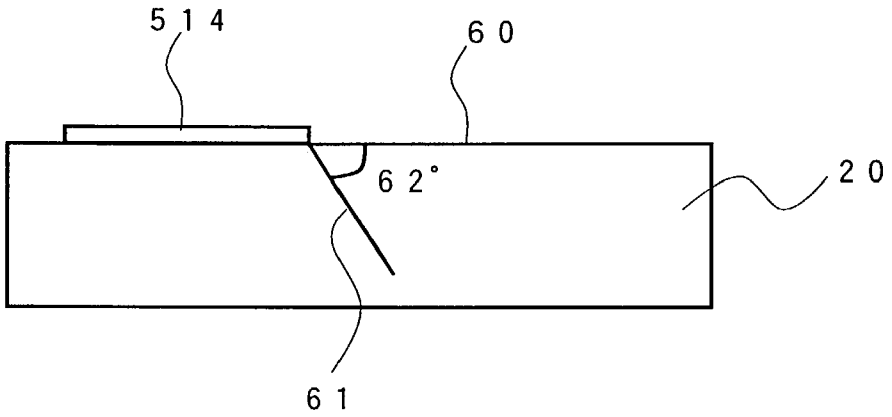

FIG. 8B

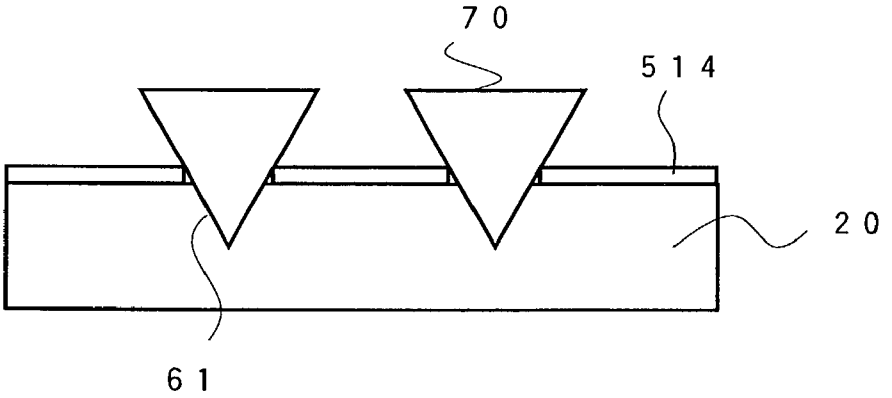

FIG. 8C

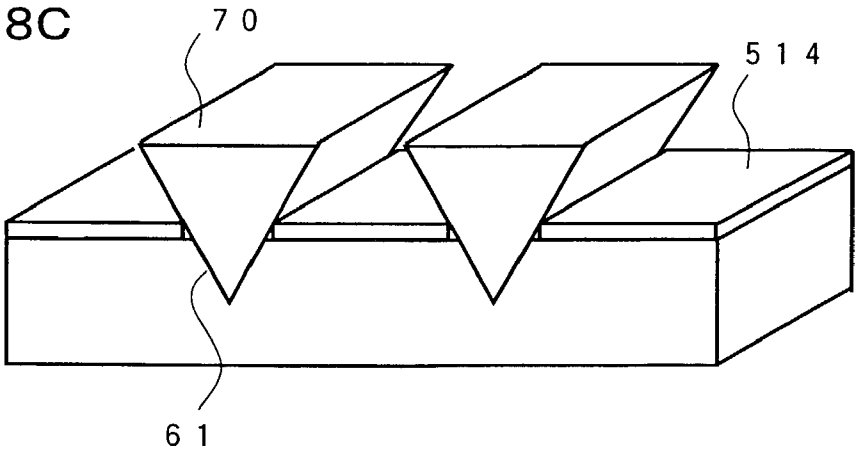

FIG. 9A

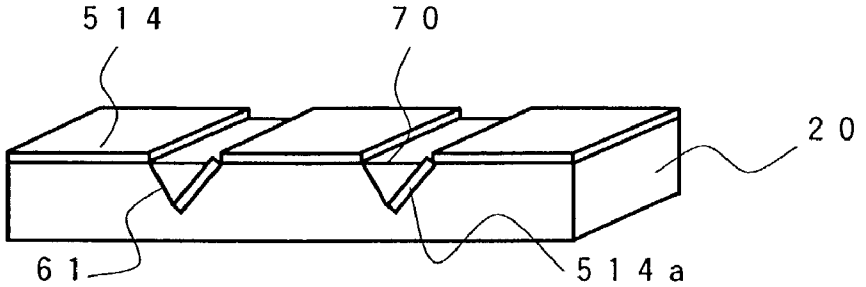

FIG. 9B

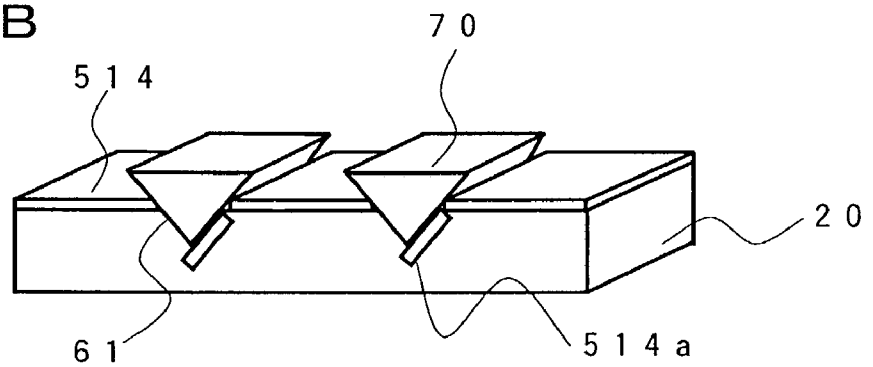

FIG. 9C

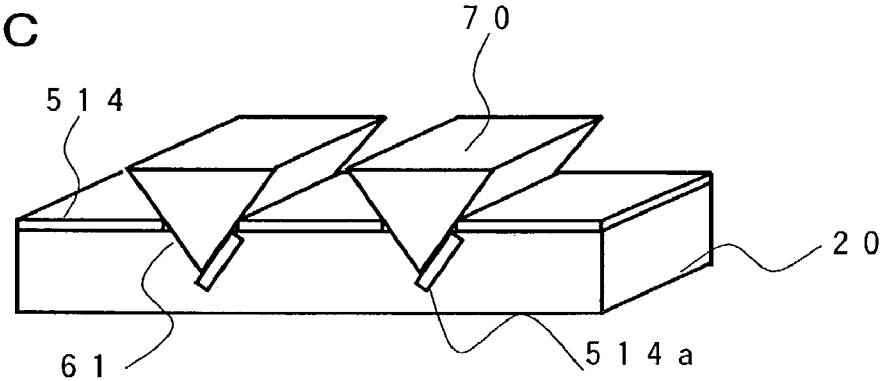

FIG. 9D

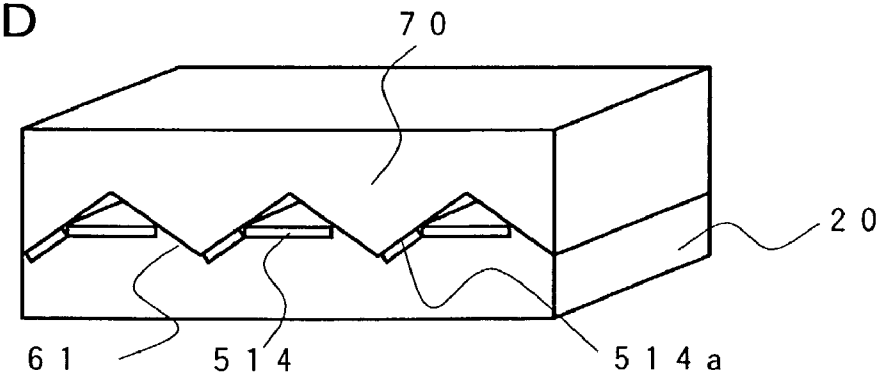

FIG. 10A

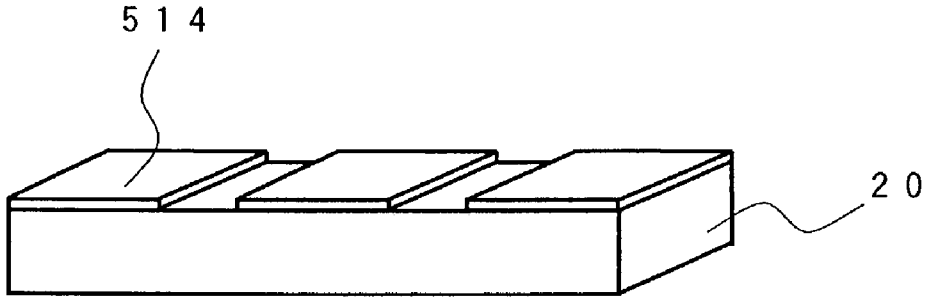

FIG. 10B

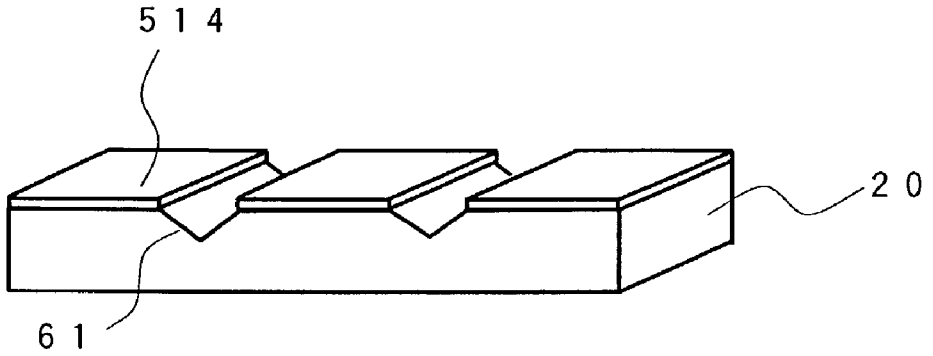

FIG. 10C

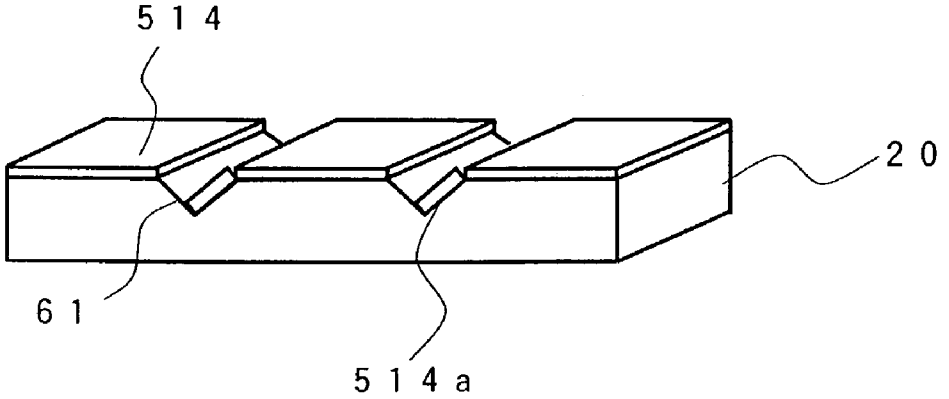

FIG. 11A

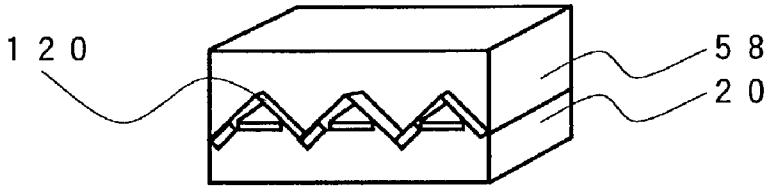

FIG. 11B

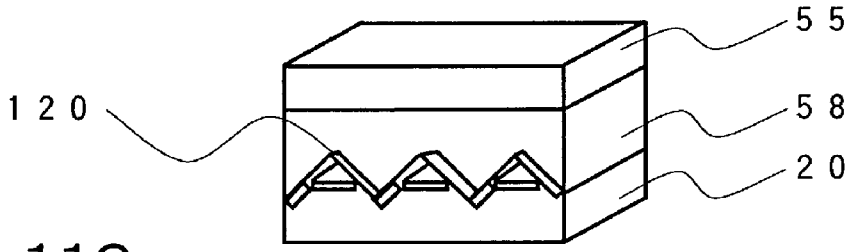

FIG. 11C

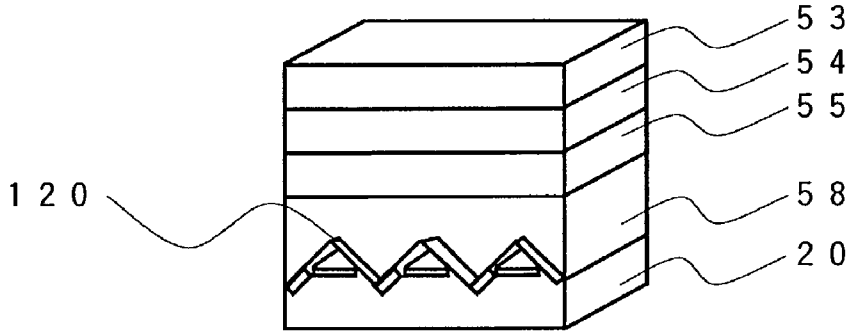

FIG. 11D

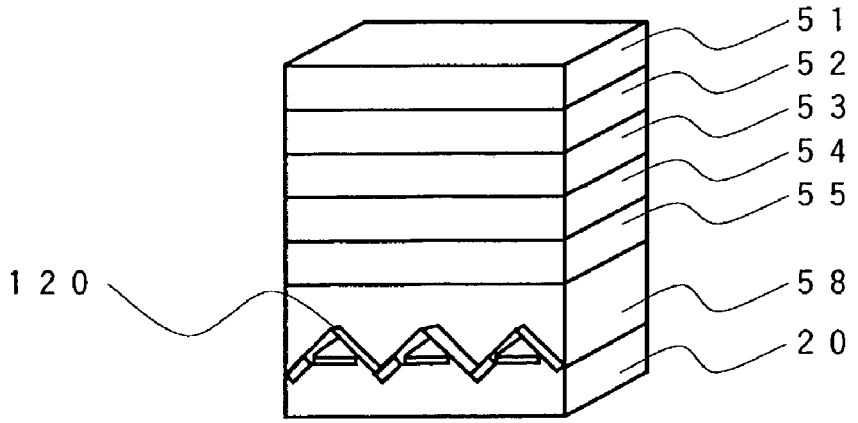

FIG. 12 PRIOR ART

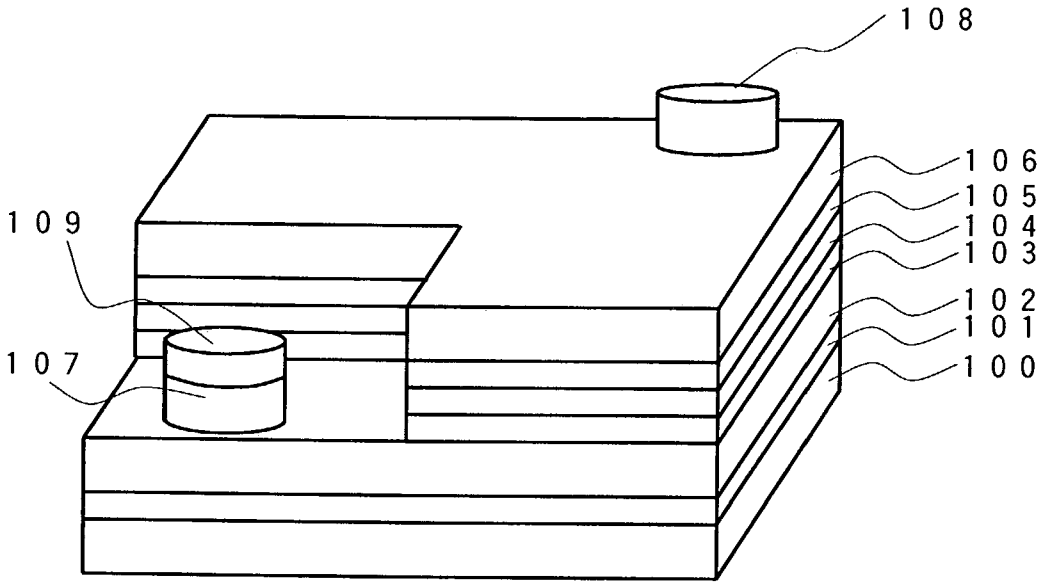

NITRIDE-BASED SEMICONDUCTOR LIGHT-EMITTING DEVICE AND MANUFACTURING METHOD THEREOF

BACKGROUND OF THE INVENTION

1. Field of the Invention

The present invention relates to a nitride-based semiconductor light-emitting device using a nitride-based semiconductor represented by the general formula $In_xAl_yGa_{1-x-y}N$ ($x+y+z=1$, $0 \leqq x \leqq 1$, $0 \leqq y \leqq 1$ and $0 \leqq z \leqq 1$) and a manufacturing method thereof.

2. Description of the Background Art

The conventional nitride-based semiconductor light-emitting devices are mostly fabricated by layering a nitride-based semiconductor layer on a sapphire substrate. In recent years, however, for the reduction of manufacturing cost of the light-emitting device, the use of silicon (Si) substrate have become common as the silicon substrate is less expensive and usable by a large area.

FIG. **12** shows a schematic perspective of a conventional nitride-based semiconductor light-emitting device using an Si substrate. The nitride-based semiconductor light-emitting device includes on an Si substrate **100**, an AlN buffer layer **101**, an n-type GaN layer **102**, an InGaN light-emitting layer **103**, a p-type AlGaN carrier block layer **104** and a p-type GaN contact layer **105** successively layered, a translucent electrode **106** formed on p-type GaN contact layer **105**, and an n-type-use electrode **107** formed on n-type GaN layer **102**. Further, a p-type-use pad electrode **108** is formed on translucent electrode **106** and an n-type-use pad electrode **109** is formed on n-type-use electrode **107**.

In this nitride-based semiconductor light-emitting device, however, a part of light emitted from InGaN light-emitting layer **103** is directed towards Si substrate **100** and absorbed by Si substrate **100**, whereby light extraction efficiency of the light emitted from InGaN light-emitting layer **103** is decreased.

It may be possible to form a reflective film on Si substrate **100** from materials such as metals to prevent the incidence of light to Si substrate **100** and to extract the light from the side surface of the semiconductor light-emitting device in the same manner as in a device with a sapphire substrate. However, the nitride-based semiconductor layer cannot be formed thick as the difference in thermal expansion coefficient between nitride-based semiconductor layers causes crack. Hence, it is impossible to improve light extraction efficiency by extracting light from the side surface of the nitride-based semiconductor layer using this portion to let the light emitted from the light-emitting layer pass through for the extraction.

To solve the problem as described above, Japanese Patent Laying-Open No. 2000-196152 discloses a light-emitting device including a p-type GaN semiconductor layer with irregularities and a light-emitting device including a light extraction layer with an irregular surface formed on a p-type GaN semiconductor layer via a transparent electrode. When the film thickness of the p-type GaN semiconductor layer is increased for the formation of irregularities, many cracks are formed in the p-type GaN semiconductor layer thereby increasing the driving voltage of the device. It is assumed that when the p-type GaN semiconductor layer is grown at a high temperature and brought back to room temperature after the growth, tensile stress applied on the p-type GaN semiconductor layer causes cracks and that the thickness of the film of the p-type GaN semiconductor layer also contributes to the liability of crack formation. In addition, the

p-type GaN semiconductor layer has a further disadvantage as it is unlikely to be low in resistance essentially and because of the film thickness, which leads to a further increase in the driving voltage of the device. Further, even when the transparent electrode is formed on the p-type GaN semiconductor layer, ohmic characteristics between the p-type GaN semiconductor layer and the transparent electrode is not favorable and contact resistance tends to become high, whereby the driving voltage of the device increases.

SUMMARY OF THE INVENTION

In order to achieve the objects as described above, a nitride-based semiconductor light-emitting device according to the present invention includes: a reflective layer formed on a support substrate; a p-type nitride-based semiconductor layer, a light-emitting layer and an n-type nitride-based semiconductor layer successively formed on the reflective layer; wherein a light extracting surface located above the n-type nitride-based semiconductor layer has irregularities. Here in the present invention, the light extracting surface located above the n-type nitride-based semiconductor layer may locate on an upper surface of the n-type nitride-based semiconductor layer or on an upper surface of a layer located above the n-type nitride-based semiconductor layer.

Here in the nitride-based semiconductor light-emitting device according to the present invention, it is preferable that a high refractive index film including one selected from a group consisting of silicon nitride (Si_3N_4), indium oxide (In_2O_3), neodymium oxide (Nd_2O_2), zirconium oxide (ZrO_2), titanium oxide (TiO_2), cerium oxide (CeO_2) and bismuth oxide (BiO_3) is formed on the n-type nitride-based semiconductor layer, and an upper surface of the high refractive index film is the light extracting surface.

Further, in the nitride-based semiconductor light-emitting device according to the present invention, it is preferable that a nitride-based semiconductor layer represented by $In_aGa_{1-a}N$ ($0<a \leqq 1$) is formed on the n-type nitride-based semiconductor layer and an upper surface of the nitride-based semiconductor layer represented by $In_aGa_{1-a}N$ ($0<a \leqq 1$) is the light extracting surface.

Still further, in the nitride-based semiconductor light-emitting device according to the present invention, the maximum thickness of the nitride-based semiconductor layer represented by $In_aGa_{1-a}N$ ($0<a \leqq 1$) is preferably in the range of 200 to 800 nm.

Additionally, in the nitride-based semiconductor light-emitting device according to the present invention, it is preferable that a silicon-doped nitride-based semiconductor layer represented by $In_aGa_{1-a}N$ ($0<a \leqq 1$) is formed on the n-type nitride-based semiconductor layer, an upper surface of the silicon-doped nitride-based semiconductor layer is the light extracting surface, and a concentration of silicon contained in the silicon-doped nitride-based semiconductor layer is in the range of 5×10^{20}~5×10^{21} cm^{-3}.

Further, in the nitride-based semiconductor light-emitting device according to the present invention, it is preferable that the support substrate is formed by nickel plating and the reflective layer is a p-type-use electrode.

Still further, the present invention is a method of manufacturing the nitride-based semiconductor light-emitting device and includes the steps of: preparing a silicon substrate and successively forming an n-type nitride-based semiconductor layer, a light-emitting layer, and a p-type nitride-based semiconductor layer on the silicon substrate; forming a reflective layer on the p-type nitride-based semiconductor layer and forming a support substrate on the

reflective layer; inverting a wafer using the support substrate; removing the silicon substrate; and forming a light extracting surface with irregularities above the n-type nitride-based semiconductor layer.

Here in the method of manufacturing the nitride-based semiconductor light-emitting device according to the present invention, the irregularities of the light extracting surface are preferably formed through regrowth of the n-type nitride-based semiconductor layer.

In addition, in the method of manufacturing the nitride-based semiconductor light-emitting device according to the present invention, the irregularities of the light extracting surface is preferably formed through polishing.

In addition, in the method of manufacturing the nitride-based semiconductor light-emitting device according to the present invention, the irregularities of the light extracting surface is preferably formed through partial etching.

The foregoing and other objects, features, aspects and advantages of the present invention will become more apparent from the following detailed description of the present invention when taken in conjunction with the accompanying drawings.

BRIEF DESCRIPTION OF THE DRAWINGS

FIG. **1** is a schematic perspective of a nitride-based semiconductor light-emitting device of a first embodiment.

FIG. **2** is a schematic perspective of a wafer including nitride-based semiconductor layers of the first embodiment after the formation of a p-type clad layer.

FIG. **3** is a schematic perspective of a wafer including nitride-based semiconductor layers of the first embodiment after the removal of an Si substrate.

FIG. **4** is a schematic perspective of a nitride-based semiconductor light-emitting device of a second embodiment.

FIG. **5** is a schematic perspective of a nitride-based semiconductor light-emitting device of a third embodiment.

FIG. **6** is a schematic perspective of a nitride-based semiconductor light-emitting device of a fourth embodiment.

FIG. **7** is a schematic perspective of a nitride-based semiconductor light-emitting device of a fifth embodiment.

FIGS. **8**A~**8**C are schematic drawings conceptually showing a relation between the Si substrate and a facet surface.

FIGS. **9**A~**9**D are schematic drawings showing a process of crystal growth of a nitride-based semiconductor film.

FIGS. **10**A~**10**C are schematic drawings conceptually showing an example of a process of forming a facet surface through the removal of a portion of the Si substrate.

FIGS. **11**A~**11**D are schematic drawings conceptually showing an example of a process of manufacturing a nitride-based light-emitting device of the fifth embodiment.

FIG. **12** is a schematic perspective of a conventional nitride-based semiconductor light-emitting device.

DESCRIPTION OF THE PREFERRED EMBODIMENTS

In the following, embodiments of the present invention will be described.

(Light Extracting Surface)

The nitride-based semiconductor light-emitting device of the present invention is characterized in that a light extracting surface with an irregular surface is located above an n-type nitride-based semiconductor layer. When the light extracting surface is flat, of the light emitted from a light-emitting layer, the light incident on the light extracting surface at a normal angle, which is larger than critical refracting angle, is fully reflected at the light extracting surface. When the light extracting surface has irregularities, these light can also be extracted to outside, whereby light extraction efficiency can be improved.

In addition, when irregularities are formed on the upper surface of the p-type nitride-based semiconductor layer as in the conventional art, the p-type nitride-based semiconductor layer, which is high in resistance, is formed thick, to increase series resistance and driving voltage. When the light extracting surface is formed on the upper surface of the n-type nitride-based semiconductor layer, which is low in resistance, as in the present invention, even when the n-type nitride-based semiconductor layer is formed thick, the driving voltage of the device can be suppressed due to the conductivity of the n-type nitride-based semiconductor layer. In addition, even when a transparent electrode layer is provided on the n-type nitride-based semiconductor layer, electric resistance would not increase much, and the driving voltage of the device does not significantly differ from the driving voltage of a device without the transparent electrode layer.

Further, though the light extracting surface can be formed on the upper surface of the n-type nitride-based semiconductor layer, it is possible to form a high refractive index film composed of one selected from a group consisting of Si_3N_4, In_2O_3, Nd_2O_2, ZrO_2, TiO_2, CeO_2 and BiO_3 on the n-type nitride-based semiconductor layer and to use the upper surface of the high refractive index film as the light extracting surface. The high refractive index film has a smaller critical refractive index than the n-type nitride-based semiconductor layer, which allows the extraction of more light, whereby light extraction efficiency can be improved. In addition, as direct processing of the n-type nitride-based semiconductor layer is not necessary, the reduction of driving voltage of the device can be achieved to an extent equal to or more than in the case where the light extracting surface is the upper surface of the n-type nitride-based semiconductor layer.

Further, it is possible to form a nitride-based semiconductor layer represented by $In_aGa_{1-a}N$ ($0<a\leqq 1$) on the n-type nitride-based semiconductor layer to use the upper surface of the nitride-based semiconductor layer represented by $In_aGa_{1-a}N$ ($0<a\leqq 1$) as the light extracting surface. As the $In_aGa_{1-a}N$ layer has a smaller refractive index than the GaN layer, light extraction efficiency can be improved. Further, as the $In_aGa_{1-a}N$ layer has a lower crystallinity than the GaN layer, fabrication of the irregularities may be easier.

Here, the maximum thickness of the nitride-based semiconductor layer of $In_aGa_{1-a}N$ ($0<a\leqq 1$) is preferably in the range of 200~800 nm. Considering the facts that for the improvement of light extraction efficiency, the film thickness needs to be close to the wavelength of the light emitted from the light-emitting layer and that the dimension of irregularities needs to be larger than the wavelength of the emitted light divided by the refractive index in the nitride-based semiconductor layer, the maximum thickness of the layer is preferably in the range of 200~800 nm. When the maximum thickness of the layer is below 200 nm, total reflection becomes likely and the light extraction efficiency tends to decrease, whereas when the maximum thickness is above 800 nm, distortion caused by the regrowth of the layer leads to the generation of crack and leak current between n and p, and the light extraction efficiency tends to decrease.

Further, it is preferable that an Si-doped nitride-based semiconductor layer represented by $In_aGa_{1-a}N$ ($0<a\leqq 1$) is

formed on the n-type nitride-based semiconductor layer, that the upper surface of the Si-doped nitride-based semiconductor layer is the light extracting surface and that the concentration of Si contained in the Si-doped nitride-based semiconductor layer is in the range of 5×10^{20}~5×10^{21} cm^{-3}. In this case also light extraction efficiency may be improved. Further, when the Si concentration is in the range of 5×10^{20}~5×10^{21} cm^{-3} the light extracting surface can more easily be formed in a pyramid shape. When the Si concentration is below 5×10^{20} cm^{-3}, it is difficult to form pyramid-shaped irregularities and when the Si concentration is above 5×10^{21} cm^{-3}, crystal growth is difficult to occur and a film cannot always be formed.

In addition, a translucent electrode of one of metals selected from a group consisting of aluminium (Al), titanium (Ti), zirconium (Zr), hafnium (Hf), vanadium (V), niobium (Nb) and indium-tin oxide (ITO) can be provided on the light extracting surface with irregularities. In this case, current injected into the device can be spread more in the device.

(Irregularities)

Though the shape and the number of irregularities to be formed on the light extracting surface is not particularly limited, irregularities can take the following forms: a form where numerous holes like craters are formed on the light extracting surface; a form where the light extracting surface protrudes like a barrel roof; a form where triquetrous poles are horizontally arranged at an interval on the light extracting surface; and a form where a triquetrous poles are arranged without a gap therebetween on the light extracting surface.

As a method for fabricating the irregularities, the following methods can be employed, for example: a method of growing an n-type nitride-based semiconductor layer, and regrowing the n-type nitride-based semiconductor layer through adjustment of growth temperature, amount of gas introduction and growth rate as required; a method of forming a mask of SiO_2, Si_3N_4 and the like on the n-type nitride-based semiconductor layer and selectively regrowing the n-type nitride-based semiconductor layer; and a method of polishing the n-type nitride-based semiconductor layer using diamond grain or alumina grain.

Alternative methods of fabrication include, for example: a method of applying grains such as diamond grain or alumina grain and partially etching the n-type nitride-based semiconductor layer by RIE (reactive ion etching); and a method of performing a heat treatment on the n-type nitride-based semiconductor layer after the formation of mask pattern and vertically etching the mask by RIE. Further, when the mask is formed to leave unmasked portion in the shape of stripes with an approximately 1 μm width, it is possible to form irregular structure of tapers through an appropriate control of etching condition. Further, it is possible to form both the barrel roof shape light extracting surface and the tapered irregular structure through heat treatment as well as the control of etching condition. Here, taper means a V-shaped groove.

(Support Substrate)

The material employed for a support substrate of the present invention is not particularly limited. It is possible to form a support substrate from a metal plating such as Ni, Au, an alloyed metal consisting of Au and Sn, a semiconductor substrate of electrically conductive Si, GaAs, GaP, InP and the like which is fused by adhesive metal consisting of Pd and In. Particularly, the support substrate is preferably formed from Ni plating. Then, the support substrate can be fabricated at a low cost.

(Reflective Layer)

The reflective layer employed in the present invention is preferably formed from Ag which has the highest reflectivity in view of light extraction efficiency.

Further, in view of the reduction of the driving voltage of the device, the reflective layer is preferably a p-type-use electrode in ohmic contact with the p-type nitride-based semiconductor layer. Here, as the material for the reflective layer as the p-type-use electrode, for example, Pd, Ni, Ag and the like can be employed, among these Pd is preferable. With regard to the driving voltage, though these materials show little difference at the normally employed driving current of 20 mA, when Pd is employed the driving voltage of the device can be reduced, though not much.

Hence, more preferably the reflective layer is formed as a p-type-use electrode where Au is vapor deposited on Pd or a p-type-use electrode where Au is vapor deposited on Ag, and most preferably is a p-type-use electrode where Ag and Au are successively formed on Pd and which is capable of reflecting light.

(P-Type Nitride-Based Semiconductor Layer)

As a material for the p-type nitride-based semiconductor layer employed in the present invention, a product obtained by injecting a p-type dopant to a nitride-based semiconductor represented by the general formula $In_xAl_yGa_{1-x-y}N$ ($x+y+z=1$, $0\leqq x\leqq 1$, $0\leqq y\leqq 1$ and $0\leqq z\leqq 1$) is employed. As a p-type dopant, a conventionally known material can be employed, for example, one or more of Mg, Zn, Cd, Be or the like can be employed.

Here in the present invention, the p-type nitride-based semiconductor layer may mean one layer among a plurality of layered p-type layers or the plurality of layered p-type layers as a whole.

(Light-Emitting Layer)

As a material for the light-emitting layer employed in the present invention, a nitride-based semiconductor represented by the general formula $In_xAl_yGa_{1-x-y}N$ ($x+y+z=1$, $0\leqq x\leqq 1$, $0\leqq y\leqq 1$ and $0\leqq z\leqq 1$) can be used. In addition, the light-emitting layer employed in the present invention can be either an MQW (multiple quantum well) light-emitting layer or an SQW (single quantum well) light-emitting layer. The effects of the present invention can similarly be obtained when the light-emitting layer is formed as a group III–V element nitride-based semiconductor mainly containing N as a group V element, such as InGaAlN, InGaN, GaN, GaAsN, GaInAsN, GaPN, GaInPN.

(N-Type Nitride-Based Semiconductor Layer)

As a material for the n-type nitride-based semiconductor layer employed in the present invention, a product obtained by injecting an n-type dopant to a nitride-based semiconductor represented by the general formula $In_xAl_yGa_{1-x-y}N$ ($x+y+z=1$, $0\leqq x\leqq 1$, $0\leqq y\leqq 1$ and $0\leqq z\leqq 1$) is employed. Here, a conventionally known material can be used as the n-type dopant, for example, one or more of Si, oxygen (O), chlorine (Cl), sulfur (S), carbon (C), germanium (Ge) or the like can be employed.

In the present invention, the n-type nitride-based semiconductor layer may mean one layer of a plurality of n-type layers or the plurality of n-type layers as a whole.

(Manufacturing Method)

A method of manufacturing a nitride-based semiconductor light-emitting device of the present invention includes the steps of: preparing a silicon substrate and successively forming an n-type nitride-based semiconductor layer, a light-emitting layer, and a p-type nitride-based semiconductor layer on the silicon substrate; forming a reflective layer on the p-type nitride-based semiconductor layer and forming

a support substrate on the reflective layer; inverting a wafer using the support substrate; removing the silicon substrate; and forming a light extracting surface with irregularities on its surface above the n-type nitride-based semiconductor layer.

In the conventional art, irregularities are provided on the upper portion of the p-type nitride-based semiconductor layer. The present invention, however, is characterized in that the n-type nitride-based semiconductor layer, the light-emitting layer and the p-type nitride-based semiconductor layer are formed in this order on the Si substrate, then the support substrate is provided on the p-type nitride-based semiconductor layer to invert the wafer, and the Si substrate is removed to form the light extracting surface with irregularities on the n-type nitride-based semiconductor layer.

Hence, when the nitride-based semiconductor light-emitting device is fabricated according to the manufacturing method of the present invention, even if the film thickness of the n-type nitride-based semiconductor layer is increased for the formation of irregular surface of the n-type nitride-based semiconductor layer, the driving voltage of the device can be significantly reduced compared with the conventional art as described above. Further, as the support substrate also function as the substitute for the electrode, upper and lower electrodes structure of the light-emitting device can easily be fabricated, whereby more compact light-emitting device can easily be achieved.

For layering the nitride-based semiconductor layers, conventionally known methods can be employed, for example: Liquid Phase Epitaxy (LPE), Vapor Phase Epitaxy (VPE), Metal-Organic Chemical Vapor Deposition (MOCVD), Molecular Beam Epitaxy (MBE), Gas Source MBE, or the combination thereof. Further, as a method for forming the reflective layer, the support substrate or the electrode, the following can be employed, for example: vacuum evaporation, sputtering, electrolytic plating, electroless plating or the combination thereof.

EXAMPLE

In the following, the present invention will be described in detail in conjunction with embodiments, however, the present invention is not limited thereto.

(First Embodiment)

FIG. **1** shows a schematic perspective of the nitride-based semiconductor light-emitting device of the first embodiment of the present invention. The nitride-based semiconductor light-emitting device of the embodiment includes on a support substrate **11** of Ni plating functioning also as an electrode, a p-type-use electrode **12**, and further a p-type GaN clad layer **13**, a p-type AlGaInN carrier block layer **14**, a light-emitting layer **15** of $In_xGa_{1-x}N$, an Si-doped n-type $In_{0.03}Ga_{0.97}N$ clad layer **16**, an Si-doped n-type $In_{0.1}Ga_{0.9}N$ layer **17** and an Si-doped n-type GaN layer clad layer **18** successively formed on p-type-use electrode **12**. Further, an n-type GaN light extracting layer **19** having irregularities formed through regrowth is formed on an upper surface of n-type GaN clad layer **18** and an n-type-use electrode **110** and an n-type-use bonding electrode **111** are formed in a portion of n-type GaN light extracting layer **19**.

In the following, with reference to FIGS. **2** and **3**, the method of manufacturing the nitride-based semiconductor light-emitting device of the embodiment will be described. First, an Si (111) substrate **10** which is slightly cut off by about 1° is washed through organic cleaning and further with 5% HF solution for one minute, introduced into an MOCVD apparatus and cleaned at a high temperature of about 900° C. in the hydrogen (H_2) atmosphere.

Then, while H_2 as a carrier gas is being drawn into the apparatus at the rate of 10 L/min, at 1200° C. NH_3 at the rate of 5 L/min and trimethylaluminium (TMA) at the rate of 20 μmol/min are introduced into the apparatus to grow an AlN buffer layer **112** of 200 nm thickness on Si substrate **10** as shown in FIG. **2**.

Next, while H_2 as a carrier gas is being drawn into the apparatus at the rate of 10 L/min, at 1150° C. NH_3 at the rate of 5 L/min, TMA at the rate of 20 μmol/min, and trimethylgallium (TMG) at the rate of 20 μmol/min are introduced into the apparatus to grow an Si-doped $Al_{0.5}Ga_{0.5}N$ layer **113** of 150 nm in thickness.

Next, while H_2 as a carrier gas is being drawn into the apparatus at the rate of 10 L/min, at 1150° C. NH_3 at the rate of 5 L/min and TMG at the rate of 20 μmol/min are introduced into the apparatus and further SiH_4 gas is introduced, to grow Si-doped n-type GaN layer **18** of 1 μm in thickness.

Then, the growth temperature is decreased to 910° C. and TMG at the rate of 20 μmol/min and trimethylindium (TMI) at the rate of 20 μmol/min are introduced into the apparatus to grow Si-doped $In_{0.1}Ga_{0.9}N$ layer **17** of 300 nm in thickness.

Then, through the reduction of introduced amount of TMI into the apparatus down to approximately 5 μmol/min, Si-doped $In_{0.03}Ga_{0.97}N$ clad layer **16** of 20 nm in thickness is grown.

Then, the supply of SiH_4 is stopped, the substrate temperature is decreased down to 760° C. and TMI at the rate of 6.5 μmol/min and TMG at the rate of 2.8 μmol/min are introduced into the apparatus to grow a well layer of $In_{0.18}Ga_{0.82}N$ of 3 nm in thickness. Thereafter, the temperature is raised again up to 850° C. and TMG is introduced into the apparatus at the rate of 14 μmol/min to grow a barrier layer of GaN. Similarly, the growth of a well layer and a barrier layer is repeated to grow light-emitting layer **15** of InGaN of a multiple quantum well (MQW) including four pairs of well layer and barrier layer. Here, through the variation of composition x of $In_xGa_{1-x}N$ of the $In_xGa_{1-x}N$ light-emitting layer, the wavelength of interband light emission can be varied to emit the light ranging from ultraviolet to red. In this embodiment it is assumed that blue light is emitted.

After the completion of the growth of light-emitting layer **15**, at the same temperature as the last barrier layer, TMG at the rate of 11 μmol/min, TMA at the rate of 1.1 μmol/min, TMI at the rate of 40 μmol/min, and biscyclopentadienyl magnesium (Cp_2Mg) which is a p-type doping material gas at the rate of 10 nmol/min are introduced into the apparatus to grow Mg-doped p-type carrier block layer **14** of an $Al_{0.20}Ga_{0.75}In_{0.05}N$ layer of 50 nm in thickness. After the completion of the growth of p-type carrier block layer **14**, temperature is raised to 1000° C. and the introduction of TMA to the apparatus is stopped to grow Mg-doped p-type clad layer **13** of a GaN layer of 100 nm in thickness.

When the growth of the nitride-based semiconductor layer is completed as described above, the supply of TMG, Cp_2Mg and the like is stopped and the wafer is cooled down to room temperature and removed out of the MOCVD apparatus.

Next, after the vapor deposition of Pd to the thickness of 5 nm on p-type clad layer **13** as p-type-use electrode **12** with Electron Beam (EB) vapor deposition apparatus, Au is

deposited to 500 nm. Then, Ni plating of 100 μm is formed on p-type-use electrode **12** by electrolytic plating to provide support substrate **11**.

Then, as shown in FIG. **3**, the wafer is inverted using support substrate **11** and Si substrate **10** is removed through the etching with an etchant of HF and HNO_3 and AlN buffer layer **112** and $Al_{0.5}Ga_{0.5}N$ layer **113** are removed through RIE.

Then, the wafer without the Si substrate and other elements is set in the MOCVD apparatus and the surface of the wafer is cleaned through the removal of a damaged surface layer and oxidized layer at a high temperature of about 1000° C. in an H_2 atmosphere.

Then, while H_2 as a carrier gas is being drawn into the apparatus at the rate of 10 L/min, at 900° C. NH_3 at the rate of 5 L/min, TMG at the rate of 50 μmol/min and SiH_4 as Si dopant gas for n-type are each introduced into the apparatus, to grow light extracting layer **19** having an irregular structure of n-type GaN of 400 nm in the maximum thickness. At the temperature of 900° C., it is possible to fabricate light extracting layer **19** with irregular structure having numerous holes, through the increase in the growth speed of light extracting layer **19** or the decrease in the amount of NH_3 gas introduction.

On a portion of the wafer including nitride-based semiconductor layers having irregularities thus formed according to the technique as described above, n electrode **110** and bonding electrode **111** are formed. Finally, the wafer is cut into 300 μm×300 μm square by a dicing apparatus to give a finish to the nitride-based semiconductor light-emitting device of the embodiment.

As described above, on a high-workability Si substrate, nitride-based semiconductor layers are epitaxially grown and a high-reflectivity electrode is provided on the side of p-type GaN, then a wafer including these layers is inverted using support substrate **11**, and irregularities of the same nitride crystal are formed on the side of n-type GaN layer, whereby a nitride-based semiconductor light-emitting device with high light extraction efficiency and high brightness without unfavorable electric conductivity can be fabricated.

(Second Embodiment)

FIG. **4** shows a schematic perspective of a nitride-based semiconductor light-emitting device of the second embodiment of the present invention. The nitride-based semiconductor light-emitting device of the embodiment is characterized in that an Al translucent electrode layer **213** is formed through vapor deposition on an upper surface of n-type GaN light extracting layer **29** having irregularities.

The nitride-based semiconductor light-emitting device of the embodiment includes on a support substrate **21** of Ni plating functioning also as an electrode, a p-type-use electrode **22**, and further a p-type GaN clad layer **23**, a p-type AlGaInN carrier block layer **24**, an $In_xGa_{1-x}N$ light-emitting layer **25**, an Si-doped n-type $In_{0.03}Ga_{0.97}N$ clad layer **26**, an Si-doped n-type $In_{0.1}Ga_{0.9}N$ layer **27** and an Si-doped n-type GaN layer clad layer **28** successively formed on p-type-use electrode **22**. Further on n-type GaN clad layer **28**, an n-type GaN light extracting layer **29** is formed to have irregularities fabricated through the regrowth.

Further, in the nitride-based semiconductor light-emitting device of the second embodiment, a translucent electrode layer **213** of Al is formed through vapor deposition on an upper surface of n-type GaN light extracting layer **29** with irregularities and on a portion of the upper surface of translucent electrode layer **213** an n-type-use electrode **210**, an n-type-use bonding electrode **211** are formed. Also in the second embodiment, a nitride-based semiconductor light-emitting device with high light extraction efficiency, low driving voltage and high brightness can be manufactured. In other respects, the second embodiment is same as the first embodiment.

(Third Embodiment)

FIG. **5** shows a schematic perspective of a nitride-based semiconductor light-emitting device of the third embodiment of the present invention. The nitride-based semiconductor light-emitting device of the embodiment is characterized in that an SiO_2 mask **314** is formed above an upper surface of Si-doped n-type GaN layer clad layer **38** and that a pyramid-shaped light extracting surface **39***a* is formed in an n-type GaN light extracting layer **39** which is selectively grown.

The nitride-based semiconductor light-emitting device of the embodiment includes on a support substrate **31** of Ni plating functioning also as an electrode, a p-type-use electrode **32**, and further, a p-type GaN clad layer **33**, a p-type AlGaInN carrier block layer **34**, an $In_xGa_{1-x}N$ light-emitting layer **35**, an Si-doped n-type $In_{0.03}Ga_{0.97}N$ clad layer **36**, an Si-doped n-type $In_{0.1}Ga_{0.9}N$ layer **37** and an Si-doped n-type GaN layer clad layer **38** successively formed on p-type-use electrode **32**. Further on an upper surface of n-type GaN clad layer **38**, an n-type GaN light extracting layer **39** having irregularities fabricated through the regrowth is formed. On a portion of n-type GaN light extracting layer **39**, an n-type-use electrode **310**, an n-type-use bonding electrode **311** are formed. Further, above an upper surface of n-type GaN layer clad layer **38**, an SiO_2 mask **314** is formed and a pyramid-shaped light extracting surface **39***a* which is selectively formed is formed on n-type GaN light extracting layer **39**. In this embodiment as described above, a nitride-based semiconductor light-emitting device with high light extraction efficiency, low driving voltage, and high brightness can be manufactured. In other respects the third embodiment is same with the first embodiment.

(Fourth Embodiment)

FIG. **6** shows a schematic perspective of a nitride-based semiconductor light-emitting device of the fourth embodiment of the present invention. The nitride-based semiconductor light-emitting device of the fourth embodiment is characterized in that a barrel roof shaped light extracting surface **49***a* is formed on n-type GaN light extracting layer **49** and that there is a taper structure in the space between light extracting surfaces **49***a*.

The nitride-based semiconductor light-emitting device of the embodiment includes on a support substrate **41** of Ni plating functioning also as an electrode, a p-type-use electrode **42**, and further on p-type-use electrode **42**, a p-type GaN clad layer **43**, a p-type AlGaInN carrier block layer **44**, an $In_xGa_{1-x}N$ light-emitting layer **45**, an Si-doped n-type $In_{0.03}Ga_{0.97}N$ clad layer **46**, an Si-doped n-type $In_{0.1}Ga_{0.9}N$ layer **47** and an Si-doped n-type GaN layer clad layer **48** successively formed. Further, an n-type GaN light extracting layer **49** is formed on an upper surface of n-type GaN clad layer **48**. On a portion of n-type GaN light extracting layer **49**, an n-type-use electrode **410** and an n-type-use bonding electrode **411** are formed. Still further, a barrel roof shaped light extracting surface **49***a* is formed on n-type GaN light extracting layer **49** and that there is a taper structure in the space between light extracting surfaces **49***a*.

Barrel roof shaped light extracting surface **49***a* is fabricated as follows. First, a mask pattern of stripes of about 1 μm width is formed on n-type GaN light extracting surface **49**, then heat treatment at 180° C. is performed for 30 minutes to deform the mask pattern into a barrel roof shape.

Then, through a vertical etching with RIE, the barrel roof shape is projected onto n-type GaN light extracting layer **49** and barrel roof shaped light extracting surface **49***a* is fabricated. Also in the fourth embodiment, a nitride-based semiconductor light-emitting device with high light extraction efficiency, low driving voltage and high brightness can be manufactured. In other respects, the fourth embodiment is same as the first embodiment.

(Fifth Embodiment)

FIG. **7** shows a schematic perspective of a nitride-based semiconductor light-emitting device of the fifth embodiment of the present invention. The nitride-based semiconductor light-emitting device of the fifth embodiment is characterized in that n-type GaN light extracting layer **59** is formed in a prism shape.

The nitride-based semiconductor light-emitting device of the embodiment includes on a support substrate **51** of Ni plating functioning also as an electrode, a p-type-use electrode **52**, and further on p-type-use electrode **52**, a p-type GaN clad layer **53**, a p-type $Al_{0.20}Ga0.75In_{0.05}N$ carrier block layer **54**, a light-emitting layer **55** and an Si-doped n-type GaN layer clad layer **58** successively formed, and on an upper surface of n-type GaN clad layer **58** an n-type GaN light extracting layer **59** having irregularities fabricated through the regrowth is formed in a prism shape. On a portion of n-type GaN light extracting layer **59**, an n-type-use electrode **510** and an n-type-use bonding electrode **511** are formed.

In the following, the method of manufacturing the nitride-based semiconductor light-emitting device of the embodiment will be described. First, FIG. **8**A shows a relation between a (001) main surface **60** of Si substrate **20** and a (111) facet surface **61**, and FIG. **8**B and FIG. **8**C are a sectional view and a conceptual drawing, respectively, showing a relation between a (001) surface 7.3° off Si substrate **20** and the nitride semiconductor film having (111) facet surface **61** and a (1-101) facet surface **70**.

As FIGS. **8**A~**8**C show, a partial masking of SiO_2 **514** is provided onto Si substrate **20** rotating by 7.3° about a [01-1] axis from (001) main surface **60** or onto a surface off from this surface in an optional direction by degrees not more than 3°, and etching is performed on an opening where a mask of SiO_2 **514** is not applied. Then a groove with (111) facet surface **61** forming an angle of 62° with (001) main surface **60** is formed and on this surface a nitride-based semiconductor film is epitaxially grown to provide a GaN-based semiconductor film having a facet surface **70** as a growth surface.

Si substrate **20** employed here has a main surface **60** which is tilted in [0-1-1] direction by 7.3° from (001) main surface **60**, in other words, a main surface **60** rotating by 7.3° about [01-1] axis from (001) main surface **60**. Hence, (1-101) facet surface **70** has nearly the same surface direction with main surface **60** of Si substrate **20**. When there is a tilt not more than 3° in an optional direction from this surface, a fairly flat surface including (1-101) surface can be obtained.

Then, in the order of FIG. **9**A, FIG. **9**B, FIG. **9**C and FIG. **9**D, a crystal growth of a nitride-based semiconductor film is proceeded only on the groove, nitride-based semiconductor layers are formed successively and further a p-type electrode **52** and Ni plating **51** as a support substrate are formed thereon. Then Si substrate **20** is removed to finish the nitride-based semiconductor light-emitting device of the embodiment using the light extracting surface with prism-shape irregularities formed with (111) facet surface **61** of Si substrate **20**.

In the following, detailed description will be given. First, Si substrate as described above is cleaned and SiO_2 mask **514** of 100 nm is deposited thereon as shown in FIG. **10**A by sputtering or CVD. By photolithography, SiO_2 mask **514** is partially removed in stripe-shape. Then through the process such as acid etching using, for example, buffered hydrofluoric acid, on wafer, a groove with (111) facet surface **61** is formed as shown in FIG. **10**B. The groove is of stripe shape and extends in [01-1] direction of Si substrate **20**. Here, the angle formed by main surface **60** of Si substrate **20** and (111) facet surface **61** is about 62°. Then, as shown in FIG. **10**C, on an opposite surface of (111) facet surface **61**, SiO_2 mask **514***a* is formed.

Next, through MOCVD (metal-organic chemical vapor deposition) on facet surface **61** of Si substrate **20**, the nitride semiconductor film is grown under the following growth conditions. The following is the detailed description.

First, silicon substrate **20** with grooves formed through the process as described above is introduced into a MOCVD apparatus and cleaned at a high temperature of approximately 1100° C. in an atmosphere of H_2.

Then, while H_2 as a carrier gas is being drawn into the apparatus at the rate of 10 L/min, at 800° C. NH_3 at the rate of 5 L/min and TMA at the rate of 10 μmol/min are introduced into the apparatus to grow an AlN buffer layer **120** of about 50 nm in thickness as shown in FIG. **11**A, and then at the same temperature, the supply of TMA is stopped and TMG at the rate of about 20 μmol/min and SiH_4 gas at the rate of 0.05 μmol/min are introduced into the apparatus to grow Si-doped n-type GaN clad layer **58** of about 3 μm in thickness.

Then, the supply of TMA, TMI, TMG and SiH_4 is stopped, the substrate temperature is decreased down to 760° C., TMI at the rate of 6.5 μmol/min and TMG at the rate of 2.8 μmol/min are introduced into the apparatus to grow a well layer of $In_{0.18}Ga_{0.82}N$ of 3 nm in thickness. Then again the temperature is raised up to 850° C. and TMG is introduced into the apparatus at the rate of 14 μmol/min to grow a barrier layer of GaN. Similarly the growth of well layer and barrier layer is repeated to grow a light-emitting layer **55** of multiple quantum well (MQW) including four pairs of well layer and barrier layer as shown in FIG. **11**B.

After the completion of the growth of the light-emitting layer, at the same temperature as the last barrier layer, TMG at the rate of 11 μmol/min, TMA at the rate of 1.1 μmol/min, TMI at the rate of 40 μmol/min and Cp_2Mg at the rate of 10 nmol/min are introduced into the apparatus to grow a p-type $Al_{0.20}Ga_{0.75}In_{0.05}N$ carrier block layer **54** of 50 nm in thickness. Next, after the completion of the growth of p-type $Al_{0.20}Ga_{0.75}In_{0.05}N$ carrier block layer **54**, the supply of TMA is stopped at the same temperature and p-type $In_{0.1}Ga_{0.9}N$ clad layer **53** is grown and the growth of these nitride-based semiconductor layers is finished at the stage shown in FIG. **11**C. Thereafter, the supply of TMG, TMI and Cp_2Mg is stopped, the temperature is cooled down to room temperature, and the wafer including these nitride-based semiconductor layers is removed out of the MOCVD apparatus.

Under the growth conditions as described above, on the nitride-based semiconductor layers fabricated on Si substrate **20**, p-type-use electrode **52** of 100 nm in thickness is vapor deposited by Electron Beam (EB) vapor deposition apparatus. On p-type-use electrode **52**, Ni plating is performed to 100 μm to provide a support substrate **51** as shown in FIG. **11**D.

Sequentially, Si substrate **20** on the side of n-type GaN clad layer **58** is removed through the etching with hydrof-

luoric acid-based etchant, and further, to increase the conductivity on the side of n-type-GaN, low crystallinity layer adjacent to an interface of Si substrate and AlN buffer layer **120** are removed with an RIE apparatus to form a prism shaped light extracting layer **59**. Finally on light extracting layer **59**, n electrode **510** and bonding electrode **511** are partially formed and the obtained wafer is divided into 300 μm square pieces. Also in the fifth embodiment, a nitride-based semiconductor light-emitting device with high light extraction efficiency, low driving voltage and high brightness can be manufactured.

(First Comparison)

In the configuration of the nitride-based semiconductor light-emitting device of the first embodiment, light extracting surface **19** is not formed and an n-type-use electrode **110** is directly provided on n-type GaN layer clad layer **18** to provide a nitride-based semiconductor light-emitting device of the first comparison.

(Second Comparison)

In the configuration of the nitride-based semiconductor light-emitting device of the first embodiment, n-type and p-type are exchanged to provide a nitride-based semiconductor light-emitting device of the second comparison.

(Measurement Results)

Measurements are performed on the driving voltages and the light extraction efficiency of the nitride-based semiconductor light-emitting devices of first to fifth embodiments and first to second comparisons. The table below shows the measurement results of the nitride-based semiconductor light-emitting devices of first to fifth embodiments and first to second comparisons.

TABLE 1

	Embodiments					Comparisons	
	1	2	3	4	5	1	2
Driving Voltage (V)	3.5	3.5	3.5	3.5	3.5	3.5	4.5
Light Extraction Efficiency (mW)	2.0	2.0	2.0	2.0	2.0	1.5	2.0

As can be seen from Table 1, the nitride-based semiconductor light-emitting devices of first to fifth embodiments are equal to the nitride-based semiconductor light-emitting device of the first comparison in driving voltage, which is 3.5V. However, the light extraction efficiency of the nitride-based semiconductor light-emitting devices of first to fifth embodiments is 2.0 mW whereas the light extraction efficiency of the nitride-based semiconductor light-emitting device of the first comparison is 1.5 mW. Thus, the nitride-based semiconductor light-emitting devices of first to fifth embodiments are superior to the nitride-based semiconductor light-emitting device of the first comparison in light extraction efficiency.

In addition, the driving voltage of the nitride-based semiconductor light-emitting devices of first to fifth embodiments is 3.5V whereas the driving voltage of the nitride-based semiconductor light-emitting device of the second comparison is 4.5V, which means that the nitride-based semiconductor light-emitting devices of first to fifth embodiments can decrease the driving voltage compared with the nitride-based semiconductor light-emitting device of the second comparison.

In the present invention as described above, on the Si substrate with high workability, nitride-based semiconductor layers are epitaxially grown and a high reflectivity electrode is provided on the side of the p-type nitride-based semiconductor layer. Then the wafer is inverted with the use of the support substrate and irregularities are provided on the side of the high conductivity n-type nitride-based semiconductor layer, whereby the nitride-based semiconductor light-emitting device with low driving voltage, high light extraction efficiency and high brightness can be manufactured.

Although the present invention has been described and illustrated in detail, it is clearly understood that the same is by way of illustration and example only and is not to be taken by way of limitation, the spirit and scope of the present invention being limited only by the terms of the appended claims.

What is claimed is:

1. A nitride-based semiconductor light-emitting device comprising:

a reflective layer formed on a support substrate;

a p-type nitride-based semiconductor layer, a light-emitting layer and an n-type nitride-based semiconductor layer successively formed on the reflective layer;

wherein

a light extracting surface located above said n-type nitride-based semiconductor layer has irregularities; and

a high refractive index film including one selected from a group consisting of silicon nitride, indium oxide, neodymium oxide, zirconium oxide, titanium oxide, cerium oxide and bismuth oxide is formed on said n-type nitride-based semiconductor layer, and an upper surface of said high refractive index film is said light extracting surface.

2. A nitride-based semiconductor light-emitting device according to claim **1**, wherein

said support substrate is formed by one of nickel provided by nickel plating, a metal provided by metal plating, Au, an alloy of Au and Sn, and an electrically-conductive semiconductor.

3. A nitride-based semiconductor light-emitting device according to claim **1**, further comprising

a translucent electrode formed on said light extracting surface, wherein said electrode is formed of a metal selected from a group consisting of aluminum, titanium, zirconium, hafnium, vanadium, niobium, and indium-tin oxide.

* * * * *