US007938184B2

(12) **United States Patent**
Yeh et al.

(10) **Patent No.: US 7,938,184 B2**
(45) **Date of Patent: May 10, 2011**

(54) **WELLBORE METHOD AND APPARATUS FOR COMPLETION, PRODUCTION AND INJECTION**

(75) Inventors: **Charles S. Yeh**, Spring, TX (US); **David C. Haeberle**, Cypress, TX (US); **Michael D. Barry**, The Woodlands, TX (US); **Michael T. Hecker**, Tomball, TX (US); **Jon Blacklock**, Katy, TX (US); **Ted A. Long**, Sugar Land, TX (US); **Hans Brekken**, Algard (NO); **Arthur H. Dybevik**, Sandnes (NO); **Lars Faret**, Sandnes (NO); **Ole Sveinung Kvernstuen**, Sandnes (NO); **Terje Moen**, Sandnes (NO); **Knut H. Nesland**, Algard (NO); **Kjartan Roaldsnes**, Kvernaland (NO)

(73) Assignee: **ExxonMobil Upstream Research Company**, Houston, TX (US)

(*) Notice: Subject to any disclaimer, the term of this patent is extended or adjusted under 35 U.S.C. 154(b) by 355 days.

(21) Appl. No.: **11/983,447**

(22) Filed: **Nov. 9, 2007**

(65) **Prior Publication Data**

US 2008/0142227 A1 Jun. 19, 2008

Related U.S. Application Data

(60) Provisional application No. 60/589,229, filed on Nov. 15, 2006.

(51) **Int. Cl.**
E21B 43/04 (2006.01)
E21B 17/02 (2006.01)

(52) **U.S. Cl.** **166/278**; 166/51; 166/242.3

(58) **Field of Classification Search** 166/278, 166/51, 242.3

See application file for complete search history.

(56) **References Cited**

U.S. PATENT DOCUMENTS

2,018,283	A	*	10/1935	Schweitzer et al.	166/278
2,443,944	A	*	6/1948	Bean	285/96
3,638,970	A	*	2/1972	Sandquist et al.	285/24
3,826,134	A	*	7/1974	Miller	73/152.35
3,827,728	A	*	8/1974	Hynes	285/90
4,018,275	A	*	4/1977	Gaut	166/137
4,510,996	A	*	4/1985	Hardin	166/227
4,945,991	A		8/1990	Jones	
5,082,052	A		1/1992	Jones et al.	

(Continued)

FOREIGN PATENT DOCUMENTS

EP 1 160 417 A2 12/2001

(Continued)

OTHER PUBLICATIONS

European Search Report No. 115377, dated Jul. 10, 2007, 4 pages.

(Continued)

Primary Examiner — Jennifer H Gay

(57) **ABSTRACT**

A method and system associated with the production of hydrocarbons comprising a joint assembly comprising a main body portion having primary and secondary fluid flow paths, wherein the main body portion is attached to a load sleeve assembly at one end and a torque sleeve assembly at the opposite end. The load sleeve may include at least one transport conduit and at least one packing conduit. The main body portion may include a sand control device, a packer, or other well tool for use in a downhole environment. Included is a coupling assembly having a manifold region in fluid flow communication with the second fluid flow path of the main body portion and facilitating the make-up of first and second joint assemblies with a single connection.

58 Claims, 8 Drawing Sheets

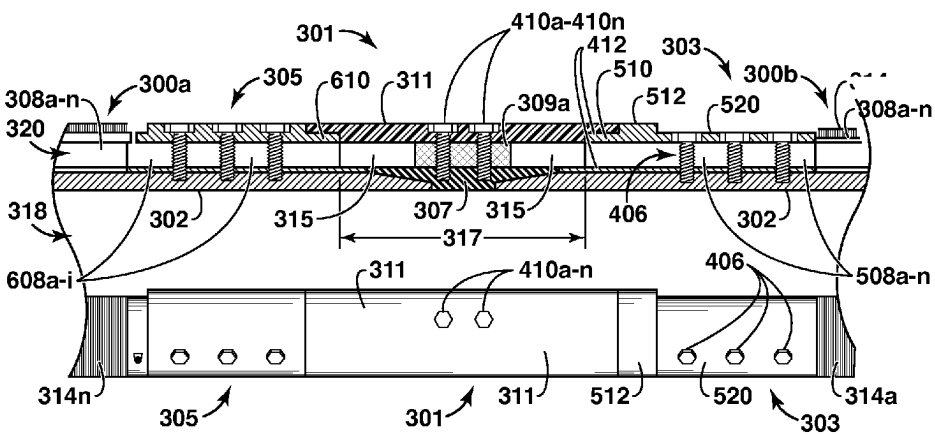

U.S. PATENT DOCUMENTS

5,113,935	A	5/1992	Jones et al.	
5,333,688	A	8/1994	Jones et al.	
5,375,662	A	12/1994	Echols, III et al.	
5,396,954	A	3/1995	Brooks	
5,413,180	A	5/1995	Ross et al.	
5,476,143	A	12/1995	Sparlin et al.	
5,515,915	A	5/1996	Jones et al.	
5,588,487	A	12/1996	Bryant	
5,829,520	A *	11/1998	Johnson	166/250.01
5,842,516	A *	12/1998	Jones	166/56
5,868,200	A	2/1999	Bryant et al.	
5,890,533	A	4/1999	Jones	
5,934,376	A	8/1999	Nguyen et al.	
6,059,032	A	5/2000	Jones	
6,227,303	B1	5/2001	Jones	
6,298,916	B1	10/2001	Tibbles et al.	
6,405,800	B1 *	6/2002	Walker et al.	166/278
6,409,219	B1	6/2002	Broome et al.	
6,464,261	B1	10/2002	Dybevik et al.	
6,481,494	B1 *	11/2002	Dusterhoft et al.	166/51
6,505,682	B2	1/2003	Brockman	
6,513,599	B1	2/2003	Bixenman et al.	
6,516,881	B2 *	2/2003	Hailey, Jr.	166/278
6,516,882	B2	2/2003	McGregor et al.	
6,557,634	B2	5/2003	Hailey, Jr. et al.	
6,575,251	B2	6/2003	Watson et al.	
6,581,689	B2 *	6/2003	Hailey, Jr.	166/278
6,588,506	B2	7/2003	Jones	
6,666,274	B2	12/2003	Hughes	
6,695,067	B2	2/2004	Johnson et al.	
6,749,023	B2	6/2004	Nguyen et al.	
6,749,024	B2	6/2004	Bixenman	
6,752,207	B2	6/2004	Danos et al.	
6,755,245	B2	6/2004	Nguyen et al.	
6,789,624	B2	9/2004	McGregor et al.	
6,814,139	B2	11/2004	Hejl et al.	
6,817,410	B2	11/2004	Wetzel et al.	
6,843,480	B2 *	1/2005	Nelson et al.	277/338
6,883,608	B2	4/2005	Parlar et al.	
6,923,262	B2	8/2005	Broome et al.	
6,983,796	B2	1/2006	Bayne et al.	
6,986,390	B2	1/2006	Doane et al.	
7,048,061	B2	5/2006	Bode et al.	
7,100,691	B2	9/2006	Nguyen et al.	
7,104,324	B2	9/2006	Wetzel et al.	
7,147,054	B2	12/2006	Wang et al.	
7,152,677	B2	12/2006	Parlar et al.	
7,207,383	B2	4/2007	Hurst et al.	
7,222,676	B2 *	5/2007	Patel et al.	166/378
7,243,715	B2	7/2007	Wang et al.	
7,243,723	B2	7/2007	Surjaatmadja et al.	
7,243,724	B2	7/2007	McGregor et al.	
7,243,732	B2	7/2007	Richard	
7,264,061	B2	9/2007	Dybevik et al.	
7,278,479	B2	10/2007	Kvernstuen et al.	
7,343,983	B2	3/2008	Livingstone	
7,363,974	B2	4/2008	Wang et al.	
7,370,700	B2	5/2008	Hurst et al.	
7,407,007	B2	8/2008	Tibbles	
7,426,962	B2	9/2008	Moen et al.	
7,431,058	B2	10/2008	Holting	
7,431,085	B2	10/2008	Coronado et al.	
7,441,605	B2	10/2008	Coronado et al.	
7,493,959	B2	2/2009	Johnson et al.	
7,562,709	B2	7/2009	Saebi et al.	
7,584,799	B2	9/2009	Coronado et al.	
7,591,321	B2	9/2009	Whitsitt et al.	
7,597,141	B2	10/2009	Rouse et al.	
7,661,476	B2 *	2/2010	Yeh et al.	166/278
2002/0007948	A1 *	1/2002	Bayne et al.	166/278
2002/0174984	A1	11/2002	Jones	
2003/0000700	A1 *	1/2003	Hailey, Jr.	166/278
2003/0173075	A1	9/2003	Morvant et al.	
2004/0003922	A1	1/2004	Bayne et al.	
2004/0074641	A1	4/2004	Hejl et al.	
2004/0140089	A1 *	7/2004	Gunneroed	166/228
2005/0028977	A1	2/2005	Ward	
2005/0061501	A1	3/2005	Ward et al.	
2005/0082060	A1	4/2005	Ward et al.	
2005/0205269	A1	9/2005	Kilgore et al.	
2005/0284637	A1 *	12/2005	Stegent et al.	166/308.1
2005/0284643	A1	12/2005	Setterberg, Jr.	
2007/0068675	A1 *	3/2007	Barry et al.	166/278
2008/0128129	A1 *	6/2008	Yeh et al.	166/275
2008/0142227	A1 *	6/2008	Yeh et al.	166/369
2009/0008092	A1 *	1/2009	Haeberle et al.	166/278
2009/0283279	A1	11/2009	Patel et al.	
2010/0032158	A1 *	2/2010	Dale et al.	166/278
2010/0065284	A1	3/2010	Freyer	
2010/0139919	A1 *	6/2010	Yeh et al.	166/278
2010/0236779	A1 *	9/2010	Nutley et al.	166/278

FOREIGN PATENT DOCUMENTS

FR	2 762 356	A1	10/1998
RU	2 160 360	C2	12/2000
WO	WO 99/49257	A1	9/1999
WO	WO 00/45031	A1	8/2000
WO	WO 02/097237	A1	12/2002
WO	WO 2004/079145	A2	9/2004
WO	WO 2004/079145	A3	9/2004
WO	WO 2004/094769	A2	11/2004
WO	WO 2004/094769	A3	11/2004
WO	WO 2004/094784	A2	11/2004
WO	WO 2004/094784	A3	11/2004

OTHER PUBLICATIONS

Hurst, G. et al., "Alternate Path Completions: A Critical Review and Lessons Learned From Case Histories With Recommended Practices for Deepwater Applications", SPE 86532, SPE International Symposium and Exhibition on Formation Damage Control, Feb. 18-20, 2004, pp. 1-14, Lafayette, LA.

* cited by examiner

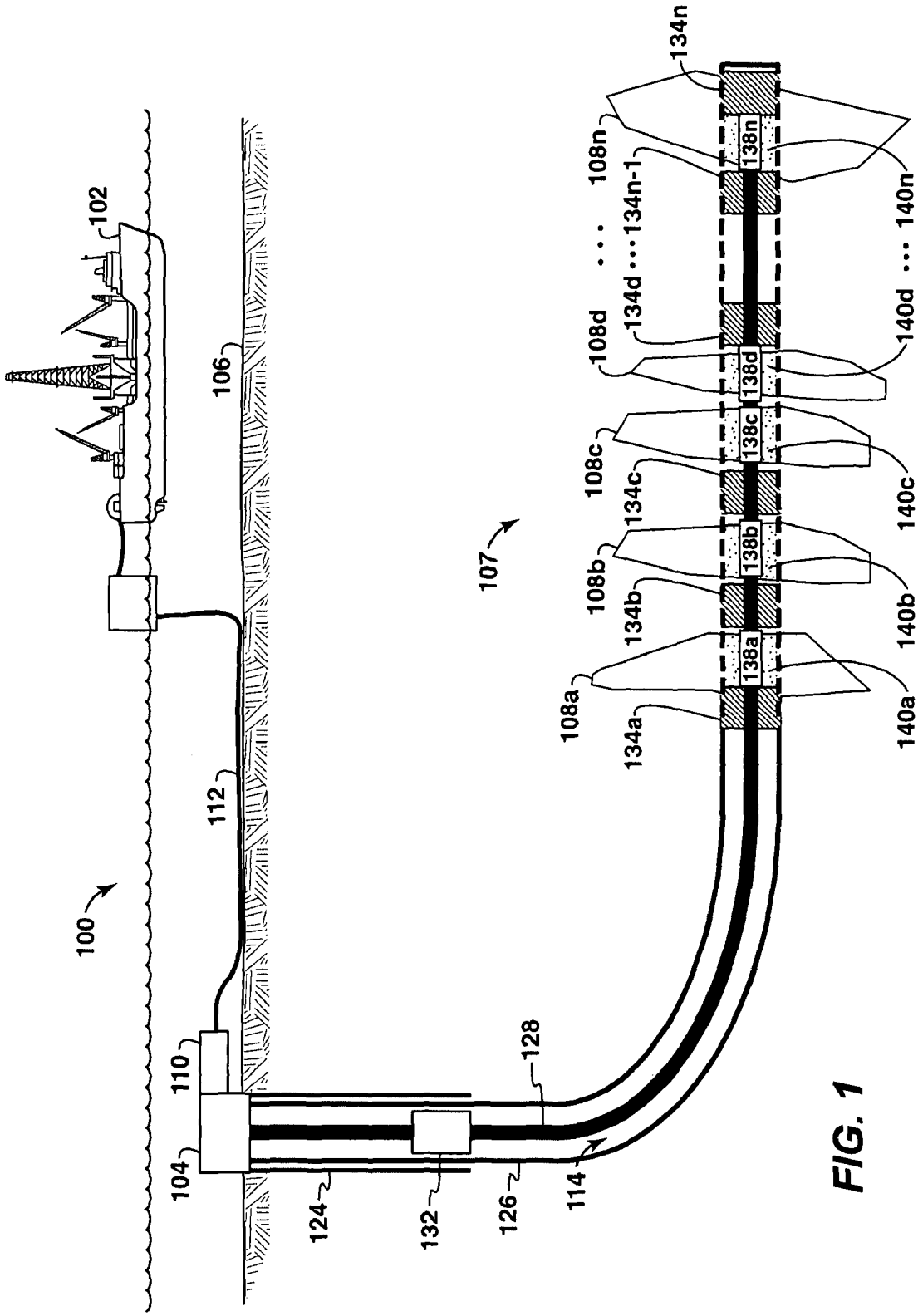
100
102
104
106
107
108a
108b
108c
108d
108n
110
112
114
124
126
128
132
134a
134b
134c
134d
134n-1
134n
138a
138b
138c
138d
138n
140a
140b
140c
140d
140n

FIG. 1

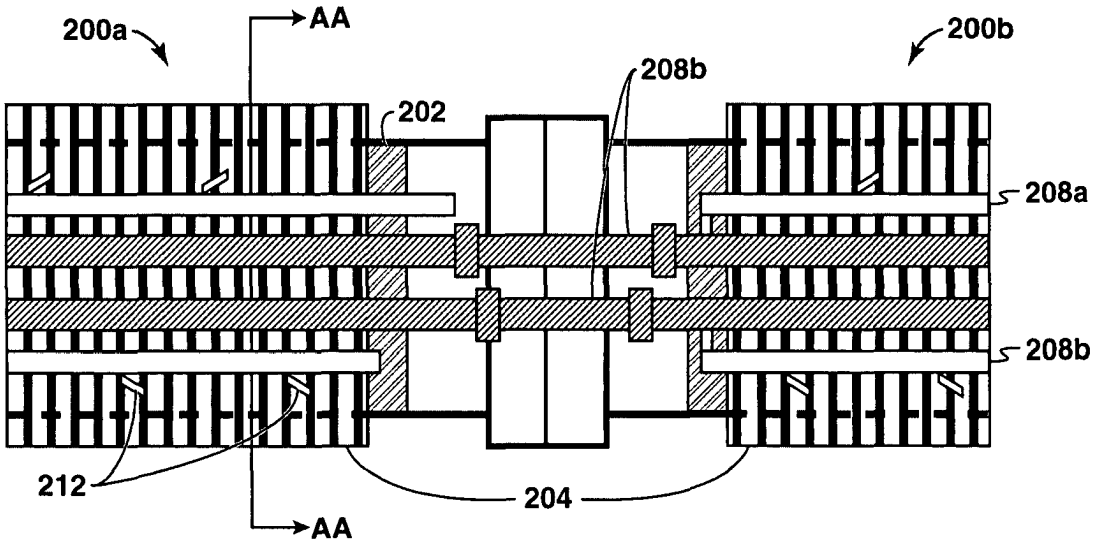
200a
AA
200b
208b
202
208a
208b
212
204
AA

FIG. 2A

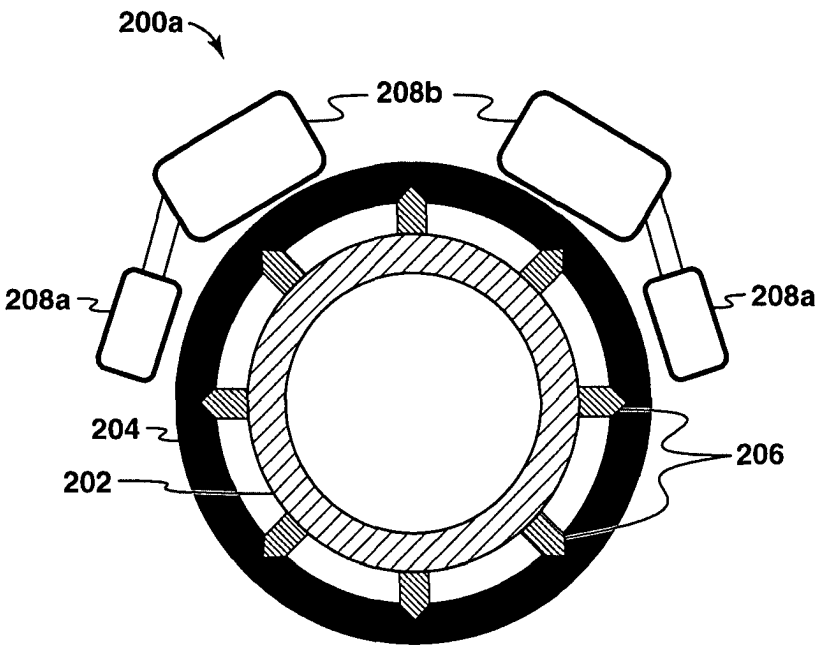
200a
208b
208a
208a
204
206
202

FIG. 2B

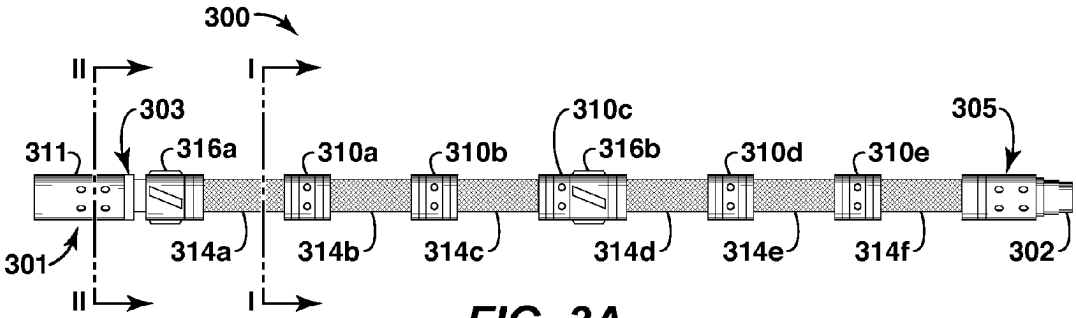

FIG. 3A

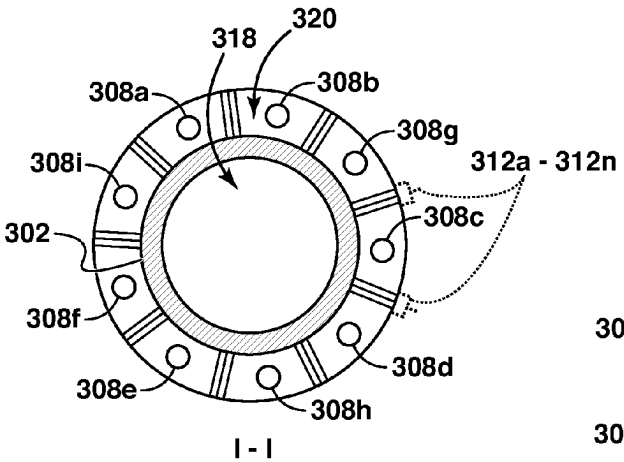

FIG. 3B

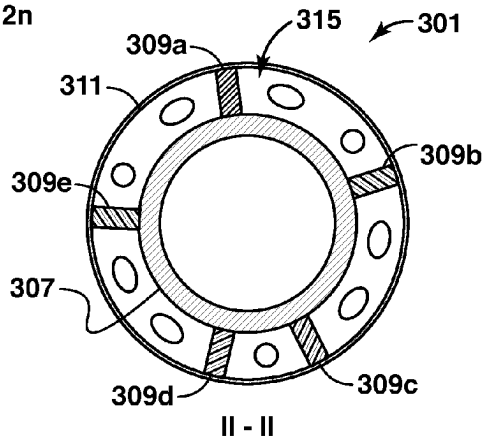

FIG. 3C

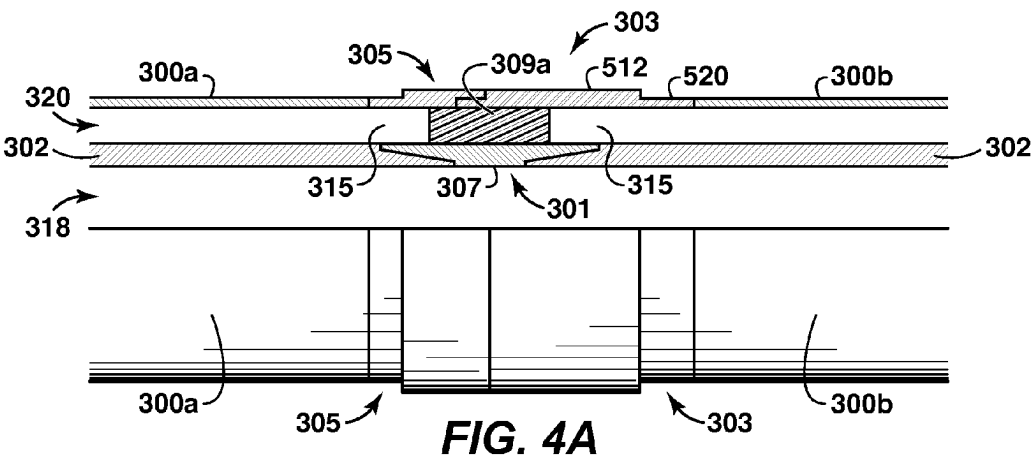

FIG. 4A

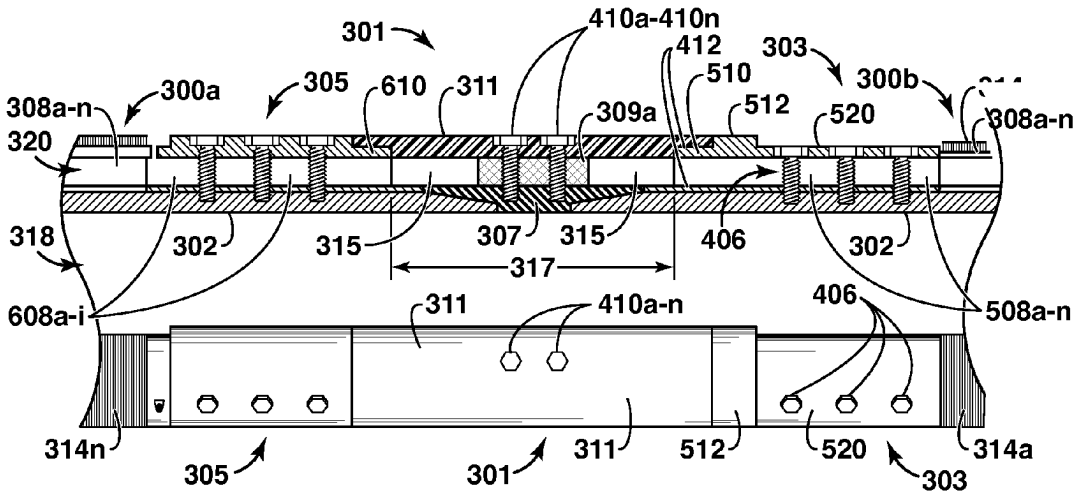

FIG. 4B

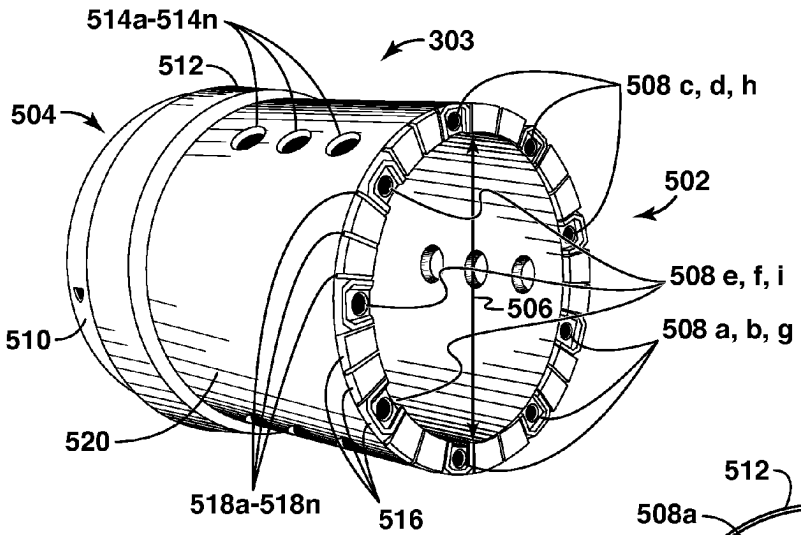

FIG. 5A

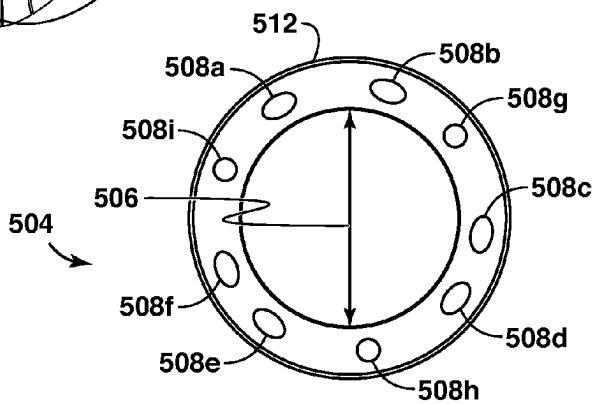

FIG. 5B

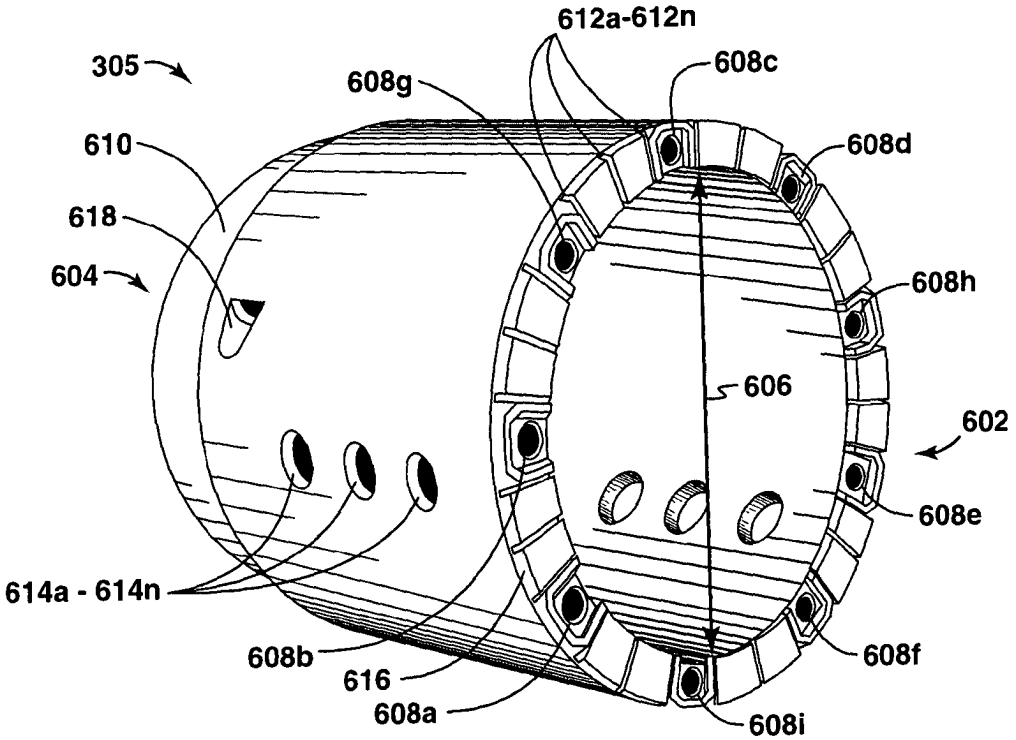
612a-612n
305
608g
608c
610
608d
618
604
608h
606
602
608e
614a - 614n
608b
616
608a
608f
608i

FIG. 6

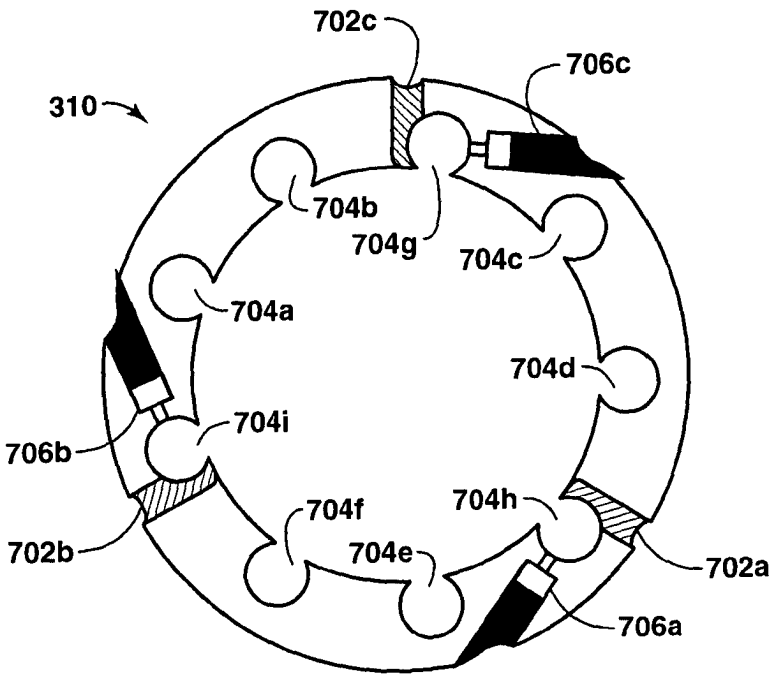
702c
706c
310
704b
704g
704c
704a
704d
704i
706b
704f
704h
702b
704e
702a
706a

FIG. 7

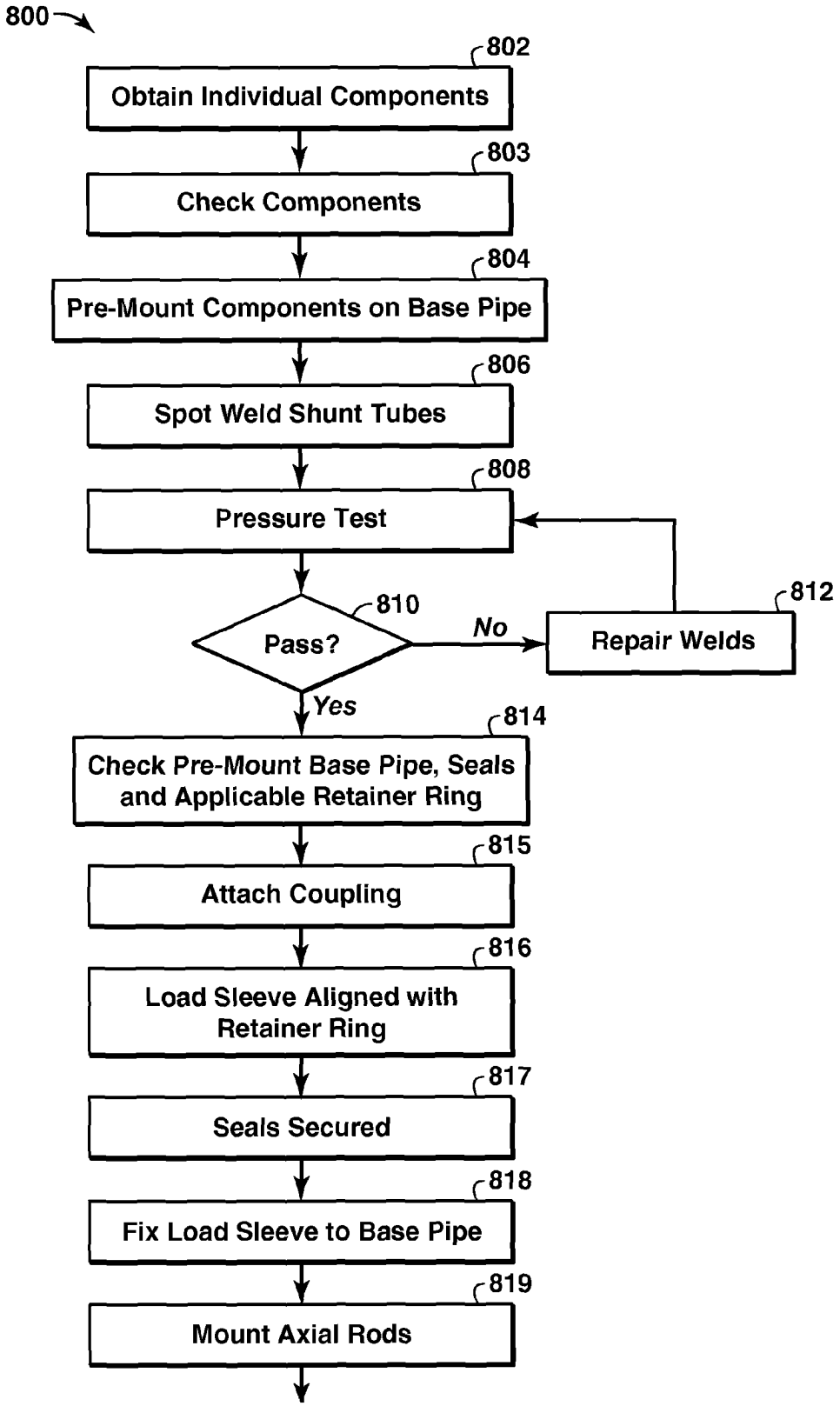
800
802
Obtain Individual Components
803
Check Components
804
Pre-Mount Components on Base Pipe
806
Spot Weld Shunt Tubes
808
Pressure Test
810
Pass?
No
812
Repair Welds
Yes
814
Check Pre-Mount Base Pipe, Seals and Applicable Retainer Ring
815
Attach Coupling
816
Load Sleeve Aligned with Retainer Ring
817
Seals Secured
818
Fix Load Sleeve to Base Pipe
819
Mount Axial Rods

FIG. 8A

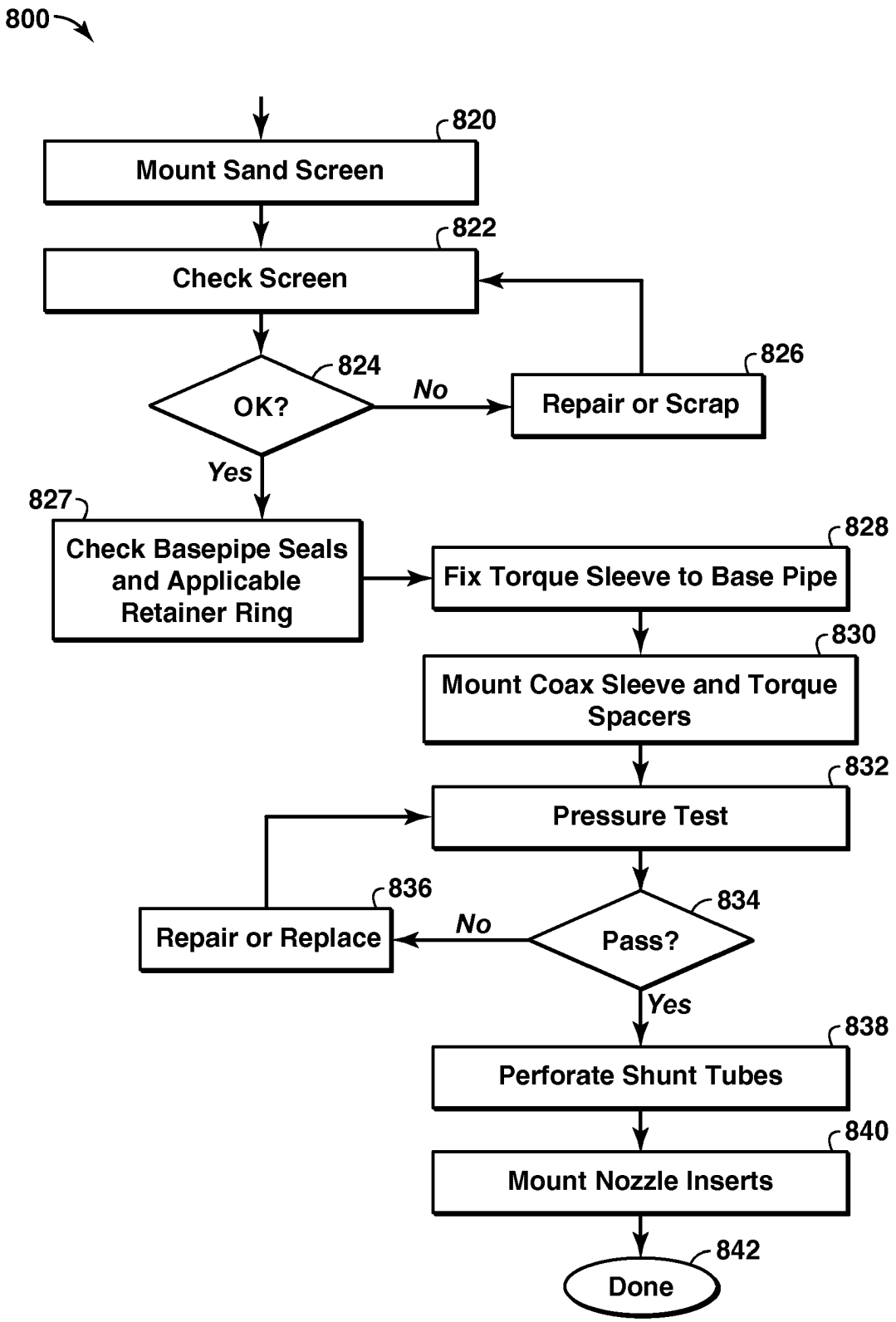
800
820
Mount Sand Screen
822
Check Screen
824
OK?
No
826
Repair or Scrap
Yes
827
Check Basepipe Seals and Applicable Retainer Ring
828
Fix Torque Sleeve to Base Pipe
830
Mount Coax Sleeve and Torque Spacers
832
Pressure Test
836
Repair or Replace
No
834
Pass?
Yes
838
Perforate Shunt Tubes
840
Mount Nozzle Inserts
842
Done

FIG. 8B

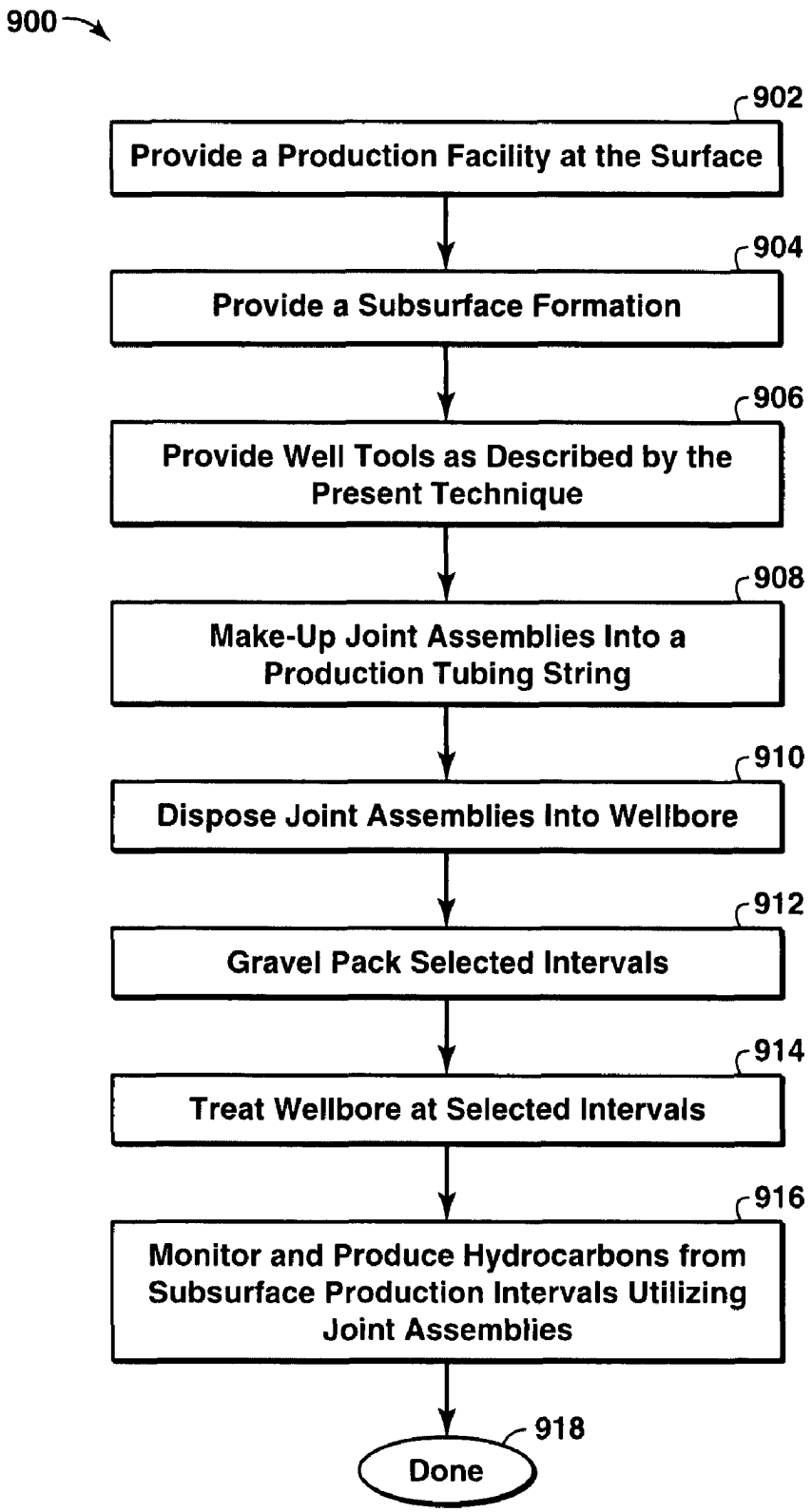
900
902
Provide a Production Facility at the Surface
904
Provide a Subsurface Formation
906
Provide Well Tools as Described by the Present Technique
908
Make-Up Joint Assemblies Into a Production Tubing String
910
Dispose Joint Assemblies Into Wellbore
912
Gravel Pack Selected Intervals
914
Treat Wellbore at Selected Intervals
916
Monitor and Produce Hydrocarbons from Subsurface Production Intervals Utilizing Joint Assemblies
918
Done

FIG. 9

WELLBORE METHOD AND APPARATUS FOR COMPLETION, PRODUCTION AND INJECTION

CROSS REFERENCE TO RELATED APPLICATIONS

This application claims the benefit of U.S. Provisional Application No. 60/859,229, filed 15 Nov. 2006.

This application contains subject matter related to U.S. patent application Ser. No. 11/983,445, filed 9 Nov. 2007, entitled "Gravel Packing Methods"; and International Patent Application Serial number PCT/US2007/023672, entitled "Wellbore Method and Apparatus for Completion, Production and Injection", filed 9 Nov. 2007 which claims priority to U.S. Provisional Application Ser. No. 60/859,229 filed 15 Nov. 2006, ("Related Applications"). This application is commonly owned with the Related Applications and shares at least one common inventor.

FIELD OF THE INVENTION

This invention relates generally to an apparatus and method for use in wellbores and associated with the production of hydrocarbons. More particularly, this invention relates to a joint assembly and related system and method for coupling joint assemblies including wellbore tools.

BACKGROUND

This section is intended to introduce various aspects of the art, which may be associated with exemplary embodiments of the present techniques. This discussion is believed to assist in providing a framework to facilitate a better understanding of particular aspects of the present techniques. Accordingly, it should be understood that this section should be read in this light, and not necessarily as admissions of prior art.

The production of hydrocarbons, such as oil and gas, has been performed for numerous years. To produce these hydrocarbons, a production system may utilize various devices, such as sand screens and other tools, for specific tasks within a well. Typically, these devices are placed into a wellbore completed in either a cased-hole or open-hole completion. In cased-hole completions, a casing string is placed in the wellbore and perforations are made through the casing string into subterranean formations to provide a flow path for formation fluids, such as hydrocarbons, into the wellbore. Alternatively, in open-hole completions, a production string is positioned inside the wellbore without a casing string. The formation fluids flow through the annulus between the subsurface formation and the production string to enter the production string.

However, when producing hydrocarbons from some subterranean formations, it becomes more challenging because of the location of certain subterranean formations. For example, some subterranean formations are located in ultra-deep water, at depths that extend the reach of drilling operations, in high pressure/temperature reservoirs, in long intervals, in formations with high production rates, and at remote locations. As such, the location of the subterranean formation may present problems that increase the individual well cost dramatically. That is, the cost of accessing the subterranean formation may result in fewer wells being completed for an economical field development. Further, loss of sand control may result in sand production at surface, downhole equipment damage, reduced well productivity and/or loss of the well. Accordingly, well reliability and longevity become

design considerations to avoid undesired production loss and expensive intervention or workovers for these wells.

Typically, sand control devices are utilized within a well to manage the production of solid material, such as sand. The sand control device may have slotted openings or may be wrapped by a screen. As an example, when producing formation fluids from subterranean formations located in deep water, it is possible to produce solid material along with the formation fluids because the formations are poorly consolidated or the formations are weakened by downhole stress due to wellbore excavation and formation fluid withdrawal. Accordingly, sand control devices, which are usually installed downhole across these formations to retain solid material, allow formation fluids to be produced without the solid materials above a certain size.

However, under the harsh environment in a wellbore, sand control devices are susceptible to damage due to high stress, erosion, plugging, compaction/subsidence, etc. As a result, sand control devices are generally utilized with other methods to manage the production of sand from the subterranean formation.

One of the most commonly used methods to control sand is a gravel pack. Gravel packing a well involves placing gravel or other particulate matter around a sand control device coupled to the production string. For instance, in an open-hole completion, a gravel pack is typically positioned between the wall of the wellbore and a sand screen that surrounds a perforated base pipe. Alternatively, in a cased-hole completion, a gravel pack is positioned between a perforated casing string and a sand screen that surrounds a perforated base pipe. Regardless of the completion type, formation fluids flow from the subterranean formation into the production string through the gravel pack and sand control device.

During gravel packing operations, inadvertent loss of a carrier fluid may form sand bridges within the interval to be gravel packed. For example, in a thick or inclined production interval, a poor distribution of gravel (i.e. incomplete packing of the interval resulting in voids in the gravel pack) may occur with a premature loss of liquid from the gravel slurry into the formation. This fluid loss may cause sand bridges to form in the annulus before the gravel pack has been completed. To address this problem, alternate flowpaths, such as shunt tubes, may be utilized to bypass sand bridges and distribute the gravel evenly through the intervals. For further details of such alternate flowpaths, see U.S. Pat. Nos. 4,945,991; 5,082,052; 5,113,935; 5,333,688; 5,515,915; 5,868,200; 5,890,533; 6,059,032; 6,588,506; and International Application Publication No. WO 2004/094784; which are incorporated herein by reference.

While the shunt tubes assist in forming the gravel pack, the use of shunt tubes may limit the methods of providing zonal isolation with gravel packs because the shunt tubes complicate the use of a packer in connection with sand control devices. For example, such an assembly requires that the flow path of the shunt tubes be uninterrupted when engaging a packer. If the shunt tubes are disposed exterior to the packer, they may be damaged when the packer expands or they may interfere with the proper operation of the packer. Shunt tubes in eccentric alignment with the well tool may require the packer to be in eccentric alignment, which makes the overall diameter of the well tool larger and non-uniform. Existing designs utilize a union type connection, a timed connection to align the multiple tubes, a jumper shunt tube connection between joint assemblies, or a cylindrical cover plate over the connection. These connections are expensive, time-consuming, and/or difficult to handle on the rig floor while making up and installing the production tubing string.

Concentric alternate flow paths utilizing smaller-diameter, round shunt tubes are preferable, but create other design difficulties. Concentric shunt tube designs are complicated by the need for highly precise alignment of the internal shunt tubes and the basepipe of the packer with the shunt tubes and basepipe of the sand control devices. If the shunt tubes are disposed external to the sand screen, the tubes are exposed to the harsh wellbore environment and are likely to be damaged during installation or operation. The high precision requirements to align the shunt tubes make manufacture and assembly of the well tools more costly and time consuming. Some devices have been developed to simplify this make-up, but are generally not effective.

Some examples of internal shunt devices are the subject of U.S. Patent Application Publication Nos. 2005/0082060, 2005/0061501, 2005/0028977, and 2004/0140089. These patent applications generally describe sand control devices having shunt tubes disposed between a basepipe and a sand screen, wherein the shunt tubes are in direct fluid communication with a crossover tool for distributing a gravel pack. They describe the use of a manifold region above the make-up connection and nozzles spaced intermittently along the shunt tubes. However, these devices are not effective for completions longer than about 3,500 feet.

Accordingly, the need exists for a method and apparatus that provides alternate flow paths for a variety of well tools, including, but not limited to sand control devices, sand screens, and packers to gravel pack different intervals within a well, and a system and method for efficiently coupling the well tools.

Other related material may be found in at least U.S. Pat. Nos. 5,476,143; 5,588,487; 5,934,376; 6,227,303; 6,298,916; 6,464,261; 6,516,882; 6,588,506; 6,749,023; 6,752,207; 6,789,624; 6,814,139; 6,817,410; International Application Publication No. WO 2004/094769; U.S. Patent Application Publication Nos. 2004/0003922; 2005/0284643; 2005/0205269; and "Alternate Path Completions: A Critical Review and Lessons Learned From Case Histories With Recommended Practices for Deepwater Applications," G. Hurst, et al. SPE Paper No. 86532-MS.

SUMMARY

In one embodiment an apparatus associated with the drilling, production or monitoring of downhole environments is described. The apparatus includes a joint assembly comprising a main body portion having a first and second end and a load sleeve assembly having an inner diameter. The load sleeve assembly is operably attached to the main body portion at or near the first end, the load sleeve assembly including at least one transport conduit and at least one packing conduit, wherein both the at least one transport conduit and the at least one packing conduit are disposed exterior to the inner diameter. The apparatus further includes a torque sleeve assembly with an inner diameter and operably attached to the main body portion at or near the second end. The torque sleeve assembly also includes at least one conduit, wherein the at least one conduit is disposed exterior to the inner diameter. The apparatus further includes a coupling assembly operably attached to at least a portion of the first end of the main body portion, the coupling assembly including a manifold region, wherein the manifold region is configured to be in fluid flow communication with the at least one transport conduit and at least one packing conduit of the load sleeve assembly. The apparatus may also include a coax sleeve and at least one torque spacer as part of the coupling assembly.

Another embodiment describes an apparatus for use with drilling, production or monitoring of downhole environments including a coupling assembly comprising a first well tool having first and second ends, a first primary fluid flow path, and a first alternative fluid flow path. The apparatus also includes a second well tool having a first and second ends, a second primary fluid flow path, and a second alternative fluid flow path as well as a coupling, the coupling being operably attached to the first end of the first well tool and the second end of the second well tool, wherein the coupling allows for substantial axial alignment between the first primary fluid flow path and the second primary fluid flow path. The coupling assembly also includes a manifold region disposed substantially concentrically around the coupling, wherein the manifold region allows for substantial fluid flow communication between the first alternative fluid flow path and the second alternative fluid flow path and including at least one torque spacer operably attached to the coupling, wherein the torque spacer is substantially disposed within the manifold region. The coupling assembly may also include a coax sleeve around the coupling for enclosing the manifold region and attaching to at least one of the torque spacers.

Another embodiment of the apparatus describes a load sleeve assembly comprising an elongated body of substantially cylindrical shape having an outer diameter, a first and second end, and a bore extending from the first end to the second end, wherein the bore forms an inner diameter in the elongated body. The load sleeve assembly also includes at least one transport conduit and at least one packing conduit, each of the transport conduits and packing conduits extending from the first end to the second end of the elongated body, each of the transport conduits and packing conduits forming openings at each of the first end and second end of the elongated body, wherein the openings are located at least substantially between the inner diameter and the outer diameter. Further, the opening of the transport conduit is configured at the first end to reduce entry pressure loss. The load sleeve assembly may also include a shoulder portion configured to support a load, such as a load caused by production tube running operations.

Yet another embodiment of the apparatus describes a torque sleeve assembly comprising an elongated body of substantially cylindrical shape having an outer diameter, a first and second end, and a bore extending from the first end to the second end, the bore forming an inner diameter in the elongated body. The torque sleeve assembly also includes at least one transport conduit and at least one packing conduit located at least substantially between the inner and outer diameters of the elongated body, the transport conduit extending through the torque sleeve assembly from the first end to the second end, and the packing conduit extending from the first end to a position inside the torque sleeve assembly at an axial distance from the second end towards the first end of the elongated body where it may be in fluid flow communication with an exit nozzle.

A further embodiment of the apparatus describes a nozzle ring comprising a body of substantially cylindrical shape having an outer diameter and a bore extending from a first to a second end, the bore forming an inner diameter. The nozzle ring also including at least one transport channel and at least one packing channel, the at least one transport channel and at least one packing channel extending from the first to the second end and located substantially between the inner diameter and outer diameter, wherein each of the transport channel and packing channel are configured to receive a shunt tube therein. There may also be a hole formed in the outer diameter of the body and extending radially inward, wherein the hole at

least partially intersects at least one of the at least one packing channel such that the at least one packing channel and the hole are in fluid flow communication. Further, at least one outlet formed from the at least one packing channel to the outer diameter.

A method of assembling the joint assembly is also described. The method includes operably attaching a load sleeve assembly to a main body portion at or near a first end of the main body portion, wherein the load sleeve assembly has an inner diameter and including at least one transport conduit and at least one packing conduit, wherein both the at least one transport conduit and the at least one packing conduit are disposed exterior to the inner diameter. The method also includes operably attaching a torque sleeve assembly to the main body portion at or near a second end of the main body portion, the torque sleeve assembly having an inner diameter and including at least one conduit, wherein the at least one conduit is disposed exterior to the inner diameter. Assembly further includes operably attaching a coupling to the first end of the main body portion and operably attaching at least one torque spacer to the coupling.

A method of producing hydrocarbons from a subterranean formation is also described, which includes producing hydrocarbons from the subterranean formation through a wellbore completed through at least a portion of the subterranean formation. The wellbore has a production string, the production string including a plurality of joint assemblies, wherein the plurality of joint assemblies comprise a load sleeve assembly having an inner diameter, at least one transport conduit and at least one packing conduit, wherein both the at least one transport conduit and the at least one packing conduit are disposed exterior to the inner diameter, the load sleeve operably attached to a main body portion of one of the plurality of joint assemblies. The plurality of joint assemblies also include a torque sleeve assembly having an inner diameter and at least one conduit, wherein the at least one conduit is disposed exterior to the inner diameter, and the torque sleeve is operably attached to a main body portion of one of the plurality of joint assemblies. Additionally, the joint assemblies include a coupling assembly having a manifold region, wherein the manifold region is configured be in fluid flow communication with the at least one transport conduit and at least one packing conduit of the load sleeve assembly, wherein the coupling assembly is operably attached to at least a portion of one of the plurality of joint assemblies at or near the load sleeve assembly.

BRIEF DESCRIPTION OF THE DRAWINGS

The foregoing and other advantages of the present techniques may become apparent upon reviewing the following detailed description and drawings in which:

FIG. **1** is an exemplary production system in accordance with certain aspects of the present techniques;

FIGS. **2**A-**2**B are exemplary embodiments of conventional sand control devices utilized within wellbores;

FIGS. **3**A-**3**C are a side view, a section view, and an end view of an exemplary embodiment of a joint assembly utilized in the production system of FIG. **1** in accordance with certain aspects of the present techniques;

FIGS. **4**A-**4**B are two cut-out side views of exemplary embodiments of the coupling assembly utilized with the joint assembly of FIGS. **3**A-**3**C and the production system of FIG. **1** in accordance with certain aspects of the present techniques;

FIGS. **5**A-**5**B are an isometric view and an end view of an exemplary embodiment of a load sleeve assembly utilized as part of the joint assembly of FIGS. **3**A-**3**C, the coupling assembly of FIGS. **4**A-**4**B, and in the production system of FIG. **1** in accordance with certain aspects of the present techniques;

FIG. **6** is an isometric view of an exemplary embodiment of a torque sleeve assembly utilized as part of the joint assembly of FIGS. **3**A-**3**C, the coupling assembly of FIGS. **4**A-**4**B, and in the production system of FIG. **1** in accordance with certain aspects of the present techniques;

FIG. **7** is an end view of an exemplary embodiment of a nozzle ring utilized in the joint assembly of FIGS. **3**A-**3**C in accordance with certain aspects of the present techniques.

FIG. **8** is an exemplary flow chart of a method of assembly of the joint assembly of FIGS. **3**A-**3**C in accordance with aspects of the present techniques.

FIG. **9** is an exemplary flow chart of a method of producing hydrocarbons from a subterranean formation utilizing the joint assembly of FIG. **3**A-**3**C and the production system of FIG. **1** in accordance with aspects of the present techniques.

DETAILED DESCRIPTION

In the following detailed description section, the specific embodiments of the present techniques are described in connection with preferred embodiments. However, to the extent that the following description is specific to a particular embodiment or a particular use of the present techniques, this is intended to be for exemplary purposes only and simply provides a description of the exemplary embodiments. Accordingly, the invention is not limited to the specific embodiments described below, but rather, it includes all alternatives, modifications, and equivalents falling within the true spirit and scope of the appended claims.

Although the wellbore is depicted as a vertical wellbore, it should be noted that the present techniques are intended to work in a vertical, horizontal, deviated, or other type of wellbore. Also, any directional description such as 'upstream,' 'downstream,' 'axial,' 'radial,' etc. should be read in context and is not intended to limit the orientation of the wellbore, joint assembly, or any other part of the present techniques.

Some embodiments of the present techniques may include one or more joint assemblies that may be utilized in a completion, production, or injection system to enhance well completion, e.g., gravel pack, and/or enhance production of hydrocarbons from a well and/or enhance the injection of fluids or gases into the well. Some embodiments of the joint assemblies may include well tools such as sand control devices, packers, cross-over tools, sliding sleeves, shunted blanks, or other devices known in the art. Under some embodiments of the present techniques, the joint assemblies may include alternate path mechanisms for utilization in providing zonal isolation within a gravel pack in a well. In addition, well apparatuses are described that may be utilized in an open or cased-hole completion. Some embodiments of the joint assembly of the present techniques may include a common manifold or manifold region providing fluid communication through a coupling assembly to a joint assembly, which may include a basepipe, shunt tubes, packers, sand control devices, intelligent well devices, cross-coupling flow devices, in-flow control devices, and other tools. As such, some embodiments of the present techniques may be used for design and manufacture of well tools, well completions for flow control, monitoring and management of the wellbore environment, hydrocarbon production and/or fluid injection treatments.

The coupling assembly of some embodiments of the present techniques may be used with any type of well tool, including packers and sand control devices. The coupling

assembly of the present techniques may also be used in combination with other well technologies such as smart well devices, cross-coupling flow techniques, and in-flow control devices. Some embodiments of the coupling assembly of the present techniques may provide a concentric alternate flow path and a simplified coupling interface for use with a variety of well tools. The coupling assembly may also form a manifold region and may connect with a second well tool via a single threaded connection. Further, some embodiments of the coupling assembly may be used in combination with techniques to provide intermittent gravel packing and zonal isolation. Some of these techniques are taught in U.S. applications having Ser. Nos. 60/765,023 and 60/775,434, which are hereby incorporated by reference.

Turning now to the drawings, and referring initially to FIG. **1**, an exemplary production system **100** in accordance with certain aspects of the present techniques is illustrated. In the exemplary production system **100**, a floating production facility **102** is coupled to a subsea tree **104** located on the sea floor **106**. Through this subsea tree **104**, the floating production facility **102** accesses one or more subsurface formations, such as subsurface formation **107**, which may include multiple production intervals or zones **108***a*-**108***n*, wherein number "n" is any integer number, having hydrocarbons, such as oil and gas. Beneficially, well tools, such as sand control devices **138***a*-**138***n*, may be utilized to enhance the production of hydrocarbons from the production intervals **108***a*-**108***n*. However, it should be noted that the production system **100** is illustrated for exemplary purposes and the present techniques may be useful in the production or injection of fluids from any subsea, platform or land location.

The floating production facility **102** may be configured to monitor and produce hydrocarbons from the production intervals **108***a*-**108***n* of the subsurface formation **107**. The floating production facility **102** may be a floating vessel capable of managing the production of fluids, such as hydrocarbons, from subsea wells. These fluids may be stored on the floating production facility **102** and/or provided to tankers (not shown). To access the production intervals **108***a*-**108***n*, the floating production facility **102** is coupled to a subsea tree **104** and control valve **110** via a control umbilical **112**. The control umbilical **112** may be operatively connected to production tubing for providing hydrocarbons from the subsea tree **104** to the floating production facility **102**, control tubing for hydraulic or electrical devices, and a control cable for communicating with other devices within the wellbore **114**.

To access the production intervals **108***a*-**108***n*, the wellbore **114** penetrates the sea floor **106** to a depth that interfaces with the production intervals **108***a*-**108***n* at different depths within the wellbore **114**. As may be appreciated, the production intervals **108***a*-**108***n*, which may be referred to as production intervals **108**, may include various layers or intervals of rock that may or may not include hydrocarbons and may be referred to as zones. The subsea tree **104**, which is positioned over the wellbore **114** at the sea floor **106**, provides an interface between devices within the wellbore **114** and the floating production facility **102**. Accordingly, the subsea tree **104** may be coupled to a production tubing string **128** to provide fluid flow paths and a control cable (not shown) to provide communication paths, which may interface with the control umbilical **112** at the subsea tree **104**.

Within the wellbore **114**, the production system **100** may also include different equipment to provide access to the production intervals **108***a*-**108***n*. For instance, a surface casing string **124** may be installed from the sea floor **106** to a location at a specific depth beneath the sea floor **106**. Within the surface casing string **124**, an intermediate or production casing string **126**, which may extend down to a depth near the production interval **108**, may be utilized to provide support for walls of the wellbore **114**. The surface and production casing strings **124** and **126** may be cemented into a fixed position within the wellbore **114** to further stabilize the wellbore **114**. Within the surface and production casing strings **124** and **126**, a production tubing string **128** may be utilized to provide a flow path through the wellbore **114** for hydrocarbons and other fluids. Along this flow path, a subsurface safety valve **132** may be utilized to block the flow of fluids from the production tubing string **128** in the event of rupture or break above the subsurface safety valve **132**. Further, sand control devices **138***a*-**138***n* are utilized to manage the flow of particles into the production tubing string **128** with gravel packs **140***a*-**140***n*. The sand control devices **138***a*-**138***n* may include slotted liners, stand-alone screens (SAS); pre-packed screens; wire-wrapped screens, sintered metal screens, membrane screens, expandable screens and/or wire-mesh screens, while the gravel packs **140***a*-**140***n* may include gravel, sand, incompressible particles, or other suitable solid, granular material. Some embodiments of the joint assembly of the present techniques may include a well tool such as one of the sand control devices **138***a*-**138***n* or one of the packers **134***a*-**134***n*.

The sand control devices **138***a*-**138***n* may be coupled to one or more of the packers **134***a*-**134***n*, which may be herein referred to as packer(s) **134** or other well tools. Preferably, the coupling assembly between the sand control devices **138***a*-**138***n*, which may be herein referred to as sand control device (s) **138**, and other well tools should be easy to assemble on the floating production facility **102**. Further, the sand control devices **138** may be configured to provide a relatively uninterrupted fluid flow path through a basepipe and a secondary flow path, such as a shunt tube or double-walled pipe.

The system may utilize a packer **134** to isolate specific zones within the wellbore annulus from each other. The joint assemblies may include a packer **134**, a sand control device **138** or other well tool and may be configured to provide fluid communication paths between various well tools in different intervals **108***a*-**108***n*, while preventing fluid flow in one or more other areas, such as a wellbore annulus. The fluid communication paths may include a common manifold region. Regardless, the packers **134** may be utilized to provide zonal isolation and a mechanism for providing a substantially complete gravel pack within each interval **108***a*-**108***n*. For exemplary purposes, certain embodiments of the packers **134** are described further in U.S. application Ser. Nos. 60/765,023 and 60/775,434 the portions of which describing packers are herein incorporated by reference.

FIGS. **2**A-**2**B are partial views of embodiments of conventional sand control devices jointed together within a wellbore. Each of the sand control devices **200***a* and **200***b* may include a tubular member or base pipe **202** surrounded by a filter medium or sand screen **204**. Ribs **206** may be utilized to keep the sand screens **204** a specific distance from the base pipes **202**. Sand screens may include multiple wire segments, mesh screen, wire wrapping, a medium to prevent a predetermined particle size and any combination thereof. Shunt tubes **208***a* and **208***b*, which may be collectively referred to as shunt tubes **208**, may include packing tubes **208***a* or transport tubes **208***b* and may also be utilized with the sand screens **204** for gravel packing within the wellbore. The packing tubes **208***a* may have one or more valves or nozzles **212** that provide a flow path for the gravel pack slurry, which includes a carrier fluid and gravel, to the annulus formed between the sand screen **204** and the walls of the wellbore. The valves may prevent fluids from an isolated interval from flowing through the at

least one jumper tube to another interval. For an alternative perspective of the partial view of the sand control device **200***a*, a cross sectional view of the various components along the line AA is shown in FIG. **2**B. It should be noted that in addition to the external shunt tubes shown in FIGS. **2**A and **2**B, which are described in U.S. Pat. Nos. 4,945,991 and 5,113,935, internal shunt tubes, which are described in U.S. Pat. Nos. 5,515,915 and 6,227,303, may also be utilized.

While this type of sand control device is useful for certain wells, it is unable to isolate different intervals within the wellbore. As noted above, the problems with the water/gas production may include productivity loss, equipment damage, and/or increased treating, handling and disposal costs. These problems are further compounded for wells that have a number of different completion intervals and where the formation strength may vary from interval to interval. As such, water or gas breakthrough in any one of the intervals may threaten the remaining reserves within the well. The connection of the present technique facilitates efficient alternate path fluid flow technology in a production string **128**. Some embodiments of the present techniques provide for a single fixed connection between the downstream end of a first well tool and the upstream end of a second well tool. This eliminates the costly and time-consuming practice of aligning shunt tubes or other alternate flow path devices while eliminating the need for eccentric alternate flow paths. Some embodiments of the present techniques also eliminate the need to make timed connections of primary and secondary flow paths. Accordingly, to provide the zonal isolation within the wellbore **114**, various embodiments of sand control devices **138**, coupling assemblies and methods for coupling the sand control devices **138** to other well tools are discussed below and shown in FIGS. **3**-**9**.

FIGS. **3**A-**3**C are a side view, a sectional view, and an end view of an exemplary embodiment of a joint assembly **300** utilized in the production system **100** of FIG. **1**. Accordingly, FIGS. **3**A-**3**C may be best understood by concurrently viewing FIG. **1**. The joint assembly **300** may consist of a main body portion having a first or upstream end and a second or downstream end, including a load sleeve assembly **303** operably attached at or near the first end, a torque sleeve assembly **305** operably attached at or near the second end, a coupling assembly **301** operably attached to the first end, the coupling assembly **301** including a coupling **307** and a manifold region **315**. Additionally, the load sleeve assembly **303** includes at least one transport conduit and at least one packing conduit (see FIG. **5**) and the torque sleeve includes at least one conduit (not shown).

Some embodiments of the joint assembly **300** of the present techniques may be coupled to other joint assemblies, which may include packers, sand control devices, shunted blanks, or other well tools via the coupling assembly **301**. It may require only a single threaded connection and be configured to form an adaptable manifold region **315** between the coupled well tools. The manifold region **315** may be configured to form an annulus around the coupling **307**. The joint assembly **300** may include a primary fluid flow assembly or path **318** through the main body portion and through an inner diameter of the coupling **307**. The load sleeve assembly **303** may include at least one packing conduit and at least one transport conduit, and the torque sleeve assembly **305** may include at least one conduit, but may not include a packing conduit (see FIGS. **5** and **6** for exemplary embodiments of the transport and packing conduits). These conduits may be in fluid flow communication with each other through an alternate fluid flow assembly or path **320** of the joint assembly **300** although the part of the fluid flow assembly **320** in fluid flow communication with the packing conduits of the load sleeve assembly **303** may terminate before entering the torque sleeve assembly, or may terminate inside the torque sleeve assembly **305**. The manifold section **315** may facilitate a continuous fluid flow through the alternate fluid flow assembly or path **320** of the joint assembly **300** without requiring a timed connection to line-up the openings of the load sleeve assembly **303** and torque sleeve assembly **305** with the alternate fluid flow assembly **320** during make-up of the production tubing string **128**. A single threaded connection makes up the coupling assembly **301** between joint assemblies **300**, thereby reducing complexity and make-up time. This technology facilitates alternate path flow through various well tools and allows an operator to design and operate a production tubing string **128** to provide zonal isolation in a wellbore **114** as disclosed in U.S. application Ser. Nos. 60/765,023 and 60/775,434. The present technology may also be combined with methods and tools for use in installing an open-hole gravel pack completion as disclosed in U.S. patent publication no. US2007/0068675, which is hereby incorporated by reference, and other wellbore treatments and processes.

Some embodiments of the joint assembly of the present techniques comprise a load sleeve assembly **303** at a first end, a torque sleeve assembly **305** at a second end, a basepipe **302** forming at least a portion of the main body portion, a coupling **307**, a primary flow path **320** through the coupling **307**, a coax sleeve **311**, and an alternate flow path **320** between the coupling **307** and coax sleeve **311**, through the load sleeve assembly **303**, along the outer diameter of the basepipe **302**, and through the torque sleeve assembly **305**. The torque sleeve assembly **305** of one joint assembly **300** is configured to attach to the load sleeve assembly **303** of a second assembly through the coupling assembly **301**, whether the joint assembly **300** includes a sand control device, packer, or other well tool.

Some embodiments of the joint assembly **300** preferably include a basepipe **302** having a load sleeve assembly **303** positioned near an upstream or first end of the basepipe **302**. The basepipe **302** may include perforations or slots, wherein the perforations or slots may be grouped together along the basepipe **302** or a portion thereof to provide for routing of fluid or other applications. The basepipe **302** preferably extends the axial length of the joint assembly and is operably attached to a torque sleeve **305** at a downstream or second end of the basepipe **302**. The joint assembly **300** may further include at least one nozzle ring **310***a*-**310***e* positioned along its length, at least one sand screen segment **314***a*-**314***f* and at least one centralizer **316***a*-**316***b*. As used herein, the term "sand screen" refers to any filtering mechanism configured to prevent passage of particulate matter having a certain size, while permitting flow of gases, liquids and small particles. The size of the filter will generally be in the range of 60-120 mesh, but may be larger or smaller depending on the specific environment. Many sand screen types are known in the art and include wire-wrap, mesh material, woven mesh, sintered mesh, wrap-around perforated or slotted sheets, Schlumberger's MESHRITE™ and Reslink's LINESLOT™ products. Preferably, sand screen segments **314***a*-**314***f* are disposed between one of the plurality of nozzle rings **310***a*-**310***e* and the torque sleeve assembly **305**, between two of the plurality of nozzle rings **310***a*-**310***e*, or between the load sleeve assembly **303** and one of the plurality of nozzle rings **310***a*-**310***e*. The at least one centralizer **316***a*-**316***b* may be placed around at least a portion of the load ring assembly **303** or at least a portion of one of the plurality of nozzle rings **310***a*-**310***e*.

As shown in FIG. **3**B, in some embodiments of the present techniques, the transport and packing tubes **308***a*-**308***i*, (al-

though nine tubes are shown, the invention may include more or less than nine tubes) preferably have a circular cross-section for withstanding higher pressures associated with greater depth wells. The transport and packing tubes **308***a*-**308***i* may also be continuous for the entire length of the joint assembly **300**. Further, the tubes **308***a*-**308***i* may preferably be constructed from steel, more preferably from lower yield, weldable steel. One example is 316L. One embodiment of the load sleeve assembly **303** is constructed from high yield steel, a less weldable material. One preferred embodiment of the load sleeve assembly **303** combines a high strength material with a more weldable material prior to machining. Such a combination may be welded and heat treated. The packing tubes **308***g*-**308***i* (although only three packing tubes are shown, the invention may include more or less than three packing tubes) include nozzle openings **310** at regular intervals, for example, every approximately six feet, to facilitate the passage of flowable substances, such as a gravel slurry, from the packing tube **308***g*-**308***i* to the wellbore **114** annulus to pack the production interval **108***a*-**108***n*, deliver a treatment fluid to the interval, produce hydrocarbons, monitor or manage the wellbore. Many combinations of packing and transport tubes **308***a*-**308***i* may be used. An exemplary combination includes six transport tubes **308***a*-**308***f* and three packing tubes **308***g*-**308***i*.

The preferred embodiment of the joint assembly **300** may further include a plurality of axial rods **312***a*-**312***n*, wherein 'n' can be any integer, extending parallel to the shunt tubes **308***a*-**308***n* adjacent to the length of the basepipe **302**. The axial rods **312***a*-**312***n* provide additional structural integrity to the joint assembly **300** and at least partially support the sand screen segments **314***a*-**314***f*. Some embodiments of the joint assembly **300** may incorporate from one to six axial rods **312***a*-**312***n* per shunt tube **308***a*-**308***n*. An exemplary combination includes three axial rods **312** between each pair of shunt tubes **308**.

In some embodiments of the present techniques the sand screen segments **314***a*-**314***f* may be attached to a weld ring (not shown) where the sand screen segment **314***a*-**314***f* meets a load sleeve assembly **303**, nozzle ring **310**, or torque sleeve assembly **305**. An exemplary weld ring includes two pieces joined along at least one axial length by a hinge and joined at an opposite axial length by a split, clip, other attachment mechanism, or some combination. Further, a centralizer **316** may be fitted over the body portion (not shown) of the load sleeve assembly **303** and at the approximate midpoint of the joint assembly **300**. In one preferred embodiment, one of the nozzle rings **310***a*-**310***e* comprises an extended axial length to accept a centralizer **316** thereon. As shown in FIG. **3**C, the manifold region **315** may also include a plurality of torque spacers or profiles **309***a*-**309***e*.

FIGS. **4**A-**4**B are cut-out views of two exemplary embodiments of a coupled assembly **301** utilized in combination with the joint assembly **300** of FIGS. **3**A-**3**B and in the production system **100** of FIG. **1**. Accordingly, FIGS. **4**A-**4**B may be best understood by concurrently viewing FIGS. **1** and **3**A-**3**B. In the exemplary embodiment illustrated in FIG. **4**A, the coupled assembly **301** includes a first well tool **300***a*, a second well tool **300***b*, a coupling **307**, and a torque spacer **309***a*. In the exemplary embodiment illustrated in FIG. **4**B, the coupled assembly **301** consists of a first well tool **300***a*, a second well tool **300***b*, a coax sleeve **311**, a coupling **307**, and at least one torque spacer **309***a*, (although only one is shown in this view, there may be more than one as shown in FIG. **3**C), whereby the portion of the coupled assembly **301** including coaxial sleeve **311** and within the region defined by dimension **317** may also be referred to as a coupling assembly **301** for purposes herein.

Referring to FIG. **4**A, one preferred embodiment of the coupling assembly **301** may comprise a first joint assembly **300***a* having a main body portion, a primary fluid flow path **318** and an alternate fluid flow path **320**, wherein one end of the well tool **300***a* or **300***b* is operably attached to a coupling **307**. The embodiment may also include a second well tool **300***b* having primary **318** and alternate **320** fluid flow paths wherein one end of the well tool **300** is operably attached to a coupling **307**. Preferably, the primary fluid flow path **318** of the first and second well tools **300***a* and **300***b* are in substantial fluid flow communication via the inner diameter of the coupling **307** and the alternate fluid flow path **320** of the first and second well tools **300***a* and **300***b* are in substantial fluid flow communication through the manifold region **315** around the outer diameter of the coupling **307**. This embodiment further includes at least one torque spacer **309***a* fixed at least partially in the manifold region **315**. The at least one torque spacer **309***a* is configured to prevent tortuous flow and provide additional structural integrity to the coupling assembly **301**. The manifold region **315** is an annular volume at least partially interfered with by the at least one torque spacer **309***a*, wherein the inner diameter of the manifold region **315** is defined by the outer diameter of the coupling **307** and the outer diameter of the manifold region **315** may be defined by the well tools **300** or by a sleeve in substantially concentric alignment with the coupling **307**, called a coax sleeve **311**.

Referring now to FIG. **4**B, some embodiments of the coupling assembly **301** of the present techniques may comprise at least one alternate fluid flow path **320** extending from an upstream or first end of the coupling assembly **301**, between the coax sleeve **311** and coupling **307** and through a portion of a load sleeve assembly **303**. Preferably, the coupling **307** is operably attached to the upstream end of a basepipe **302** by a threaded connection. The coax sleeve **311** is positioned around the coupling **307**, forming a manifold region **315**. The attachment mechanism may comprise a threaded connector **410** through the coax sleeve **311**, through one of the at least one torque profiles or spacers **309***a* and into the coupling **307**. There may be two threaded connectors **410***a*-**410***n*, wherein 'n' may be any integer, for each torque profile **309***a*-**309***e* wherein one of the threaded connectors **410***a*-**410***n* extends through the torque profile **309***a*-**309***e* and the other terminates in the body of the torque profile **309***a*-**309***e*.

In some embodiments of the present techniques, the volume between the coax sleeve **311** and the coupling **307** forms the manifold region **315** of the coupling assembly **301**. The manifold region **315** may beneficially provide an alternate path fluid flow connection between a first and second joint assembly **300***a* and **300***b*, which may include a packer, sand control device, or other well tool. In a preferred embodiment, fluids flowing into the manifold region **315**, may follow a path of least resistance when entering the second joint assembly **300***b*. The torque profiles or spacers **309***a*-**309***e* may be at least partially disposed between the coax sleeve **311** and the coupling **307** and at least partially disposed in the manifold region **315**. The coupling **307** may couple the load sleeve assembly **303** of a first joint assembly **300***a* to the torque sleeve assembly **305** of a second well tool **300***b*. Beneficially, this provides a more simplified make-up and improved compatibility between joint assemblies **300***a* and **300***b* which may include a variety of well tools.

It is also preferred that the coupling **307** operably attaches to the basepipe **302** with a threaded connection and the coax sleeve **311** operably attaches to the coupling **307** with

threaded connectors. The threaded connectors **410***a*-**410***n*, wherein 'n' may be any integer, pass through the torque spacers or profiles **309***a*-**309***e*. The torque profiles **309***a*-**309***e* preferably have an aerodynamic shape, more preferably based on NACA (National Advisory Committee for Aeronautics) standards. The number of torque profiles **309***a*-**309***e* used may vary according to the dimensions of the coupling assembly **301**, the type of fluids intended to pass therethrough and other factors. One exemplary embodiment includes five torque spacers **309***a*-**309***e* spaced equally around the annulus of the manifold region **315**. However, it should be noted that various numbers of torque spacers **309***a*-**309***e* and connectors may be utilized to practice the present techniques.

In some embodiments of the present techniques the torque spacers **309***a*-**309***e* may be fixed by threaded connectors **410***a*-**410***n* extending through the coax sleeve **311** into the torque spacers **309***a*-**309***e*. The threaded connectors **410***a*-**410***n* may then protrude into machined holes in the coupling **307**. As an example, one preferred embodiment may include ten (10) threaded connectors **410***a*-**410***e*, wherein two connectors pass into each aerodynamic torque spacer **309***a*-**309***e*. Additionally, one of the connectors **410***a*-**410***e* may pass through the torque spacer **309***a*-**309***e* and the other of the two connectors **410***a*-**410***i* may terminate in the body of the torque spacer **309***a*-**309***e*. However, other numbers and combinations of threaded connectors may be utilized to practice the present techniques.

Additionally, the torque spacers or profiles **309***a*-**309***e* may be positioned such that the more rounded end is oriented in the upstream direction to create the least amount of drag on the fluid passing through the manifold region **315** while at least partially inhibiting the fluid from following a tortuous path. In one preferred embodiment, sealing rings such as o-rings and backup rings **412** may be fitted between the inner lip of the coax sleeve **311** and a lip portion of each of the torque sleeve assembly **305** and the load sleeve assembly **303**.

FIGS. **5**A-**5**B are an isometric view and an end view of an exemplary embodiment of a load sleeve assembly **303** utilized in the production system **100** of FIG. **1**, the joint assembly **300** of FIGS. **3**A-**3**C, and the coupling assembly **301** of FIGS. **4**A-**4**B in accordance with certain aspects of the present techniques. Accordingly, FIGS. **5**A-**5**B may be best understood by concurrently viewing FIGS. **1**, **3**A-**3**C, and **4**A-**4**B. The load sleeve assembly **303** comprises an elongated body **520** of substantially cylindrical shape having an outer diameter and a bore extending from a first end **504** to a second end **502**. The load sleeve assembly **303** may also include at least one transport conduit **508***a*-**508***f* and at least one packing conduit **508***g*-**508***i*, (although six transport conduits and three packing conduits are shown, the invention may include more or less such conduits) extending from the first end **504** to the second end **502** to form openings located at least substantially between the inner diameter **506** and the outer diameter wherein the opening of the at least one transport conduit **508***a*-**508***f* is configured at the first end to reduce entry pressure loss (not shown).

Some embodiments of the load sleeve assembly of the present techniques may further include at least one opening at the second end **502** of the load sleeve assembly configured to be in fluid communication with a shunt tube **308***a*-**308***i*, a double-walled basepipe, or other alternate path fluid flow mechanism. The first end **504** of the load sleeve assembly **303** includes a lip portion **510** adapted and configured to receive a backup ring and/or an o-ring **412**. The load sleeve assembly **303** may also include a load shoulder **512** to permit standard well tool insertion equipment on the floating production facility or rig **102** to handle the load sleeve assembly **303** during screen running operations. The load sleeve assembly **303** additionally may include a body portion **520** and a mechanism for operably attaching a basepipe **302** to the load sleeve assembly **303**.

In some embodiments of the present techniques, the transport and packing conduits **508***a*-**508***i* are adapted at the second end **502** of the load sleeve assembly **303** to be operably attached, preferably welded, to shunt tubes **308***a*-**308***i*. The shunt tubes **308***a*-**308***i* may be welded by any method known in the art, including direct welding or welding through a bushing. The shunt tubes **308***a*-**308***i* preferably have a round cross-section and are positioned around the basepipe **302** at substantially equal intervals to establish a concentric cross-section. The transport conduits **508***a*-**508***f* may also have a reduced entry pressure loss or smooth-profile design at their upstream opening to facilitate the fluid flow into the transport tubes **308***a*-**308***f*. The smooth profile design preferably comprises a "trumpet" or "smiley face" configuration. As an example, one preferred embodiment may include six transport conduits **508***a*-**508***f* and three packing conduits **508***g*-**508***i*. However, it should be noted that any number of packing and transport conduits may be utilized to practice the present techniques.

In some embodiments of the load sleeve assembly **303** a load ring (not shown) is utilized in connection with the load sleeve assembly **303**. The load ring is fitted to the basepipe **302** adjacent to and on the upstream side of the load sleeve assembly **303**. In one preferred embodiment the load sleeve assembly **303** includes at least one transport conduit **508***a*-**508***f* and at least one packing conduit **508***g*-**508***i*, wherein the inlets of the load ring are configured to be in fluid flow communication with the transport and packing conduits **508***a*-**508***i*. As an example, alignment pins or grooves (not shown) may be incorporated to ensure proper alignment of the load ring and load sleeve assembly **303**. A portion of the inlets of the load ring are shaped like the mouth of a trumpet to reduce entry pressure loss or provide a smooth-profile. Preferably, the inlets aligned with the transport conduits **508***a*-**508***f* incorporate the "trumpet" shape, whereas the inlets aligned with the packing conduits **508***g*-**508***i* do not incorporate the "trumpet" shape.

Although the load ring and load sleeve assembly **303** function as a single unit for fluid flow purposes, it may be preferable to utilize two separate parts to allow a basepipe seal to be placed between the basepipe **302** and the load sleeve assembly **303** so the load ring can act as a seal retainer when properly fitted to the basepipe **302**. In an alternate embodiment, the load sleeve assembly **303** and load ring comprise a single unit welded in place on the basepipe **302** such that the weld substantially restricts or prevents fluid flow between the load sleeve assembly **303** and the basepipe **302**.

In some embodiments of the present techniques, the load sleeve assembly **303** includes beveled edges **516** at the downstream end **502** for easier welding of the shunt tubes **308***a*-**308***i* thereto. The preferred embodiment also incorporates a plurality of radial slots or grooves **518***a*-**518***n*, in the face of the downstream or second end **502** to accept a plurality of axial rods **312***a*-**312***n*, wherein 'n' can be any integer. An exemplary embodiment includes three axial rods **312***a*-**312***n* between each pair of shunt tubes **308***a*-**308***i* attached to each load sleeve assembly **303**. Other embodiments may include none, one, two, or a varying number of axial rods **312***a*-**312***n* between each pair of shunt tubes **308***a*-**308***i*.

The load sleeve assembly **303** is preferably manufactured from a material having sufficient strength to withstand the contact forces achieved during screen running operations. One preferred material is a high yield alloy material such as

S165M. The load sleeve assembly **303** may be operably attached to the basepipe **302** utilizing any mechanism that effectively transfers forces from the load sleeve assembly **303** to the basepipe **302**, such as by welding, clamping, latching, or other techniques known in the art. One preferred mechanism for securing the load sleeve assembly **303** to the basepipe **302** is a threaded connector, such as a torque bolt, driven through the load sleeve assembly **303** into the basepipe **302**. Preferably, the load sleeve assembly **303** includes radial holes **514***a*-**514***n*, wherein 'n' can be any integer, between its downstream end **502** and the load shoulder **512** to receive the threaded connectors **406**. For example, there may be nine holes **514***a*-**514***i* in three groups of three spaced substantially equally around the outer circumference of the load sleeve assembly **303** to provide the most even distribution of weight transfer from the load sleeve assembly **303** to the basepipe **302**. However, it should be noted that any number of holes may be utilized to practice the present techniques.

The load sleeve assembly **303** preferably includes a lip portion **510**, a load shoulder **512**, and at least one transport and one packing conduit **508***a*-**508***i* extending through the axial length of the load sleeve assembly **303** between the inner and outer diameter of the load sleeve assembly **303**. The basepipe **302** extends through the load sleeve assembly **303** and at least one alternate fluid flow path **320** extends from at least one of the transport and packing conduits **508***a*-**508***n* down the length of the basepipe **302**. The basepipe **302** is operably attached to the load sleeve assembly **303** to transfer axial, rotational, or other forces from the load sleeve assembly **303** to the basepipe **302**. Nozzle openings **310***a*-**310***e* are positioned at regular intervals along the length of the alternate fluid flow path **320** to facilitate a fluid flow connection between the wellbore **114** annulus and the interior of at least a portion of the alternate fluid flow path **320**. The alternate fluid flow path **320** terminates at the transport or packing conduit (see FIG. **6**) of the torque sleeve assembly **305** and the torque sleeve assembly **305** is fitted over the basepipe **302**. A plurality of axial rods **312***a*-**312***n* are positioned in the alternate fluid flow path **320** and extend along the length of the basepipe **302**. A sand screen **314***a*-**314***f*, is positioned around the joint assembly **300** to filter the passage of gravel, sand particles, and/or other debris from the wellbore **114** annulus to the basepipe **302**. The sand screen may include slotted liners, stand-alone screens (SAS); pre-packed screens; wire-wrapped screens, sintered metal screens, membrane screens, expandable screens and/or wire-mesh screens.

Referring back to FIG. **4**B, in some embodiments of the present techniques, the joint assembly **300** may include a coupling **307** and a coax sleeve **311**, wherein the coupling **307** is operably attached (e.g. a threaded connection, welded connection, fastened connection, or other connection type known in the art) to the basepipe **302** and has approximately the same inner diameter as the basepipe **302** to facilitate fluid flow through the coupling assembly **301**. The coax sleeve **311** is positioned substantially concentrically around the coupling **307** and operably attached (e.g. a threaded connection, welded connection, fastened connection, or other connection type known in the art) to the coupling **307**. The coax sleeve **311** also preferably comprises a first inner lip at its second or downstream end, which mates with the lip portion **510** of the load sleeve assembly **303** to prevent fluid flow between the coax sleeve **311** and the load sleeve assembly **303**. However, it is not necessary for loads to be transferred between the load sleeve assembly **303** and the coax sleeve **311**.

FIG. **6** is an isometric view of an exemplary embodiment of a torque sleeve assembly **305** utilized in the production system **100** of FIG. **1**, the joint assembly **300** of FIGS. **3**A-**3**C, and the coupling assembly **301** of FIGS. **4**A-**4**B in accordance with certain aspects of the present techniques. Accordingly, FIG. **6** may be best understood by concurrently viewing FIGS. **1**, **3**A-**3**C, and **4**A-**4**B. The torque sleeve assembly **305** may be positioned at the downstream or second end of the joint assembly **300** and includes an upstream or first end **602**, a downstream or second end **604**, an inner diameter **606**, at least one transport conduit **608***a*-**608***i*, positioned substantially around and outside the inner diameter **606**, but substantially within an outside diameter. The at least one transport conduit **608***a*-**608***f* extends from the first end **602** to the second end **604**, while the at least one packing conduit **608***g*-**608***i* may terminate before reaching the second end **604**.

In some embodiments, the torque sleeve assembly **305** has beveled edges **616** at the upstream end **602** for easier attachment of the shunt tubes **308** thereto. The preferred embodiment may also incorporate a plurality of radial slots or grooves **612***a*-**612***n*, wherein 'n' may be any integer, in the face of the upstream end **602** to accept a plurality of axial rods **312***a*-**312***n*, wherein 'n' may be any integer. For example, the torque sleeve may have three axial rods **312***a*-**312***c* between each pair of shunt tubes **308***a*-**308***i* for a total of 27 axial rods attached to each torque sleeve assembly **305**. Other embodiments may include none, one, two, or a varying number of axial rods **312***a*-**312***n* between each pair of shunt tubes **308***a*-**308***i*.

In some embodiments of the present techniques the torque sleeve assembly **305** may preferably be operably attached to the basepipe **302** utilizing any mechanism that transfers force from one body to the other, such as by welding, clamping, latching, or other means known in the art. One preferred mechanism for completing this connection is a threaded fastener, for example, a torque bolt, through the torque sleeve assembly **305** into the basepipe **302**. Preferably, the torque sleeve assembly includes radial holes **614***a*-**614***n*, wherein 'n' may be any integer, between the upstream end **602** and the lip portion **610** to accept threaded fasteners therein. For example, there may be nine holes **614***a*-**614***i* in three groups of three, spaced equally around the outer circumference of the torque sleeve assembly **305**. However, it should be noted that other numbers and configurations of holes **614***a*-**614***n* may be utilized to practice the present techniques.

In some embodiments of the present techniques the transport and packing conduits **608***a*-**608***i* are adapted at the upstream end **602** of the torque sleeve assembly **305** to be operably attached, preferably welded, to shunt tubes **308***a*-**308***i*. The shunt tubes **308***a*-**308***i* preferably have a circular cross-section and are positioned around the basepipe **302** at substantially equal intervals to establish a balanced, concentric cross-section of the joint assembly **300**. The conduits **608***a*-**608***i* are configured to operably attach to the downstream ends of the shunt tubes **308***a*-**308***i*, the size and shape of which may vary in accordance with the present teachings. As an example, one preferred embodiment may include six transport conduits **608***a*-**608***f* and three packing conduits **608***g*-**608***i*. However, it should be noted that any number of packing and transport conduits may be utilized to achieve the benefits of the present techniques.

In some embodiments of the present techniques, the torque sleeve assembly **305** may include only transport conduits **608***a*-**608***f* and the packing tubes **308***g*-**308***i* may terminate at or before they reach the second end **604** of the torque sleeve assembly **305**. In a preferred embodiment, the packing conduits **608***g*-**608***i* may terminate in the body of the torque sleeve assembly **305**. In this configuration, the packing conduits **608***g*-**608***i* may be in fluid communication with the exterior of the torque sleeve assembly **305** via at least one

perforation **618**. The perforation **618** may be fitted with a nozzle insert and a back flow prevention device (not shown). In operation, this permits a fluid flow, such as a gravel slurry, to exit the packing tube **608***g*-**608***i* through the perforation **618**, but prevents fluids from flowing back into the packing conduit **608***g*-**608***i* through the perforation **618**.

In some embodiments, the torque sleeve assembly **305** may further consist of a lip portion **610** and a plurality of fluid flow channels **608***a*-**608***i*. When a first and second joint assembly **300***a* and **300***b* (which may include a well tool) of the present techniques are connected, the downstream end of the basepipe **302** of the first joint assembly **300***a* may be operably attached (e.g. a threaded connection, welded connection, fastened connection, or other connection type) to the coupling **307** of the second joint assembly **300***b*. Also, an inner lip of the coax sleeve **311** of the second joint assembly **300***b* mates with the lip portion **610** of the torque sleeve assembly **305** of the first joint assembly **300***a* in such a way as to prevent fluid flow from inside the joint assembly **300** to the wellbore annulus **114** by flowing between the coax sleeve **311** and the torque sleeve assembly **305**. However, it is not necessary for loads to be transferred between the torque sleeve assembly **305** and the coax sleeve **311**.

FIG. **7** is an end view of an exemplary embodiment of one of the plurality of nozzle rings **310***a*-**310***e* utilized in the production system **100** of FIG. **1** and the joint assembly **300** of FIGS. **3**A-**3**C in accordance with certain aspects of the present techniques. Accordingly, FIG. **7** may be best understood by concurrently viewing FIGS. **1** and **3**A-**3**C. This embodiment refers to any or all of the plurality of nozzle rings **310***a*-**310***e*, but will be referred to hereafter as nozzle ring **310**. The nozzle ring **310** is adapted and configured to fit around the basepipe **302** and shunt tubes **308***a*-**308***i*. Preferably, the nozzle ring **310** includes at least one channel **704***a*-**704***i* to accept the at least one shunt tube **308***a*-**308***i*. Each channel **704***a*-**704***i* extends through the nozzle ring **310** from an upstream or first end to a downstream or second end. For each packing tube **308***g*-**308***i*, the nozzle ring **310** includes an opening or hole **702***a*-**702***c*. Each hole, **702***a*-**702***c* extends from an outer surface of the nozzle ring toward a central point of the nozzle ring **310** in the radial direction. Each hole **702***a*-**702***c* interferes with or intersects, at least partially, the at least one channel **704***a*-**704***c* such that they are in fluid flow communication. A wedge (not shown) may be inserted into each hole **702***a*-**702***c* such that a force is applied against a shunt tube **308***g*-**308***i* pressing the shunt tube **308***g*-**308***i* against the opposite side of the channel wall. For each channel **704***a*-**704***i* having an interfering hole **702***a*-**702***c*, there is also an outlet **706***a*-**706***c* extending from the channel wall through the nozzle ring **310**. The outlet **706***a*-**706***c* has a central axis oriented perpendicular to the central axis of the hole **702***a*-**702***c*. Each shunt tube **308***g*-**308***i* inserted through a channel having a hole **702***a*-**702***c* includes a perforation in fluid flow communication with an outlet **706***a*-**706***c* and each outlet **706***a*-**706***c* preferably includes a nozzle insert (not shown).

FIG. **8** is an exemplary flow chart of the method of manufacture of the joint assembly **300** of FIGS. **3**A-**3**C, which includes the coupling assembly **301** of FIGS. **4**A-**4**B, the load sleeve assembly **303** of FIGS. **5**A-**5**B and the torque sleeve assembly **305** of FIG. **6**, and is utilized in the production system **100** of FIG. **1**, in accordance with aspects of the present techniques. Accordingly, the flow chart **800**, may be best understood by concurrently viewing FIGS. **1**, **3**A-**3**C, **4**A-**4**B, **5**A-**5**B, and **6**. It should be understood that the steps of the exemplary embodiment can be accomplished in any order, unless otherwise specified. The method comprises operably attaching a load sleeve assembly **303** having transport and packing conduits **508***a*-**508***i* to the main body portion of the joint assembly **300** at or near the first end thereof, operably attaching a torque sleeve assembly **305** having at least one conduit **608***a*-**608***i* to the main body portion of the joint assembly **300** at or near the second end thereof, and operably attaching a coupling assembly **301** to at least a portion of the first end of the main body portion of the joint assembly **300**, wherein the coupling assembly **301** includes a manifold region **315** in fluid flow communication with the packing and transport conduits **508***a*-**508***i* of the load sleeve assembly **303** and the at least one conduit **608***a*-**608***i* of the torque sleeve assembly **305**.

In some embodiments of the present techniques, the individual components are provided **802** and pre-mounted on or around **804** the basepipe **302**. The coupling **307** is attached **816** and the seals are mounted **817**. The load sleeve assembly **303** is fixed **818** to the basepipe **302** and the sand screen segments **314***a*-**314***n* are mounted. The torque sleeve assembly **305** is fixed **828** to the basepipe **302**, the coupling assembly **301** is assembled **830**, and the nozzle openings **310***a*-**310***e* are completed **838**. The torque sleeve assembly may have transport conduits **608***a*-**608***f*, but may or may not have packing conduits **608***g*-**608***i*.

In a preferred method of manufacturing the joint assembly **300**, the seal surfaces and threads at each end of the basepipe **302** are inspected for scratches, marks, or dents before assembly **803**. Then the load sleeve assembly **303**, torque sleeve assembly **305**, nozzle rings **310***a*-**310***e*, centralizers **316***a*-**316***d*, and weld rings (not shown) are positioned **804** onto the basepipe **302**, preferably by sliding. Note that the shunt tubes **308***a*-**308***i* are fitted to the load sleeve assembly **303** at the upstream or first end of the basepipe **302** and the torque sleeve assembly **305** at the downstream or second end of the basepipe **302**. Once these parts are in place, the shunt tubes **308***a*-**308***i* are tack or spot welded **806** to each of the load sleeve assembly **303** and the torque sleeve assembly **305**. A non-destructive pressure test is performed **808** and if the assembly passes **810**, the manufacturing process continues. If the assembly fails, the welds that failed are repaired **812** and retested **808**.

Once the welds have passed the pressure test, the basepipe **302** is positioned to expose an upstream end and the upstream end is prepared for mounting **814** by cleaning, greasing, and other appropriate preparation techniques known in the art. Next, the sealing devices, such as back-up rings and o-rings, may be slid **814** onto the basepipe **302**. Then, the load ring may be positioned over the basepipe **302** such that it retains the position of the sealing devices **814**. Once the load ring is in place, the coupling **307** may be threaded **815** onto the upstream end of the basepipe **302** and guide pins (not shown) are inserted into the upstream end of the load sleeve assembly **303**, aligning the load ring therewith **816**. The manufacturer may then slide the load sleeve assembly **303** (including the rest of the assembly) over the backup ring and o-ring seals **817** such that the load sleeve **303** is against the load ring, which is against the coupling **307**. The manufacturer may then drill holes into the basepipe **302** through the apertures **514***a*-**514***n*, wherein 'n' may be any integer, of the load sleeve assembly **303** and mount torque bolts **818** to secure the load sleeve assembly **303** to the basepipe **302**. Then, axial rods **312***a*-**312***n* may be aligned parallel with the shunt tubes **308***a*-**308***i* and welded **819** into pre-formed slots in the downstream end of the load sleeve assembly **303**.

Once the axial rods **312***a*-**312***n* are properly secured, screen sections **314***a*-**314***f* may be mounted **820** utilizing a sand screen such as ResLink's LINESLOT™ wire wrap sand screen. The sand screen will extend from the load sleeve

assembly **303** to the first nozzle ring **310***a*, then from the first nozzle ring **310***a* to the second nozzle ring **310***b*, the second nozzle ring **310***b* to the centralizer **316***a* and the third nozzle ring **310***c*, and so on to the torque sleeve assembly **305** until the shunt tubes **308***a*-**308***i* are substantially enclosed along the length of the joint assembly **300**. The weld rings may then be welded into place so as to hold the sand screens **314***a*-**314***f* in place. The manufacturer may check the screen to ensure proper mounting and configuration **822**. If a wire wrap screen is used, the slot opening size may be checked, but this step can be accomplished prior to welding the weld rings. If the sand screens **314***a*-**314***f* check out **824**, then the process continues, otherwise, the screens are repaired or the joint assembly **300** is scrapped **826**. The downstream end of basepipe **302** is prepared for mounting **827** by cleaning, greasing, and other appropriate preparation techniques known in the art. Next, the sealing devices, such as back-up rings and o-rings, may be slid onto the basepipe **302**. Then the torque sleeve assembly **305** may be fixedly attached **828** to the basepipe **302** in a similar manner to the load sleeve assembly **303**. Once the torque sleeve assembly **305** is attached, the sealing devices may be installed between the basepipe **302** and torque sleeve assembly **305** and a seal retainer (not shown) may be mounted and tack welded into place. Note that the steps of fixing the torque sleeve assembly **305** and installing the seals may be conducted before the axial rods **312** are welded into place **819**.

The coax sleeve **311** may be installed **830** at this juncture, although these steps may be accomplished at any time after the load sleeve assembly **303** is fixed to the basepipe **302**. The o-rings and backup rings (not shown) are inserted into an inner lip portion of the coax sleeve **311** at each end of the coax sleeve **311** and torque spacers **309***a*-**309***e* are mounted to an inside surface of the coax sleeve **311** utilizing short socket head screws with the butt end of the torque spacers **309***a*-**309***e* pointing toward the upstream end of the joint assembly **300**. Then the manufacturer may slide the coax sleeve **311** over the coupling **307** and replace the socket head screws with torque bolts **410** having o-rings, wherein at least a portion of the torque bolts **410** extend through the coax sleeve **311**, the torque spacer **309***a*-**309***e*, and into the coupling **307**. However, in one preferred embodiment, a portion of the torque bolts **410** terminate in the torque spacer **309***a*-**309***e* and others extend through the torque spacer **309***a*-**309***e* into the coupling **307**.

Any time after the sand screens **314***a*-**314***f* are installed, the manufacturer may prepare the nozzle rings **310***a*-**310***e*. For each packing shunt tube **308***g*-**308***i*, a wedge (not shown) is inserted into each hole **702***a*-**702***c* located around the outer diameter of the nozzle ring **310***a*-**310***e* generating a force against each packing shunt tube **308***g*-**308***i*. Then, the wedge is welded into place. A pressure test may be conducted **832** and, if passed **834**, the packing shunt tubes **308***g*-**308***i* are perforated **838** by drilling into the tube through an outlet **706***a*-**706***c*. If pressure test **832** is not passed, a defect may be determined and then repaired or replaced **836** such that the apparatus may be retested **832**. In one exemplary embodiment, a **20**mm tube may be perforated by a 8mm drill bit. Then a nozzle insert and a nozzle insert housing (not shown) are installed **840** into each outlet **706***a*-**706***c* and the fabrication is complete **842**. Before shipment, the sand screen is properly packaged and the process is complete.

FIG. **9** is an exemplary flow chart of the method of producing hydrocarbons utilizing the production system **100** of FIG. **1** and the joint assembly **300** of FIG. **3**A-**3**C, in accordance with aspects of the present techniques. Accordingly, this flow chart, which is referred to by reference numeral **900**, may be best understood by concurrently viewing FIGS. **1** and **3**A-**3**C. The process generally comprises providing a production facility at a surface location **902**, providing a subsurface formation **904**, and providing well tools such as described in the exemplary techniques **906**, and making up **908** a plurality of joint assemblies **300** into a production tubing string in accordance with the present techniques as disclosed herein, disposing the string into a wellbore **910** at a productive interval and producing hydrocarbons **916** through the production tubing string to complete the exemplary process **918**.

In a preferred embodiment, an operator may utilize the coupling assembly **301** and joint assembly **300** in combination with a variety of well tools such as a packer **134**, a sand control device **138**, or a shunted blank. The operator may gravel pack **912** a formation or apply a fluid treatment **914** to a formation using any variety of packing techniques known in the art, such as those described in U.S. Provisional Application Nos. 60/765,023 and 60/775,434. Although the present techniques may be utilized with alternate path techniques, they are not limited to such methods of packing, treating or producing hydrocarbons from subterranean formations.

It should also be noted that the coupling mechanism for these packers and sand control devices may include sealing mechanisms as described in U.S. Pat. No. 6,464,261; Intl. Patent Application Pub. Nos. WO2004/046504; WO2004/094769; WO2005/031105; WO2005/042909; U.S. Patent Application Pub. Nos. 2004/0140089; 2005/0028977; 2005/0061501; and U.S. Patent Application Pub. No. 2005/0082060.

In addition, it should be noted that the shunt tubes utilized in the above embodiments may have various geometries. The selection of shunt tube shape relies on space limitations, pressure loss, and burst/collapse capacity. For instance, the shunt tubes may be circular, rectangular, trapezoidal, polygons, or other shapes for different applications. One example of a shunt tube is ExxonMobil's AIIPAC® and AIIFRAC®. Moreover, it should be appreciated that the present techniques may also be utilized for gas breakthroughs as well.

While the present techniques of the invention may be susceptible to various modifications and alternate forms, the exemplary embodiments discussed above have been shown only by way of example. However, it should again be understood that the invention is not intended to be limited to the particular embodiments disclosed herein. Indeed, the present techniques of the invention include all alternatives, modifications, and equivalents falling within the true spirit and scope of the invention as defined by the following appended claims.

What we claim is:

1. A joint assembly comprising:

a main body portion having a first end and a second end;

a load sleeve assembly having an inner diameter, wherein the load sleeve assembly is operably attached to the main body portion at or near the first end, the load sleeve assembly including at least one transport conduit and at least one packing conduit, wherein both the at least one transport conduit and the at least one packing conduit are disposed exterior to the inner diameter;

a torque sleeve assembly having an inner diameter, wherein the torque sleeve assembly is operably attached to the main body portion at or near the second end, the torque sleeve assembly including at least one conduit, wherein the at least one conduit is disposed exterior to the inner diameter;

a coupling assembly operably attached to at least a portion of the first end of the main body portion, the coupling assembly including a coupling and a manifold region, wherein the manifold region is located in an annulus

exterior to the coupling and is at least partially defined by an exterior surface of the coupling and the manifold region is configured to be in fluid flow communication with the at least one transport conduit and at least one packing conduit of the load sleeve assembly.

2. The joint assembly of claim **1**, the coupling assembly comprising the coupling and a coax sleeve, the coupling having an outer diameter and wherein the coax sleeve is disposed substantially concentrically around the outer diameter of the coupling, the volume between the coax sleeve and the coupling forming the manifold region.

3. The joint assembly of claim **2**, the coupling assembly comprising at least one torque spacer positioned at least partially between the coax sleeve and the coupling, wherein the at least one torque spacer is operably attached to the coupling.

4. The joint assembly of claim **3** wherein at least a portion of the main body portion is a basepipe having a first end and a second end, wherein the basepipe is at least partially disposed within the inner diameter of the load sleeve assembly and at least partially disposed within the inner diameter of the torque sleeve assembly, and wherein the coupling is operably attached to the first end of the basepipe.

5. The joint assembly of claim **4**, wherein the at least one conduit of the torque sleeve assembly is comprised of at least one of a transport conduit and a packing conduit.

6. The joint assembly of claim **5**, wherein at least a portion of the main body portion having a primary fluid flow path assembly and an alternate fluid flow path assembly, the alternate fluid flow path assembly configured to be in fluid flow communication with the at least one transport conduit and at least one packing conduit of the load sleeve assembly and the at least one transport conduit and at least one packing conduit of the torque sleeve assembly, wherein the basepipe is the primary fluid flow path assembly.

7. The joint assembly of claim **6**, wherein the load sleeve assembly having an outer diameter and the load sleeve assembly comprising a shoulder portion extending radially outward around the outer diameter of the load sleeve assembly and configured to support a load.

8. The joint assembly of claim **7** wherein the alternate fluid flow path assembly is at least two shunt tubes disposed substantially parallel to the basepipe.

9. The joint assembly of claim **8**, the basepipe having an outer diameter, wherein the outer diameter is gradually reduced at each of the first end and the second end of the basepipe.

10. The joint assembly of claim **8** comprising at least one nozzle ring having an inner diameter axially oriented channels, the at least one nozzle ring is disposed around a portion of the basepipe and between the load sleeve assembly and the torque sleeve assembly, wherein the channels engage the at least two shunt tubes.

11. The joint assembly of claim **10** comprising two nozzle rings, wherein one of the two nozzle rings has an elongated axial body portion configured to receive a centralizer therearound.

12. The joint assembly of claim **8** wherein at least one of the at least two shunt tubes is in fluid flow communication with the at least one transport conduit of the load sleeve assembly and the at least one transport conduit of the torque sleeve assembly, and the remainder of the at least two shunt tubes is in fluid flow communication with the at least one packing conduit of the load sleeve assembly and the at least one packing conduit of the torque sleeve assembly.

13. The joint assembly of claim **12**, the at least one shunt tube in fluid flow communication with the packing conduit of the load sleeve assembly comprising at least one perforation configured to facilitate the passage of fluids, slurries or other flowable substances.

14. The joint assembly of claim **8** comprising a plurality of axial rods, wherein the plurality of axial rods are substantially adjacent to the basepipe and substantially parallel with the at least two shunt tubes.

15. The joint assembly of claim **14** comprising a weld ring disposed substantially around a portion of at least one of the load ring assembly, the torque sleeve assembly, the at least one nozzle ring, or any combination thereof.

16. The joint assembly of claim **15** wherein the weld ring is positioned to at least partially engage at least one of the plurality of axial rods.

17. The joint assembly of claim **16** comprising a sand screen disposed around the basepipe, engages at least one of the plurality of axial rods, and substantially encloses at least a portion of the at least two shunt tubes.

18. The joint assembly of claim **17** wherein the sand screen is one of a slotted pipe, a sintered metal screen, a stand-alone screen, a membrane screen, or a wire-mesh screen.

19. The joint assembly of claim **17** wherein the sand screen is a wire wrap type sand screen.

20. The joint assembly of claim **19** wherein the wire wrap sand screen is fixedly attached to the weld ring.

21. The joint assembly of claim **7** wherein the alternate fluid flow path assembly is a double-walled pipe disposed substantially concentrically around the basepipe.

22. The joint assembly of claim **4** wherein each of the first end and the second end of the basepipe are configured to receive at least one sealing ring.

23. The joint assembly of claim **4** wherein the coupling is operably attached to the basepipe with a threaded connection.

24. The joint assembly of claim **23** wherein the coupling includes at least one socket disposed around an outer diameter of the coupling.

25. The joint assembly of claim **24** wherein the coax sleeve includes at least one hole extending through the coax sleeve in a substantially radial orientation.

26. The joint assembly of claim **25** wherein the coax sleeve is operably attached to the coupling by engaging at least one connector through the at least one hole in the coax sleeve and into the at least one socket of the coupling.

27. The joint assembly of claim **26** wherein the at least one connector is a torque bolt.

28. The joint assembly of claim **27** wherein the torque bolt extends at least partially through the at least one torque spacer.

29. The joint assembly of claim **28** wherein the at least one torque spacer includes at least one indentation, wherein the at least one indentation is configured to engage the at least one connector.

30. The joint assembly of claim **28** wherein the at least one torque spacer includes two indentations, wherein one of the two indentations extends through the torque spacer and the second of the two indentations extends into the torque spacer.

31. The joint assembly of claim **4** including a load ring disposed around the first end of the basepipe and substantially adjacent to the load sleeve assembly.

32. The joint assembly of claim **31**, the load ring having an inner diameter and an outer diameter, and at least two inlets between the inner diameter and outer diameter extending axially through the load ring.

33. The joint assembly of claim **32** wherein at least one of the at least two inlets of the load ring is in fluid flow communication with the at least one transport conduit of the load sleeve assembly and at least one of the at least two inlets of the

load ring is in fluid flow communication with the at least one packing conduit of the load sleeve assembly.

34. The joint assembly of claim **33** wherein the at least one of the at least two inlets of the load ring in fluid flow communication with the at least one transport conduit of the load sleeve assembly is adapted and configured to reduce entry pressure loss.

35. The joint assembly of claim **4** comprising at least one sealing assembly fitted between the basepipe and the load sleeve assembly at or near an upstream end of the load sleeve assembly, wherein the sealing assembly is configured to substantially prevent fluid flow between the basepipe and the load sleeve assembly.

36. The joint assembly of claim **3**, wherein the at least one torque spacer having an aerodynamic profile based on National Advisory Committee for Aeronautics standards.

37. The joint assembly of claim **2** comprising at least one sealing assembly fitted between an inner diameter of the coax sleeve and an outer diameter of the load sleeve assembly, wherein the sealing assembly is configured to substantially prevent fluid flow between the inner diameter of the coax sleeve and the outer diameter of the load sleeve assembly.

38. A method of assembling a joint assembly comprising:

operably attaching a load sleeve assembly to a main body portion at or near a first end of the main body portion, wherein the load sleeve assembly having an inner diameter, the load sleeve including at least one transport conduit and at least one packing conduit, wherein both the at least one transport conduit and the at least one packing conduit are disposed exterior to the inner diameter;

operably attaching a torque sleeve assembly to the main body portion at or near a second end of the main body portion, wherein the torque sleeve assembly having an inner diameter, the torque sleeve including at least one conduit, wherein the at least one conduit is disposed exterior to the inner diameter; and

operably attaching a coupling assembly to at least a portion of the first end of the main body portion, the coupling assembly including a coupling and a manifold region, wherein the manifold region is located in an annulus exterior to the coupling and the manifold region is at least partially defined by an exterior surface of the coupling and is configured to be in fluid flow communication with the at least one transport conduit and at least one packing conduit of the load sleeve assembly.

39. The method of claim **38** comprising operably attaching at least one torque spacer to the coupling assembly, the torque spacer positioned substantially within the manifold region.

40. The method of claim **39**, wherein the coupling assembly is comprised of the coupling operably attached to at least a portion of the first end of the main body portion;

a coax sleeve positioned substantially concentrically around the coupling;

the manifold region positioned substantially between the coax sleeve and the coupling; and

the at least one torque spacer operably connected to the coupling and positioned at least partially between the coupling and the coax sleeve.

41. The method of claim **40**, wherein the at least one conduit of the torque sleeve assembly is comprised of at least one of a transport conduit and a packing conduit.

42. The method of claim **41**, wherein the main body portion is at least partially comprised of a basepipe having a first end and a second end, wherein at least a portion of the basepipe is disposed within the inner diameter of the load sleeve assembly and at least a portion of the basepipe is disposed within the inner diameter of the torque sleeve assembly.

43. The method of claim **42**, wherein the basepipe forms a primary fluid flow path assembly and wherein the main body portion is at least partially comprised of a primary fluid flow path assembly and an alternate fluid flow path assembly, wherein the alternate fluid flow path assembly is configured to be in fluid flow communication with the at least one transport conduit and at least one packing conduit of the load sleeve assembly and in fluid flow communication with the at least one conduit of the torque sleeve assembly.

44. The method of claim **43**, wherein the alternate fluid flow path assembly is comprised of at least one shunt tube, the at least one shunt tube operably attached to a second end of the load sleeve assembly, wherein the at least one shunt tube is in fluid flow communication with each of the at least one transport conduit and at least one packing conduit of the load sleeve assembly.

45. The method of claim **44** comprising operably attaching the at least one shunt tube to a first end of the torque sleeve assembly, wherein the at least one shunt tube is in fluid flow communication with at least one of the at least one transport conduit and the at least one packing conduit of the torque sleeve assembly.

46. The method of claim **45** comprising disposing nozzle openings along each shunt tube in fluid flow communication with the at least one packing conduit of at least one of the load sleeve assembly and the torque sleeve assembly.

47. The method of claim **46** comprising positioning at least one sand screen around at least a portion of the main body portion, wherein the sand screen is configured to enclose the at least one shunt tube.

48. The method of claim **46** further including positioning at least one centralizer around a portion of the main body portion, wherein the centralizer is disposed between the load sleeve assembly and the torque sleeve assembly.

49. The method of claim **44** further comprising positioning a centralizer around at least a portion of the load sleeve assembly, wherein the centralizer is positioned at or near the second end of the load sleeve assembly.

50. The method of claim **44** further including positioning a first weld ring such that at least a portion of the first weld ring covers at least a portion of the load sleeve assembly at or near the second end of the load sleeve assembly.

51. The method of claim **44** further including positioning a plurality of nozzle rings around a portion of the main body portion, wherein the plurality of nozzle rings are disposed between the load sleeve assembly and the torque sleeve assembly.

52. The method of claim **44**, wherein the at least one shunt tube is operably attached to the load sleeve assembly by welding.

53. The method of claim **52** comprising pressure testing the shunt tubes and welded connections between the shunt tubes and the load sleeve assembly.

54. The method of claim **44** wherein the load sleeve assembly comprises a plurality of apertures, wherein the apertures extend radially between a center of the load sleeve assembly and an outer surface of the load sleeve assembly.

55. The method of claim **54** comprising drilling holes in the basepipe through the apertures of the load sleeve assembly.

56. The method of claim **55** comprising inserting threaded connectors through the apertures of the load sleeve assembly into the holes of the basepipe, wherein the threaded connectors are configured to transfer a load from the load sleeve assembly to the basepipe.

57. The method of claim **40**, wherein the coax sleeve is operably attached to the coupling by inserting a plurality of threaded connectors through the coax sleeve into the coupling, wherein the plurality of threaded connectors are configured to maintain rotational rigidity between the coax sleeve and the coupling.

58. The method of claim **38**, wherein the coupling is operably attached to the main body portion by a threaded connection.

* * * * *