US007784532B2

(12) **United States Patent**
Sevre et al.

(10) **Patent No.: US 7,784,532 B2**
(45) **Date of Patent: Aug. 31, 2010**

(54) **SHUNT TUBE FLOWPATHS EXTENDING THROUGH SWELLABLE PACKERS**

(75) Inventors: **Alf K. Sevre**, Houston, TX (US); **Tom R. Koloy**, Sandnes (NO); **Allen Wilkins**, The Woodlands, TX (US); **Rutger Evers**, Stavanger (NO)

(73) Assignee: **Halliburton Energy Services, Inc.**, Houston, TX (US)

(*) Notice: Subject to any disclaimer, the term of this patent is extended or adjusted under 35 U.S.C. 154(b) by 0 days.

(21) Appl. No.: **12/256,063**

(22) Filed: **Oct. 22, 2008**

(65) **Prior Publication Data**

US 2010/0096119 A1 Apr. 22, 2010

(51) **Int. Cl.**
E21B 43/04 (2006.01)
E21B 33/12 (2006.01)
E21B 33/124 (2006.01)

(52) **U.S. Cl.** **166/51**; 166/188

(58) **Field of Classification Search** 166/241.7, 166/118, 180, 183, 206, 51, 386, 387; 277/326, 277/330

See application file for complete search history.

(56) **References Cited**

U.S. PATENT DOCUMENTS

7,143,832	B2	12/2006	Freyer	
7,407,007	B2	8/2008	Tibbles	
2007/0044962	A1 *	3/2007	Tibbles	166/278
2008/0277109	A1 *	11/2008	Vaidya	166/118
2009/0008084	A1 *	1/2009	Dybevik et al.	166/228

FOREIGN PATENT DOCUMENTS

WO	2007092082	A2	8/2007
WO	WO 2007092082	A2 *	8/2007
WO	2007126496	A2	11/2007
WO	2008008687	A1	1/2008
WO	2008036553	A2	3/2008
WO	WO 2008036553	A2 *	3/2008

OTHER PUBLICATIONS

E-Bay Product advertisement, Cowl Vent Drain Hose, Dec. 21, 2008, 3 pages.

International Search Report and Written Opinion issued Nov. 24, 2009, for International Patent Application Serial No. PCT/US09/61148, 7 pages.

* cited by examiner

Primary Examiner—Kenneth Thompson
Assistant Examiner—James G Sayre
(74) *Attorney, Agent, or Firm*—Marlin R. Smith

(57) **ABSTRACT**

Shunt tube flowpaths extending through swellable packers. A well system includes a packer assembly including a base pipe and an annular seal element which is swellable in response to contact with a selected fluid, and a shunt tube flowpath extending through the seal element for delivery of a slurry in a gravel packing operation. A swellable packer assembly includes a base pipe; a swellable annular seal element having a shunt tube flowpath extending through a swellable material; and a valve connected to the flowpath and positioned within the swellable material. Another well system comprises a packer assembly including a base pipe and an annular seal element which is swellable in response to contact with a selected fluid; a shunt tube flowpath extending through a swellable material of the seal element; and a connection between the flowpath and a shunt tube assembly, the connection being positioned within the swellable material.

22 Claims, 7 Drawing Sheets

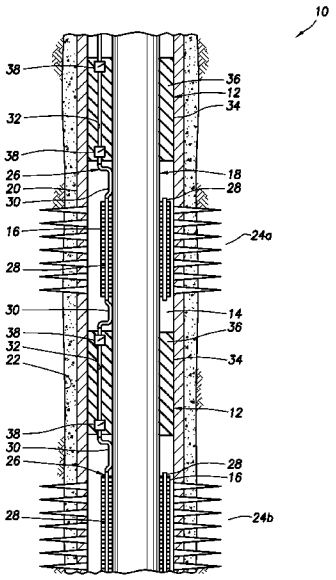

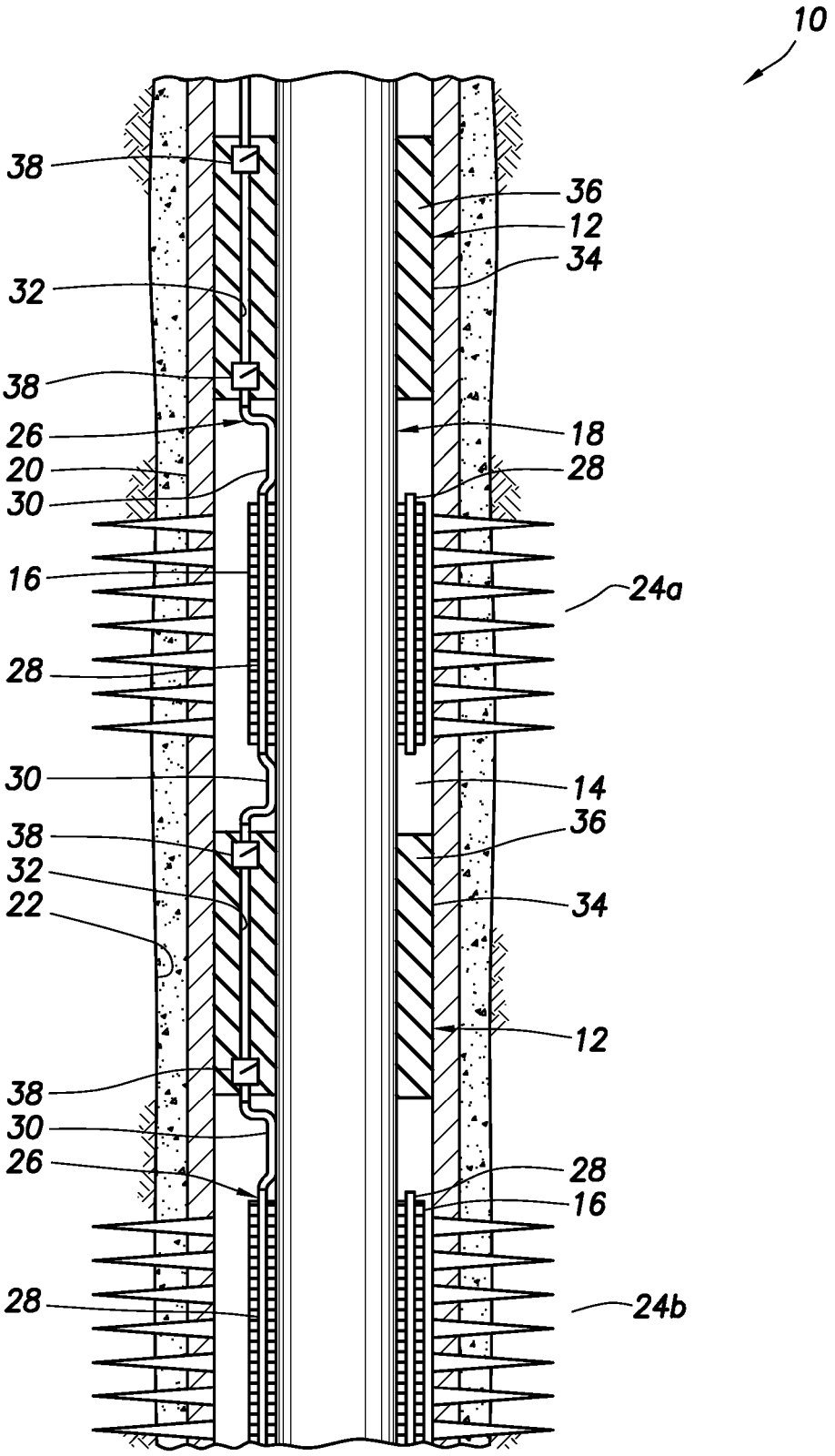
10
38
36
12
34
32
38
26
18
20
28
30
16
24a
28
30
14
38
36
32
34
22
12
38
30
26
28
16
28
24b

FIG. 1

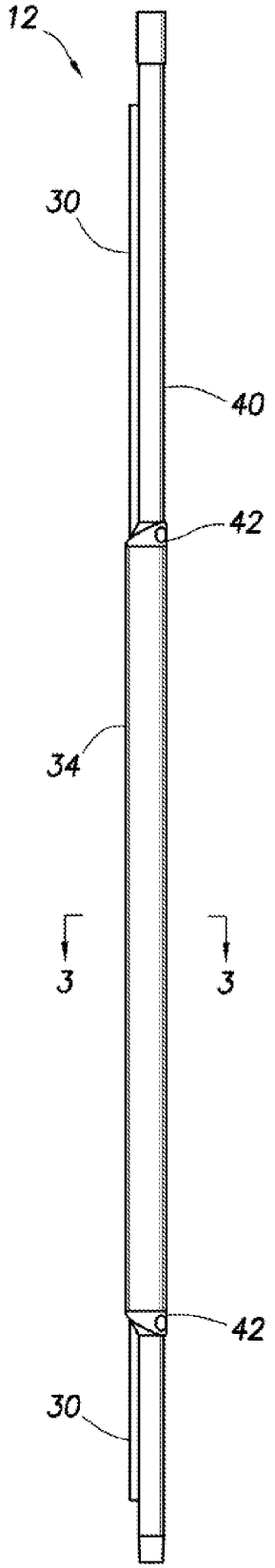

FIG.2

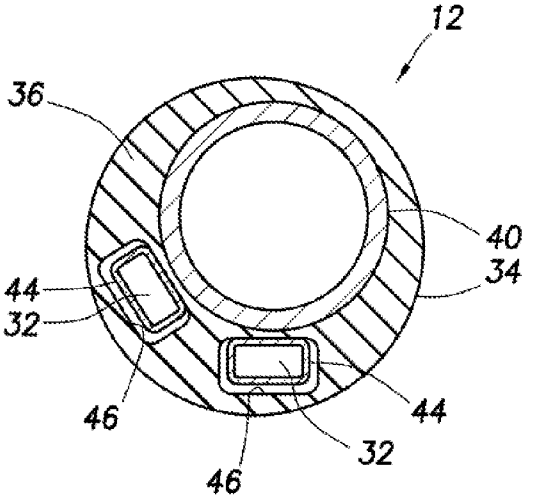

FIG.3

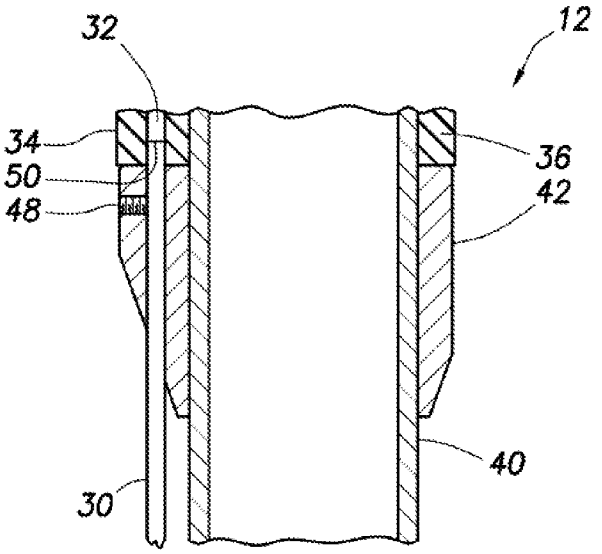

FIG.4

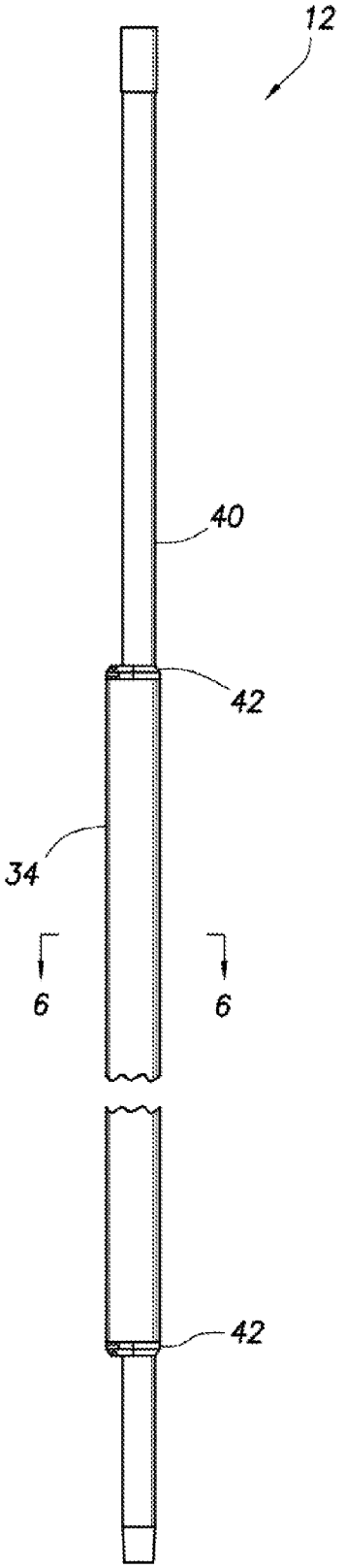

FIG.5

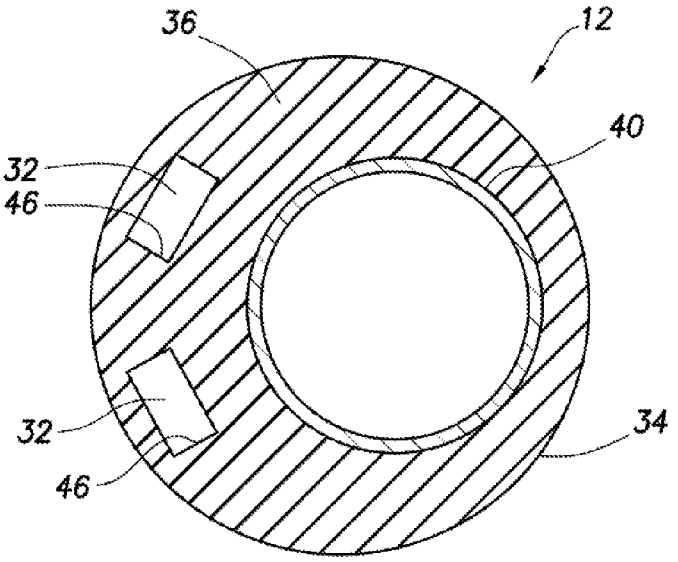

FIG.6

FIG.7

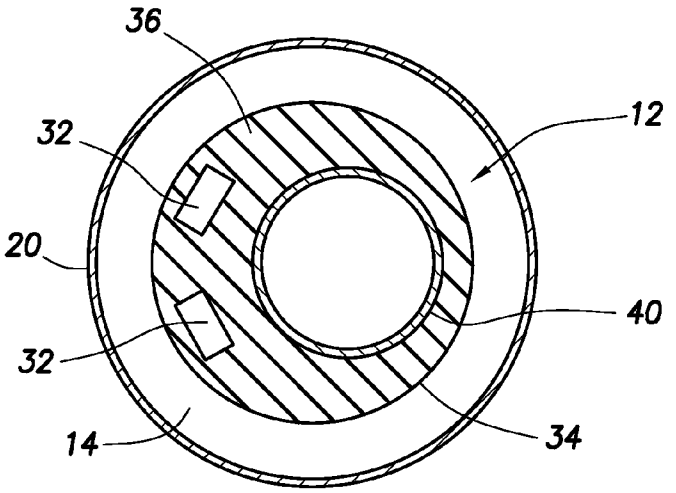

FIG.8

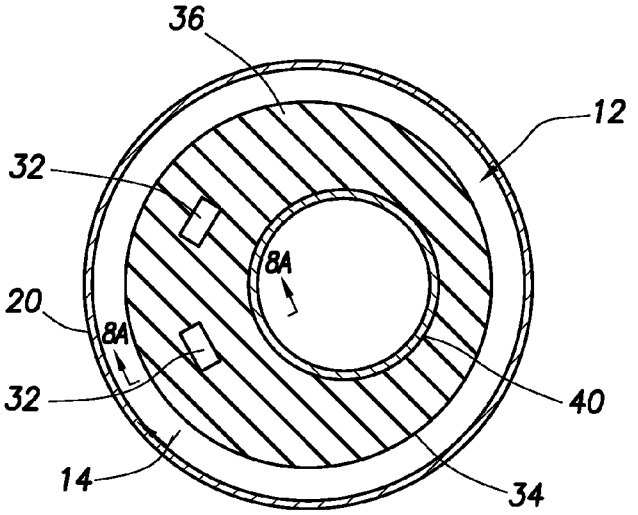

FIG.9

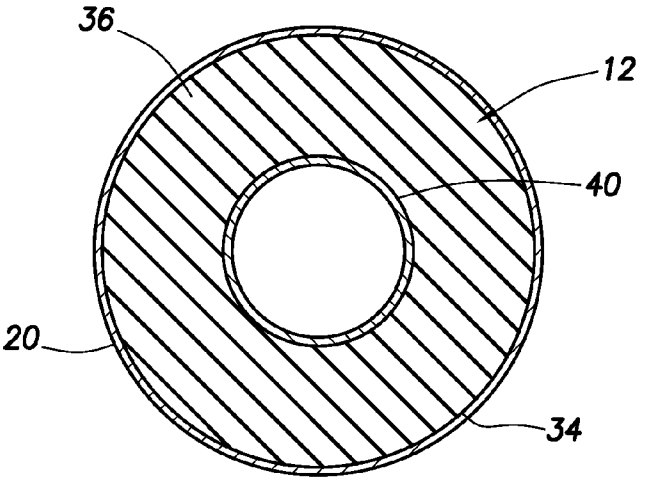

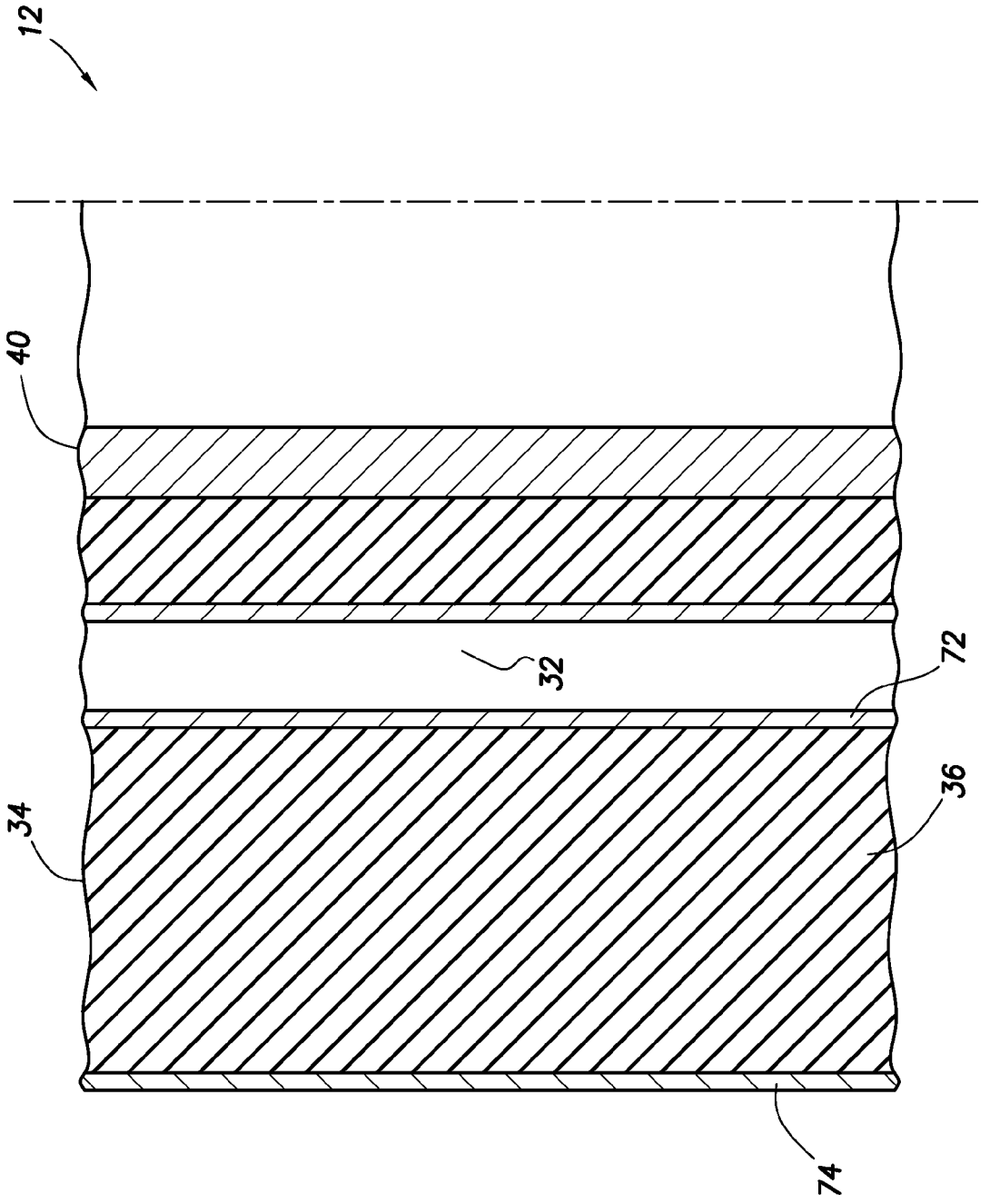

FIG.8A

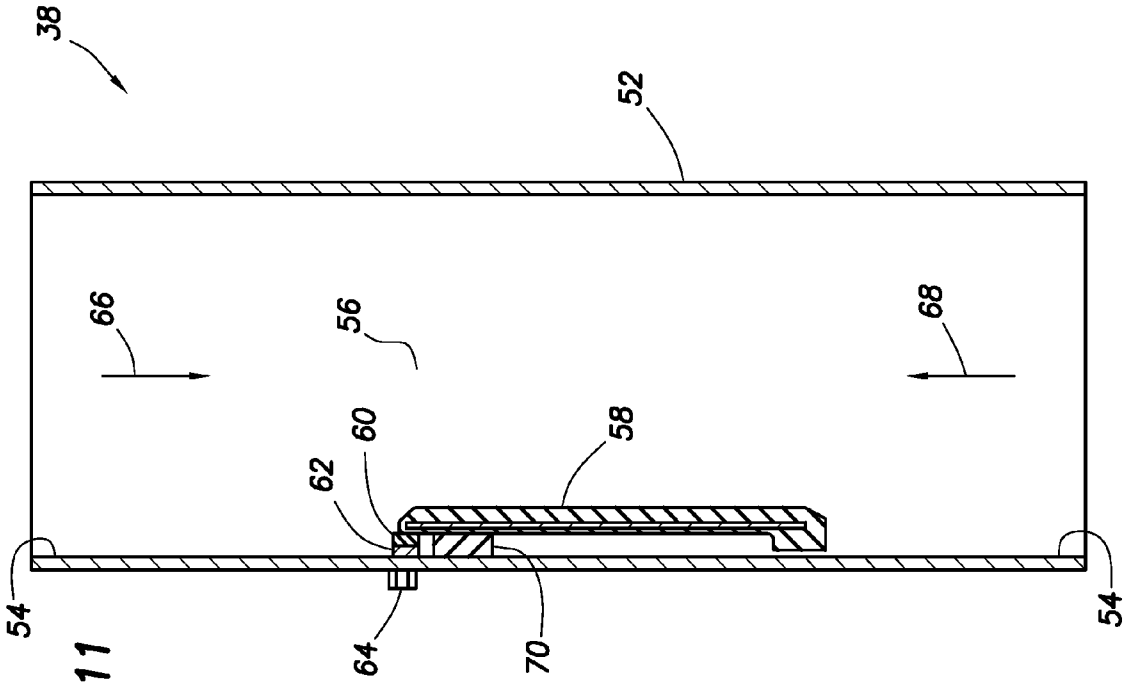

FIG.11

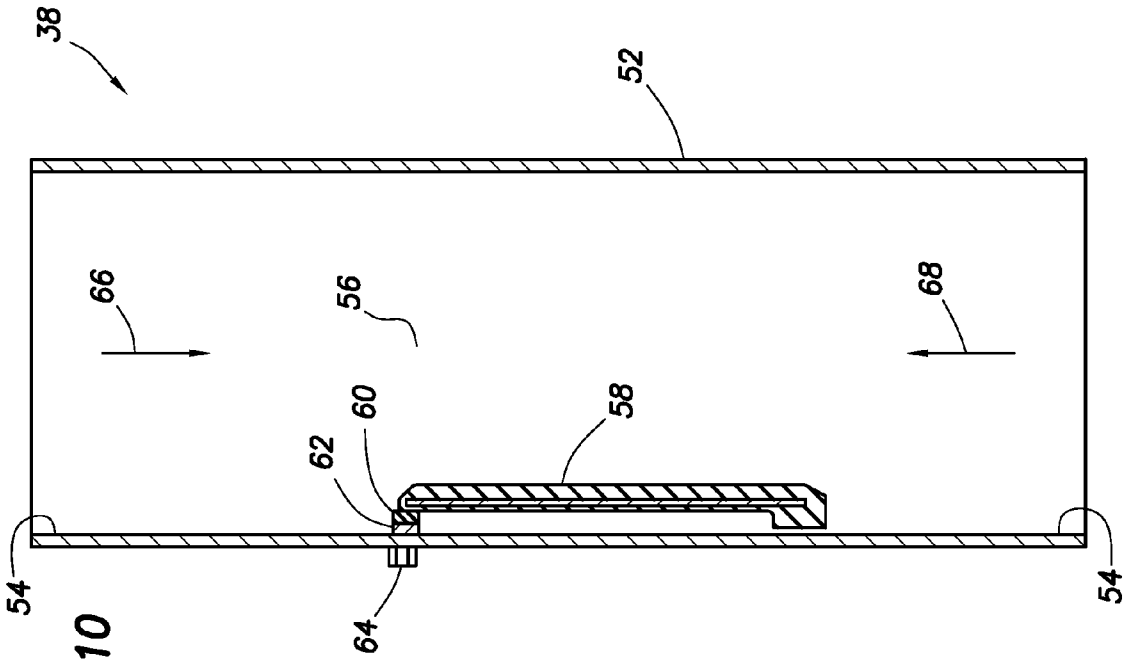

FIG.10

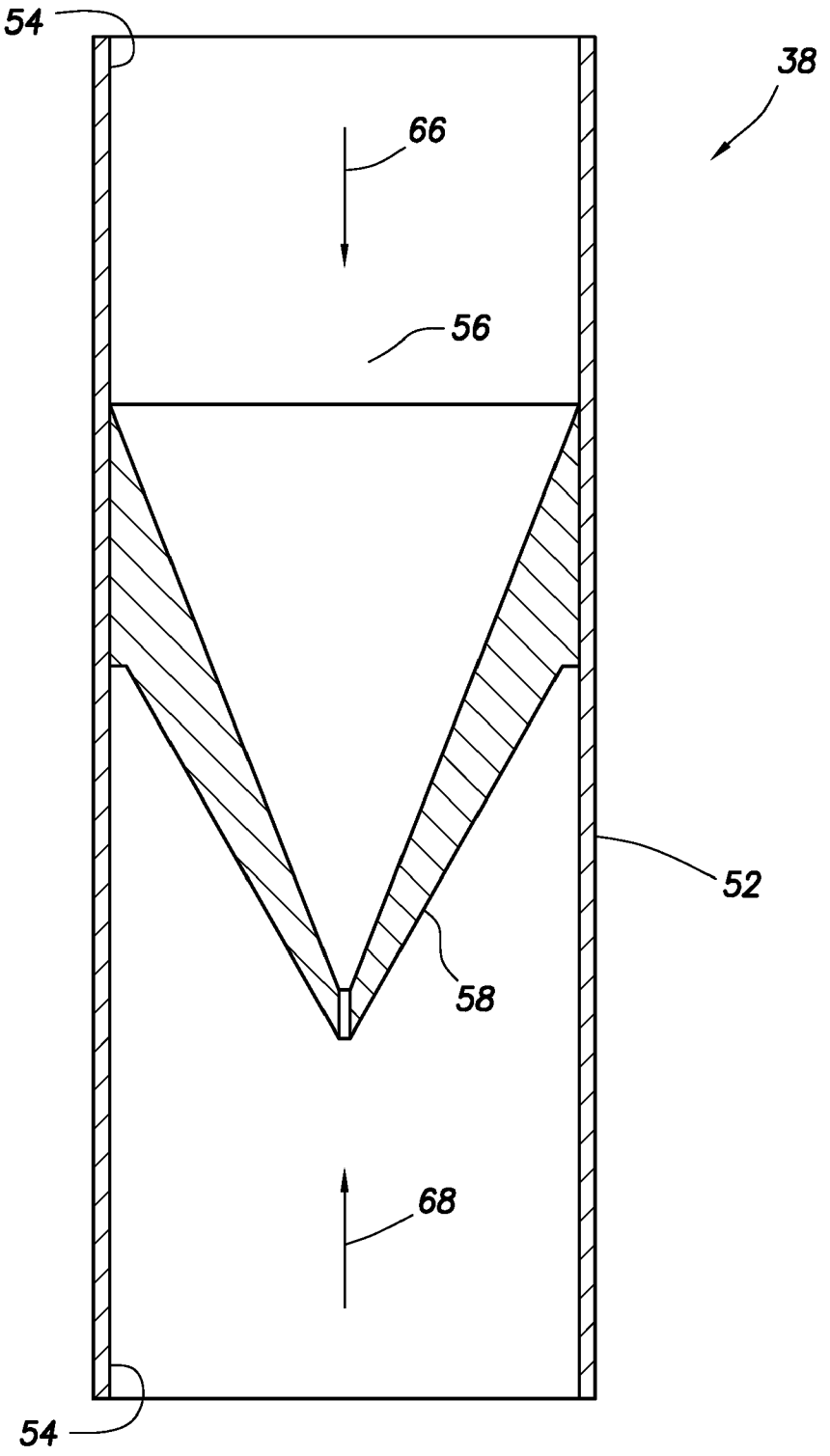

FIG. 12

SHUNT TUBE FLOWPATHS EXTENDING THROUGH SWELLABLE PACKERS

BACKGROUND

The present disclosure relates generally to equipment utilized and operations performed in conjunction with a subterranean well and, in an embodiment described herein, more particularly provides for shunt tube flowpaths extending through swellable packers.

Shunt tubes are used in gravel packing operations to facilitate even distribution of gravel in an annulus between well screens and a wellbore. In some circumstances, it is desirable to close off the annulus between well screens after the gravel packing operation (for example, to provide isolation between gravel packed zones).

Packers can be used to close off the annulus between well screens, but certain problems must be overcome in order to utilize such packers and shunt tubes in a single trip multi-zone gravel packing operation. For example, communication should be provided between shunt tubes on opposite sides of a packer, and this communication should be ceased after the gravel packing operation is completed, in order to provide for isolation between the opposite sides of the packer.

The use of valves made of swellable material and positioned within the shunt tubes on opposite sides of a packer has been proposed. However, such valves restrict flow through the shunt tubes. It has also been proposed to extend the shunt tubes through the interior of a base pipe of the packer, but this restricts flow and access through the interior of the base pipe.

Therefore, it may be seen that improvements are needed in the art of extending shunt tube flowpaths through packers and controlling flow through the flowpaths.

SUMMARY

In the present specification, packer assemblies and well systems are provided which solve at least one problem in the art. One example is described below in which a shunt tube flowpath extends through a swellable material of a seal element on a packer assembly. Another example is described below in which one or more valves, connections, etc. are positioned within the swellable material.

In one aspect, a well system is provided which includes a packer assembly including a base pipe and an annular seal element which is swellable in response to contact with a selected fluid. A shunt tube flowpath extends through the seal element radially between the base pipe and a wellbore for delivery of a slurry in a gravel packing operation.

In another aspect, a swellable packer assembly is provided. The packer assembly includes a generally tubular base pipe and a swellable annular seal element having a shunt tube flowpath extending through a swellable material of the seal element. At least one valve is connected to the flowpath, with the valve being positioned within the swellable material of the seal element.

In yet another aspect, a well system includes a packer assembly with a base pipe and an annular seal element which is swellable in response to contact with a selected fluid. A shunt tube flowpath extends through a swellable material of the seal element. A connection between the flowpath and a shunt tube assembly is positioned within the swellable material of the seal element radially between the base pipe and a wellbore.

In a further aspect, a well system includes a well tool, a shunt tube flowpath extending longitudinally through the well tool, and at least one check valve permitting flow through the flowpath in one direction, but preventing flow through the flowpath in an opposite direction.

These and other features, advantages and benefits will become apparent to one of ordinary skill in the art upon careful consideration of the detailed description of representative embodiments below and the accompanying drawings, in which similar elements are indicated in the various figures using the same reference numbers.

BRIEF DESCRIPTION OF THE DRAWINGS

FIG. **1** is a schematic partially cross-sectional view of a well system embodying principles of the present disclosure;

FIG. **2** is a somewhat enlarged scale elevational view of a packer assembly usable in the well system of FIG. **1**, the packer assembly embodying principles of the present invention;

FIG. **3** is an enlarged scale lateral cross-sectional view of the packer assembly;

FIG. **4** is a partial longitudinal cross-sectional view of the packer assembly;

FIG. **5** is an elevational view of another configuration of the packer assembly;

FIG. **6** is an enlarged scale lateral cross-sectional view of the packer assembly of FIG. **5**;

FIGS. **7-9** are schematic cross-sectional views of successive steps in which shunt tube flowpaths in the packer assembly of FIG. **6** are closed off; and

FIGS. **10-12** are enlarged scale schematic cross-sectional views of valve configurations for use in the packer assembly.

DETAILED DESCRIPTION

It is to be understood that the various embodiments described herein may be utilized in various orientations, such as inclined, inverted, horizontal, vertical, etc., and in various configurations, without departing from the principles of the present disclosure. The embodiments are described merely as examples of useful applications of the principles of the disclosure, which are not limited to any specific details of these embodiments.

In the following description of the representative embodiments of the disclosure, directional terms, such as "above", "below", "upper", "lower", etc., are used for convenience in referring to the accompanying drawings. In general, "above", "upper", "upward" and similar terms refer to a direction toward the earth's surface along a wellbore, and "below", "lower", "downward" and similar terms refer to a direction away from the earth's surface along the wellbore.

Representatively illustrated in FIG. **1** is a well system **10** which embodies principles of the present disclosure. In the well system **10**, swellable packer assemblies **12** are used to close off an annulus **14** longitudinally between well screens **16**.

The annulus **14** is formed radially between a tubular string **18** and casing **20** lining a wellbore **22**. However, if the wellbore **22** were uncased or open hole, then the annulus would be formed between the tubular string **18** and the wellbore **22**.

Although two well screens **16** and two packer assemblies **12** are depicted in FIG. **1** for producing from and isolating two formation zones **24***a,b* intersected by the wellbore **22**, it should be understood that any number and any combination of screens, packers and zones may be present in a well system embodying principles of this disclosure, any number of screens may be positioned between a pair of packer assemblies, and any configuration of these components and the overall system may be used. The principles of this disclosure

are not limited in any way to the particular details of the well system **10**, packer assemblies **12** and screens **16** depicted in FIG. **1**.

Shunt tube assemblies **26** provide for even distribution of gravel when a gravel packing operation is performed. The shunt tube assemblies **26** as depicted in FIG. **1** include shunt tubes **28** extending along the screens **16**, and jumper tubes **30** interconnecting the shunt tubes to flowpaths **32** extending through the packer assemblies **12**.

Multiple shunt tubes **28** may extend along the screens **16**, and any number or combination of the shunt tubes may be in fluid communication with the annulus **14** on either side of the screens. The shunt tubes **28** depicted in FIG. **1** extend longitudinally through a filter portion of each screen **16**, but the shunt tubes could instead, or in addition, extend external or internal to the screens and in any position relative to the filter portion or an external shroud of the screen, as desired.

The shunt tube flowpath **32** extends longitudinally through a swellable seal element **34** of each packer assembly **12**. During the gravel packing operation, the packer assemblies **12** are preferably not sealingly engaged with the casing **20**, and a gravel slurry is permitted to flow through the flowpaths **32** to facilitate even distribution of the slurry in the annulus **14**. Upon contact with a selected fluid, however, a swellable material **36** of the seal element **34** swells, so that the seal element extends radially outward and sealingly engages the casing **20**, thereby closing off the annulus **14** on either side of the screens **16**.

The term "swell" and similar terms (such as "swellable") are used herein to indicate an increase in volume of a material. Typically, this increase in volume is due to incorporation of molecular components of the fluid into the swellable material itself, but other swelling mechanisms or techniques may be used, if desired. Note that swelling is not the same as expanding, although a material may expand as a result of swelling.

For example, in some conventional packers, a seal element may be expanded radially outward by longitudinally compressing the seal element, or by inflating the seal element. In each of these cases, the seal element is expanded without any increase in volume of the material of which the seal element is made. Thus, in these conventional packers, the seal element expands, but does not swell.

The fluid which causes swelling of the swellable material **36** could be water and/or hydrocarbon fluid (such as oil or gas). The fluid could be a gel or a semi-solid material, such as a hydrocarbon-containing wax or paraffin which melts when exposed to increased temperature in a wellbore. In this manner, swelling of the material **36** could be delayed until the material is positioned downhole where a predetermined elevated temperature exists.

The fluid could cause swelling of the swellable material **36** due to passage of time. The fluid which causes swelling of the material **36** could be naturally present in the well, or it could be conveyed with the packer assembly **12**, conveyed separately or flowed into contact with the material **36** in the well when desired. Any manner of contacting the fluid with the material **36** may be used in keeping with the principles of the present disclosure.

Various swellable materials are known to those skilled in the art, which materials swell when contacted with water and/or hydrocarbon fluid, so a comprehensive list of these materials will not be presented here. Partial lists of swellable materials may be found in U.S. Pat. Nos. 3,385,367 and 7,059,415, and in U.S. Published Application No. 2004-0020662, the entire disclosures of which are incorporated herein by this reference.

The swellable material **36** may have a considerable portion of cavities which are compressed or collapsed at the surface condition. Then, when being placed in the well at a higher pressure, the material **36** is expanded by the cavities filling with fluid.

This type of apparatus and method might be used where it is desired to expand the material **36** in the presence of gas rather than oil or water. A suitable swellable material is described in International Application No. PCT/NO2005/000170 (published as WO 2005/116394), the entire disclosure of which is incorporated herein by this reference.

Preferably, the swellable material **36** used in the seal element **34** swells by diffusion of hydrocarbons into the swellable material, or in the case of a water swellable material, by the water being absorbed by a super-absorbent material (such as cellulose, clay, etc.). Hydrocarbon-, water- and gas-swellable materials may be combined in the seal element **34**, if desired.

It should, thus, be clearly understood that any type or combination of swellable material which swells when contacted by any type of fluid may be used in keeping with the principles of this disclosure Swelling of the material **36** may be initiated at any time, but preferably the material swells at least after the packer assembly **12** is installed in the well.

Swelling of the material **36** may be delayed, if desired. For example, a membrane or coating may be on any or all surfaces of the material **36** to thereby delay swelling of the material. The membrane or coating could have a slower rate of swelling, or a slower rate of diffusion of fluid, in order to delay swelling of the material **36**. The membrane or coating could have delayed permeability or could break down in response to exposure to certain amounts of time and/or certain temperatures. Suitable techniques and arrangements for delaying swelling of a swellable material are described in U.S. Pat. No. 7,143,832 and in U.S. Published Application No. 2008-0011473, the entire disclosures of which are incorporated herein by this reference.

When the gravel packing operation is concluded, it is desirable for fluid communication through the flowpath **32** to be prevented, to provide complete isolation between the opposite sides of the packer assemblies **12**. For this purpose, the packer assemblies **12** may include one or more valves **38**. The valves **38** may comprise one-way or check valves, or selectively closeable valves, as described more fully below.

A more detailed elevational view of the packer assembly **12** is representatively illustrated in FIG. **2**. In this view, it may be seen that the packer assembly **12** preferably includes the seal element **34** attached externally to a generally tubular base pipe **40**. End rings **42** secure the seal element **34** against longitudinal displacement relative to the base pipe **40**.

In this example, the seal element **34** is bonded and/or molded onto the base pipe **40**, and the end rings **42** are welded to the base pipe, to thereby form a unitary construction. However, in other examples, the seal element **34** may not be bonded to the base pipe **40** and the end rings **42** may be clamped or otherwise secured to the base pipe, in order to provide for adjustment of the rotational alignment of these components at the time of installation, as described more fully below in conjunction with the description of FIGS. **5** & **6**.

A lateral cross-sectional view of the packer assembly **12**, taken through the seal element **34**, is representatively illustrated in FIG. **3**. In this view, it may be seen that two of the flowpaths **32** extend through the seal element **34** radially between inner and outer surfaces of the seal element. To accommodate the flowpaths **32**, the seal element **34** is laterally offset relative to the base pipe **40**.

In addition, the flowpaths **32** extend through tubular elements **44** positioned in longitudinally extending cavities **46** formed through the seal element **34**. As depicted in FIG. **3**, the cavities **46** may be somewhat larger than the tubular elements **44**, but as the material **36** swells, it will close around and seal against the tubular elements. Alternatively, the cavities **46** may be closely fitted about the tubular elements **44** (e.g., the tubular elements could be bonded or molded within the cavities) prior to the material **36** swelling, if desired.

Although the tubular elements **44** and cavities **46** have a rounded rectangular configuration as depicted in FIG. **3**, any shape may be utilized (e.g., square, circular, oval, etc.), as desired. Any number and combination of flowpaths **32**, tubular elements **44** and cavities **46** may be used in keeping with the principles of this disclosure.

A longitudinal cross-sectional view of the packer assembly **12**, taken through the lower end ring **42**, is representatively illustrated in FIG. **4**. In this view, the jumper tube **30** extends through the end ring **42** and is secured with a set screw **48**. The jumper tube **30** also extends into the seal element **34**, and a connection **50** is thereby made between the flowpath **32** and the jumper tube within the seal element.

The positioning of the connection **50** within the seal element **34** is a very beneficial feature of the packer assembly **12** example of FIGS. **2-4**. In this manner, the connection **50** is not exposed to the annulus **14** (thus avoiding leakage between the flowpath **32** and the annulus), and when the material **36** swells it will reinforce the sealed connection between the flowpath and the jumper tube **30**.

Another configuration of the packer assembly **12** is representatively illustrated in FIGS. **5** & **6**. In this configuration, the flowpaths **32** do not extend through tubular elements **44**. Instead, the flowpaths **32** are in direct contact with the swellable material **36** between inner and outer surfaces of the seal element **34**.

In addition, the end rings **42** are clamped onto the base pipe **40** and the seal element **34** is not bonded to the base pipe. In this manner, the cavities **46** and end rings **42** can be rotationally aligned with the jumper tube **30** (and/or any other portion of the shunt tube assemblies **26**) when the packer assembly **12** is installed, without any need to time or otherwise rotationally align threaded end connections on the base pipe **40**.

In FIGS. **7-9**, a succession of steps in setting the packer assembly **12** in the casing **20** and closing off the flowpaths **32** are representatively illustrated. As discussed above, the packer assembly **12** could be set in an uncased open hole if desired.

In FIG. **7**, the packer assembly **12** is unset. In this configuration, the annulus **14** may be gravel packed about the screens **16** as discussed above. A gravel slurry can flow through the shunt tube flowpaths **32** in the seal element **34** between opposite sides of the packer assembly **12**.

In FIG. **8**, the swellable material **36** has been exposed to the selected fluid which causes the material to swell. As a result, the seal element **34** has swollen somewhat, the annulus **14** is partially closed off, and the flowpaths **32** are partially closed off. However, swelling of the swellable material **36** could be delayed, if desired, using the techniques and arrangements discussed above and/or described in the incorporated documents. In this manner, closing off of the annulus **14** and/or closing off of the flowpaths **32** may be delayed.

In the example depicted in FIG. **8**A, an interior surface of the flowpath **32** is lined with a swell delaying material **72**, and an exterior surface of the seal element **34** is lined with a swell delaying material **74**. The materials **72**, **74** may be of the same type, or they may be different (for example, to alter the relative occurrences of closing off the annulus **14** and closing off the flowpath **32**). Preferably, the materials **72**, **74** are selected so that the annulus **14** is closed off by the seal element **34** prior to the flowpath **32** being closed off, but these occurrences could be simultaneous or in any other order, as desired.

In FIG. **9**, the packer assembly **12** is fully set. The seal element **34** has swollen sufficiently to completely close off the annulus **14** and flowpaths **32**. This provides complete fluid isolation between the zones **24***a,b* in the annulus **14**.

By using the techniques and arrangements discussed above and/or described in the incorporated documents, the annulus **14** could be closed off prior to the flowpaths **32** (or either of them) being closed off by delaying swelling of the material **36** about the flowpaths (or either of them), or the flowpaths (or either of them) could be closed off prior to the annulus being closed off by delaying swelling of the material on an exterior surface of the seal element **34**. In one embodiment, swelling of the material **36** may be delayed to a greater extent at the flowpaths **32** as compared to at the outer margin of the seal element, so that the annulus **14** is closed off prior to the flowpaths **32** being closed off.

When using the packer assembly **12** configuration of FIGS. **5-9**, a separate valve **38** is not needed for selectively preventing flow through the flowpath **32**. However, in FIGS. **10-12**, enlarged scale cross-sectional views of examples of valves **38** suitable for use in the packer assembly **12** configuration of FIGS. **2-4** are representatively illustrated.

In FIG. **10**, the valve **38** includes a generally tubular body **52** which is proportioned to connect to the tubular element **44** at one or both ends. For example, the body **52** may have a rounded rectangular lateral cross-sectional shape to conform to the shape of the tubular element **44** depicted in FIG. **3**, and end connections **54** may be a slip fit onto such a rounded rectangular shape. Preferably, the body **52** is sufficiently large that a passage **56** through the valve **38** does not comprise a restriction in the flowpath **32**.

In one embodiment, the valve body **52** may serve to connect the tubular element **44** to the jumper tube **30** within the seal element **34**, so that each of these connections is made within the seal element. In this manner, the connections **54** will be sealed against leakage and will be reinforced when the material **36** swells.

However, it should be understood that it is not necessary for the valve **38** or the connections **54** (or either of them) to be positioned within the seal element **34** in keeping with the principles of this disclosure. The connections **54** (or either of them) may comprise the connection **50** described above for providing fluid communication between the flowpath **32** and the shunt tube assembly **26**.

A closure member **58** is pivotably arranged in the body **52**. In the example of FIG. **10**, the closure member **58** comprises an elastomer coated metal plate. An elastomer hinge **60** is secured via a metal plate **62** and a fastener **64** to the body **52**.

When fluid flows in the direction indicated by arrow **66**, the passage **56** is open. However, when fluid attempts to flow in the opposite direction indicated by arrow **68**, the closure member **58** pivots across the passage **56** and seals it off, thereby preventing flow through the passage.

Thus, the valve **38** comprises a one-way or check valve. In the well system **10** of FIG. **1**, the valves **38** would permit downward flow of the gravel slurry in the gravel packing operation, but would not permit upward flow of the slurry, or of production fluids thereafter.

In FIG. **11**, the valve **38** is configured similar in many respects to the valve of FIG. **11**. However, a swellable material **70** is positioned between the closure member **58** and the body **52** on a lower side of the hinge **60**.

If the material **70** is secured to both of the closure member **58** and the body **52**, then the valve **38** would not comprise a one-way or check valve, but would instead permit flow in both directions **66**, **68** until the material swells. When exposed to a selected fluid, the material **70** would then swell and cause the closure member **58** to pivot across the passage **56** and thereby prevent flow through the passage in both directions **66**, **68**.

In this manner, the flowpath **32** can be positively closed off after the gravel packing operation. For enhanced sealing capability, one of the valves **38** may be connected at each end of the flowpath **32**, with the valves oriented in opposite directions, so that the closure member **58** pivots across the passage **56** in opposite directions when the material **70** swells. Swelling of the material **70** could be delayed, if desired, using the techniques and arrangements described above and in the incorporated documents.

If the material **70** is not secured to one of the closure member **58** and the body **52**, then the valve **38** would comprise a one-way or check valve and would permit flow in direction **66**, but not in direction **68**, until the material swells. When exposed to a selected fluid, the material **70** would then swell and cause the closure member **58** to pivot across the passage **56** and thereby prevent flow through the passage in both directions **66**, **68**. Again, swelling of the material **70** could be delayed, if desired, using the techniques and arrangements described above and in the incorporated documents.

In FIG. **12**, the valve **38** is similar in some respects to the valve of FIG. **10**. However, instead of the closure member **58** being an elastomer coated metal plate pivotably secured with the hinge **60** to the body **52**, the closure member **58** in FIG. **12** is a one-piece hollow elastomer conical structure.

The closure member **58** permits flow through the passage **56** in the direction **66**, but prevents flow through the passage in the opposite direction **68**. Thus, the valve **38** of FIG. **12** comprises a one-way or check valve.

It may now be fully appreciated that the above disclosure provides many advancements to the art. In particular, this disclosure provides for extending shunt tube flowpaths **32** through a swellable packer assembly **12**. In various embodiments, no flow restriction is presented in the flowpaths **32** or shunt tube assemblies **26**, and no restriction or reduced access is required in the interior of the base pipe **40** of the packer assembly **12**. These benefits are achieved while still providing for isolation in the annulus **14** between screens **16**, and providing for closing off of the flowpaths **32**, after the gravel packing operation.

The above disclosure provides a well system **10** which includes a packer assembly **12** including a base pipe **40** and an annular seal element **34** which is swellable in response to contact with a selected fluid. A shunt tube flowpath **32** extends through the seal element **34** radially between the base pipe **40** and a wellbore **22** for delivery of a slurry in a gravel packing operation.

Swelling of a swellable material **36** of the seal element **34** may be delayed (for example, using swell delaying materials **72**, **74**). Swelling of the swellable material **36** of the seal element **34** may be delayed to a greater extent at the flowpath **32** as compared to at an outer margin of the seal element **34**.

A swellable material **36** of the seal element **34** may be exposed to the flowpath **32** in the seal element The swellable material **36** may swell and thereby prevent fluid flow through the flowpath **32** in response to presence of the selected fluid in the flowpath.

At least one valve **38** may be connected to the flowpath **32** and positioned within the seal element **34**. At least first and second valves **38** may be connected to the flowpath **32** and positioned within the seal element **34**, with the first valve selectively preventing flow through the flowpath in a first direction **66**, and the second valve selectively preventing flow through the flowpath in a second direction **68** opposite to the first direction.

The above disclosure also provides a swellable packer assembly **12** which includes a generally tubular base pipe **40** and a swellable annular seal element **34** having a shunt tube flowpath **32** extending through a swellable material **36** of the seal element **34**. At least one valve **38** may be connected to the flowpath **32**, with the valve being positioned within the swellable material **36** of the seal element **34**.

The at least one valve may comprise at least first and second valves **38** connected to the flowpath **32** and positioned within the swellable material **36**, the first valve selectively preventing flow through the flowpath in a first direction **66**, and the second valve selectively preventing flow through the flowpath in a second direction opposite **68** to the first direction.

The valve **38** may comprise a check valve. The valve **38** may include another swellable material **70** which swells and thereby displaces a closure member **58** to prevent fluid flow through the flowpath **32** in response to presence of a selected fluid in the flowpath.

Also provided by the above disclosure is a well system **10** which includes a packer assembly **12** including a base pipe **40** and an annular seal element **34** which is swellable in response to contact with a selected fluid, a shunt tube flowpath **32** extending through a swellable material **36** of the seal element **34**, and a connection **50** between the flowpath **32** and a shunt tube assembly **26**. The connection **50** is positioned within the swellable material **36** of the seal element **34** radially between the base pipe **40** and a wellbore **22**.

A well system **10** is described above which includes a well tool **12**, a shunt tube flowpath **32** extending longitudinally through the well tool **12**, and at least one check valve **38** permitting flow through the flowpath **32** in one direction **66**, but preventing flow through the flowpath in an opposite direction **68**.

The system **10** may also include another check valve **38**. The multiple check valves **38** may be longitudinally spaced apart along the well tool **12**. The second check valve **38** may permit flow through the flowpath **32** in the one direction **66**, but prevent flow through the flowpath in the opposite direction **68**.

The check valve **38** may close, thereby preventing flow through the flowpath **32** in both directions **66**, **68** in response to contact with a selected fluid.

The well tool may comprise a packer assembly **12**. The packer assembly **12** may include an annular seal element **34** external to a generally tubular base pipe **40**. The flowpath **32** may extend through the seal element **34** external to the base pipe **40** An annular seal element **34** of the packer assembly **12** may be swellable in response to contact with a selected fluid.

Of course, a person skilled in the art would, upon a careful consideration of the above description of representative embodiments, readily appreciate that many modifications, additions, substitutions, deletions, and other changes may be made to these specific embodiments, and such changes are within the scope of the principles of the present disclosure. Accordingly, the foregoing detailed description is to be clearly understood as being given by way of illustration and example only, the spirit and scope of the present invention being limited solely by the appended claims and their equivalents.

What is claimed is:

1. A well system, comprising:

a packer assembly including a base pipe and an annular seal element which is swellable in response to contact with a selected fluid; and

a shunt tube flowpath extending through the seal element radially between the base pipe and a wellbore for delivery of a slurry in a gravel packing operation,

wherein the annular seal element prevents fluid flow through the flowpath after completion of the gravel packing operation.

2. The system of claim **1**, wherein swelling of a swellable material of the seal element is delayed.

3. The system of claim **1**, wherein swelling of a swellable material of the seal element is delayed to a greater extent at the flowpath as compared to at an outer margin of the seal element.

4. The system of claim **1**, wherein a swellable material of the seal element is exposed to the flowpath in the seal element.

5. The system of claim **4**, wherein the swellable material swells and thereby prevents fluid flow through the flowpath in response to contact with the selected fluid.

6. The system of claim **4**, wherein the flowpath is in fluid communication with a shunt tube assembly extending along a well screen in the wellbore.

7. The system of claim **1**, further comprising at least one valve connected to the flowpath and positioned within the seal element.

8. The system of claim **1**, further comprising at least first and second valves connected to the flowpath and positioned within the seal element, the first valve selectively preventing flow through the flowpath in a first direction, and the second valve selectively preventing flow through the flowpath in a second direction opposite to the first direction.

9. A well system, comprising:

a packer assembly including a base pipe and an annular seal element which is swellable in response to contact with a selected fluid; and

a shunt tube flowpath extending through the seal element radially between the base pipe and a wellbore for delivery of a slurry in a gravel packing operation,

wherein the seal element is rotatable about the base pipe to thereby align the flowpath with a shunt tube assembly.

10. A swellable packer assembly, comprising:

a generally tubular base pipe;

a swellable annular seal element having a shunt tube flowpath extending through a first swellable material of the seal element; and

at least one valve connected to the flowpath, the valve being positioned within the first swellable material of the seal element, and the valve including a second swellable material which swells in response to contact with a selected fluid in the flowpath and thereby displaces a rigid closure member which prevents fluid flow through the flowpath in at least one direction.

11. The packer assembly of claim **10**, wherein the at least one valve comprises at least first and second valves connected to the flowpath and positioned within the first swellable material, the first valve selectively preventing flow through the flowpath in a first direction, and the second valve selectively preventing flow through the flowpath in a second direction opposite to the first direction.

12. The packer assembly of claim **10**, wherein the flowpath extends through a generally tubular element in the seal element.

13. The packer assembly of claim **10**, wherein the first swellable material of the seal element is exposed to the flowpath in the seal element.

14. The packer assembly of claim **13**, wherein the first swellable material swells and thereby prevents fluid flow through the flowpath in response to contact with a selected fluid.

15. The packer assembly of claim **10**, wherein the valve comprises a check valve.

16. A well system, comprising:

a packer assembly including a base pipe and an annular seal element which is swellable in response to contact with a selected fluid;

a shunt tube flowpath extending through a swellable material of the annular seal element, the annular seal element selectively preventing fluid flow through the shunt tube flowpath; and

a connection between the flowpath and a shunt tube assembly, the connection being positioned within the swellable material of the seal element radially between the base pipe and a wellbore.

17. The system of claim **16**, wherein the flowpath extends through a generally tubular element in the seal element.

18. The system of claim **17**, wherein the shunt tube assembly extends along a well screen in the wellbore.

19. The system of claim **16**, wherein the swellable material of the seal element is exposed to the flowpath in the seal element.

20. The system of claim **19**, wherein the swellable material swells and thereby prevents fluid flow through the flowpath in response to contact with the selected fluid.

21. The system of claim **16**, further comprising at least one valve connected to the flowpath and positioned within the swellable material.

22. The system of claim **16**, further comprising at least first and second valves connected to the flowpath and positioned within the seal element, the first valve selectively preventing flow through the flowpath in a first direction, and the second valve selectively preventing flow through the flowpath in a second direction opposite to the first direction.

* * * * *