Trials@uspto.gov
571-272-7822

Paper: 38
Date: December 9, 2025

UNITED STATES PATENT AND TRADEMARK OFFICE

BEFORE THE PATENT TRIAL AND APPEAL BOARD

WEATHERFORD U.S., L.P,
Petitioner,

v.

HALLIBURTON ENERGY SERVICES, INC.,
Patent Owner.

IPR2024-00990
Patent 11,333,007 B2

Before FRANCES L. IPPOLITO, ROBERT L. KINDER, and BRENT M. DOUGAL, *Administrative Patent Judges.*

DOUGAL, *Administrative Patent Judge*.

JUDGMENT
Final Written Decision
Determining Some Challenged Claims Unpatentable
Denying Patent Owner's Motion to Amend
35 U.S.C. § 318(a)

I. INTRODUCTION

A. Background

Weatherford U.S., L.P. ("Petitioner") filed a Petition (Paper 1, "Pet.") requesting *inter partes* review of claims 1–12 and 14–23 ("challenged claims") of U.S. Patent 11,333,007 B2 (Ex. 1001, "the '007 patent"). Applying the standard set forth in 35 U.S.C. § 314(a), we instituted an *inter partes* review of all challenged claims. Paper 7 ("Dec.").

Halliburton Energy Services, Inc. ("Patent Owner") filed a Response (Paper 10, "PO Resp."), Petitioner filed a Reply (Paper 16 "Reply"), and Patent Owner filed a Sur-reply (Paper 20, "Sur-reply").

Patent Owner also filed a Motion to Amend. Paper 11. Petitioner filed an Opposition to the Motion. Paper 17 ("Opposition" or "Opp."). We issued Preliminary Guidance on the Motion. Paper 19.

Patent Owner then filed a Revised Motion to Amend. Paper 21 ("Revised Motion" or "RMTA"). The revised Motion requests that if any of claims 3, 6–9, 11, 12, and 14–23 are found unpatentable, they should be replaced by substitute claims 24–40 ("proposed substitute claims" or "proposed claims"). RMTA 1–2, Claims App. Petitioner filed an Opposition to the Revised Motion to Amend (Paper 26, "Opp. RMTA"), Patent Owner filed a Reply (Paper 30, "PO Reply"), and Petitioner filed a Sur-reply (Paper 33, "Pet. Sur-reply").

An oral hearing was held on October 22, 2025, and a copy of the transcript is in the record. Paper 37 ("Tr.").

We have jurisdiction under 35 U.S.C. § 6. This Decision is a Final Written Decision under 35 U.S.C. § 318(a) and 37 C.F.R. § 42.73 as to the patentability of the challenged claims. Having reviewed the arguments and supporting evidence, we determine that Petitioner has not shown by a

preponderance of the evidence, that claims 1–10 and 21–23 are unpatentable, but has shown that claims 11, 12, and 14–20 are unpatentable. We further determine that Petitioner has established by a preponderance of the evidence that proposed substitute claims 29–37 are unpatentable.

B. Related Matters

The parties identify the following district court litigation as involving the ’007 patent: *Halliburton Energy Services, Inc. et al. v. Weatherford U.S.*, No. 6:24-cv00090 (W.D. La. 2024). Pet. 83; Paper 3, 2.

C. The ’007 Patent

The ’007 patent, titled “Multiple Shunt Pressure Assembly For Gravel Packing,” relates to “screen assemblies of lower production systems used in wellbore gravel packing, and more particularly to shunt tube systems utilized in the sand screen assemblies.” Ex. 1001, code (54), 1:17–20.

The ’007 patent explains that “[d]uring production of the formation fluid, formation sand may be swept into the flow path of the production fluid as it passes along [a production] tubing string. The formation sand tends to be relatively fine sand that can erode production components in the flow path.” *Id.* at 1:25–30. When this is expected to occur, one or more lower production assemblies, including a perforated base pipe surrounded by a sand screen to filter fines (i.e. finely crushed or powdered material) from the formation fluid, may be installed. *Id.* at 1:31–36. “The annulus around the sand screen can then be ‘gravel packed’ with a relatively coarse sand (or gravel) which acts as a filter to reduce the amount of fine formation sand reaching the screen.” *Id.* at 1:39–42.

The ’007 patent describes, via Figure 1 reproduced below, a completion assembly (82) in a horizontal portion of a wellbore (12) extending “through various earth strata in an oil and gas formation 14 [from

which hydrocarbons are produced] located below the earth's surface 16." *Id.* at 3:42–43.

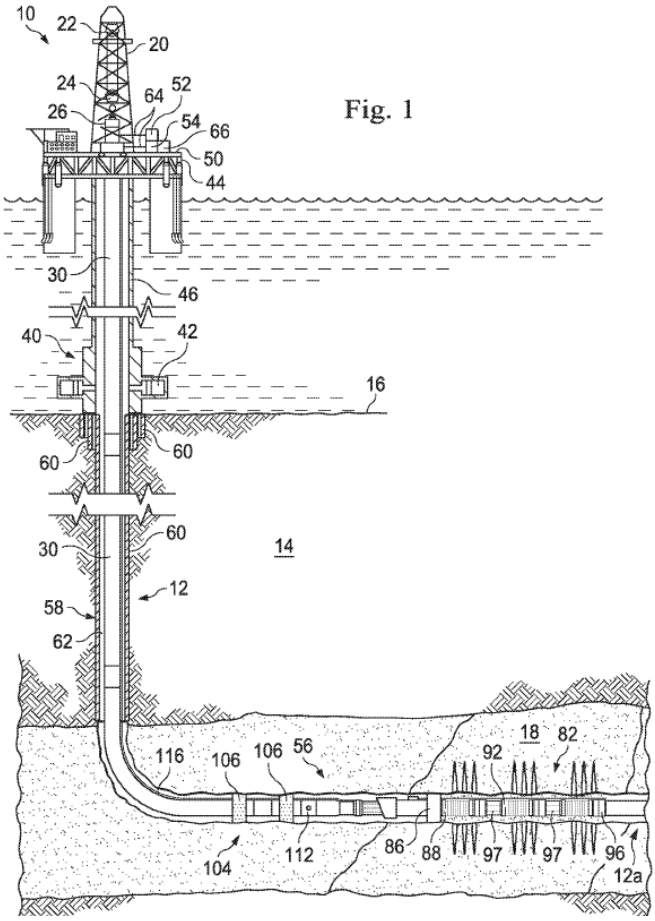

Figure 1 shows the lower completion assembly (82) comprising a packer (86), first upper and second lower sand screen assemblies (88, 96), and a shunt tube system (97) in which each sand screen assembly includes a transport tube and a packing tube, where each packing tube includes a plurality of nozzles. *Id.* at 3:13–16, 4:44–47.

As shown in Figure 2 of the '007 patent, reproduced below, the lower completion assembly (82) comprises interconnected first (202) and second sand screen assemblies (204). *Id.* at 5:6–9.

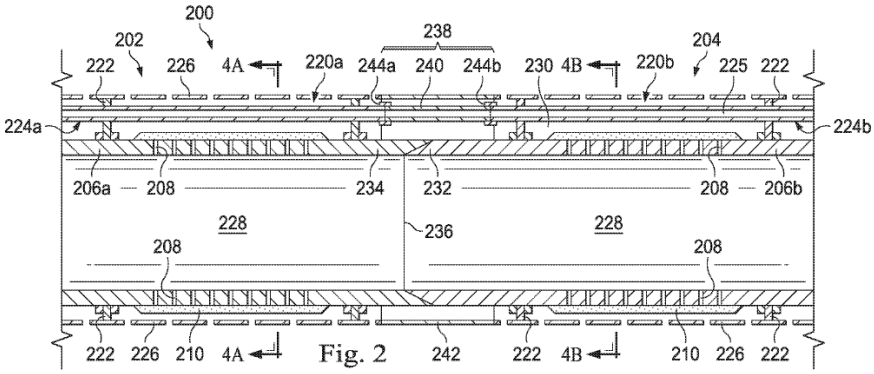

Fig. 2

In Figure 2, each sand screen assembly includes a perforated (208) base pipe (206) and a shunt tube assembly (220) disposed outwardly of filter media (220). *Id*. at 5:14–16. "[T]he base pipe 206 may be slotted and/or include perforations of any shape so long as the perforations permit fluid communication of production fluid between an interior throughbore 228 and an exterior 230 of the screen assembly." *Id*. at 5:37–40. The shunt tubes (224) are "in the form of a transport tube or a packing tube disposed along and generally parallel to the base pipe 206." *Id*. at 5:24–26.

Figure 4A, reproduced below, shows a cross-section of the first sand screen assembly (202) and the shunt tubes (224) arranged to one side of the base pipe (206a) and "having an eccentric alignment." *Id.* at 7:30–31, 46–47.

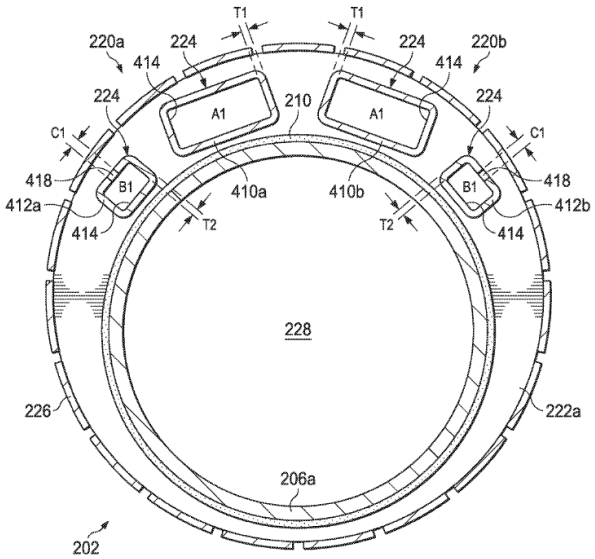

Fig. 4A

In Figure 4, the two shunt tube assemblies (220a and 220b) each comprise a transport tube 410 and a packing tube 412. *Id*. at 7:49–51. Each packing tube further includes one or more nozzles 418 through which fluids may flow to facilitate gravel packing. *Id*. at 7:55–57.

D. Illustrative Claim

Claims 1, 11, 14, and 21 are independent claims. Claim 1 is reproduced below. Bracketing consistent with the Petition is added to assist in referring to the claim elements. Pet. 32–43.

> 1.[preamble] A completion assembly for deployment in a wellbore, the completion assembly comprising:
>
> 1[a] a first sand screen assembly comprising a base pipe having perforations therein and extending between a first end and a second ends, a sand screen disposed around a portion of the base pipe, and a shunt tube assembly disposed outwardly of the sand screen, the shunt tube assembly having a transport tube and a packing tube, where each of the tubes has a passageway defined therein, the packing tube further including a plurality of nozzles spaced apart from each other, wherein each of the tubes and each nozzle has a cross-sectional flow area;
>
> 1[b] a second sand screen assembly comprising a base pipe having perforations therein and extending between a first end and a second ends, a sand screen disposed around a portion of the base pipe, and a shunt tube assembly disposed outwardly of the sand screen, the shunt tube assembly having a transport tube and a packing tube, the packing tube including a plurality of nozzles spaced apart from each other, wherein each of the tubes and each nozzle has a cross-sectional flow area;
>
> 1[c] a source of pressurized working fluid fluidly coupled to an upstream end of the transport tube of the first sand screen assembly;
>
> 1[d] wherein the first and second sand screen assemblies are arranged end to end relative to one another so that the base pipes are in fluid communication with one another and the transport tubes are in fluid communication with one another such

> that the transport tube of the second sand screen assembly is fluidly coupled to the source of pressurized working fluid downstream of the transport tube of the first sand screen assembly; and
>
> 1[e] wherein the transport tube of the first sand screen assembly has a first wall thickness and the transport tube of the second sand screen assembly has a second wall thickness, the first wall thickness being greater than the second wall thickness.

Ex. 1001, 18:17–55.

E. Asserted References and Instituted Grounds

Petitioner's grounds of unpatentability rely on the following references:

Name	Reference	Exhibit
Yeh	U.S. 9,797,226 B2 (Oct. 24, 2017)	1005
Yeh2	C. S. Yeh, at al., "Unlocking the Limits of Extreme Length in Alternate Path Gravel Packing," IPTC 12549, Int'l Petroleum Tech. Conf., 2008	1006
Jones	U.S. 4,945,991 (Aug. 7, 1990)	1007
Jones2	U.S. 5,113,935 (May 19, 1992)	1008

Petitioner also relies on the Declaration of Michael R. Chambers, Sr. (Ex. 1003), as support for the various contentions. Patent Owner relies on Declaration of Dr. Robert A. Durham (Ex. 2002), as support for its various contentions.

Petitioner contends that the challenged claims would have been unpatentable on the following ground(s):

Claim(s) Challenged	35 U.S.C. §	Reference(s)/Basis
1–12	103	Yeh, Yeh2
14–20	103	Yeh, Yeh2, Jones2
21, 22	103	Yeh, Jones
23	103	Yeh, Jones, Yeh2

II. ANALYSIS

A. Legal Standards

Petitioner bears the burden to demonstrate unpatentability. *Dynamic Drinkware, LLC v. Nat'l Graphics, Inc.*, 800 F.3d 1375, 1378 (Fed. Cir. 2015).

A claim is unpatentable as obvious under 35 U.S.C. 103 if "the differences between the subject matter sought to be patented and the prior art are such that the subject matter as a whole would have been obvious at the time the invention was made to a person having ordinary skill in the art to which said subject matter pertains." *KSR Int'l Co. v. Teleflex Inc.*, 550 U.S. 398, 406 (2007) (quoting 35 U.S.C. § 103(a)). We resolve the question of obviousness based on underlying factual determinations, including: (1) the scope and content of the prior art; (2) any differences between the prior art and the claims; (3) the level of skill in the art; and (4) when in evidence, objective indicia of obviousness or nonobviousness.[1] *See Graham v. John Deere Co.*, 383 U.S. 1, 17–18 (1966).

B. Level of Ordinary Skill

The level of skill is uncontested. Patent Owner adopts the level of skill identified by Petitioner as:

> [at] the time of the alleged invention in 2018, a POSITA[2] would have had a B.S. degree in mechanical or petroleum engineering or a similar technical discipline, with at least five years of experience in oil or gas well drilling, completion, and/or subsurface production operations or in technical support of such operations including at least some experience in unconsolidated formations utilizing sand control methods and means. Also,

---

[1] Neither party has presented evidence or argument directed to secondary considerations.
[2] Person of ordinary skill in the art.

> additional education in a relevant technical discipline could compensate for less experience in the relevant field, and vice versa.

Pet. 31–32 (citing Ex. 1003 ¶¶ 36–40); PO Resp. 2.

C. Claim Construction

We only address claim construction arguments if necessary to resolve the dispute. *See Realtime Data, LLC v. Iancu*, 912 F.3d 1368, 1375 (Fed. Cir. 2019) ("The Board is required to construe 'only those terms . . . that are in controversy, and only to the extent necessary to resolve the controversy.'" (quoting *Vivid Techs., Inc. v. Am. Sci. & Eng'g, Inc.*, 200 F.3d 795, 803 (Fed. Cir. 1999))). Here, neither party offers any claim constructions. *See* Pet. 29; PO Resp. 3.

D. Claims 1–12, 21–23 – Obviousness over Yeh in view of Yeh2 and/or Jones

Petitioner argues that Yeh and Yeh2 render obvious claims 1–12. Pet. 35–65. Petitioner argues that claims 21 and 22 are obvious over the combination of Yeh and Jones. *Id.* at 76–79. Petitioner argues that claim 23 is obvious over the combination of Yeh, Yeh2, and Jones. *Id.* at 79. Patent Owner disagrees with respect to claims 1–10 and 21–23, but does not address claims 11 and 12. PO Resp. 10–37, 38–42. In our analysis below, we determine that Petitioner has not shown by a preponderance of the evidence that claims 1–10 and 21–23 are unpatentable. At the same time, we determine that Petitioner has shown that claims 11 and 12 are unpatentable.

1. Yeh

Yeh is titled "Crossover Joint for Connecting Eccentric Flow Paths to Concentric Flow Paths," and relates to the use of screens and gravel packs in wellbores. Ex. 1005, code (54), 1:28–30. Yeh explains that:

> A sand control device typically includes an elongated tubular body, known as a base pipe, having numerous slotted openings. The base pipe is then typically wrapped with a filtration medium such as a screen or wire mesh. To augment sand control devices, particularly in open hole completions, it is common to install a gravel pack.

Id. at 2:37–43. Yeh teaches a cross-over joint used to connect sand control devices having a concentric primary flow path to sand control devices having an eccentric primary flow path. *Id.* at 3:60–62.

2. Yeh2

Yeh2 describes an "Alternate Path® technology (APT)" which "is a field-proven gravel packing technique for multi-zone, long interval, or horizontal wells." Ex. 1006, 1. Yeh2 explains that

> In challenging well environments (e.g., deepwater, extended reach drilling), conventional gravel packing methods are often terminated prematurely due to sand bridging in the wellbore, resulting in incomplete gravel packing and decreased protection from sand ingress. APT provides alternate flow paths around a sand bridge by diverting the slurry (gravel + carrier fluid) through shunt tubes. The slurry is delivered to the annular voids through distributed nozzles in the shunt tubes until a complete pack is placed in the wellbore.

Id. "Shunt tubes remain inactive until the annulus is blocked during the gravel pack operation. APT diverts flow through the shunt tubes and by-passes any blockage, such as a premature sand bridge, to continue gravel packing" as shown in Figure 1, reproduced below. *Id.* at 2.

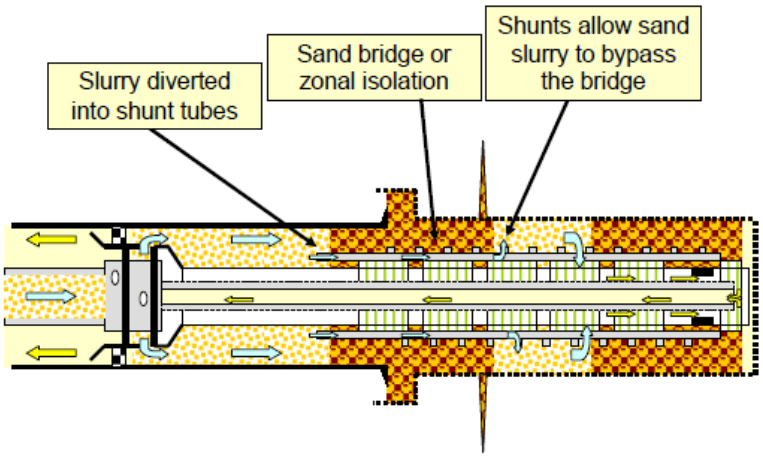

Figure 1 Alternate Path gravel packing with shunt tubes

Figure 1 of Yeh2 shows shunt tubes diverting slurry through distributed portholes to fill annular voids until a complete pack is placed.

Yeh2 explains that "[d]ue to prolonged shunt diversion and higher pressure in extreme length applications, leakoff through a packed packing tube [] may be excessive and could allow gravel accumulation in the manifold." *Id.* at 5. Yeh2 provides an example "of gravel packing a 5,000 ft horizontal well with the multiple-shunt manifold system." *Id*. at Fig. 15. Figure 15, reproduced below, shows the predicted pressure, rate, and gravel concentration profile in the shunt tubes over the 5,000 ft interval. According to Yeh2, "[b]urst strength of shunt tubes must therefore be capable of accommodating this high hydraulic pressure." *Id*.

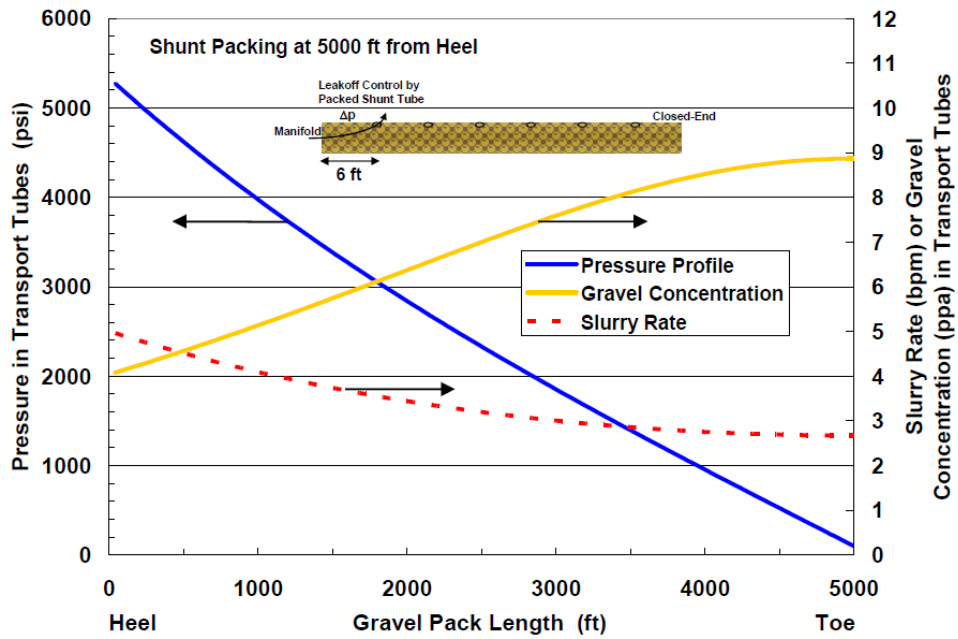

Figure 15 Gravel packing 5,000 ft with multiple-shunt manifold system

Yeh2 Figure 15 shows the predicted pressure, rate, and gravel concentration profile in shunt tubes over a 5,000 ft interval.

3. Jones

Jones is directed to gravel packing a wellbore. Ex. 1007, code (57). Jones explains that a slurry of gravel is injected down a well casing through a work string into a cross-over tool (having a port) in fluid communication with an annular section above a gravel packer. *Id.* at 2:36–55. Jones further teaches that although the conduit for gravel packing "may be made of any pressure-resistant material, it is preferably to be made of stainless steel. *Id.* at 4:11–13.

4. Independent Claim 1

Petitioner argues that Yeh and Yeh2 render obvious claim 1. Pet. 32–43. Patent Owner disagrees, focusing their argument on element 1[e]. PO Resp. 11–37. We first address the uncontested limitations.

a) Uncontested Limitations

Patent Owner does not address the preamble or elements 1[a]–1[d]. Petitioner contends that the combination of Yeh and Yeh2 render these elements obvious. Pet. 32–40. For example, Petitioner looks to Yeh's embodiment in a "5,000-feet horizontal wellbore"[3] and argues that "Yeh taught that an example completion assembly can be 'concentric screen → crossover tool → eccentric screen' wherein the crossover tool connects the primary and secondary flow paths of the sand screens." *Id.* at 32, 33 (quoting Ex. 1005, 30:13–14) (citing Ex. 1005, 25:41–65; Ex. 1003 ¶¶ 262–63). For the first sand screen assembly, Petitioner provides an annotated version of Yeh's concentric screen in Figures 4A and 4B, reproduced below. *Id.* at 33–34 (citing, *inter alia*, Ex. 1003 ¶¶ 260–70).

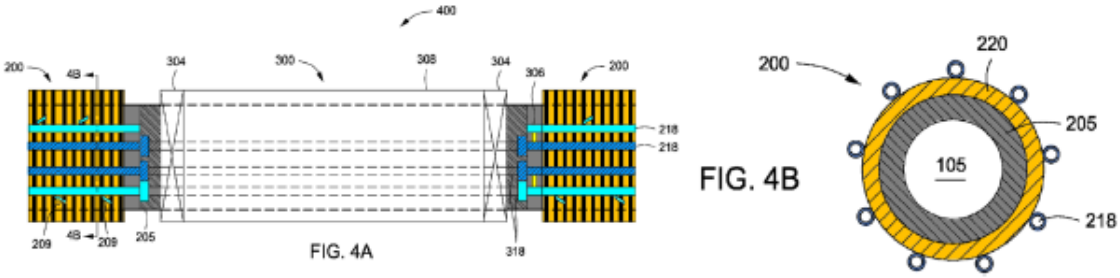

Petitioner's annotated version of Yeh Figures 4A (on the left) and 4B (on the right) show cross-sectional side views of Yeh's zonal isolation apparatus 400 comprising sand screen 220 (highlighted in orange) wrapping around base pipe 205 (highlighted in dark gray) with external shunt tubes 218 (highlighted in light blue and blue in Figure 4A, but not highlighted in Figure 4B) arranged concentrically around sand screen 220. *Id.*; *see also* Ex. 1005, 15:53–16:42. These figures show what Petitioner's declarant

[3] According to Petitioner, Yeh and Yeh2 are linked because they describe the same system "in the same 5,000-feet horizontal wellbore." Pet. 32.

describes as "the most common design" "[f]or round tubes," which "is nine in a concentric arrangement, including six transport tubes and three packing tubes." Ex. 1003 ¶ 163.

Petitioner argues that Yeh's shunt tubes 218 include packing tubes (light blue) and transport tubes (blue) that are external to sand screen 220. Pet. 34 (citing, *inter alia*, Ex. 1005, 4:47–48, 4:53–56, 15:60–64, 16:38–39, Fig. 4A; Ex. 1003 ¶¶ 269–70). Petitioner contends that "Figure 4A show[s] Yeh's 'packing tubes' 218 [(light blue)] have multiple 'ports or nozzles' 209." *Id*. (citing Ex. 1005, 15:60–64, Figure 4A; Ex. 1003 ¶ 269).

Concerning the second sand screen assembly, Petitioner provides an annotated version of Yeh's eccentric screen in Figure 8A, reproduced below. *Id.* at 34–36.

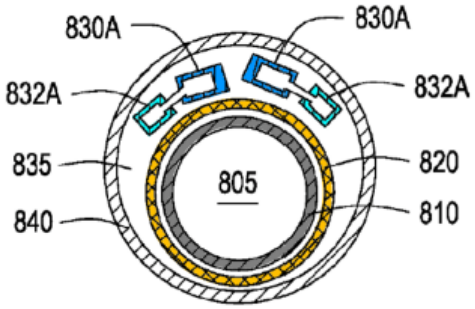

FIG. 8A

Petitioner's annotated version of Yeh Figure 8A shows an eccentric design for a wellbore tool having bore 805, filter medium 820 around base pipe 810, transport tubes 830A (highlighted in blue) and packing tubes 832A (highlighted in light blue). *Id.* at 35–36 (citing, e.g., Ex. 1005, 24:15–29; Ex. 1003 ¶ 275). Petitioner states that Yeh also teaches that though Figure 8A shows rectangular shunt tubes (i.e. transport and packing tubes), they can also be round. *Id.* at 36 (citing Ex. 1005, 24:10–12, Fig. 8C). Figure 8A shows what Petitioner's declarant describes as "[t]he most common current

design for rectangular tubes[,] . . . using two transport tubes and two packing tubes." Ex. 1003 ¶ 163. This 2x2 arrangement is also the most common design for eccentric sand screens. *Id.* ¶¶ 129–130.

For the claimed arrangement of the first and second sand screen assemblies, Petitioner argues that the use of Yeh's crossover tool between the concentric screen and the eccentric screen teaches the claimed limitations. Pet. 39–40 (citing, *inter alia*, Ex. 1003 ¶¶ 285–89).

Petitioner contends that "the concentric and eccentric screens are arranged end-to-end separated by a crossover tool so that their respective base pipes and transport tubes are fluidly connected." *Id*. (citing Ex. 1003 ¶ 288). Petitioner provides an annotated version of Yeh Figure 10A, reproduced below, to show Yeh's "[c]rossover tool 1000's primary flow path 1005 (dark gray) and secondary flow path 1020 (red)." *Id.* at 40 (citing, *inter alia*, Ex. 1005, Fig. 10A, 25:46–55, 25:62–65, 26:42–47; Ex. 1003 ¶ 287).

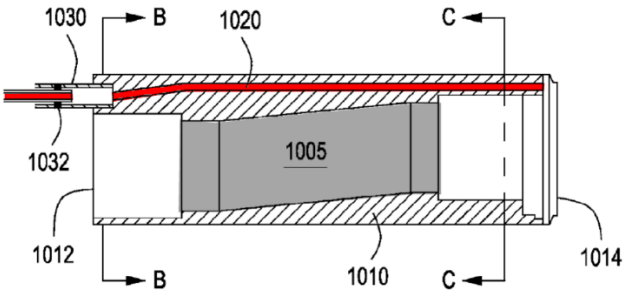

FIG. 10A

Yeh Figure 10A above, shows a crossover joint in cross-section. Ex. 1005, 15:41–55.

After our review of the record, we determine that Petitioner has shown by a preponderance of the evidence that the combination of Yeh and Yeh2

render obvious the uncontested limitations including the preamble and elements 1[a]–1[d].

b) Contested Limitation 1[e]

Limitation 1[e] requires that the transport tube of the first sand screen assembly has a wall thickness greater than the wall thickness of the transport tube of the second sand screen assembly. Petitioner contends that Yeh suggests this limitation. Pet. 41–43 (citing, *inter alia*, Ex. 1003 ¶¶ 290–97).

As previously discussed, Petitioner relies on Yeh's teaching of "an example completion assembly can be 'concentric screen → crossover tool → eccentric screen' wherein the crossover tool connects the primary and secondary flow paths of the sand screens." *Id.* at 33 (quoting Ex. 1005, 30:13–14) (citing Ex. 1005, 25:41–65; Ex. 1003 ¶¶ 262–63). Petitioner notes that in a long well bore of 5000 feet, Yeh teaches "that concentric screens should be placed at the heel, or higher-pressure side, of an interval; whereas, eccentric screens should be placed at the toe, or lower-pressure side." *Id.* at 41 (citing Ex. 1005, 30:13–26). We note that Yeh states that eccentric screens are "more readily available," "less-expensive" and less complex. Ex. 1005, 30:21, 27, 31. However, Yeh notes that "[c]oncentric sand screens can be more robust for gravel packing long intervals." *Id.* at 30:16–17.

Petitioner further points to Yeh as teaching that shunt tubes must have "a certain surrounding wall thickness" "[i]n order to maintain the mechanical integrity (that is, to stay within the burst, bending, and collapse ratings) of the [shunt tubes]." *Id.* at 28:20–23; *see also* Pet. 42. Not acknowledged by Petitioner is that Yeh mentions this with reference to shunt tubes in the crossover joint, while teaching the benefits of maximizing the inner diameter of the primary flow path of the crossover joint, and also identifies this wall thickness as "limit[ing] the inside diameter of the

crossover joint." Ex. 1005, 28:23–24; *see also id.* at 27:62–28:30; PO Resp. 12–16.

Petitioner argues that one of skill in the art would have understood that material choice, wall thickness, and pipe diameter all impact burst pressure of a pipe. Pet. 42 (citing Ex. 1017, 24 (Equation (14)). Thus, Petitioner argues that "one of skill would have understood that a higher-pressure shunt tube assembly necessitated greater wall thickness," and that a decreased wall thickness of the shunt tube assembly at a lower-pressure region "would save cost by using less metal in eccentric screens." *Id.* (citing Ex. 1003 ¶¶ 293, 295).

An inherent issue with Petitioner's argument is that Petitioner relies on embodiments of Yeh with concentric sand screens having nine shunt tubes (six transport tubes and three packing tubes) (Yeh Figures 4A–B) and eccentric sand screens with four shunt tubes (two transport tubes and two packing tubes) (Yeh Figures 8A, 8C). *See* Pet. 32–37, 39, 41–43. Yet, Petitioner's reasoning as to why "a higher-pressure shunt tube assembly necessitated greater wall thickness" rests on an unspoken one to one comparison between the shunt tubes of the different systems. *See id.*; *see also* Ex. 1003 ¶¶ 291–297 (Petitioner's declarant comparing possible transport tubes of different pressure regions without considering or addressing any difference in the number of transport tubes). However, the embodiments relied on by Petitioner have different numbers of shunt tubes, and thus the greater wall thickness does not appear to be "necessitated" in the way inferred by Petitioner. Further, Petitioner's analysis would seem to be most appropriate when comparing two concentric sand screens for different pressure regions, or two eccentric sand screens for different pressure regions.

This is especially problematic because, as discussed above, Petitioner relies on Yeh's teachings related to a horizontal well bore of 5000 feet for the "concentric screen → crossover tool → eccentric screen" arrangement, as well as, for why the concentric screen needs to be rated for a high pressure. Pet. 32–37, 39, 41–43. Petitioner also refers to these features for why one of skill in the art would combine the teachings of Yeh and Yeh2. *Id.* at 32. However, on cross-examination, Petitioner's declarant agreed that it is concentric sand screens having a 6x3 shunt tube design that would provide the noted benefits of being rated for a higher pressure and being more robust (as relied on in the Petition), as compared to eccentric sand screens. Ex. 2013, 42:20–43:8; Sur-reply 4–5.

This also exposes another issue with Petitioner's arguments. Though Petitioner identifies that one of skill in the art would be aware that material choice, wall thickness, and pipe diameter all impact burst pressure of a pipe (Pet. 42 (citing Ex. 1017, 24 (Equation (14))), the Petition essentially ignores the fact that the claims do not require a single pipe in isolation. The claims require two shunt tube assemblies, each surrounding a base pipe within a wellbore. It is uncontested that a wellbore provides a confined space for such a system and thus any change in wall thickness of one pipe can result in a significant impact in the function of the other pipes. We find the testimony of Petitioner's declarant (*see, e.g.*, Ex. 1003 ¶¶ 290–297) unpersuasive when discussing wall thickness because it focusses on basic considerations of a standalone pipe, without sufficient consideration of the claimed completion assembly with its required pipe and tube structure. PO Resp. 20–26.

In response to Patent Owner's argument concerning Yeh's embodiments relied on in the Petition, Petitioner argues for the first time that Patent Owner's declarant "conceded, Yeh discloses that both concentric and

eccentric screens use 'two or more shunt tubes.'" Reply 9 (quoting Ex. 1043, 47:19–48:21). Petitioner does not provide a citation to Yeh or a citation to where the Petition relies on the same number of shunt tubes between concentric and eccentric screens. The deposition cited by Petitioner discusses Yeh at column 16, lines 26 through 35. However, the Petition does not cite or rely on these teachings of Yeh. Thus, we decline to consider this late argument.[4] *See* 35 U.S.C. § 312(a)(3) (requiring the petition to identify "with particularity . . . the grounds on which the challenge to each claim is based, and the evidence that supports the grounds"); 37 C.F.R. § 42.104(b)(5).

c) Conclusion as to Claim 1

After considering of the arguments and evidence, we determine that Petitioner has not shown by a preponderance of the evidence that claim 1 is unpatentable.

5. Independent Claim 21

Claim 21 includes essentially the same uncontested limitations as claim 1. *Compare* Ex. 1001, 18:17–50 *with id.* at 20:59–22:4. Further, limitation 21[e] is similar to limitation 1[e] except that rather than focusing on the wall thickness of the transport tubes, it focuses on the material and relative tensile strength of the transport tubes as follows:

> the transport tube of the first sand screen assembly is formed of a first material and the transport tube of the second sand screen

[4] We also agree with Patent Owner that this new argument would be problematic based on Petitioner's reliance on the need for different pressure ratings of concentric and eccentric screens. Sur-reply 4–6. The Petition does not rely on a 2x2 concentric screen with the required pressure rating to be positioned in the heel of a horizontal well bore of 5000 feet.

> assembly is formed of a second material, the first material having a greater tensile strength than the second material.

Id. at 22:5–9.

Because of the similarity of the claims, Petitioner relies on Yeh "for the same reasons discussed in claim 1[e]." Pet. 77. The Petition relies on Jones for teaching "that although shunt tubes 'may be made of any pressure-resistant material, [they are] preferably to be made of stainless steel." *Id.* at 78 (quoting Ex. 1007, 4:11–13) (alteration in original). Thus, Petitioner concludes that "[g]iven the space constraints on sand screens limiting increasing outside diameter, . . . one of skill would have decreased wall thickness (t), decreased tensile strength (f), or both to save cost." *Id.* (citing Ex. 1003 ¶ 436).

This argument suffers from essentially the same issues as limitation 1[e]. For example, Petitioner and Petitioner's declarant both provide analysis that appear to rest on an unspoken one to one comparison between the shunt tubes. Further, neither discuss the difference between the different types of sand screens relied upon in the Petition. Though the discussion here does at least acknowledge "space constraints on sand screens limiting increasing outside diameter" it still does not address the constraints in view of the claim as a whole.

For all of these reasons we determine that Petitioner has not shown by a preponderance of the evidence that claim 21 is unpatentable.

6. Claims 2–10, 22–23

Claims 2–10 depend from claim 1 and claims 22–23 depend from claim 21. Thus, Petitioner has not shown by a preponderance of the evidence that these claims are unpatentable, at least because of their dependence from claim 1 or 21.

7. Claims 11, 12

Patent Owner does not contest (*see* PO Resp) Petitioner's position that claims 11 and 12 are unpatentable over the combination of Yeh and Yeh2 (Pet. 59–61). In fact, Patent Owner only requests that "the Board . . . uphold the validity of challenged claims 1–10 and 14–23." PO Resp. 2. Accordingly, we determine that Patent Owner has waived any request to maintain the validity of these claims.

Having considered Petitioner's uncontested argument and the evidence of record, we determine Petitioner has shown by preponderance of the evidence that each of these claims would have been obvious over the combination of Yeh and Yeh2. Pet. 59–61 (citing e.g., Ex. 1005, 28:17–24; Ex. 1003 ¶¶ 355–64).

E. Claims 14–20 – Obviousness over Yeh, Yeh2, and Optionally Jones2

Petitioner challenges claims 14–20 as unpatentable under 35 U.S.C. § 103(a) over the combination of Yeh and Yeh2, and optionally Jones2. Pet. 61–76. As discussed below, we determine that Petitioner has shown by a preponderance of the evidence that these claims are unpatentable.

1. Claim 14

Independent claim 14 is directed to "[a] method of installing a completion assembly in a wellbore." Ex. 1001, 20:5–6. Petitioner relies on much of the same combined teachings of Yeh and Yeh2 previously discussed to teach the claimed method steps. *See* Pet. 61–72 (referring back to the discussion of claim 1 and similar teachings discussed above).

Patent Owner contends that the Petition fails to show that the prior art suggests:

> "determining a shunt tube system operating pressure associated with the distal end of the production zone and selecting a low

> pressure shunt tube system based on the distal end determined pressure," as required by claim element 14[c].

PO Resp. 37.

Concerning the operating pressure of the shunt tube system, Petitioner's declarant states:

> A POSITA reading Yeh's teaching regarding the expected pressures in the horizontal wellbore example and the need to select tubing to withstand those pressures understood the need to determine the shunt tube system operating pressure throughout the horizontal wellbore to confirm that the tools being selected could withstand that pressure.

Ex. 1003 ¶ 383 (citing Ex. 1005, 28:10–24; Ex. 1006, 5). This testimony is also supported by Figure 15 of Yeh2 (reproduced at Pet. 66), which shows the expected pressure in transport tubes along the entire length of a 5000 ft horizontal well, when gravel packing the well with a particular multiple-shunt manifold system. Ex. 1006, 5.

Thus, we agree with Petitioner that the combination of Yeh and Yeh2 teaches determining the shunt tube system operating pressures associated with the distal end of the production zone, but also more generally, determining the operating pressures along the entire production zone.

With this knowledge of the system operating pressures, Petitioner argues that one of skill in the art would have selected eccentric screens for the distal end of the production zone "at any point at which the slurry pressure dropped below the pressure capacity of the eccentric screen shunt tubes." Pet. 66 (citing Ex. 1005, 30:16–20; Ex. 1003 ¶ 388). In other words, knowing that the pressure decreases as you approach the toe, Yeh's low-pressure rated eccentric screens could be used from some point prior to and covering the toe.

Patent Owner argues that this selection is not "based on the distal end determined pressure." PO Resp. 37–38. We disagree.

As discussed above, the record supports Petitioner's position that one of skill in the art would have "understood the need to determine the shunt tube system operating pressure throughout the horizontal wellbore." Ex. 1003 ¶ 383; *see also* Pet. 64–65. We find convincing Petitioner's argument that one of skill with this understanding of the system pressures would select a shunt tube system rated to not only address the distal end, but also to address the needs of the adjacent region, so long as the pressure rating supported such a selection. *See* Pet. 65–67; Ex. 1003 ¶¶ 385–388.

After reviewing the record, we determine that Petitioner has shown by a preponderance of the evidence that claim 14 is unpatentable as obvious over the combined teachings of Yeh and Yeh2, and over Yeh, Yeh2, and Jones2.

2. Claims 15–20

Claims 15–20 depend from claim 14. Ex. 1001, 20:32–54. Petitioner argues that claims 15–20 are obvious over the combination of Yeh and Yeh2, and optionally Jones2. Pet. 72–76. Patent Owner relies on the arguments over claim 14 (addressed above) for the patentability of these claims. PO Resp. 37–38.

After reviewing the record, we determine that Petitioner has shown by a preponderance of the evidence that claims 15–20 are unpatentable as obvious over the combined teachings of Yeh and Yeh2, and over Yeh, Yeh2, and Jones2.

III. MOTION TO AMEND

In its Revised Motion to Amend, Patent Owner requests that if any of claims 3, 6–9, 11, 12, and 14–23 be found unpatentable, they should be replaced by proposed substitute claims 24–40.[5] RMTA 1.

As discussed above, we determine that original claims 11, 12, and 14–20 have been shown by a preponderance of the evidence to be unpatentable. We therefore, proceed to address Patent Owner's Revised Motion to Amend with respect to proposed substitute claims 29–37.

A. Proposed Substitute Claims

Patent Owner submits the below proposed substitute independent claims 29 and 31 (with brackets indicating deleted text, and underscoring indicating added text). Patent Owner also submits proposed substitute dependent claims 30 and 32–37. *See* Mot. Claims App'x.

> 29. (Substitute for Claim 11) A completion assembly for deployment in a wellbore, the completion assembly comprising:
>
> a source of pressurized working fluid;
>
> a first <u>eccentric</u> sand screen assembly attached to a second <u>eccentric</u> sand screen assembly, wherein the first <u>eccentric</u> sand screen assembly comprises a shunt tube assembly with a first burst pressure and the second <u>eccentric</u> sand screen assembly comprises a shunt tube assembly with a burst pressure less than the first burst pressure, and wherein the shunt tube assembly with the first burst pressure is fluidly coupled between the source of pressurized working fluid and the shunt tube assembly with the burst pressure less than the first burst pressure.
>
> 31. (Substitute for Claim 14) A method of installing a completion assembly in a wellbore, the method comprising:

[5] In an *inter partes* review, amended claims are not added to a patent as of right, but rather must be proposed as a part of a motion to amend. 35 U.S.C. § 316(d).

> identifying an elongated production zone having an upstream proximal end and a downstream distal end with respect to a source of pressurized working fluid;
>
> determining a shunt tube system operating pressure associated with the proximal end of the production zone and selecting a high pressure shunt tube system based on the proximal end determined pressure;
>
> determining a shunt tube system operating pressure associated with the distal end of the production zone and selecting a low pressure shunt tube system based on the distal end determined pressure;
>
> installing a first eccentric sand screen assembly in a wellbore adjacent the downstream distal ~~downstream~~ end of the elongated production zone;
>
> attaching a second eccentric sand screen assembly to the first eccentric sand screen assembly at the proximal upstream end of the elongated production zone, wherein the first eccentric sand screen assembly has the low pressure shunt tube system and the second eccentric sand screen assembly has the high pressure shunt tube system, such that a downstream end of the high pressure shunt tube system is coupled to an upstream end of the low pressure shunt tube system; and
>
> coupling the source of pressurized working fluid to an upstream end of the high pressure shunt tube system.

Id.

B. Statutory and Regulatory Requirements

"Before considering the patentability of any substitute claims, . . . the Board first must determine whether the motion to amend meets the statutory and regulatory requirements set forth in 35 U.S.C. § 316(d) and 37 C.F.R. § 42.121." *Lectrosonics, Inc. v. Zaxcom, Inc.*, IPR2018-01129, Paper 15 at 4 (PTAB Feb. 25, 2019) (precedential) ("*Lectrosonics*"). In its Opposition to the Revised Motion to Amend, Petitioner only contests that proposed substitute claims 29–34 are nonresponsive to the Preliminary Guidance and

their original Opposition. Opp. RMTA 1. For the reasons set forth below, we determine that Patent Owner has satisfied the statutory and regulatory requirements.

First, the Motion proposes one substitute claim for each challenged claim, which is a reasonable number of substitute claims. 35 U.S.C. § 316(d)(1)(B); *Lectrosonics*, Paper 15 at 4–5 (citing 37 C.F.R. § 42.121(a)(3)). Petitioner does not argue otherwise. *See generally* Opp. RMTA.

Second, the proposed substitute claims respond to a ground of unpatentability involved in this trial. *Lectrosonics*, Paper 15 at 5–6. Patent Owner presents the claim amendments in an attempt to add features to further distinguish the proposed substitute claims as patentable over the references asserted in the instituted grounds. RMTA 3. Petitioner asserts that Patent Owner's explanation is insufficient without explaining why or addressing the argument provided by Patent Owner. Opp. RMTA 1. We determine that though Patent Owner's explanation is brief, it is sufficient.

Third, "[a] motion to amend may not present substitute claims that enlarge the scope of the claims of the challenged patent or introduce new subject matter." *Lectrosonics*, Paper 15 at 6–8 (citing 35 U.S.C. § 316(d)(3); 37 C.F.R. § 41.121(a)(2)(ii)). We determine that the proposed amendments do not enlarge the scope of the claims or introduce new subject matter. Petitioner does not argue otherwise. *See generally* Opp. RMTA. Further, we determine Patent Owner has set forth sufficient written description support for the proposed amendments. RMTA 4–18. Petitioner does not argue otherwise. *See generally* Opp.

In addition, the Motion includes a claim listing, as required by 37 C.F.R. § 42.121(b). RMTA Claim App'x.

We determine that the Motion meets the statutory requirements of 35 U.S.C. § 316(d) and 37 C.F.R. § 42.121.

C. Burdens for Patentability of Proposed Claims

Ordinarily, "the petitioner bears the burden of proving that the proposed amended claims are unpatentable by a preponderance of the evidence." *Bosch Automotive Service Solutions, LLC v. Matal*, 878 F.3d 1027, 1040 (Fed. Cir. 2017) (as amended on reh'g in part) (Mar. 15, 2018); *see Lectrosonics*, Paper 15 at 3–4. In determining whether a petitioner has proven unpatentability of the substitute claims, the Board focuses on "arguments and theories raised by the petitioner in its petition or opposition to the motion to amend." *Nike, Inc. v. Adidas AG*, 955 F.3d 45, 51 (Fed. Cir. 2020).

D. Evidence

In addition to the patents and printed publications relied on in its original grounds of unpatentability, Petitioner relies on:

Name	Non-Patent Document	Exhibit
Bonner	A. Bonner et al., *Design and Validation of an Improved Shunt Tube System*, Society of Petroleum Engineers, SPE-169440-MS (2014)	1016

E. Asserted Grounds

Petitioner asserts that the proposed substitute claims are unpatentable on the following grounds:[6]

Claim(s) Challenged	35 U.S.C. §	References/Basis
29, 30	103	Yeh, Bonner, Yeh2
31–35, 37[7]	103	Yeh, Yeh2, Bonner, Jones
36	101	Lack of utility
36	112(a)	Enablement

F. Level of Ordinary Skill

When analyzing the proposed substitute claims, we apply the same formulation regarding the level of ordinary skill in the art that we applied when analyzing the original claims. *See supra* § II.B.

G. Claim Construction

Neither party identifies any terms that need to be construed in the proposed substitute claims. We determine that it is unnecessary to formally construe any of the claim terms.

H. Claims 29, 30 – Obviousness over Yeh, Yeh2, Bonner

Petitioner argues that the combination of Yeh, Yeh2, and Bonner would have rendered obvious the added limitations of the proposed substitute claims. Opp. RMTA 11–15. Patent Owner disagrees. PO Reply 9–12. In our analysis below, we determine that Petitioner has shown by a preponderance of the evidence that proposed substitute claims 29 and 30 are unpatentable over the combination of Yeh, Yeh2, and Bonner.

---

[6] Petitioner supports its challenge with an additional declaration from Michael R. Chambers, Sr. (Ex. 1044).

[7] Petitioner's summary of the obviousness grounds includes claim 36, however the body does not present an argument related to obviousness. *See* Opp. RMTA 1, 19–20.

1. Bonner

Bonner refers to a paper published by the Society of Petroleum Engineers, and titled "Design and Validation of an Improved Shunt Tube System." Ex. 1016, 1. Bonner discusses a system "designed primarily for gravel packing in horizontal wells . . . with two larger transport tubes and two smaller packing tubes, all mounted to standard sand screens in an eccentric design." *Id.* Bonner also states that the system was tested to "determine the burst pressure rating of the shunt system." *Id.* at 11. Bonner states that "[t]he overall testing substantiated the goal rating of 5000 psi burst pressure. However, a 1.33 safety factor was judged to be advisable for a working burst pressure for the tube system in order to allow for variations in the manufacturing of the tubes." *Id.* at 12.

2. Claim 29

Regarding proposed substitute claim 29, the majority of elements are identical to corresponding elements in original claim 11. *Compare* RMTA, Claim App'x. 4, *with* Ex. 1001, 19:42–54. As discussed above, Patent Owner waived any request to maintain the validity of claim 11.

Claim 29 amends claim 11 to require that the first and second sand screens are both "eccentric" and have different burst pressures, as follows:

> a first <u>eccentric</u> sand screen assembly attached to a second <u>eccentric</u> sand screen assembly, wherein the first <u>eccentric</u> sand screen assembly comprises a shunt tube assembly with a first burst pressure and the second <u>eccentric</u> sand screen assembly comprises a shunt tube assembly with a burst pressure less than the first burst pressure.

RMTA Claim App'x 4.

As previously discussed, we agree with Petitioner's declarant statement that:

> A POSITA reading Yeh's teaching regarding the expected pressures in the horizontal wellbore example and the need to select tubing to withstand those pressures understood the need to determine the shunt tube system operating pressure throughout the horizontal wellbore to confirm that the tools being selected could withstand that pressure.

Ex. 1003 ¶ 383 (citing Ex. 1005, 28:10–24; Ex. 1006, 5).

Thus, we find the evidence supports Petitioner's position that one of skill in the art would use Bonner's eccentric sand screen assembly with Yeh's eccentric sand screen assembly along a horizontal wellbore, as long as Bonner's screen was positioned at a location requiring a higher pressure. Opp. RMTA 12 (citing Ex. 1044 ¶¶ 79–80). Though Patent Owner argues that Yeh and Bonner's eccentric sand screen assemblies are similar, Patent Owner implicitly acknowledges that Bonner's eccentric sand screen assembly has a "working pressure of at most 3,333-3,760 psi" which is greater than an eccentric sand screen assembly rated for a 3,000-psi working pressure/3000 ft. PO Reply 4–5. As the added limitations merely require first and second eccentric sand screens having different burst pressures, we find that this would result from combining Yeh and Bonner.

We further note that Petitioner argues that it would have been obvious to try Bonner's eccentric sand screen assembly with thicker walls to increase the pressure rating. Opp. RMTA 9–10, 12 (citing Ex. 1044 ¶¶ 68–73, 79–80). Patent Owner does not directly address this obvious to try argument or contest that thicker walls would allow Bonner's eccentric sand screen assembly to achieve an even higher pressure rating.[8] *See* PO Reply.

---

[8] We also note that though this argument is similar to arguments made with respect to claim 1, the Petition does not advance any argument based on comparing a single type of sand screen assembly for claim 1, such as that at

Patent Owner does argue that any combination that removes Yeh's crossover tool "removes Yeh's invention and fundamentally alters Yeh's principle of operation. Such a combination fails to establish obviousness." PO Reply 2 (citing *Plas-Pak Indus., Inc. v. Sulzer Mixpac AG*, 600 Fed. App'x 755, 759 (Fed. Cir. 2015); *Medtronic, Inc. v. Teleflex Innovations S.a.r.l.*, 69 F.4th 1341, 1350 (Fed. Cir. 2023) ("[D]estruction of [primary reference's] 'entire premise' 'counsel[ed] strongly against obviousness'" (third alteration in original)).

However, we note that neither the claim nor Petitioner's argument prevents a crossover tool from being used, or eviscerates the teaching that a crossover tool be used to connect concentric and eccentric sand screen assemblies. Even if some of Yeh's concentric sand screens are replaced, there is nothing in the proposed rejection to suggest that they could not still be used to meet the needs of a particular wellbore. Petitioner also identifies other core teachings of Yeh such as the need for higher rated sand screens and the need to place the higher pressure rated components at an upstream location and lower pressure rated components at a downstream location, which are clearly consistent with Petitioner's argument. Pet. Sur-reply 5.

For all of these reasons, we determine that Petitioner has shown by a preponderance of the evidence that proposed substitute claim 29 is unpatentable over the combination of Yeh, Yeh2, and Bonner.

3. Claim 30

Claim 30 depends from claim 29. RMTA Claim App'x. Petitioner argues that claim 30 is obvious over the combination of Yeh, Yeh2, and

---

issue here. We also note that claim 1 includes different limitations than those at issue in proposed substitute claim 29.

Bonner. Opp. RMTA 13–15. Patent Owner relies on the arguments over claim 29 (addressed above) for the patentability of this claim. PO Reply 2–6.

After our review of the arguments and evidence, we determine that Petitioner has shown by a preponderance of the evidence that the combination of Yeh, Yeh2, and Bonner teaches or suggests proposed substitute claim 30.

I. Claim 31–35, 37 – Obviousness over Yeh, Yeh2, Bonner, Jones

Petitioner argues that the combination of Yeh, Yeh2, Bonner, and Jones would have rendered obvious the added limitations of proposed substitute claims 31–35, and 37. Opp. RMTA 15–19, 20–21. Patent Owner relies on the arguments over claim 29 (addressed above) for the patentability of claims 31, 32, 34, and 35. PO Reply 2–6. Patent Owner separately argues the patentability of claims 33 and 37. *Id.* at 7–9, 10–12.

1. Claims 31, 32, 34, 35

After our review of the arguments and evidence, we determine that Petitioner has shown by a preponderance of the evidence that the combination of Yeh, Yeh2, Bonner, and Jones teaches or suggests these proposed substitute claims.

2. Claim 33

The relevant portion of claim 33 reads:

> wherein a packing tube of the high pressure shunt tube system is interconnected to a shunt tube junction block of the low pressure shunt tube system.

RMTA Claim App'x.

Petitioner argues that each of Yeh, Yeh2, and Bonner disclose a junction block connected in the manner claimed. Opp. RMTA 17 (citing Ex. 1005, Fig. 4A; Ex. 1006, 3, Fig. 6a; Ex. 1003 ¶ 310; Ex. 1044 ¶¶ 116–

117; Ex. 1016, Fig. 8); *see also* Pet. 47–49 (discussing junction blocks with respect to claim 3).

Patent Owner argues that Yeh's transport tubes are connected, but not the packing tubes. PO Reply 8. Patent Owner makes similar arguments concerning Yeh2 and Bonner. *Id.* at 8–9. Patent Owner explains that "it is not enough for the art to teach any 'continuous' path between any part of a packing tube and a downstream junction block," but rather that the distal ends of the packing tubes must connect, or provide flow to the shunt tube junction block of the low pressure shunt tube system. *Id.*

Petitioner characterizes Patent Owner's position as stating that '"interconnected' requires a direct connection between the ***distal end*** of the upstream packing tube and the downstream junction block." Pet. Sur-reply 6. We agree with Petitioner that the plain language does not require us to read these additional features into the claim. As argued by Petitioner, the transport tubes in the prior art interconnect the packing tube of the high pressure shunt tube system to a shunt tube junction block of the low pressure shunt tube system, as required.

Thus, after our review of the arguments and evidence, we determine that Petitioner has shown by a preponderance of the evidence that the combination of Yeh, Yeh2, Bonner, and Jones teaches or suggests proposed substitute claim 33.

3. Claim 37

The relevant portion of claim 37 reads:

> wherein a cross-sectional flow area of a base pipe of the first eccentric sand screen assembly is the same as a cross-sectional flow area of a base pipe of the second eccentric sand screen assembly; and wherein an outer diameter of the first eccentric

> sand screen assembly is the same as an outer diameter of the second eccentric sand screen assembly.

RMTA Claim App'x.

Petitioner argues that "[a] skilled artisan would understand that sand screen outside diameter is determined by the clearance needed to install the tool in a wellbore of a given size," and "[t]hus, a skilled artisan would have understood that for two separate screens in the same wellbore, the outside diameter would be the same." Opp. RMTA 5 (citing Ex. 1052 ¶¶ 46, 48; Ex. 1045 ¶ 68); *see also id.* at 20–21 (Petition pointing to the prior discussion surrounding claim 26).

Concerning the cross-sectional flow area of the base pipes, Petitioner argues that:

> Sand screen base pipes are limited by the wellbore diameter and are generally maximized within that constraint to maximize flow of production fluids out of the well. EX1013, 2 (describing verification of base pipe design "through reservoir simulators that couple friction in the wellbore with the pressure drop through the reservoir"); EX1052 ¶¶53-54; EX1005, 28:20-24; EX2013, 30:17-31:22; EX2008, 130. Thus, a given wellbore diameter and projected production volume would result in base pipes with the same outside and inside diameters for both first and second sand screen assemblies. *E.g.*, EX1045 ¶68 (base pipe ID of about 5" (5.5" OD) for 8.5" open hole); EX1013, 3 (5.5" for eccentric); . . . EX1048, 14 (showing ID for 5.5" OD pipe by grade); EX1052 ¶54.
>
> Additionally, the base pipe inside diameter is controlled by the need to pass tools through the tubing for completion and workover, necessitating a uniform diameter. EX1005, 24:18-19; EX1052 ¶¶55-59; EX2008, 130 ("Completion and workover operations can [be complicated by] the reduced inside diameter of the tubing…."); EX1005, 27:62-28:8 ("The increased diameter [of the primary flow path] eases the run of other downhole tools through the curved crossover joint."); EX1043, 53:10-57:6; EX1045 ¶60.

> Even if not expressly disclosed, making screen outside diameter and base pipe inside diameter the same is "a change only in form, proportions, or degree… [and] is not such invention as will sustain a patent." *Smith v. Nichols*, 88 U.S. 112, 119 (1874); *Gardner v. TEC Sys.*, 725 F.2d 1338, 1349 (Fed. Cir. 1984) (affirming dimensional limitations obvious because they "did not specify a device which formed and operated any differently from the prior art").

Opp. RMTA 5–6 (alterations in original).

Patent Owner asserts that this argument does not apply to claim 37 because claim 26 requires concentric screens. PO Reply 12. However, Petitioner's argument relies on evidence applicable to both concentric and eccentric screens.

Patent Owner also compares the differences between concentric and eccentric screens, however it is unclear how this argument applies. *Id.* at 10–12.

After our review of the arguments and evidence, we determine that Petitioner has shown by a preponderance of the evidence that the combination of Yeh, Yeh2, Bonner, and Jones teaches or suggests proposed substitute claim 37.

J. Claim 36 – Utility and Enablement

Petitioner argues that claim 36 is impossible and therefore is not enabled under 35 U.S.C. § 112(a) and lacks utility under 35 U.S.C. § 101. Opp. RMTA 19.

The relevant portion of the method of claim 36 recites:

> the low pressure shunt tube system is disposed to allow a larger volume of fluid to flow therethrough than the high pressure shunt tube system is disposed to allow to flow therethrough.

RMTA Claim App'x.

Petitioner argues that the claim violates the law of conservation of mass. Opp. RMTA 19. According to Petitioner, the law of conservation of mass requires that the flow entering the high-pressure shunt tube system equal the flow discharged from high-pressure shunt tube system. *Id.* The discharged flow is made up from that leaving the packing tubes holes/ nozzles and the flow directed to the low-pressure shunt tube system. *Id.* Thus, the flow directed to the low-pressure shunt tube system cannot be larger than the flow at the start which is entering the high-pressure shunt tube system.

Patent Owner argues that claim 36 should be construed to add the word "nozzle" to the claims, such as:

> Nozzles of the low pressure shunt tube system are ~~is~~ disposed to allow a larger volume of fluid to flow therethrough than nozzles of the high pressure shunt tube system are ~~is~~ disposed to allow to flow therethrough.

See PO Reply 9–10.

We decline to rewrite the claim to add structure not present in the claim. Thus, we agree with Petitioner that claim 36 is not enabled and lacking in utility because it is not possible.

IV. CONCLUSION[9]

For the reasons discussed above, we determine Petitioner has proven, by a preponderance of the evidence, that some of the challenged claims are

[9] Should Patent Owner wish to pursue amendment of the challenged claims in a reissue or reexamination proceeding subsequent to the issuance of this decision, we draw Patent Owner's attention to the April 2019 *Notice Regarding Options for Amendments by Patent Owner Through Reissue or Reexamination During a Pending AIA Trial Proceeding. See* 84 Fed. Reg.

unpatentable, as summarized in the table below. We also deny Patent Owner's Motion to Amend, as also summarized below.

In summary, regarding the challenged claims:

Claims	35 U.S.C. §	Reference(s) /Basis	Claims Shown Unpatentable	Claims Not shown Unpatentable
1–12	103	Yeh, Yeh2	11, 12	1–10
14–20	103	Yeh, Yeh2, Jones2	14–20	
21, 22	103	Yeh, Jones		21, 22
23	103	Yeh, Jones, Yeh2		23
Overall Outcome			11, 12, 14–20	1–10, 21–23

In summary, regarding the proposed substitute claims:

Motion to Amend Outcome	Claims
Original Claims Proposed to be Replaced	3, 6–9, 11, 12, 14–23
Substitute Claims Proposed in the Amendment	24–40
Substitute Claims: Motion to Amend Granted	
Substitute Claims: Motion to Amend Denied	29–37
Substitute Claims: Not Reached	24–28, 38–40

V. ORDER

In consideration of the foregoing, it is hereby ORDERED that:

Claims 1–10 and 21–23 of U.S. Patent 11,333,007 B2 have not been shown to be unpatentable;

Claims 11, 12, and 14–20 of U.S. Patent 11,333,007 B2 have been shown to be unpatentable;

16,654 (Apr. 22, 2019). If Patent Owner chooses to file a reissue application or a request for reexamination of the challenged patent, we remind Patent Owner of its continuing obligation to notify the Board of any such related matters in updated mandatory notices. See 37 C.F.R. § 42.8(a)(3), (b)(2).

Patent Owner's Revised Motion to Amend is denied with respect to substitute claims 29–37; and

FURTHERED that, because this is a Final Written Decision, parties to the proceeding seeking judicial review of the Decision must comply with the notice and service requirements of 37 C.F.R. § 90.2.

FOR PETITIONER:

Douglas Wilson
Michelle Armond
Monica Arnold
ARMOND WILSON LLP
doug.wilson@armondwilson.com
michelle.armond@armondwilson.com
monica.arnold@armondwilson.com

FOR PATENT OWNER:

Chad Walters
Jacob McDonald
BAKER BOTTS LLP
chad.walters@bakerbotts.com
jacob.mcdonald@bakerbotts.com