(12) INTERNATIONAL APPLICATION PUBLISHED UNDER THE PATENT COOPERATION TREATY (PCT)

(19) World Intellectual Property Organization
International Bureau

(43) International Publication Date
9 January 2014 (09.01.2014)

WIPO | PCT

(10) International Publication Number
WO 2014/006365 A1

(51) International Patent Classification: *A45D 20/12* (2006.01)

(21) International Application Number: PCT/GB2013/051537

(22) International Filing Date: 12 June 2013 (12.06.2013)

(25) Filing Language: English

(26) Publication Language: English

(30) Priority Data:

1211829.5	4 July 2012 (04.07.2012)	GB
1211831.1	4 July 2012 (04.07.2012)	GB
1211833.7	4 July 2012 (04.07.2012)	GB
1211830.3	4 July 2012 (04.07.2012)	GB

(71) Applicant: **DYSON TECHNOLOGY LIMITED** [GB/GB]; Tetbury Hill, Malmesbury Wiltshire SN16 0RP (GB).

(72) Inventors: **COURTNEY, Stephen**; c/o Dyson Technology Limited, Tetbury Hill, Malmesbury Wiltshire SN16 0RP (GB). **MOLONEY, Patrick**; c/o Dyson Technology Limited, Tetbury Hill, Malmesbury Wiltshire SN16 0RP (GB). **SHELTON, Edward**; c/o Dyson Technology Limited, Tetbury Hill, Malmesbury Wiltshire SN16 0RP (GB). **FOLLOWS, Thomas**; c/o Dyson Technology Limited, Tetbury Hill, Malmesbury Wiltshire SN16 0RP (GB). **JONES, David**; c/o Dyson Technology Limited, Tetbury Hill, Malmesbury Wiltshire SN16 0RP (GB).

(74) Agents: **FOWLER, Maria** et al.; Dyson Technology Limited, Intellectual Property Department, Tetbury Hill, Malmesbury Wiltshire SN16 0RP (GB).

(81) Designated States *(unless otherwise indicated, for every kind of national protection available)*: AE, AG, AL, AM, AO, AT, AU, AZ, BA, BB, BG, BH, BN, BR, BW, BY, BZ, CA, CH, CL, CN, CO, CR, CU, CZ, DE, DK, DM, DO, DZ, EC, EE, EG, ES, FI, GB, GD, GE, GH, GM, GT, HN, HR, HU, ID, IL, IN, IS, JP, KE, KG, KN, KP, KR, KZ, LA, LC, LK, LR, LS, LT, LU, LY, MA, MD, ME, MG, MK, MN, MW, MX, MY, MZ, NA, NG, NI, NO, NZ, OM, PA, PE, PG, PH, PL, PT, QA, RO, RS, RU, RW, SC, SD, SE, SG, SK, SL, SM, ST, SV, SY, TH, TJ, TM, TN, TR, TT, TZ, UA, UG, US, UZ, VC, VN, ZA, ZM, ZW.

(84) Designated States *(unless otherwise indicated, for every kind of regional protection available)*: ARIPO (BW, GH, GM, KE, LR, LS, MW, MZ, NA, RW, SD, SL, SZ, TZ,

[Continued on next page]

(54) Title: ATTACHMENT FOR A HAND HELD APPLIANCE

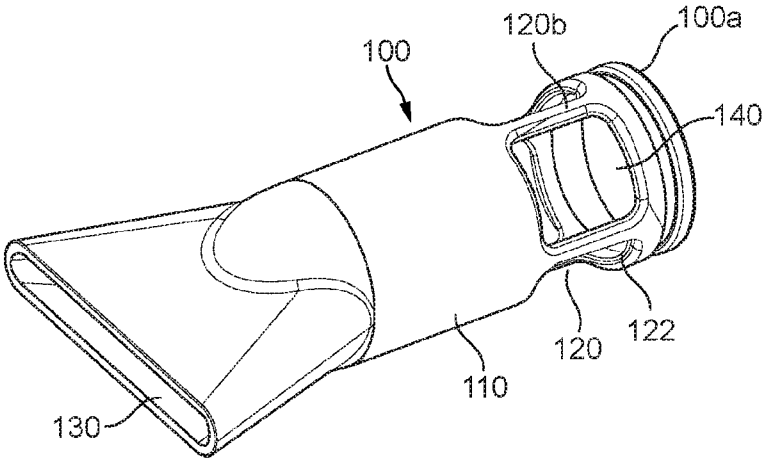

FIG. 1f

(57) Abstract: Disclosed is a hair dryer comprising a handle, a body comprising a duct,a fluid flow path extending through the duct and from a fluid inlet through which a fluid flow enters the hairdryer to a fluid outlet for emitting the fluid flow from a front end of the body,a primary fluid flow path extending at least partially through the body from a primary fluid inlet through which a primary fluid flow enters the hairdryer to a primary fluid outlet; a fan unit for drawing the primary fluid flow through the primary fluid inlet, and wherein the fluid flow is drawn through the fluid flow path by fluid emitted from the primary fluid outlet, and an attachment for adjusting at least one parameter of fluid emitted from the hairdryer, the attachment being attachable to the hairdryer so that the attachment protrudes from the front end of the body.

WO 2014/006365 A1

UG, ZM, ZW), Eurasian (AM, AZ, BY, KG, KZ, RU, TJ, TM), European (AL, AT, BE, BG, CH, CY, CZ, DE, DK, EE, ES, FI, FR, GB, GR, HR, HU, IE, IS, IT, LT, LU, LV, MC, MK, MT, NL, NO, PL, PT, RO, RS, SE, SI, SK, SM, TR), OAPI (BF, BJ, CF, CG, CI, CM, GA, GN, GQ, GW, KM, ML, MR, NE, SN, TD, TG).

Published:

— *with international search report (Art. 21(3))*

Attachment for a Hand Held Appliance

This invention relates to an attachment for a hand held appliance, in particular an attachment for a hairdryer and an appliance, particularly a hairdryer comprising such an attachment.

Blowers and in particular hot air blowers are used for a variety of applications such as drying substances such as paint or hair and cleaning or stripping surface layers. Generally, a motor and fan are provided which draw fluid into a body; the fluid may be heated prior to exiting the body. The motor is susceptible to damage from foreign objects such as dirt or hair so conventionally a filter is provided at the fluid intake end of the blower. Conventionally such appliances are provided with a nozzle which can be attached and detached from the appliance and changes the shape and velocity of fluid flow that exits the appliance. Such nozzles can be used to focus the outflow of the appliance or to diffuse the outflow depending on the requirements of the user at that time.

According to a first aspect, the invention provides a hairdryer comprising a handle; a body comprising a duct; a fluid flow path extending through the duct and from a fluid inlet through which a fluid flow enters the hairdryer to a fluid outlet for emitting the fluid flow from a front end of the body; a primary fluid flow path extending at least partially through the body from a primary fluid inlet through which a primary fluid flow enters the hairdryer to a primary fluid outlet; a fan unit for drawing the primary fluid flow through the primary fluid inlet, and wherein the fluid flow is drawn through the fluid flow path by fluid emitted from the primary fluid outlet, and an attachment for adjusting at least one parameter of fluid emitted from the hairdryer, the attachment being attachable to the hairdryer so that the attachment protrudes from the front end of the body.

The hairdryer has a primary flow which is that processed by and drawn into the appliance by the fan unit and a fluid flow which is entrained by the primary, processed flow. Thus the fluid flow through the hairdryer is amplified by the entrained flow.

Preferably, the attachment is attached to the hairdryer through insertion of part of the attachment into the duct through the fluid outlet. Preferably, said part of the attachment is slidably insertable into the duct through the fluid outlet. It is preferred that the attachment is retained within the duct by means of friction between the attachment and the duct.

Preferably, the attachment is in the form of a nozzle defining a nozzle fluid flow path extending from a nozzle fluid inlet through which the primary fluid flow enters the nozzle to a nozzle fluid outlet for emitting the primary fluid flow. Preferably, the nozzle comprises a first end which is insertable into the duct, and a second end remote from the first end, and wherein the nozzle fluid inlet is located between the first end and the second end of the nozzle. It is preferred that the nozzle fluid inlet comprises at least one aperture extending at least partially about the longitudinal axis of the nozzle. The longitudinal axis extends between the first end and the second end of the nozzle.

Preferably, the nozzle fluid inlet comprises a plurality of apertures extending circumferentially about the longitudinal axis of the nozzle.

It is preferred that the at least one aperture has a length extending in the direction of the longitudinal axis of the nozzle, and wherein the length of said at least one aperture varies about the longitudinal axis of the nozzle.

Preferably, the primary fluid outlet is configured to emit the primary fluid flow into the duct, and part of the nozzle is insertable into the duct through the fluid outlet to receive the primary fluid flow from the primary fluid outlet.

It is preferred that the nozzle comprises a side wall between the first end and the second end, and wherein a portion of the side wall which is located between the first end and the second end of the nozzle at least partially defines the nozzle fluid inlet. Preferably, the side wall is tubular in shape. Preferably, the nozzle fluid inlet is formed in the side wall. It is preferred the side wall extends about an inner wall, and wherein the nozzle fluid inlet is located between the inner wall and the side wall. Preferably, the inner wall is tubular in shape.

It is preferred that the side wall extends from the first end to the second end, and the nozzle comprises an outer wall extending at least partially about the side wall, and wherein the nozzle fluid inlet is located between the outer wall and the side wall. Preferably, the outer wall is tubular in shape. It is preferred that the nozzle fluid outlet is located between the walls.

Preferably, the nozzle comprises a further nozzle fluid inlet through which the fluid flow enters the nozzle. Preferably, the fluid flow and the primary fluid flow combine within the nozzle fluid flow path to form a combined fluid flow which is emitted from the nozzle fluid outlet.

Preferably, the nozzle comprises means for closing the further nozzle fluid inlet depending on the extent to which the nozzle has been inserted within the duct. It is preferred that the means for closing the further nozzle fluid inlet is configured to move from an open position to a closed position when the primary fluid flow enters the nozzle.

Preferably, the nozzle comprises a further nozzle fluid outlet for emitting the fluid flow, and wherein within the nozzle the primary fluid flow is isolated from the fluid flow.

According to a second aspect, the invention provides a hairdryer comprising a handle; a body comprising a fluid outlet and a primary fluid outlet; a fan unit for generating fluid flow through the hairdryer, the hairdryer comprising a fluid flow path extending from a

fluid inlet through which a fluid flow enters the hairdryer to the fluid outlet, and a primary fluid flow path extending from a primary fluid inlet to the primary fluid outlet; a heater for heating a primary fluid flow drawn through the primary fluid inlet; and a nozzle attachable to the body, the nozzle comprising a primary nozzle fluid inlet for receiving the primary fluid flow from the primary fluid outlet, and a primary nozzle fluid outlet for emitting the primary fluid flow, a further nozzle fluid inlet for receiving the fluid flow from the fluid outlet, a further nozzle fluid outlet for emitting the fluid flow, and wherein within the nozzle the fluid flow is isolated from the primary fluid flow.

It is preferred that one of the nozzle fluid outlet and the further nozzle fluid outlet extends about the other of the nozzle fluid outlet and the further nozzle fluid outlet. Preferably, the nozzle fluid outlet and the further nozzle fluid outlet are located on opposing sides of the nozzle. It is preferred that the nozzle fluid outlet and the further nozzle fluid outlet are substantially coplanar.

It is preferred that the nozzle comprises a further fluid flow path for conveying the fluid flow to the further fluid outlet, and wherein the primary fluid inlet extends at least partially about the further fluid flow path. Preferably, the primary fluid inlet surrounds the further fluid flow path.

It is preferred that the nozzle comprises a first end and a second end remote from the first end, and wherein the second end of the nozzle comprises at least the further nozzle fluid outlet. Preferably, the second end of the nozzle comprises the primary nozzle fluid outlet. It is preferred that the primary nozzle fluid outlet is located between the first end and the second end of the nozzle. Preferably, the second end of the nozzle is deformable. It is preferred that the first end of the nozzle comprises the further nozzle fluid inlet. Preferably, the first end of the nozzle is insertable into the fluid flow path through the fluid outlet. It is preferred that the first end of the nozzle is slidably insertable into the fluid flow path through the fluid outlet. Preferably, the nozzle is retained within the duct by means of friction between the nozzle and the body.

It is preferred that the primary fluid outlet is configured to emit the primary fluid flow into the primary nozzle fluid flow path, and wherein the primary nozzle fluid inlet is located between the first end and the second end of the nozzle.

Preferably, the nozzle comprises a side wall between the first end and the second end, and wherein a portion of the side wall which is located between the first end and the second end of the nozzle at least partially defines the primary nozzle fluid inlet. It is preferred that the side wall is tubular in shape. Preferably, the side wall extends about an inner wall, and wherein the primary nozzle fluid inlet is located between the inner wall and the side wall. It is preferred that the inner wall is tubular in shape.

Preferably, the side wall extends from the first end to the second end, and the nozzle comprises an outer wall extending at least partially about the side wall, and wherein the primary nozzle fluid inlet is located between the outer wall and the side wall. It is preferred that the outer wall is tubular in shape.

According to a third aspect the invention provides a nozzle for a hairdryer comprising a handle; a body comprising a fluid outlet and a primary fluid outlet; a fan unit for generating fluid flow through the hairdryer; a fluid flow path extending from a fluid inlet through which a fluid flow enters the hairdryer to the fluid outlet, and a primary fluid flow path extending from a primary fluid inlet to the primary fluid outlet; and a heater for heating a primary fluid flow drawn through the primary fluid inlet;

wherein the nozzle is attachable to the body, the nozzle comprising a primary nozzle fluid inlet for receiving the primary fluid flow from the primary fluid outlet, and a primary nozzle fluid outlet for emitting the primary fluid flow, a further nozzle fluid inlet for receiving the fluid flow from the fluid outlet, a further nozzle fluid outlet for emitting the first fluid flow, a primary nozzle fluid inlet for receiving the primary fluid flow from the primary fluid outlet, and a primary nozzle fluid outlet for emitting the primary fluid flow, and wherein within the nozzle the fluid flow is isolated from the primary fluid flow

Preferably, one of the further nozzle fluid outlet and the primary nozzle fluid outlet extends about the other of the further nozzle fluid outlet and the primary nozzle fluid outlet. It is preferred that the further nozzle fluid outlet and the primary nozzle fluid outlet are located on opposing sides of the nozzle. Preferably, the further nozzle fluid outlet and the primary nozzle fluid outlet are substantially coplanar.

It is preferred that the nozzle comprises a further fluid flow path for conveying the further fluid flow to the further fluid outlet, and wherein the primary fluid inlet extends at least partially about the further fluid flow path. Preferably, the primary fluid inlet surrounds the further fluid flow path.

It is preferred that the nozzle comprises a first end and a second end remote from the first end, and wherein the second end of the nozzle comprises at least the further nozzle fluid outlet. Preferably, the second end of the nozzle comprises the primary nozzle fluid outlet. It is preferred that the primary nozzle fluid outlet is located between the first end and the second end of the nozzle. Preferably, the second end of the nozzle is deformable. It is preferred that the first end of the nozzle comprises the further nozzle fluid inlet. Preferably, the primary nozzle fluid inlet is located between the first end and the second end of the nozzle.

It is preferred that the nozzle comprises a side wall between the first end and the second end, and wherein a portion of the side wall which is located between the first end and the second end of the nozzle at least partially defines the primary nozzle fluid inlet. Preferably, the side wall is tubular in shape. It is preferred that the side wall extends about an inner wall, and wherein the primary nozzle fluid inlet is located between the inner wall and the side wall. Preferably, the inner wall is tubular in shape.

It is preferred that the side wall extends from the first end to the second end, and the nozzle comprises an outer wall extending at least partially about the side wall, and

wherein the primary nozzle fluid inlet is located between the outer wall and the side wall. Preferably, the outer wall is tubular in shape.

Preferably, the shape of the nozzle fluid outlet is adjustable.

Preferably, the attachment is configured to inhibit the emission of the fluid flow from the hairdryer. Alternatively, the attachment is configured to inhibit the generation of the fluid flow. Preferably, the attachment comprises means for inhibiting the flow of fluid along the fluid flow path to the fluid outlet.

It is preferred that the means for inhibiting the flow of fluid along the flow path to the fluid outlet comprises a barrier which is located within the duct when the attachment is attached to the hairdryer. Preferably, the barrier is located at the first end of the nozzle. It is preferred that the barrier is substantially orthogonal to the longitudinal axis of the nozzle. Alternatively, the barrier is inclined to the longitudinal axis of the nozzle.

Preferably, said at least one parameter of the fluid flow emitted from the hairdryer comprises at least one of the shape, profile, orientation, direction, flow rate and velocity of the fluid flow emitted from the hairdryer.

According to a fourth aspect, the invention provides a hairdryer comprising a handle; a body comprising a fluid outlet, the fluid outlet comprising at least one aperture; a fan unit for generating a fluid flow from a fluid inlet through which the fluid flow enters the hairdryer to the fluid outlet; means for occluding at least part of the fluid outlet, the occluding means being moveable relative to the fluid outlet; and means for receiving an attachment for varying the shape of a fluid flow emitted from the hairdryer, wherein the attachment comprises means for engaging the occluding means as the attachment is received by the receiving means to effect movement of the occluding means relative to the fluid outlet.

Preferably, the engaging means is arranged to move the occluding means away from said at least part of the fluid outlet as the attachment is received by the receiving means.

It is preferred that the occluding means is arranged to move in a direction parallel to a plane in which said at least part of the fluid outlet is located. Preferably, the occluding means is slidably moveable in said direction relative to said at least part of the fluid outlet. Alternatively, the occluding means is arranged to move in a direction substantially orthogonal to a plane in which said at least part of the fluid outlet is located.

It is preferred that the engaging means is arranged to move the occluding means from a first position to a second position as the attachment is received by the receiving means. Preferably, the fluid outlet comprises a first aperture and a second aperture, and wherein in the first position the occluding means is arranged to occlude only the second aperture. It is preferred that the first aperture is spaced from the second aperture.

Preferably, the first aperture is located in a first plane and the second aperture is located in a second plane which is angled relative to the first plane. It is preferred that the second plane is orthogonal to the first plane. Preferably, the second aperture is located at an end of the hairdryer.

In one embodiment, the fluid outlet comprises an aperture which is partially occluded when the occluding means is in the first position, and wherein the engaging means is arranged to move the occluding means away from said aperture as the attachment is received by the receiving means. It is preferred that wherein the occluding means is biased towards the first position

Preferably, the engaging means extends about part of the attachment. It is preferred that the attachment comprises a side wall, and wherein the engaging means extends about the wall. Preferably, the engaging means surrounds the side wall. It is preferred that

the side wall is tubular in shape, and the engaging means comprises a lip upstanding from the side wall.

Preferably, the hairdryer includes a bore extending through the body, and wherein said at least part of the fluid outlet is arranged to emit fluid into the bore.

It is preferred that said at least part of the fluid outlet is annular in shape.

According to a fifth aspect the invention provides a hairdryer comprising a handle; a body comprising a duct; a fan unit for generating a fluid flow from a fluid inlet through which the fluid flow enters the hairdryer to an end of the duct for emitting the fluid flow from the body; and an attachment partially insertable into the end of the duct and which at least partially defines at least one aperture for emitting the fluid flow when the attachment is located in the duct, and wherein the attachment has an external surface located downstream from said at least one aperture and over which fluid emitted from said at least one aperture is directed.

Preferably, the external surface of the attachment at least partially defines said at least one aperture. It is preferred that the external surface of the attachment is convex in shape. Preferably, the external surface of the attachment comprises a Coanda surface. It is preferred that a front portion of the external surface of the attachment tapers towards a longitudinal axis of the nozzle. Preferably, the front portion of the external surface of the attachment tapers to a point.

It is preferred that the attachment comprises a collar at least partially surrounding the external surface, and wherein the internal surface of the collar and the external surface define an external fluid flow path through which fluid from outside the hairdryer is drawn by fluid emitted from said at least one aperture. Preferably, said at least one aperture is located between the internal surface of the duct and the external surface of the attachment.

It is preferred that the body comprises a fluid outlet for emitting the fluid flow into the duct, and wherein the attachment comprises a fluid inlet for receiving the fluid flow from the fluid outlet, and a fluid flow path extending from the fluid inlet to said at least one aperture.

Preferably, the attachment comprises a first end which is insertable within the duct, and a second end remote from the first end, and wherein the fluid inlet is located between the first end and the second end of the attachment.

It is preferred that the fluid inlet comprises at least one aperture extending at least partially about the longitudinal axis of the attachment.

Preferably, the attachment comprises a side wall between the first end and the second end of the attachment, and wherein a portion of the side wall which is located between the first end and the second end of the attachment at least partially defines the fluid inlet. It is preferred that the side wall is tubular in shape.

Preferably, the attachment comprises an outer wall extending about an inner wall which at least partially defines the fluid flow path. It is preferred that the inner wall is tubular in shape. It is preferred that the external surface of the attachment extends about the inner wall. Preferably, the inner wall is open at each end, and wherein a fluid flow is drawn through the duct and the inner wall by the fluid flow emitted from said at least one aperture.

In one embodiment, the attachment comprises a first side wall extending from the first end to the second end, and a second side wall extending at least partially about the first side wall, and wherein the fluid flow path is located between the side walls. Preferably, each of the first and second side walls is tubular in shape. It is preferred that the external surface of the attachment extends about the first side wall. Preferably, the first side wall is open at each end, and wherein a fluid flow is drawn through the duct and the first side wall by the fluid flow emitted from said at least one aperture.

The invention will now be described by way of example and with reference to the accompanying drawings, of which:

Figures 1a to 1f show various representations of a single flow path nozzle according to the invention;

Figures 2a to 2c show various representations of a single flow path nozzle attached to a hairdryer;

Figures 3a to 3f show various representations of a double flow path nozzle according to the invention;

Figure 4a to 4c show a double flow path nozzle attached to a hairdryer;

Figures 5a to 5f show a laminar flow nozzle;

Figures 6a to 6d show a nozzle with an end valve;

Figures 7a to 7f show a further double flow path nozzle;

Figures 7g to 7j show the further double flow path nozzle attached to a hairdryer;

Figure 8a shows an alternate single flow path nozzle attached to a hairdryer;

Figures 8b to 8g show an alternate single flow path nozzle;

Figure 9a shows an alternate double flow path nozzle;

Figures 9b to 9g show an alternate double flow path nozzle;

Figures 10a to 10e show a further single flow path nozzle;

Figures 11a to 11c show another single flow path nozzle;

Figures 11d to 11f show the another single flow path nozzle with a hairdryer;

Figures 12a to 12c show a nozzle and hairdryer having two inlets into a single flow path;

Figures 13a to 13d show an alternate two outlet arrangement;

Figures 14a to 14d show a further nozzle and hairdryer combination;

Figures 15a to 15d show an alternative nozzle with a hairdryer;

Figures 16a to 16g show yet another single flow path nozzle and hairdryer;

Figures 16h and 16i show the hairdryer without a nozzle;

Figures 16j to 16m show a further attachment with a hairdryer;

Figures 17a to 17c show a single flow path nozzle attached to a hairdryer; and

Figures 18a to 18e show a double flow path nozzle attached to a hairdryer.

Figures 1a to 1f show a nozzle 100 comprising a generally tubular body 110 with a longitudinal axis A-A extending along the length of the body, having a fluid inlet 120 through a wall 112 of the body 110 and a fluid outlet 130 downstream of the fluid inlet 120. The fluid inlet 120 has a length that extends in the direction of the longitudinal axis A-A of the nozzle and is located between a first or upstream end 100a and a second or downstream end 100b of the nozzle 100.

In this example, the fluid outlet 130 is slot shaped and the length of the slot B-B is greater than the diameter C-C of the body 110. In this example, the fluid inlet 120 comprises a number of discrete apertures 120a separated by reinforcing struts 120b. The apertures 120a extend circumferentially about the longitudinal axis of the nozzle 100.

In use, fluid flows into the fluid inlet 120 along the length of the body 110 along fluid flow path 160 and out through the fluid outlet 130. The upstream end 100a of the nozzle 100 is closed by an end wall 140 thus fluid can only enter the nozzle 100 via the fluid inlet 120 when in use.

Figures 2a to 2c show the nozzle 100 attached to a hairdryer 200. The nozzle 100 is inserted into the downstream end 200b of the hairdryer until a stop 210 is reached. In this position, the fluid inlet 120 of the nozzle 100 is in fluid communication with a primary fluid outlet 230 of the hairdryer 200. The nozzle is an attachment for adjusting at least one parameter of the fluid flow emitted from the hairdryer and the downstream end 100b of the nozzle protrudes from the downstream end 200b of the hairdryer 200.

The hairdryer 200 has a handle 204, 206 and a body 202 which comprises a duct 282, 284. A primary fluid flow path 260 starts at a primary inlet 220 which in this example is located at the upstream end 200a of the hairdryer i.e. at the distal end of the hairdryer from the fluid outlet 200b. Fluid is drawn into the primary fluid inlet 220 by a fan unit 250, fluid flows along primary fluid flow path 260 located on the inside of the outer body 202 of the hairdryer between the outer body 202 and the duct 282, along a first handle portion 204 to the fan unit 250.

The fan unit 250 includes a fan and a motor. The fluid is drawn through the fan unit 250, along a second handle portion 206 and returns to the body 202 of the hairdryer in an inner tier 260a of the body. The inner tier 260a of the body 202 is nested within the primary fluid flow path 260 between the primary fluid flow path 260 and the duct 282

and includes a heater 208. The heater 208 is annular and heats the fluid that flows through the inner tier 260a directly. Downstream of the heater 208, fluid exits the primary fluid flow path at the primary outlet 230.

With the nozzle 100 attached to the hairdryer 200, the primary outlet 230 is in fluid communication with the fluid inlet 120 of the nozzle 100. Fluid that flows out of the primary outlet 230 flows along the body 110 of the nozzle 100 to the nozzle outlet 130.

The hairdryer 200 has a second fluid flow path 280. This second fluid flow path 280 flows from a second inlet 270 along the length of the body 202 of the hairdryer through duct 282 to a second outlet 290 outlet where, when there is no nozzle attached to the hairdryer, fluid flowing through the second fluid flow path 280 mixes with the primary fluid at the primary fluid outlet 230. This mixed flow continues along duct 284 to the fluid outlet 200b of the hairdryer. The fluid that flows through the second fluid flow path 280 is not processed by the fan unit 250; it is entrained by the primary fluid flow through the primary fluid flow path 260 when the fan unit is switched on.

The second fluid flow path 280 can be considered to flow along a tube defined by an upstream duct 282 and a downstream duct 284 where the primary outlet 230 is an aperture in the tube between the ducts 282 and 284. The nozzle is partially inserted into the tube defined by the ducts 284, 282. In this example the nozzle 100 is slidably inserted into hairdryer outlet 200b along downstream duct 284 past the aperture or primary fluid outlet 230 into the upstream duct 282. The nozzle 100 is retained in the duct 282, 284 by friction. In this example, the friction is provided between stop 210 and the duct 284 of the hairdryer.

Nozzle 100 is a single flow path nozzle and only fluid that has been processed by the fan unit 250 from the primary fluid flow path 260 flows through the nozzle 100. The end wall 140 of the nozzle 100 is a barrier that blocks the second fluid flow path 280 and thereby prevents entrainment into the second fluid flow path when the nozzle is

properly attached to the hairdryer. The nozzle 100 prevents emission of the entrained fluid and inhibits the generation of the entrained fluid.

As an alternative, the nozzle could extend into downstream duct 284 of the hairdryer 200 but not as far as the primary fluid outlet 230. In this example, fluid from the primary fluid flow path 260 would mix with entrained fluid from the second fluid flow path 280 at the primary fluid outlet 230 and the mixed flow would enter the nozzle at the upstream end of the nozzle and continue to the fluid outlet 130 of the nozzle producing a combined fluid flow at the nozzle outlet.

It is advantageous that the end wall 140 of the nozzle 100 comprises a valve. This assists if the nozzle 100 is inserted into the hairdryer whilst the hairdryer is switch on. The valve is designed to open and let the full fluid flow through it this is for example around 22 l/s. Referring now to Figures 6a to 6d, the operation of a valve in the nozzle will now be described. When the nozzle 100 is initially inserted into the outlet end 200b of a hairdryer 200 as is shown in Figure 6a, the valve 150 in the upstream end wall 140 of the nozzle 100 opens. The valve 150 is attached to a central strut 152 of the end wall 140 and when the force of the fluid flow is high enough the valve 150 folds into the nozzle 100 to make an opening 154, for example an annular opening, in the end wall 140 of the nozzle 100. The valve 150 is pushed downstream by the force of the fluid flowing into the nozzle 100.

Once the inlet 120 is partially aligned with the primary outlet 230 of the hairdryer 200, some of the primary flow will flow through the inlet 120 which results in a reduction in the pressure at the valve 150. Once at least the majority of the primary flow goes through the inlet 120, the valve 150 will shut as is shown in Figure 6c. When the valve 150 is shut the end wall 140 of the nozzle is blocked so fluid cannot flow through the second fluid flow path 280. Thus the only flow is from the primary outlet 230 of primary fluid flow path 260 into the inlet 120 of the nozzle.

Nozzle 100 is a hot styling nozzle. Although around only half of the normal flow through the hairdryer will flow through the nozzle to the outlet 130 the velocity of the flow is increased by the shape of the nozzle so a user will feel a similar force to that of normal flow. Normal flow is the total flow through the hairdryer without an attachment i.e. the primary flow plus the second or entrained flow. The shape of the nozzle outlet 130 reduces the cross sectional area compared with the hairdryer outlet 200b which increases the velocity of the flow.

Whilst the hairdryer shown has the primary fluid flow path flowing through the handles of the hairdryer, this is not required. The primary fluid flow path can alternatively flow from the primary inlet 220 along the body 202 through the heater to the primary fluid outlet 230 and thence into the nozzle.

Figures 11a to 11f show a nozzle 800 and a nozzle 800 attached to a hairdryer 200. In this embodiment, components illustrated and described with respect to Figures 2a to 2c have like reference numbers. The nozzle is similar to nozzle 100 but instead of a valve 150, this nozzle 800 is provided with a slanted upstream end 800a and fluid inlet 820 i.e. the fluid inlet 820 has a length that extends in the direction of the longitudinal axis of the nozzle 800 and varies about the longitudinal axis of the nozzle. The fluid inlet 820 is defined by a side wall 822 of the body 810 of the nozzle 800 where the side wall 822 is substantially orthogonal to the wall 812 of the body and the longitudinal axis A-A of the nozzle 800.

When the nozzle 800 is inserted into the outlet end 200b of a hairdryer 200, the fluid inlet 820 gradually aligns with the primary fluid outlet 230 of the hairdryer (Figure 11f). When the nozzle 800 is fully inserted as is shown in Figure 11d, the whole of the annular primary fluid outlet 230 is in fluid communication with the nozzle inlet 820.

There will be an initial resistance to the insertion of the nozzle 800 when the hairdryer is switched on as there will be both primary and second fluid flowing through the hairdryer however, the entrainment effect will gradually reduce as the hairdryer outlet

end 200b is blocked by the slanted nozzle inlet end 800a until the hairdryer outlet end 800b is completely blocked. At this point, primary flow from the primary fluid outlet 230 that cannot enter the fluid inlet 820 is redirected down a second fluid flow path 280 towards the rear or upstream end 200a of the hairdryer. So, when the nozzle is initially inserted the primary flow cannot exit the downstream end 800b of the nozzle but can flow in a reverse direction along the second fluid flow path 280. This feature provides protection from the heater overheating during the nozzle insertion process as there will always be some fluid flowing through the primary fluid flow path.

Figures 3a to 3f show a double flow path nozzle 300 comprising a generally tubular body 310 having an outer wall 312 and an inner wall 382. The outer wall 312 extends from an upstream end 300a to a downstream end 300b of the nozzle 300 and about the inner wall 382. The outer wall 312 has an aperture which forms a fluid inlet 320 and a fluid outlet 330 is provided downstream of the fluid inlet 320. In use, fluid flows into the fluid inlet 320 along the length of the body 310 along fluid flow path 360 provided between the outer wall 312 and the inner wall 382 and out through the fluid outlet 330. The inner wall 382 is generally tubular however, at the fluid inlet 320 it curves outwards 322 and joins the outer wall 312 forming an upstream end to the fluid inlet 320.

A further inlet 370 is provided in the upstream end 300a of the nozzle 300 and fluid flows along a further fluid flow path 380 to further fluid outlet 390. The further fluid flow path 380 flows within a tube defined by the inner wall 382. The further fluid flow path 380 is nested within the fluid flow path 360 and surrounded by the fluid flow path 360. The fluid outlet 330 and further fluid outlet 390 have substantially the same shape and configuration and in this example, comprise a rounded slot with a central wider region. This means that fluid flow is directed mainly in the central region but that the drying area is increased by the slot portion.

The fluid outlet 330 and the further fluid outlet 390 can comprise alternative shapes such as a simple double slot 330a, 390a as is shown in Figure 3g.

In use, when the nozzle is attached to a hairdryer the fluid inlet is in fluid communication with a primary fluid outlet of the hairdryer and the further fluid inlet is in fluid communication with a second fluid outlet of the hairdryer. Having two fluid flow paths is advantageous as it enables manipulation of the fluid outflow to create different styling conditions depending on user requirements.

Figures 4a to 4c show the nozzle 300 attached to a hairdryer 200. In this embodiment, components illustrated and described with respect to Figures 2a to 3f have like reference numbers. As previously described, a primary fluid flow path 260, 260a has a primary inlet 220 at an upstream 220a end of the hairdryer 200, continues along the length of the body 202 of the hairdryer, down a first handle 204, through the fan unit 250, up a second handle 206, back into the body 202 in an inner tier 260a through the heater 208 and to the primary outlet 230.

A second fluid flow path 280 is also provided and travels straight through the body 202 of the hairdryer 200 from a second inlet 270 to a second outlet 290. With the double flow path nozzle 300 attached to the outlet end 200b of the hairdryer 200, both the primary and second fluids flow from their respective inlet 220, 270 to a nozzle outlet 330, 390.

When nozzle 300 is attached to the hairdryer 200, fluid that flows through the primary fluid flow path 260 flows to the primary outlet 230 enters the inlet 320 of the nozzle 300, flows along the fluid flow path 360 between the outer wall 312 and the inner wall 382 to an outlet 330 of the nozzle 300 and appliance. Fluid that flows through the second fluid flow path 280 flows towards the second outlet 290, enters the further inlet 370 of the nozzle 300 and flows along further fluid flow path 380 within the inner wall 382 to the further outlet 390 of the nozzle 300.

In this embodiment, the further flow path 380 is central to and concentric with the fluid flow path 360 i.e. the fluid flow path extends about the further fluid flow path. The further outlet 390 is surrounded by the outlet 330 and this results in a central cool fluid

path with an outer perimeter of hot fluid exiting the nozzle. In order that the integrity of the hot and cold fluid flow paths are maintained and that they are isolated within the hairdryer and nozzle, the inserted nozzle 300 must seal the primary fluid outlet 330 to prevent mixing of the hot and cold flows. In this example, the outer wall 312 is provided with an upstanding collar 312a that extends about the outer wall 312 and seals the duct 282 thus preventing ingress of fluid from the second fluid flow path 280 into the nozzle inlet 320 and egress from the primary fluid outlet 230 into the second fluid flow path 280. The collar 312a of outer wall 312 provides the friction between the nozzle and the hairdryer that retains the nozzle within the hairdryer.

A second collar 312b is provided downstream of the fluid inlet 320 and this seals the nozzle with respect to hairdryer duct 284 and the hairdryer outlet 200b that surrounds the nozzle outlet 330. This is to stop leakage around the nozzle and to provide a more focused outflow from the nozzle.

Figures 5a to 5f show various representations of a laminar nozzle according to the invention. A nozzle 400 has a body 410 with a generally tubular outer wall 412, and an inner wall 424 which divides the body 410 substantially in half lengthways. The outer wall 412 has an inlet 420 through the wall 412 and an outlet 430 downstream of the inlet and connected to the inlet 420 by a fluid flow path 460. The inlet 420 is a single semicircular aperture in the outer wall 412 and is defined by the outer wall 412, a side wall 422 and the inner wall 424. The inlet 420 is located between a downstream end 400b and an upstream end 400a of the nozzle 400. The side wall 422 connects between the outer wall 410 and the inner wall 424 and together with the outer wall 412 and the inner wall 424 defines the fluid flow path 460.

A further inlet 470 is provided in the upstream end 400a of the nozzle 400. In this example the further inlet 470 is substantially circular to provide a fluid connection with substantially circular hairdryer ducting 284 (for example at the second fluid outlet 290 of Figure 2c). The further inlet 470 is in fluid communication with a further outlet 490 via a further fluid flow path 480.

In order to create a laminar flow out of the nozzle 400, the two outlets 430, 490 of the nozzle are situated one on top of the other or side by side depending on the orientation of the nozzle i.e. they are coplanar and located on opposing sides of the nozzle. The fluid flow path 460 and further fluid flow path 480 are also bilateral along the length of the nozzle from the inlet 420. Upstream of inlet 420, where there is only the further fluid flow path 480, the further fluid flow path 480 extends from a semicircular cross-section to a circular cross-section at the further inlet 470. This change in shape is facilitated by the side wall 422 that forms part of the fluid inlet 420.

As the nozzle 400 provides fluid communication with an annular primary flow, the diameter of the further fluid flow path 480 at the fluid inlet 420 is reduced slightly enabling fluid that exits the primary outlet of the hairdryer radially spaced 420a away from the inlet 420 to flow around the circumference of the nozzle and into the inlet 420. Without this feature, flow from the primary outlet would be restricted at the inlet.

In addition, a collar 412a is provided around the outer wall 412 at or near the upstream end of the fluid inlet 420 to seal the nozzle 400 against internal ducting 284 of a hairdryer to prevent any primary flow from a hairdryer mixing with entrained flow.

Figures 7a to 7j show a further double flow path nozzle 500 and the nozzle attached to a hairdryer 200. In this nozzle 500, the relative positions of the inlets and outlets are reversed producing an inside out nozzle.

The nozzle 500 has a generally tubular body 510 having a fluid inlet 520 through an outer wall 512 of the body 510 and a fluid outlet 530 downstream of the fluid inlet 520. In use, fluid flows into the fluid inlet 520 along the length of the body 510 along fluid flow path 560 and out through the fluid outlet 530. A further inlet 570 is provided in the upstream end 500a of the nozzle 500 and fluid flows from this further inlet 570 along a further fluid flow path 580 to a further fluid outlet 590.

Referring now to Figures 7g to 7j, when the nozzle 500 is inserted into a hairdryer 200, the inlet 520 aligns with a primary fluid outlet 230 of the hairdryer. Thus, fluid flows in the hairdryer from the primary fluid inlet 220, through the primary flow path 260 past the fan unit 250 and heater 208 to a primary fluid outlet 230 then into the fluid inlet 520 of the nozzle 500 along fluid flow path 560 to fluid outlet 530.

The further inlet 570 of the nozzle 500 aligns with and is inserted into a second fluid outlet 290 of the hairdryer 200. Fluid that is drawn into the hairdryer along a second fluid flow path 280 by the action of the fan unit 250 on the primary fluid flow path 260 enters the hairdryer at a second fluid inlet 270, flows along a second fluid flow path 280 towards a second fluid outlet 290. The fluid in the second fluid flow path 280 enters the further nozzle inlet 570, flows along a further fluid flow path 580 to a further fluid outlet 590.

The fluid outlet 530 and further fluid outlet 590 are arranged so that the fluid from the primary fluid flow path 260 i.e. the fluid that has been processed by the fan unit 250 and heater by the heater 208 is surrounded by fluid from the second fluid flow path i.e. cool entrained fluid. Thus, the further outlet 590 surrounds the outlet 530 and this results in a central hot fluid path with an outer perimeter of cool fluid exiting the nozzle. In this example, the outlets 530, 590 of the nozzle 500 are slot shaped but they could be circular.

In order to achieve this, the further inlet 570 has a circular opening to match shape and size of the second fluid outlet 290, the further fluid flow path 580 is initially a pair of slots or a V-shaped channel 580a (Figures 7b, 7d, and 7f in particular) formed from the outer wall 512 of the nozzle 500 and an inner wall 524 that divides the two fluid flow paths 560, 580 within the nozzle 500. Downstream of the fluid inlet 520, the inner wall 524 becomes circular and generally concentric to the outer wall 512 and the further fluid flow path 580 becomes annular in shape to form the radially outer outlet 590 of the nozzle 500 i.e. the further outlet 590 surrounds the fluid outlet 530.

Inlet 520 is annular and has a mouth 520a formed between the inner wall 524 and the outer wall 512 of the nozzle. The mouth 520a provides an entrance to the fluid flow path 560 which is generally circular within the body 510 of the nozzle 500 and surrounded by the further fluid flow path 580 downstream of the inlet 520.

Figures 8a to 8g show an alternate single flow path nozzle 600 having a generally tubular body 610, a first or upstream end 600a and a second or downstream end 600b. There is a fluid inlet 620 in an outer wall 612 of the body 610 between the first end 600a and the second end 600b of the nozzle 600 and a fluid outlet 630 downstream of the fluid inlet 620. In this example, the fluid outlet 630 is ring shaped or annular and is formed by an inner wall 614 of the nozzle 600 and the outer wall 612.

The fluid inlet 620 is an opening in the outer wall 612 of the nozzle and is defined by an aperture formed from a slanted edge 622b of the outer wall and a curved side wall 622 provided at the upstream end of the fluid inlet which connects the outer wall 612 and the inner wall 614. The slanted edge of the outer wall is slanted in the direction of fluid flow to reduce turbulence and pressure losses as the primary flow enters the nozzle.

The outer wall 612 surrounds inner wall 614 and together walls 612, 614 define a fluid flow path 660 through the generally tubular body 610 from the inlet 620 to the outlet 630. In the vicinity of the outlet 630, the inner wall curves outwards 614b and increases in diameter causing a reduction in the cross section of the fluid flow path at the outlet 630. The inner wall 614 continues beyond the outlet 630 and the end of the outer wall 612 of the nozzle 600 to a downstream nozzle end 600b. The inner wall 614b is convex and is a Coanda surface i.e. it causes fluid that flows through the fluid flow path 660 to hug the surface of the inner wall 614b as it curves forming an annular flow at the outlet 630 and downstream nozzle end 600b. In addition the Coanda surface 614 is arranged so a primary fluid flow exiting the outlet 630 is amplified by the Coanda effect.

The hairdryer achieves the output and cooling effect described above with a nozzle which includes a Coanda surface to provide an amplifying region utilising the Coanda

effect. A Coanda surface is a known type of surface over which fluid flow exiting an output orifice close to the surface exhibits the Coanda effect. The fluid tends to flow over the surface closely, almost 'clinging to' or 'hugging' the surface. The Coanda effect is already a proven, well documented method of entrainment whereby a primary air flow is directed over the Coanda surface. A description of the features of a Coanda surface, and the effect of fluid flow over a Coanda surface, can be found in articles such as Reba, Scientific American, Volume 214, June 1963 pages 84 to 92.

Advantageously, the assembly results in the entrainment of air surrounding the mouth of the nozzle such that the primary air flow is amplified by at least 15%, whilst a smooth overall output is maintained

By encouraging the fluid at the outlet 630 to flow along 616 the curved surface 614b of the inner wall to the downstream nozzle end 600b, fluid is entrained 618 from outside the hairdryer 200 (Figure 8c) by the Coanda effect. This action of entrainment increases the flow of air at the downstream nozzle end 600b, thus the volume of fluid flowing at the downstream nozzle end 600b is magnified by the entrainment above what is processed by the hairdryer 200 through a fan unit 250 and heater 208.

When the nozzle 600 is attached to a hairdryer 200 as shown in Figure 8a, the fluid inlet 620 aligns with a primary fluid outlet 230 of the hairdryer. Hairdryer 200 has a second fluid flow path 280 through a central duct 282 but this is blocked by the nozzle 600. In the example shown in Figure 2a, nozzle 100 blocked the second fluid flow path 280 at the upstream end 100a of the nozzle. In this example, the nozzle 600 uses an upstream continuation of curved wall 614b which curves inwards to form a rounded end 616 which blocks the second fluid flow path.

In order to seal the nozzle fluid flow path 660 with respect to the primary fluid outlet 230, the outer wall 612 of the nozzle is provided with a collar 612a. The collar 612a is upstanding from the outer wall 612 so has a larger diameter than the outer wall and is designed to fit with ducting 282 within the hairdryer 200. The collar 612a is upstream

of the fluid inlet 620 of the nozzle 600. A second collar 612b is ideally also provided downstream of the fluid inlet 620 and prevents fluid from the primary outlet 230 of the hairdryer flowing between the outer wall 612 of the nozzle and the hairdryer outlet 200b.

Figures 9a to 9g show an alternate double flow path nozzle 700 on a hairdryer 200. In this embodiment, components illustrated and described with respect to Figures 8a to 8g have like reference numbers. In this example, in addition to a fluid flow path 660 from an inlet 620 to an outlet 630, a further fluid flow path 780 is provided. The inner wall 714 comprises a tube or bore through the nozzle 700 through which a fluid can flow from a further inlet 770 to a further outlet 790 along a further fluid flow path 780. In this example, adjacent to and upstream of the fluid outlet 630 the inner wall 714 splits into an outer curved wall 714b along which fluid from the fluid flow path 660 flows to fluid outlet 630 and an inner straight wall 714a which continues to a further fluid outlet 790.

When the nozzle 700 is attached to a hairdryer a primary flow from a primary inlet 220 to a primary outlet 230 along a primary flow path 260 is in fluid communication with the nozzle inlet 620. Fluid flows from the nozzle inlet 620 along fluid flow path 660 to nozzle outlet 630. As the surface of the outer curved wall 714b is a Coanda surface, fluid that flows out of the outlet 630 is drawn to the surface and amplified by the Coanda effect which entrains fluid 618 from outside of the nozzle along the nozzle to a nozzle end 600b. In addition, a second fluid flow path 280 is provided in the hairdryer 200 through which fluid is entrained by the action of fluid flowing in the primary fluid flow path 260,660 i.e. fluid that is drawn into the primary fluid flow path 260 directly by the fan unit 250. This second fluid flow path 280 has an inlet 270 and an outlet 290. The outlet 290 is in fluid communication with the further inlet 770 of the nozzle 700. So fluid that is entrained into the second fluid flow path 280 by the action of the fan unit 250 flows along a further fluid flow path 780 the boundaries of which are defined by the inner wall 714, 714b of the nozzle 700 to a further outlet 790.

Thus, in this example the hairdryer emits a hot annular fluid which has a central cool core from the internally entrained fluid and an outer cool ring from the externally entrained fluid.

Figures 10a to 10e show a further single flow path nozzle 10 which is similar to the one described with respect to Figure 8. In this nozzle a fluid flow path 60 is provided from an inlet 20 to an outlet 30. The inlet 20 is through an outer wall 12 of a generally tubular body 14 of the nozzle 10 between a first or upstream end 10a and a second or downstream end 10b of the nozzle 10. The outlet 30 is a slit formed between the outer wall 12 and an inner wall 32 of the nozzle.

The inner wall 32 is convex and formed by a bung 34 which is located in the downstream end 12b of the outer wall 12. Fluid that flows through the fluid flow path 60 is funnelled by an upstream end 34a of the bung 34 towards the outlet 30. As the inner wall 32 is convex, fluid that flows out of the outlet 30 is drawn to the surface 32 by the Coanda effect and this entrains fluid 18 from the environment around the nozzle 10.

The shape of the bung 34 at the downstream end 34b is generally rectangular so the fluid exits the nozzle in a generally rectangular profile.

The rear or upstream end 10a of the nozzle has a cone shaped bung 70 so when the nozzle 10 is used in conjunction with hairdryer 200 (not shown), fluid from the second fluid flow path 280 is blocked by the cone shaped bung 70.

Figures 12a to 12c show a nozzle and hairdryer combination where the nozzle 1100 has a generally tubular body 1103 with a longitudinal axis D-D extending along the length of the body and having a first inlet 1102 and a second inlet 1104 into the fluid flow path 1106 of the nozzle 1100. The hairdryer 1120 has a corresponding primary outlet 1122 and second primary outlet 1124 which provide fluid communication with the first inlet 1102 and the second inlet 1104 respectively. This arrangement means that the primary

flow through the primary fluid flow path 1126 of the hairdryer has two outlet regions. The use of a nozzle 1100 on a hairdryer 1120 introduces a restriction to the flow through the hairdryer resulting in a drop in output by the hairdryer of up to around 4l/s. By introducing a second primary outlet 1124 for the primary flow the drop in output is mitigated.

The second inlet 1104 is similar to first inlet 1102 in that is extends in the direction of the longitudinal axis of the nozzle and radially round through outer wall 1110 of the generally tubular body 1103 of the nozzle 1100. The second inlet 1104 consists of a number of discrete apertures 1104a separated by reinforcing struts 1104b.

Referring to Figure 12a, which shows a portion of a hairdryer having a primary fluid outlet comprising first 1122 and second 1124 primary outlets when there is no nozzle attached to the hairdryer 1120, the second primary outlet 1124 is closed as it is not required to increase flow through the primary fluid flow path 1126 of the hairdryer 1120. A closure 1130 is provided which occludes, blocks, covers or restricts the second primary outlet 1124. The closure 1130 is biased into the closed position by a spring 1132, in this example, which pushes against the closure 1124 to occlude the second primary outlet 1124. The first 1122 and second 1124 primary outlets both comprise apertures and are spaced apart along the longitudinal axis D-D of the nozzle 1100.

Referring now to Figure 12c, the nozzle 1100 is provided with a lip 1108 which is upstanding from the generally tubular wall 1101 of the nozzle. The lip 1108 can be continuous or discontinuous around the perimeter of the generally tubular outer wall 1105 of the body 1103 of the nozzle 1100 and is of sufficient depth or height upstanding from the wall 1105 to firstly engage with the closure 1130 and secondly to allow the nozzle to be inserted up to the point of engagement of the lip 1108 with the closure 1130 without snagging of the nozzle 1100.

The lip in this example is formed from an O-ring which is held in a recess formed in the body 1103 of the nozzle. Alternatives will be apparent to the skilled person and

include, but are not limited to an integral moulded lip, a plastic/hard rubber ring, a living hinge, an overmoulded lip and a push fit arrangement.

The closure 1130 is ring shaped and has an S-shaped profile. Central to the ring is an aperture 1126 to enable fluid flowing through the primary fluid flow path 1126 of the hairdryer to exit the downstream end 1120b of the hairdryer from the first primary fluid outlet 1122 of the hairdryer. A first end 1125 of the S-shaped profile of the closure 1130 engages with one end of spring 1132 and provides the means by which the closure 1130 is biased into an occluded or closed position. A second end 1127 of the S-shaped profile protrudes into the fluid flow path 1129 of the hairdryer between the primary outlet 1122 and the downstream end 1120b of the hairdryer. This second end 1127 of the closure 1130 engages with the lip 1108 of the nozzle 1100 when the nozzle is inserted far enough into the downstream end 1120b of the hairdryer 1120 (see Figure 12b) and as the nozzle is inserted past the point of engagement, the closure 1130 is pushed against the action of the spring 1132 and slides, opening the second primary outlet 1124 to allow fluid flowing in the primary fluid flow path 1126 to exit via either the first primary outlet 1122 or the second primary outlet 1124 thus mitigating any restriction on fluid flow through the hairdryer from the use of a nozzle.

In order to prevent egress of fluid from the primary fluid flow path 1126 from the hairdryer outlet 1120b around the outside of the nozzle 1100. The outer wall 1103 is provided with an upstanding collar 1110 that extends about the outer wall 1103 and seals the nozzle with respect to the hairdryer outlet 1120. The collar 1110 additionally provides a point of friction between the nozzle and the hairdryer that retains the nozzle within the hairdryer.

The nozzle 1100 has a downstream end 110b where fluid is output through a nozzle outlet 1112 and an upstream end 1100a. In one embodiment the upstream end 1100b of the nozzle comprises an end wall 1114. In this embodiment, the primary flow from the hairdryer is the only flow that is output from the nozzle outlet 1112. Alternatively, the upstream end 1100a of the nozzle comprises an opening 1116 which provides a further

nozzle inlet for a second fluid flow path 1140 in the hairdryer. The second fluid flow path is for fluid that is entrained into the hairdryer by the action of the fan unit (not shown) drawing fluid into the primary fluid flow path 1126. The entrained fluid enters the hairdryer at a second inlet 1142, flows along the second fluid flow path 1140 into the further nozzle inlet 1116. The entrained fluid mixes with primary fluid flow within the nozzle before exiting at the nozzle outlet 1112. Alternatively, the second fluid flow is provided with a further fluid flow path through the nozzle as described with respect to Figures 3, 4, 5, 7 and 9 to provide isolated hot and cool fluid from the nozzle.

Figures 13a to 13d show a different arrangement. In this example, the second primary outlet 1174 from the primary fluid flow path 1176 is in an end wall 1160 of the hairdryer 1150 rather than through an internal wall.

Referring now to Figure 13a, the hairdryer has a generally tubular body 1152 having an inner wall 1154a 1154b and an outer or external wall 1156. At the downstream end 1150b of the hairdryer an end wall 1160, 1180 is provided between the inner 1154b and outer 1156 wall. The end wall is orthogonal to a longitudinal axis E-E of the body 1152 and includes a fixed portion 1160 and a moveable portion or closure 1180. The closure 1180 is annular and is biased by a spring 1182 to be substantially flush with the fixed portion of the end wall 1160. When a nozzle is inserted into the hairdryer 1150, the closure 1180 is pushed against the spring 1182, causing the spring to compress and open the second primary outlet 1174. In this example, the closure 1180 is adjacent to the inner wall 1154b of the hairdryer however the closure could be located anywhere between the inner and outer walls. In addition, the closure need not be continuous around the end wall.

Referring now to Figure 13d, the nozzle 1190 has a generally tubular body 1192 having an outer wall 1194. A first inlet 1196 is provided in the outer wall 1194 between an upstream or first end 1190a and a downstream or second end 1190b of the nozzle but towards the upstream end 1190a of the nozzle. This first inlet 1196 is in fluid communication with a first primary outlet 1172 of the hairdryer provided in the inner

wall 1154 of the body of the hairdryer and a fluid flow path 1197 is provided through the nozzle from the first inlet 1196 through the body 1192 of the nozzle to a nozzle outlet 1198 at the downstream end 1190b of the nozzle. The outer wall 1194 of the nozzle is designed to be insertable into the outlet end 1150b of the hairdryer. At the downstream end 1194b of the outer wall 1194 a hook shaped lip 1193 is provided. When the nozzle 1190 is inserted in the hairdryer, the hooked shaped lip 1193 covers the end of inner wall 1154b of the hairdryer and engages with closure 1180 pushing it against the action of the spring 1182. In order to provide a second fluid flow path 1184 from the second opening 1174 to the downstream end 1190b of the nozzle, a collar 1195 is provided on the nozzle. When the nozzle is inserted into the hairdryer, the collar 1195 fits over the outer wall 1156 of the body 1152 of the hairdryer and forms together with the fixed portion of the end wall 1160 and the hook shaped lip 1193 a second fluid inlet 1184 for the nozzle which combines with fluid from the first inlet 1196 in the fluid flow path 1197 within the nozzle.

The nozzle 1190 is inserted as shown in Figures 13b and 13c; the lip 1193 engages with the closure 1180 and forces the closure back against the action of the spring 1182 opening the second primary outlet 1174.

Figures 14a to 14d show an alternate arrangement for mitigating flow restriction when a nozzle 1200 is used on a hairdryer 1252. In this example, insertion of a nozzle 1200 results in the primary fluid outlet 1250 of the hairdryer 1252 increasing in size.

The nozzle 1200 has a generally tubular body 1202 with a longitudinal axis F-F extending along the length of the body 1202. A fluid inlet 1208 comprising a number of apertures 1210 separated by struts 1212 has a length that extends in the direction of the longitudinal axis F-F of the nozzle 1200 and is located between a first or upstream end 1200a and a second or downstream end 1200b of the nozzle 1200 in an outer wall 1204 of the body 1202.

The hairdryer 1252 has a generally tubular body having an inner wall 1254a, 1254b, an outer wall 1256 and a primary fluid flow path 1258 provided therebetween. The primary fluid flow path 1258 flows from a primary inlet 1220 to a primary outlet 1250 provided as an aperture between two sections of the inner wall 1254a, 1254b and then through a central bore 1260 in the body of the hairdryer 1252 to a hairdryer outlet 1262.

The primary outlet 1250 is formed from a fixed surface 1270 attached to the downstream section of inner wall 1254b and a moveable surface 1272 which is connected to an upstream section of the inner wall 1254a. In order that the primary outlet 1250 can be opened, a moveable portion 1254aa of the upstream inner wall 1254a is slidably moveable against the direction of fluid flow at the primary fluid outlet 1250 towards the upstream end 1252a of the hairdryer 1252. The upstream section of the inner wall 1254a and the moveable portion 1254aa form a lap joint 1282 (Figure 14d) which is biased apart by a spring 1280 (Figures 14a and 14b). The moveable portion 1254aa has an internal surface which describes a duct 1262 within the hairdryer and is provided with a rim or lip 1264 which is upstanding from the duct 1262 and extends radially into the duct 1262. When a nozzle 1200 is inserted into the outlet 1262 of the hairdryer, the upstream end 1200a of the outer wall 1204 of the nozzle engages with the rim or lip 1262 on the moveable portion 1254aa and pushes the moveable portion 1254aa against the biasing action of the spring 1280 so the moveable portion 1254aa slides towards the upstream inner wall 1254a and opens the primary fluid outlet 1250 (Figures 14c and 14d).

When the nozzle 1200 is subsequently removed, the moveable portion 1254aa slides back towards the downstream end 1252b of the hairdryer 1252 causing the primary outlet 1250 to reduce back to its' original size.

Figures 15a and 15b show a hairdryer 170 and 15c and 15d a nozzle 190 attached to the hairdryer 170. The hairdryer 170 has a body 177 that defines a duct 176, a pair of handles 172, 173, a primary inlet 171 in the upstream end 170a of the hairdryer and a fluid outlet 178 in the downstream end 170b of the hairdryer.

A primary fluid is drawn into the primary inlet 171 and flows along a first handle 172 though a fan unit (not shown) which draws the fluid in, along a second handle 173 through a heater 174 and out of a primary outlet 175 into a duct 176 of the hairdryer to the fluid outlet 178. A second fluid flow path 180 is provided from a second inlet 181 at the upstream end 170a of the hairdryer through the duct 176 to the hairdryer outlet 178. Fluid is entrained into the second fluid flow path 180 by the action of the fan unit (not shown) drawing fluid into the primary inlet 171 to the primary outlet 175 and mixes or combines with the primary flow at the primary fluid outlet 175. The fluid that flows through the duct 176 is a combined primary and entrained flow.

In this example, not all of the primary flow flows through the heater 174 to the primary outlet 175. A portion of the primary flow bypasses the heater 174 though an internal cooling duct 179 which is formed where the second handle 173 joins the body 177 and surrounds the duct 176. The internal cooling duct 179 extends around the duct 176 from the primary outlet 175 to the downstream end 170b of the hairdryer and around 1l/s of fluid bleeds through an annular opening 182 of the internal cooling duct 179 which surrounds the fluid outlet 178. The internal cooling duct 179 has two functions, firstly it provides a insulation for the tubular wall that forms the body 177 and secondly it provides a cool annular ring of fluid that surrounds the combined fluid flow out of the fluid outlet 178.

Nozzle 190 (Figure 15c) is essentially nozzle 100 (Figures 1a to 1f) with the addition of an outer collar 191 adapted to engage with the annular opening 182 of the hairdryer 170 and provide a cooling fluid flow path 192 from the annular opening 182 along a cooling fluid flow path 192 to a cooling outlet 193 of the nozzle 190. The same reference numerals have been used for features that have been described with reference to Figures 1a to 1f and that are in common with nozzle 190.

The nozzle 190 has a generally tubular body 110 which is insertable into a hairdryer at an upstream end 100b. The downstream end 100b of the nozzle is generally rectangular

and the nozzle 190 changes shape from tubular to rectangular outside the hairdryer 170. The collar 191 surrounds the body 110 from the downstream end 100b of the nozzle to the point where the nozzle is inserted into the duct 176 of the hairdryer and generally maintains a constant distance between the body 110 and the collar 191

When a nozzle 190 is attached to the hairdryer 170 (Figures 15c and 15d), the collar upstream end 191a abuts with the downstream end of the tubular body 177a of the hairdryer to provide fluid communication between the annular opening 182 of the internal cooling duct 179 and the cooling fluid flow path 192 of the nozzle 190 so fluid that flows along the internal cooling duct 179 flows into the cooling fluid flow path 192 to the nozzle cooling outlet 193.

As the nozzle 190 is a hot styling nozzle so a barrier 140 is provided to prevent entrainment along a second fluid flow path 180 of the hairdryer, all the fluid that flows out of the nozzle outlet 130 is hot. By having a cooling fluid flow path 192 which surrounds the nozzle fluid flow path 160 and the nozzle outlet 130, the part of the nozzle that is gripped by a user to remove the nozzle 190 from the hairdryer 170 is cooled and the hot flow from the nozzle outlet 130 is surrounded by a cooling flow.

Figures 16a, 16b, 16h to 16k all show a hairdryer 670 having a primary fluid flow path 671 which is processed by a fan unit 672 and a heater 673 second fluid flow path 680 which comprises fluid that has been entrained into the hairdryer by the action of the fan unit 672 drawing fluid into the primary fluid flow path 671.

Referring in particular to Figures 16h and 16i, a primary fluid flow is drawn into the primary fluid flow path 671 at a primary inlet 674 and flows along a first handle 676 though a fan unit 672, along a second handle 677 through a heater 673 and out of a primary outlet 675 into a duct 678 of the hairdryer to the fluid outlet 679. A second fluid flow path 680 is provided from a second inlet 681 at the upstream end 670a of the hairdryer through the duct 678 to the hairdryer outlet 679. Fluid is entrained into the second fluid flow path 680 by the action of the fan unit 672 drawing fluid into the

primary inlet 674 to the primary outlet 675 and mixes or combines with the primary flow at the primary fluid outlet 675. The fluid that flows through the duct 678 to the outlet 679 is a combined primary and entrained flow.

The primary fluid outlet 675 is relatively large and unrestricted. In order to encourage entrainment into the second fluid flow path 680, an attachment 685 is provided. The attachment 685 (Figures 16l and 16m) is inserted into the hairdryer outlet 679 and comprises a generally tubular body 686 between a first or upstream end 685a and a second or downstream end 685b. In order to encourage entrainment by the Coanda effect, the attachment 685 is provided with a Coanda surface 687 at the upstream end 685a. The Coanda surface 687 is in fluid communication with the primary fluid outlet 675 when the attachment is inserted in the hairdryer 670 (Figures 16j and 16k) and causes primary fluid to hug the Coanda surface 687 when the primary fluid flow exits the primary fluid outlet 675 into the nozzle fluid flow path 688 and to a nozzle outlet 689. The downstream end 685b of the attachment 685 is provided with an upstanding lip 690 which protrudes from the downstream end 670b of the hairdryer and covers the downstream end 670b of the hairdryer. The nozzle outlet 689 is circular and has a smaller diameter than the hairdryer outlet 679.

Referring now to Figures 16c to 16g, a second attachment 850 is provided. This second attachment 850 is a hot styling nozzle and only provides an outlet for the primary flow from the hairdryer 670.

The second attachment 850 has a generally tubular body 851 which defines a longitudinal axis G-G of the attachment from a first or upstream end 850a to a second or downstream end 850b. At the upstream end 850a, an end wall 852 is provided which is designed to block the second fluid flow path 680 of the hairdryer 670. A fluid inlet 853 is provided in the body 851 downstream of the end wall 852 and fluid can flow from the fluid inlet 853 along a fluid flow path 854 to a fluid outlet 855 at the downstream end 850b of the nozzle. The nozzle 850 is designed to be partially insertable into hairdryer 670 such that the fluid inlet is in fluid communication with the primary fluid outlet 675.

The portion of the nozzle that is insertable is generally tubular and is provided with an upstanding lip of collar 856 around the body 850 which abuts the downstream end 670b of the hairdryer when the attachment 850 is inserted properly. Downstream of the lip 856, the change of the attachment changes from generally circular to generally rectangular to provide a focused flow from the nozzle outlet 855.

When there is no nozzle of the first type of nozzle 685 attached to the hairdryer 670, a primary fluid flow is augmented by an entrained flow through the second fluid flow path 680 and the total fluid output from the fluid outlet 679 is the combined value of the primary flow and the entrained flow. The second attachment 850 only allows primary flow from the hairdryer and blocks the entrained flow so, could suffer from a lower velocity of fluid output at the nozzle outlet 855. However, this is mitigated as the upstream end 855a of the nozzle 855 is designed to sit in the duct 678 of the hairdryer 670 so it does not restrict flow from the primary outlet 675. The upstream end of the nozzle body 851 has a curved wall 857 so turbulence and pressure losses as a result of the use of the second attachment 850 are minimised. This second nozzle 850 has the effect of opening up the amp gap or the primary fluid outlet 675.

The lip or collar 856, 690 has the effect of not only informing the user that the nozzle or attachment 850, 685 has been correctly inserted into the hairdryer outlet 679 but also provides a seal against fluid from the primary fluid outlet 675 exiting external to the nozzle or attachment 850, 685.

Figures 17a to 17c show a nozzle 900 attached to a conventional hairdryer 920. The hairdryer 920 has a body 922 and a handle 924. The body 922 includes a duct 923 that houses a fan unit 930 and a heater 940 and a fluid flow path 926 is provided from an inlet 928 located at the upstream end 920a of the hairdryer to an outlet 932 provided at a downstream end 920b of the hairdryer. In use, fluid is drawn through the fluid flow path 926 by the fan unit 930 from the inlet 928 to the outlet 932. When there is no attachment, the hairdryer outlet 932 is circular.

The nozzle 900 has an upstream end 900a which is inserted into duct 923 at the outlet 932 of the hairdryer 920 and a downstream end 900b which protrudes from the outlet 932 of the hairdryer 920. The nozzle 900 has a convex outer surface 910 which curves inwards to a rounded point or dome at the upstream end 900a of the nozzle and at the downstream end 900b of the nozzle. The convex outer surface 910 of the nozzle together with the hairdryer outlet 932 define an annular fluid outlet or aperture 950 of the hairdryer at the downstream end 920b of the hairdryer.

In the vicinity of the outlet 950, the convex outer wall 910 curves outwards and increases in diameter causing a reduction in the cross section of the fluid flow path at the outlet 950. The convex outer wall 910 continues beyond the outlet 950 and the downstream end 920b of the hairdryer to a downstream nozzle end 900b. The convex outer wall 910 is a Coanda surface i.e. it causes fluid that flows through the fluid flow path 926 to hug the surface of the outer wall 910 as it curves forming an annular flow at the outlet 950 and downstream nozzle end 900b. In addition the Coanda surface 910 is arranged so a fluid flow exiting the outlet 950 is amplified by the Coanda effect.

The hairdryer achieves the output and cooling effect described above with a nozzle which includes a Coanda surface to provide an amplifying region utilising the Coanda effect.

By encouraging the fluid at the outlet 950 to flow along the curved surface 910 of the outer wall to the downstream nozzle end 900b, fluid is entrained 918 from outside the hairdryer 920 (Figures 17b and 17c) by the Coanda effect. This action of entrainment increases the flow of air at the downstream nozzle end 900b, thus the volume of fluid flowing at the downstream nozzle end 900b is magnified by the entrainment above what is processed by the hairdryer 920 through a fan unit 930 and heater 940.

The entrainment provides an advantage as it results in the production of an annular ring of hot fluid which is surrounded by and the outer edges are partially cooled by the entrained cool fluid.

The nozzle 900 is retained within the hairdryer outlet 932 by one of a number of methods such as providing a ring around the outer surface and attached thereto by a number of radially spaced struts, the ring engaging with the duct 922 when the nozzle 900 is partially inserted in the hairdryer outlet 932. An alternative retention method is to use a central strut to support the nozzle.

Figures 18a to 28e show an alternate nozzle 960 attached to a conventional hairdryer 920. Features that have already been described with respect to Figures 1a and 1b are provided with the same reference numerals.

The nozzle 960 is provided with a collar 980 which surrounds the outer surface 970. The internal surface 982 of the collar 980 and the outer surface 970 of the nozzle together define an entrained fluid flow path 984 through which fluid 978 that has been entrained from outside the hairdryer 920 by the action of the fan unit 930 drawing a fluid flow through the hairdryer to the annular outlet 990 formed by the convex outer surface 970 of the nozzle and the hairdryer outlet 932 can flow.

The collar 980 has two portions, an upstream portion 986 which flares outwards and away from the body 922 of the hairdryer and a downstream portion 988 which is generally constant in diameter and follows the line of the convex outer surface 970 of the nozzle 960. The flared end 986 is to increase the entrainment effect and the volume of fluid that flows through the entrained fluid flow path 984. The downstream end 988 focuses the flow towards the Coanda surface namely the outer surface 970 of the nozzle to provide a focused ring of fluid output from the end of the nozzle.

The entrained fluid 978 and fluid flow from the hairdryer fluid flow path 926 mix and combine at the downstream end 920b of the hairdryer and within the collar 980. The collar 980 additionally provides a finger guard to prevent a person from touching the outlet 932 directly and the entrained flow 978 cools the surface of the collar 980 preventing the collar 980 getting hot.

The nozzle is retained with respect to the hairdryer by one of a number of alternatives which include but are not limited to a felt seal, a bump stop, an o-ring, magnets, friction fit, a mechanical clip, snap fit or actuated snap fit.

The hairdryers are preferably provided with a filter 222 (Figures 2b, 2c and 18b) which covers at least the primary fluid flow inlet 220 of the hairdryer. The filter 222 is provided as is prevents ingress of dust, debris and hair into the primary fluid flow path upstream 260 of the fan unit 250 which includes a fan and a motor. These foreign objects could damage the motor and cause premature failure of the hairdryer. The filter 222 can cover the entire intake of the hairdryer i.e. both the primary fluid flow path 260 and the second fluid flow path 280 however this is not preferred as it interferes with a line of sight through the appliance. A line of sight through the appliance is restricted by the use of a nozzle on the appliance.

The invention has been described in detail with respect to a nozzle for a hairdryer and a hairdryer comprising a nozzle however, it is applicable to any appliance that draws in a fluid and directs the outflow of that fluid from the appliance.

The appliance can be used with or without a heater; the action of the outflow of fluid at high velocity has a drying effect.

The fluid that flows through the appliance is generally air, but may be a different combination of gases or gas and can include additives to improve performance of the appliance or the impact the appliance has on an object the output is directed at for example, hair and the styling of that hair.

The invention is not limited to the detailed description given above. Variations will be apparent to the person skilled in the art.

CLAIMS

1. A hairdryer comprising a handle; a body comprising a duct; a fluid flow path extending through the duct and from a fluid inlet through which a fluid flow enters the hairdryer to a fluid outlet for emitting the fluid flow from a front end of the body; a primary fluid flow path extending at least partially through the body from a primary fluid inlet through which a primary fluid flow enters the hairdryer to a primary fluid outlet; a fan unit for drawing the primary fluid flow through the primary fluid inlet, and wherein the fluid flow is drawn through the fluid flow path by fluid emitted from the primary fluid outlet, and an attachment for adjusting at least one parameter of fluid emitted from the hairdryer, the attachment being attachable to the hairdryer so that the attachment protrudes from the front end of the body.

2. A hairdryer according to claim 1, wherein the attachment is attached to the hairdryer through insertion of part of the attachment into the duct through the fluid outlet.

3. A hairdryer according to claim 1 or claim 2, wherein said part of the attachment is slidably insertable into the duct through the fluid outlet.

4. A hairdryer according to claim 2 or claim 3, wherein the attachment is retained within the duct by means of friction between the attachment and the duct.

5. A hairdryer according to any preceding claim, wherein the attachment is in the form of a nozzle defining a nozzle fluid flow path extending from a nozzle fluid inlet through which the primary fluid flow enters the nozzle to a nozzle fluid outlet for emitting the primary fluid flow.

6. A hairdryer according to claim 5, wherein the nozzle comprises a first end which is insertable into the duct, and a second end remote from the first end, and wherein the nozzle fluid inlet is located between the first end and the second end of the nozzle.

7 A hairdryer according to claim 6, wherein the nozzle fluid inlet comprises at least one aperture extending at least partially about the longitudinal axis of the nozzle.

8. A hairdryer according to claim 6 or claim 7, wherein the nozzle fluid inlet comprises a plurality of apertures extending circumferentially about the longitudinal axis of the nozzle.

9. A hairdryer according to claim 7 or claim 8, wherein the at least one aperture has a length extending in the direction of the longitudinal axis of the nozzle, and wherein the length of said at least one aperture varies about the longitudinal axis of the nozzle.

10. A hairdryer according to any of claims 5 to 9, wherein the primary fluid outlet is configured to emit the primary fluid flow into the duct, and part of the nozzle is insertable into the duct through the fluid outlet to receive the primary fluid flow from the primary fluid outlet.

11. A hairdryer according to any of claims 6 to 10, wherein the nozzle comprises a side wall between the first end and the second end, and wherein a portion of the side wall which is located between the first end and the second end of the nozzle at least partially defines the nozzle fluid inlet.

12. A hairdryer according to claim 11, wherein the side wall is tubular in shape.

13. A hairdryer according to claim 11 or claim 12, wherein the nozzle fluid inlet is formed in the side wall.

14. A hairdryer according to any of claims 11 to 13, wherein the nozzle fluid inlet forms part of the primary fluid outlet.

15. A hairdryer according to claim 11 or claim 12, wherein the side wall extends about an inner wall, and wherein the nozzle fluid inlet is located between the inner wall and the side wall.

16. A hairdryer according to claim 15, wherein the inner wall is tubular in shape.

17. A hairdryer according to claim 11 or claim 12, wherein the side wall extends from the first end to the second end, and the nozzle comprises an outer wall extending at least partially about the side wall, and wherein the nozzle fluid inlet is located between the outer wall and the side wall.

18. A hairdryer according to claim 17, wherein the outer wall is tubular in shape.

19. A hairdryer according to any of claims 14 to 18, wherein the nozzle fluid outlet is located between the walls.

20. A hairdryer according to any of claims 5 to 19, wherein the nozzle comprises a further nozzle fluid inlet through which the fluid flow enters the nozzle.

21. A hairdryer according to claim 20, wherein the fluid flow and the primary fluid flow combine within the nozzle fluid flow path to form a combined fluid flow which is emitted from the nozzle fluid outlet.

22. A hairdryer according to claim 20 or claim 21, wherein the nozzle comprises means for closing the further nozzle fluid inlet depending on the extent to which the nozzle has been inserted within the duct.

23. A hairdryer according to claim 22, wherein the means for closing the further nozzle fluid inlet is configured to move from an open position to a closed position when the primary fluid flow enters the nozzle.

24. A hairdryer according to claim 20, wherein the nozzle comprises a further nozzle fluid outlet for emitting the fluid flow, and wherein within the nozzle the primary fluid flow is isolated from the fluid flow.

25. A hairdryer according to claim 24, wherein one of the nozzle fluid outlet and the further nozzle fluid outlet extends about the other of the nozzle fluid outlet and the further nozzle fluid outlet.

26. A hairdryer according to claim 24, wherein the nozzle fluid outlet and the further nozzle fluid outlet are located on opposing sides of the nozzle.

27. A hairdryer according to any of claims 24 to 26, wherein the nozzle fluid outlet and the further nozzle fluid outlet are substantially coplanar.

28. A hairdryer according to any of claims 5 to 27, wherein the shape of the nozzle fluid outlet is adjustable.

29. A hairdryer according to any of claims 1 to 20, wherein the attachment is configured to inhibit the emission of the fluid flow from the hairdryer.

30. A hairdryer according to any of claims 1 to 20, wherein the attachment is configured to inhibit the generation of the fluid flow.

31. A hairdryer according to claim 29 or claim 30, wherein the attachment comprises means for inhibiting the flow of fluid along the fluid flow path to the fluid outlet.

32. A hairdryer according to claim 31, wherein the means for inhibiting the flow of fluid along the flow path to the fluid outlet comprises a barrier which is located within the duct when the attachment is attached to the hairdryer.

33. A hairdryer according to claim 32 when dependent from claim 10, wherein the barrier is located at the first end of the nozzle.

34. A hairdryer according to claim 32 or claim 33, wherein the barrier is substantially orthogonal to the longitudinal axis of the nozzle.

35. A hairdryer according to claim 32 or claim 33, wherein the barrier is inclined to the longitudinal axis of the nozzle.

36. A hairdryer according to any preceding claim, wherein said at least one parameter of the fluid flow emitted from the hairdryer comprises at least one of the shape, profile, orientation, direction, flow rate and velocity of the fluid flow emitted from the hairdryer.

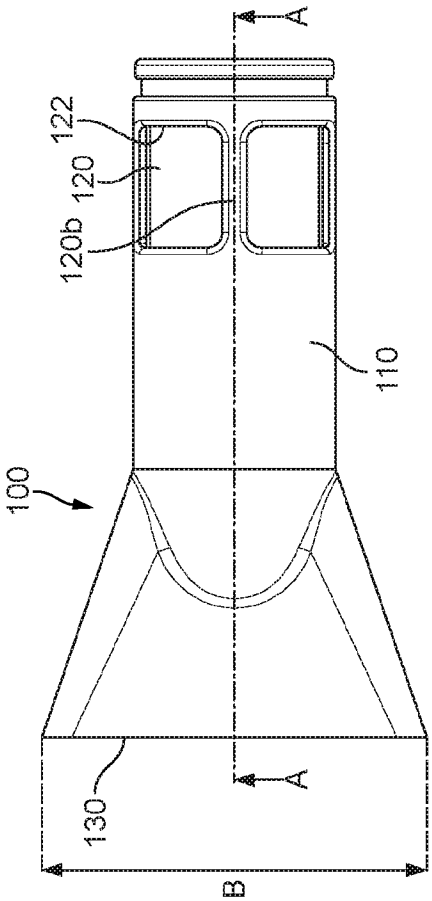

FIG. 1b

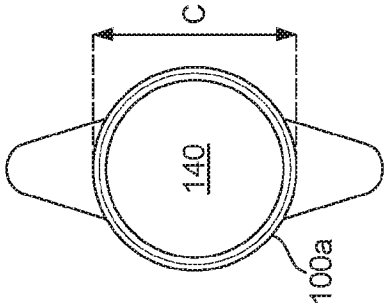

FIG. 1e

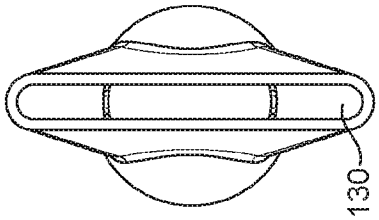

FIG. 1d

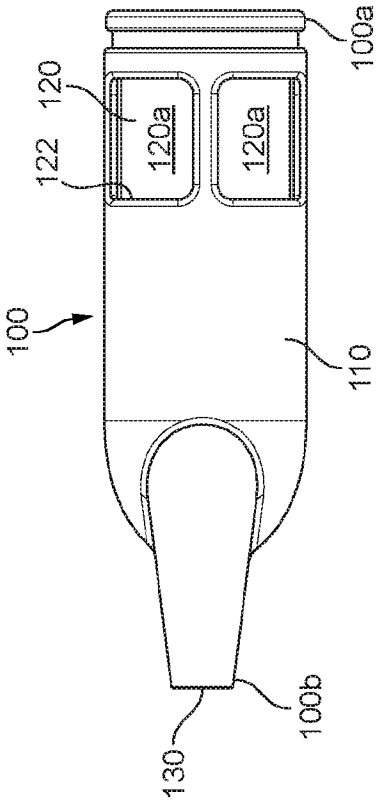

FIG. 1a

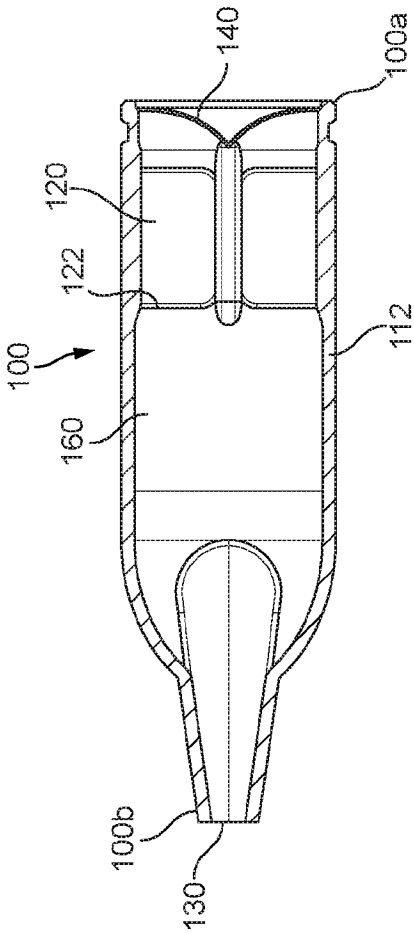

FIG. 1c

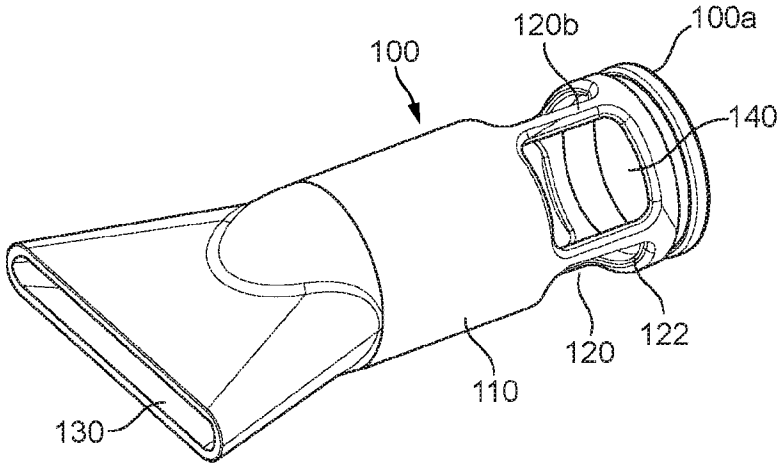

FIG. 1f

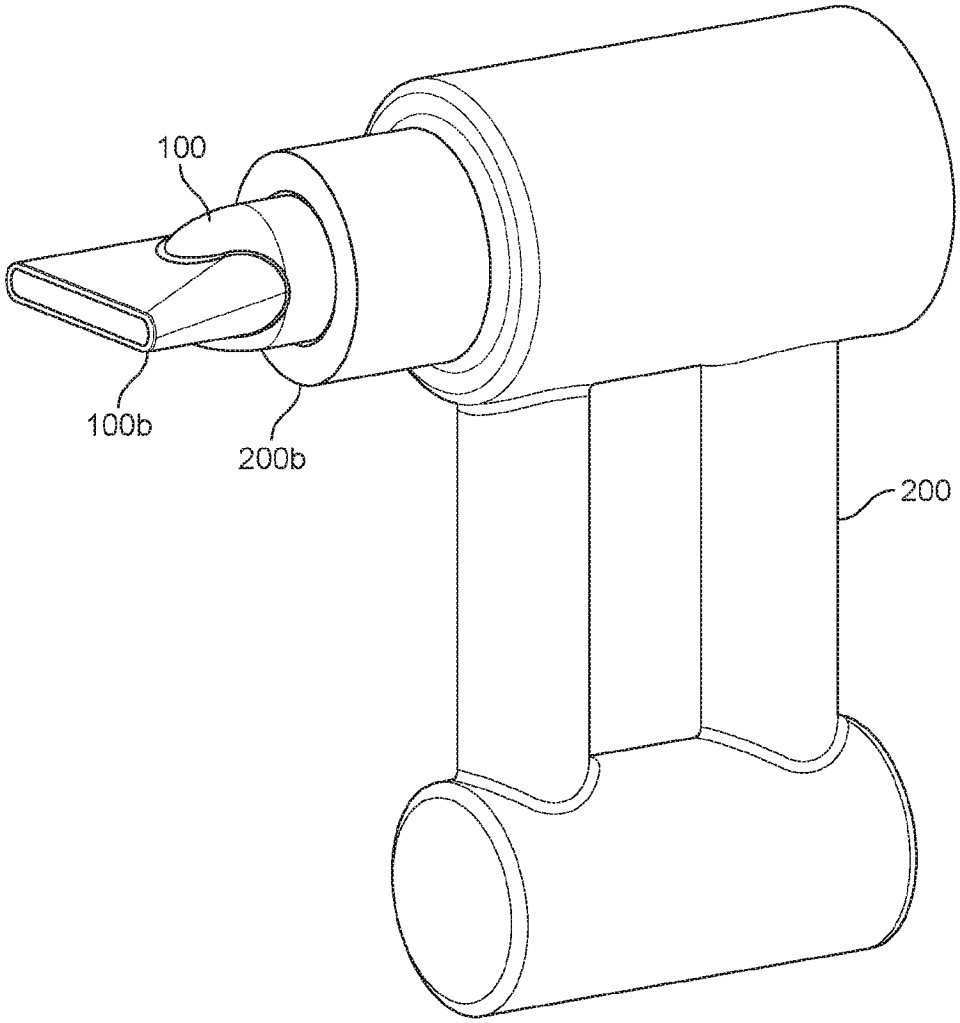

FIG. 2a

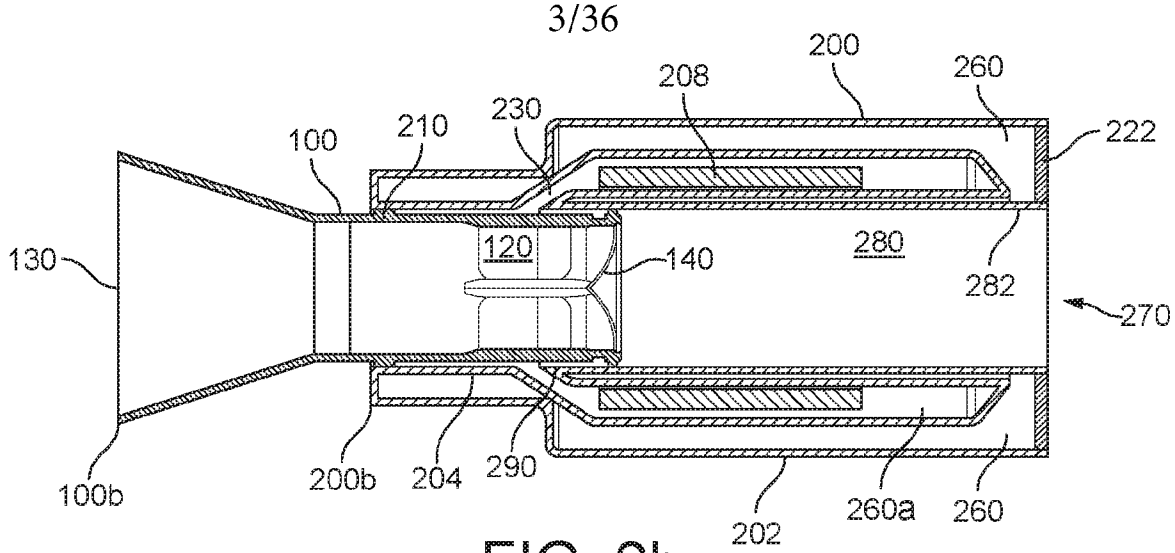
200
260
208
222
230
210
100
130
120
140
280
282
270
100b
200b
204
290
202
260a
260

FIG. 2b

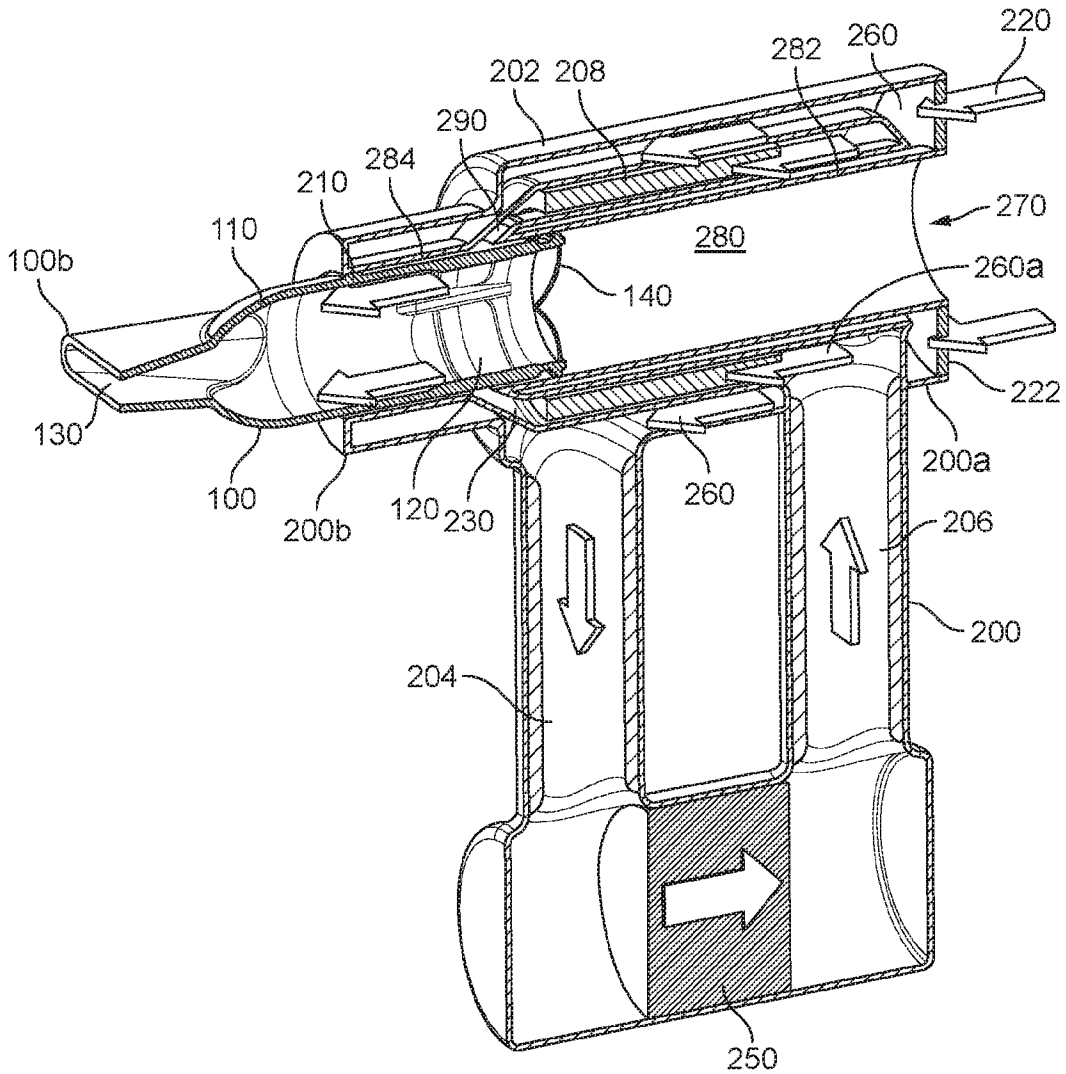
220
260
282
202
208
290
284
210
270
110
280
100b
260a
140
222
130
200a
100
200b
120
230
260
206
200
204
250

FIG. 2c

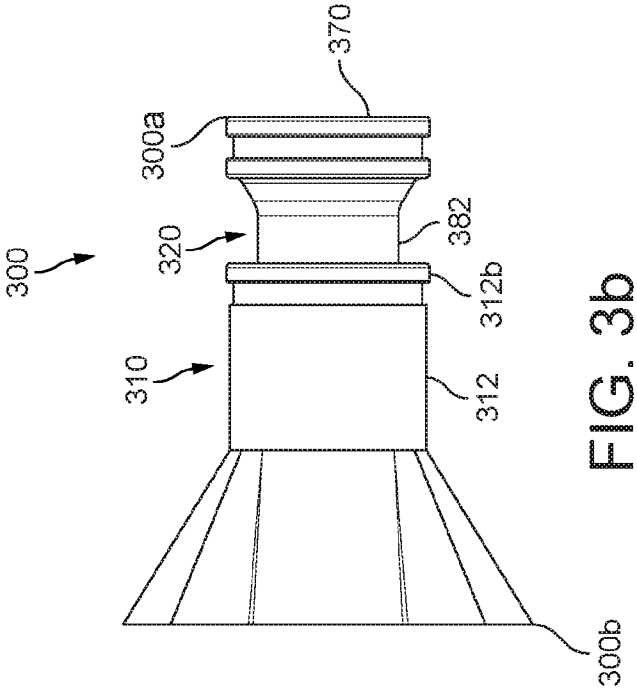

FIG. 3b

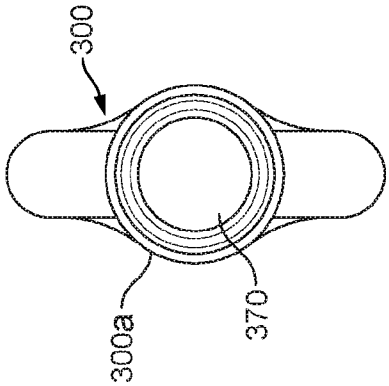

FIG. 3e

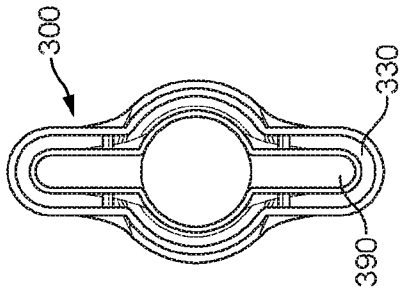

FIG. 3d

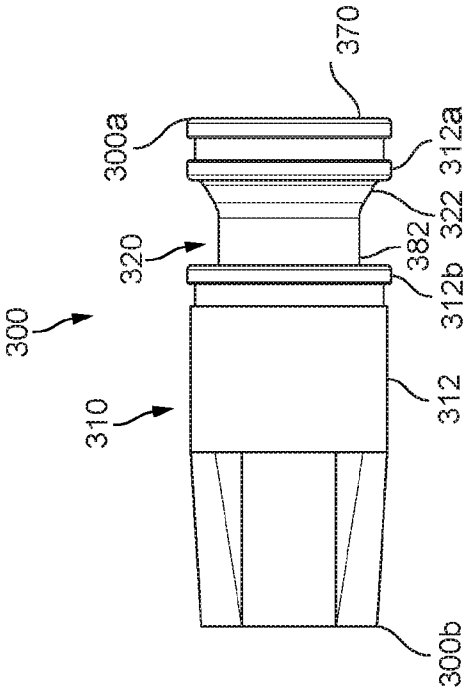

FIG. 3a

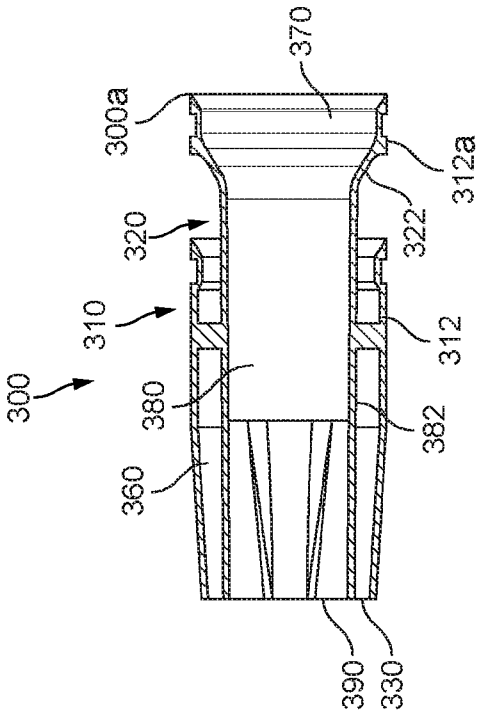

FIG. 3c

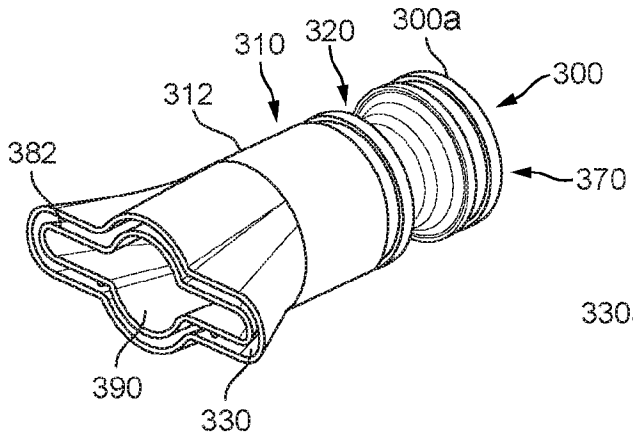

FIG. 3f

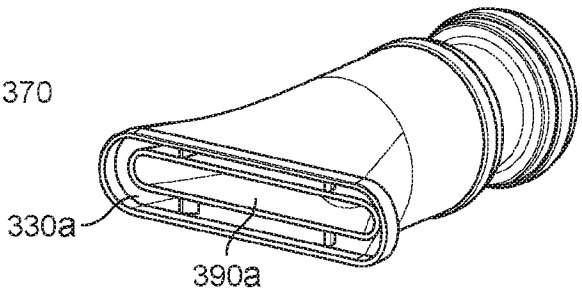

FIG. 3g

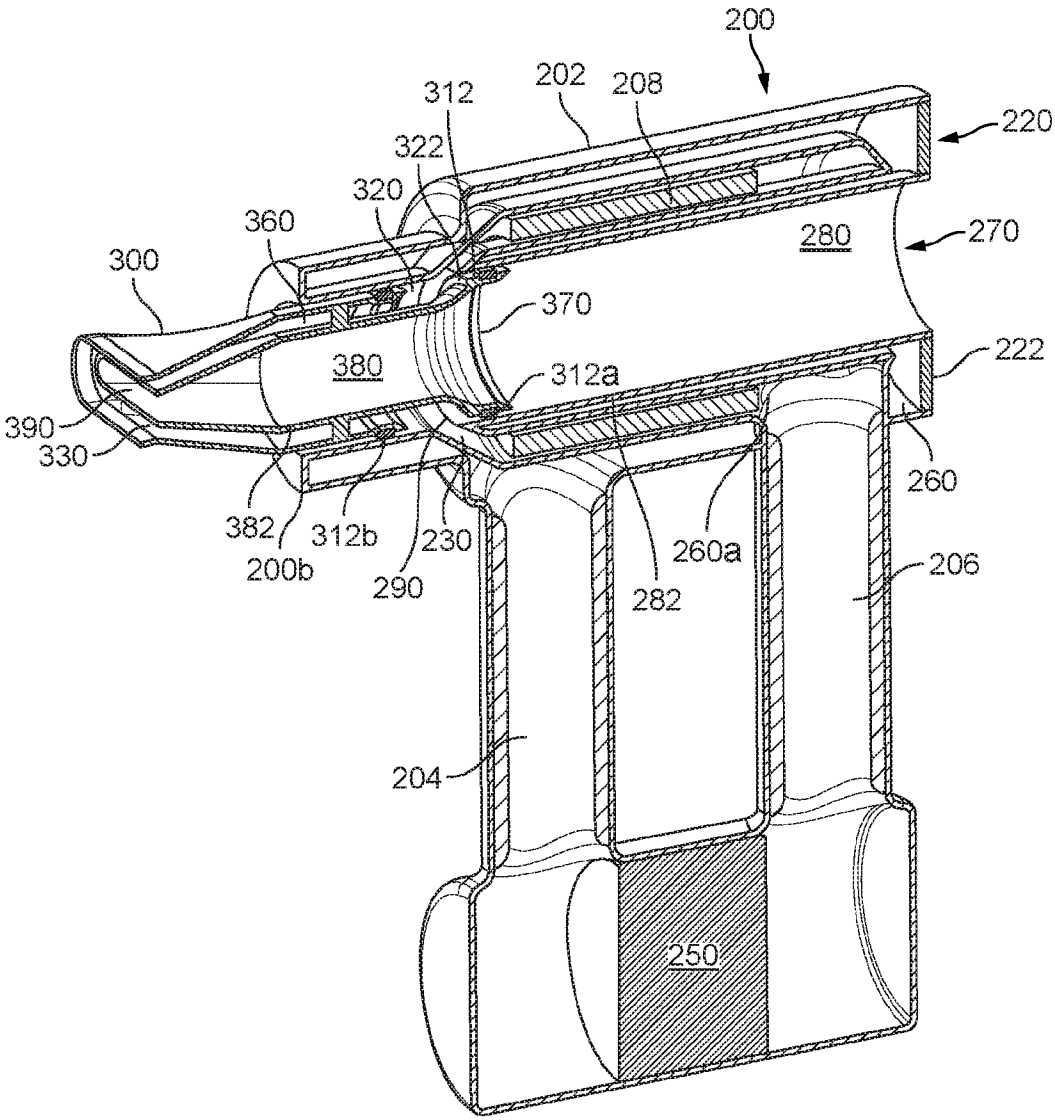

FIG. 4a

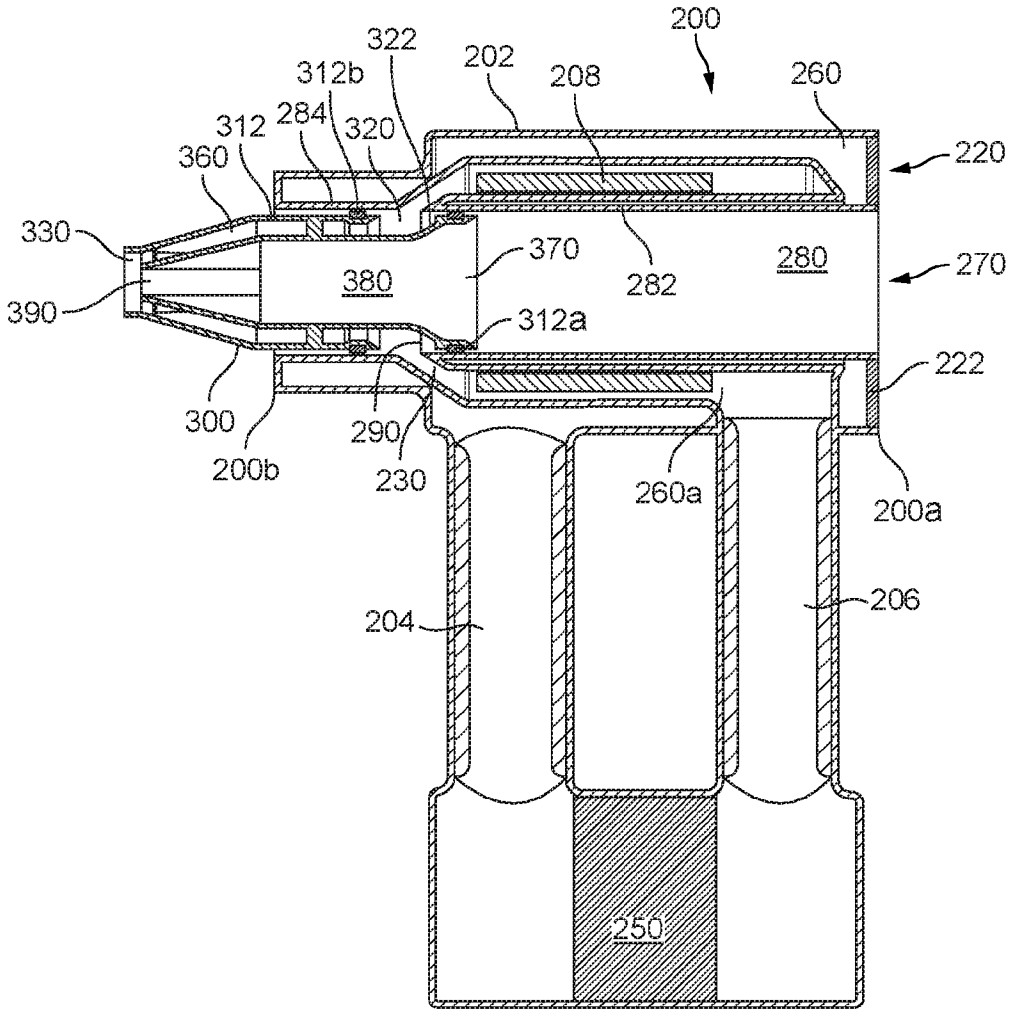
200
322
202
208
260
312b
284
320
312
360
220
330
370
280
270
380
282
390
312a
222
300
290
200b
230
260a
200a
204
206
250

FIG. 4b

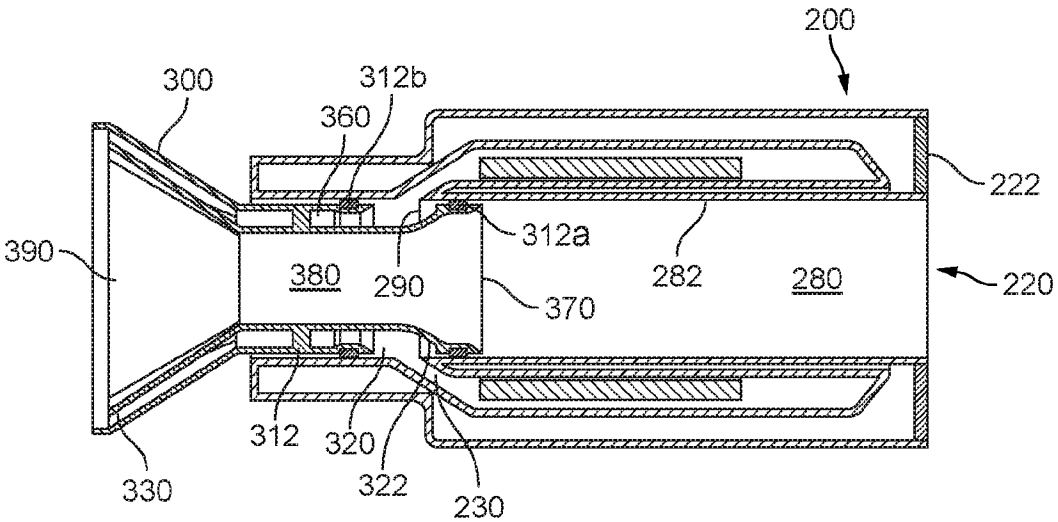
200
300
312b
360
222
312a
390
380
290
282
280
220
370
312
320
322
230
330

FIG. 4c

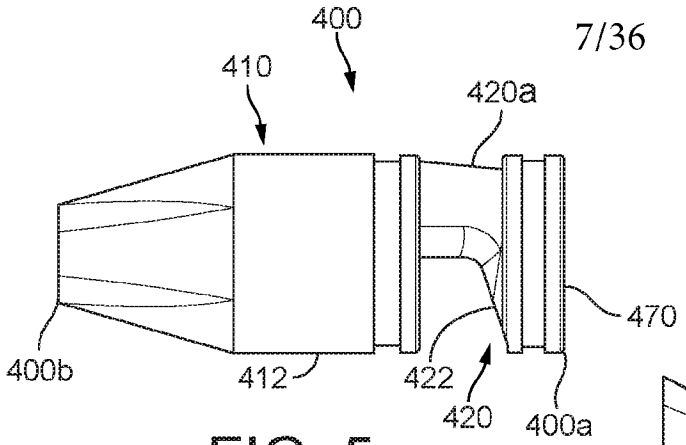

FIG. 5a

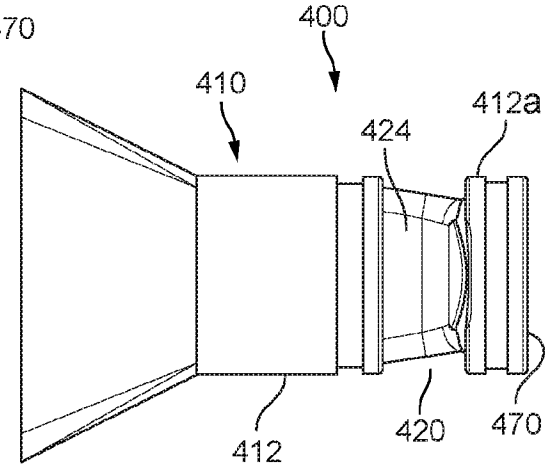

FIG. 5b

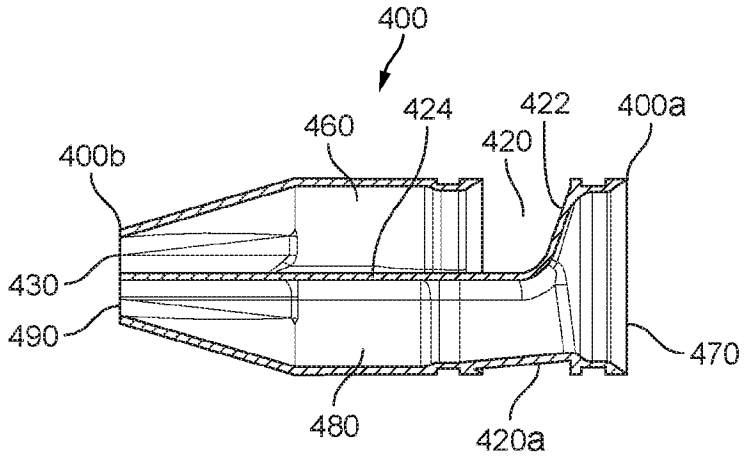

FIG. 5c

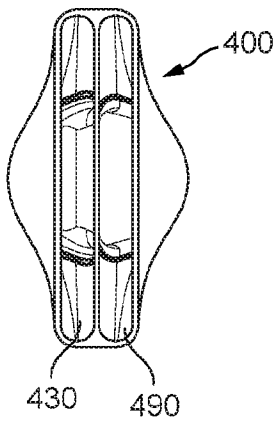

FIG. 5d

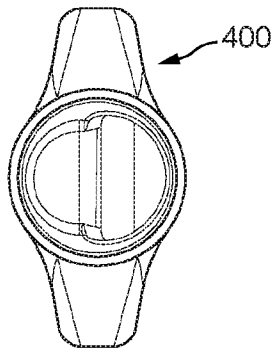

FIG. 5e

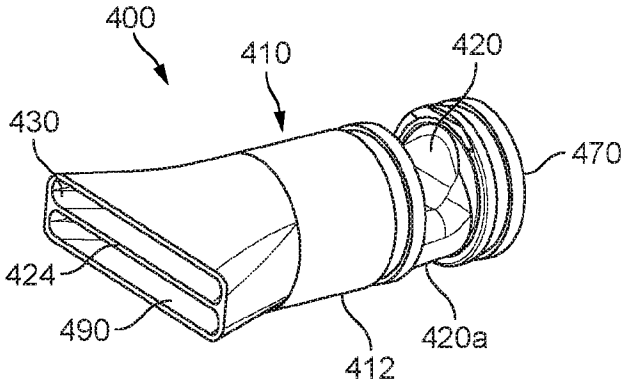

FIG. 5f

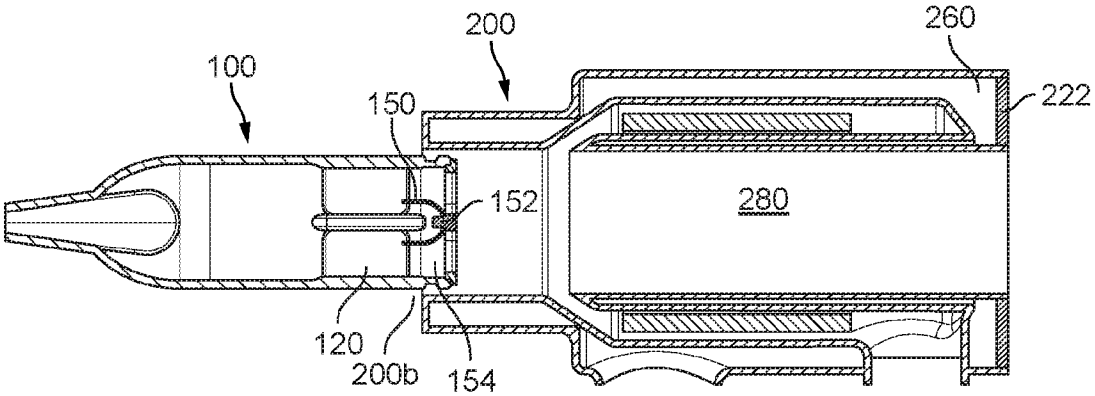

FIG. 6a

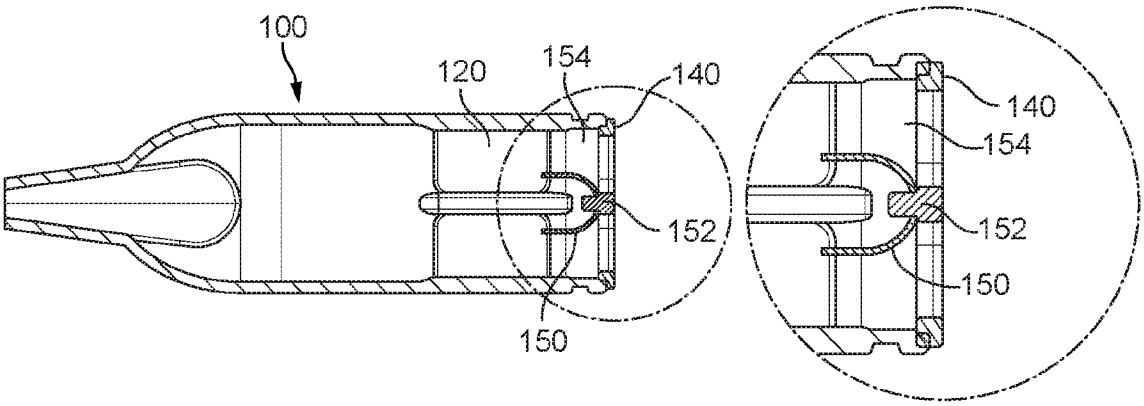

FIG. 6b

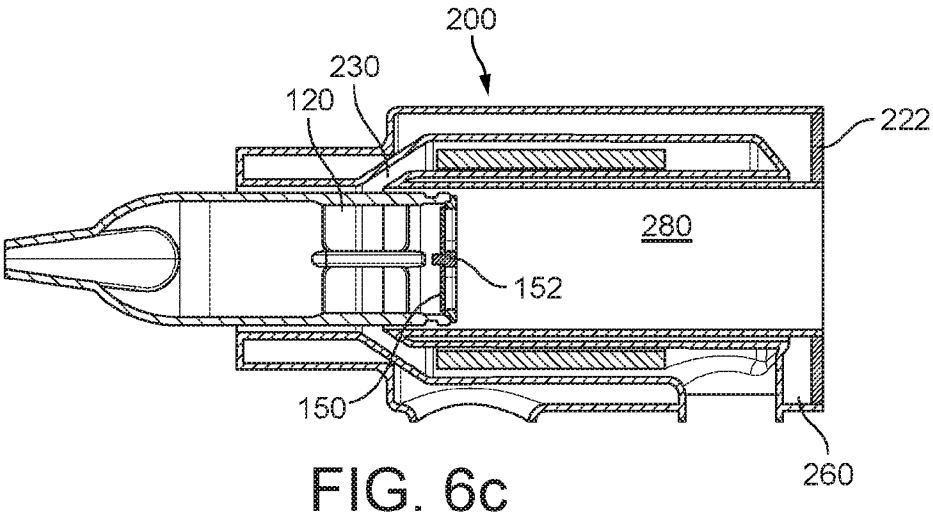

FIG. 6c

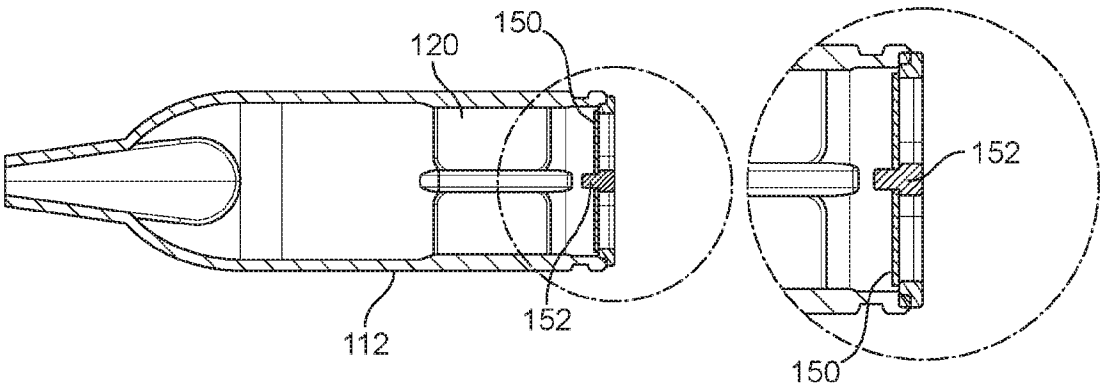

FIG. 6d

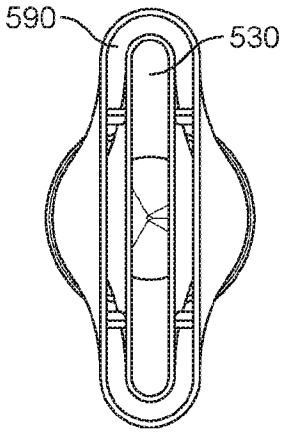

FIG. 7a

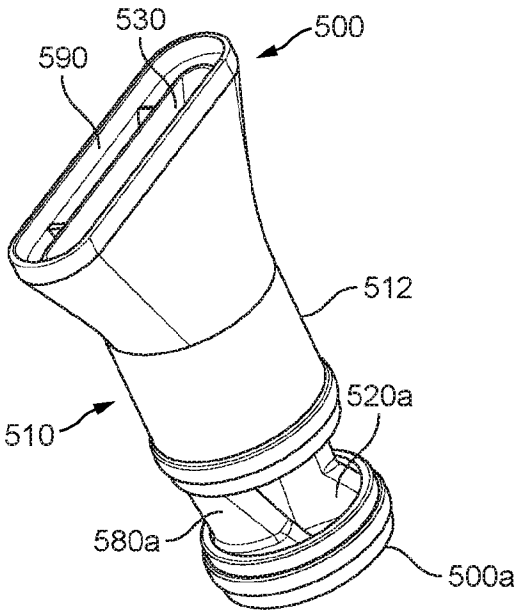

FIG. 7b

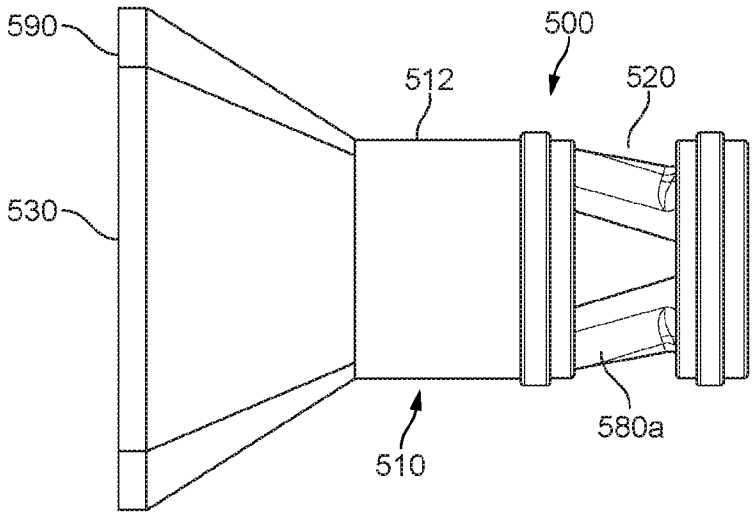

FIG. 7c

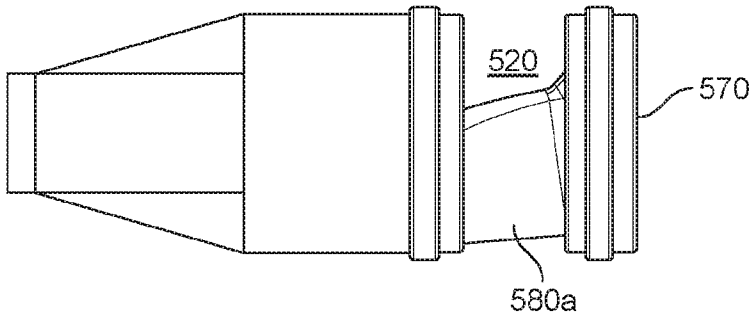

FIG. 7d

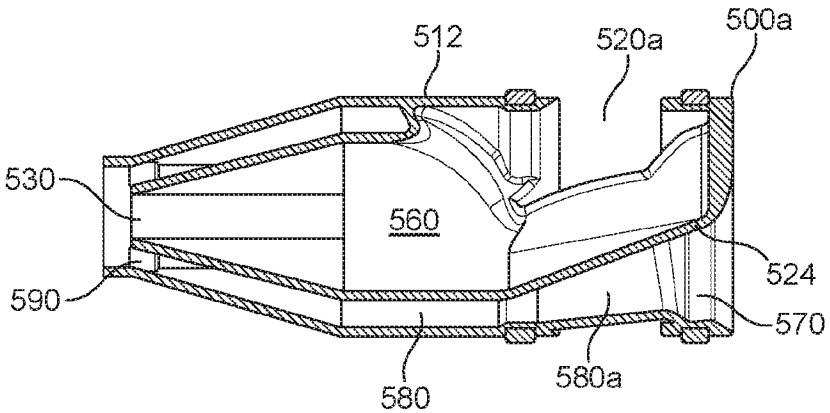

FIG. 7e

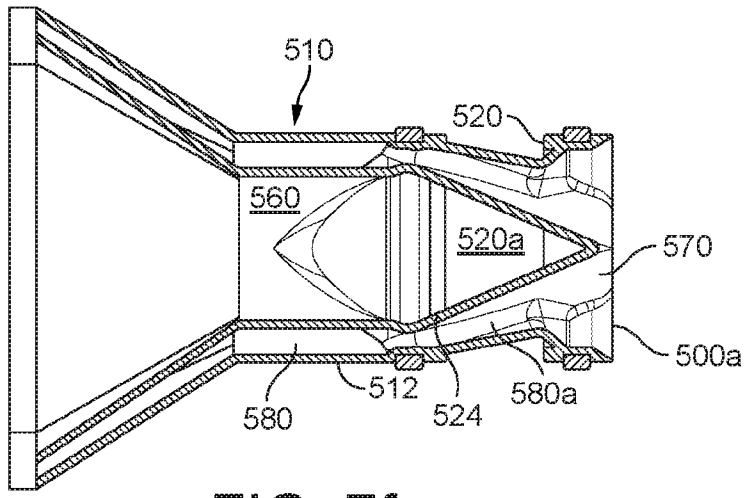
510
520
560
520a
570
500a
512
524
580a
580

FIG. 7f

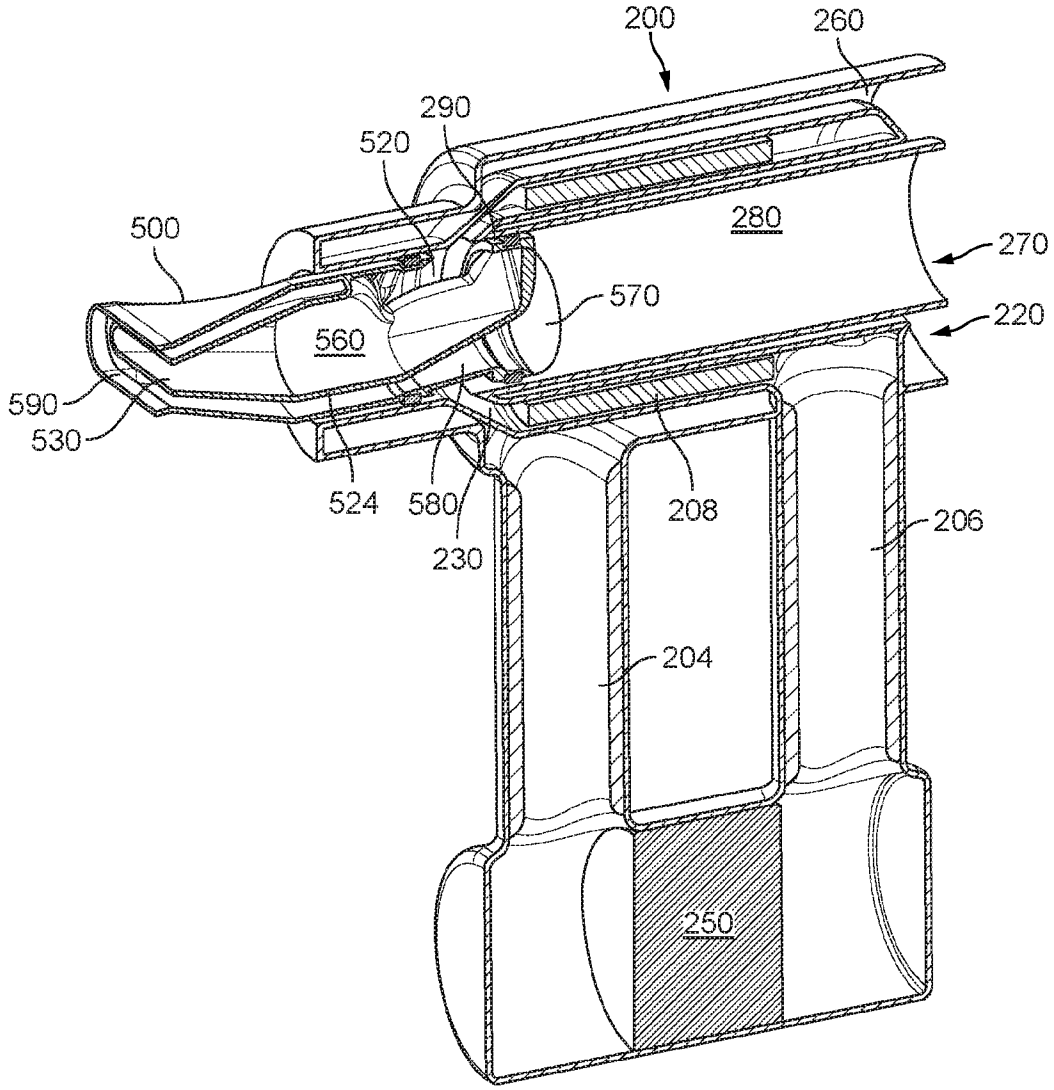
200
260
290
520
280
270
500
570
220
560
590
530
524
580
230
208
206
204
250

FIG. 7g

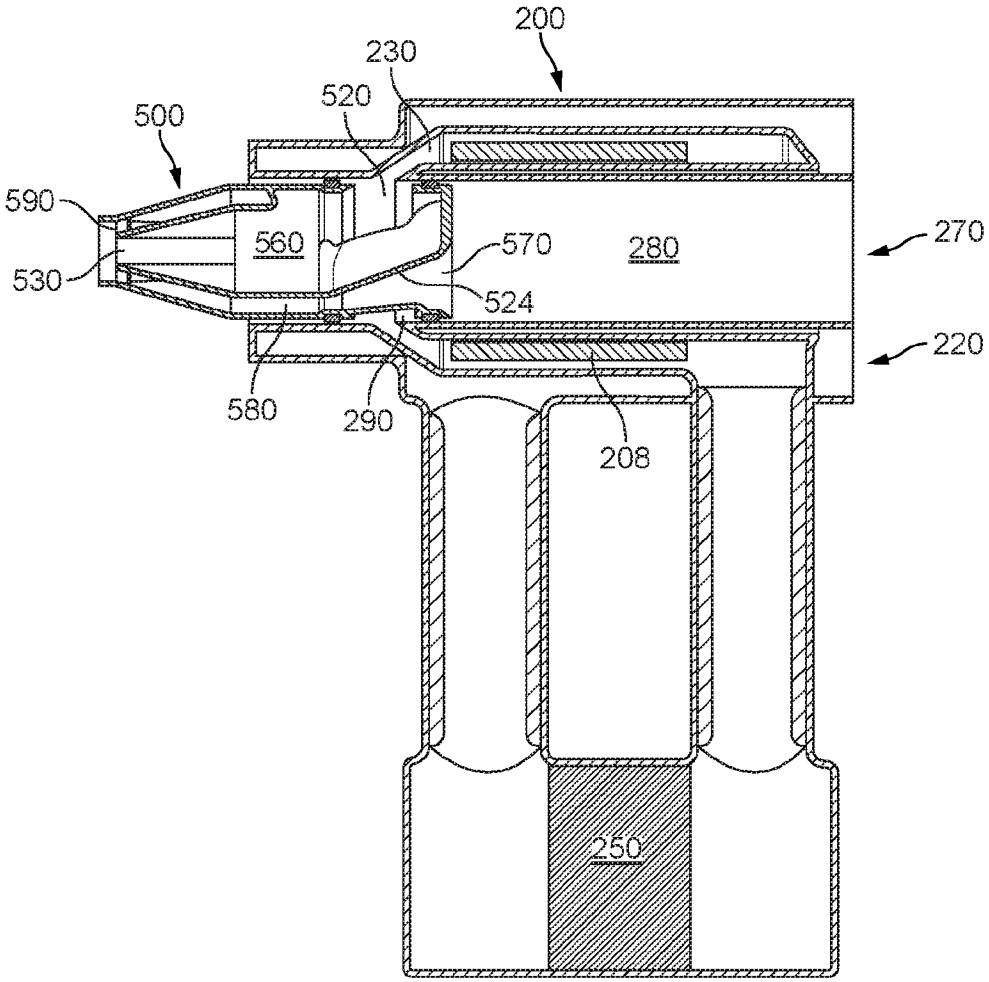
200
230
520
500
590
560
570
280
270
530
524
220
580
290
208
250

FIG. 7h

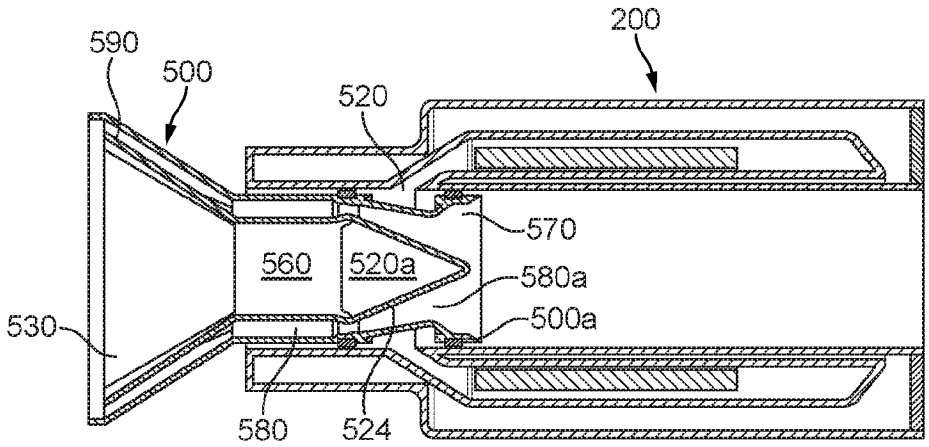
200
590
500
520
570
560
520a
580a
530
500a
580
524

FIG. 7i

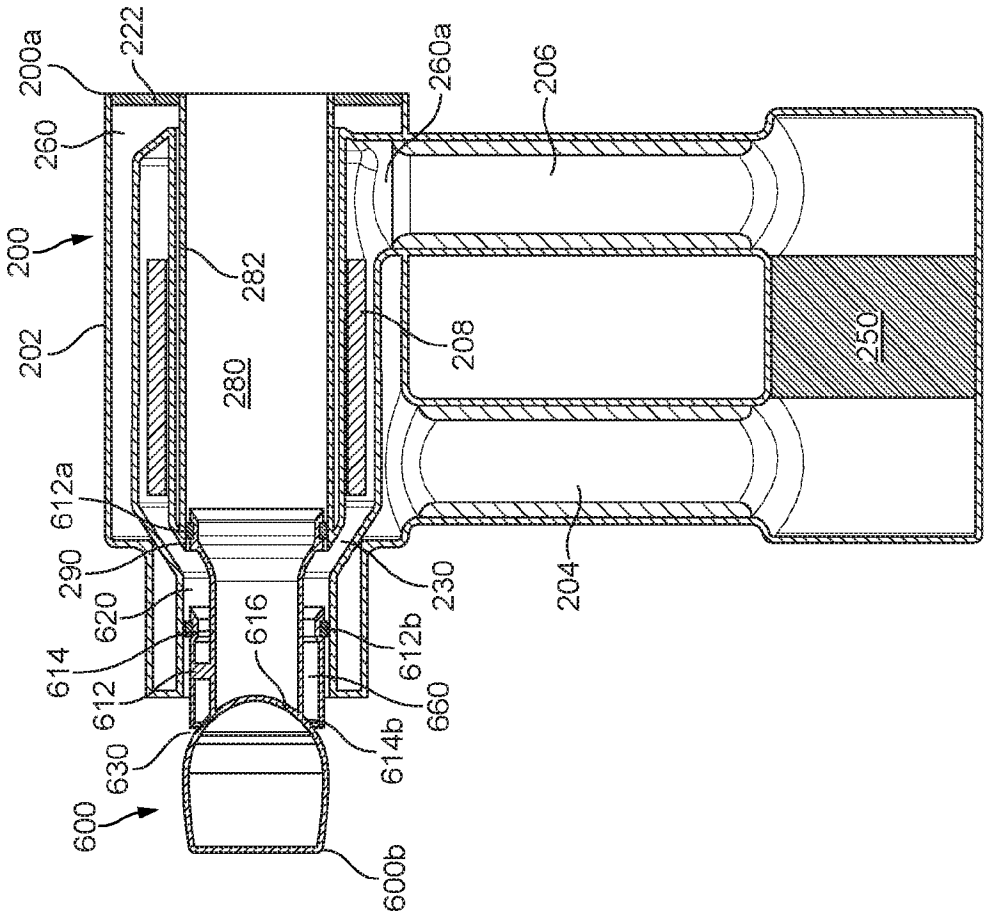
200a
222
260
200
202
282
280
260a
206
208
250
204
230
612a
290
620
614
612
616
612b
660
614b
630
600
600b

FIG. 8a

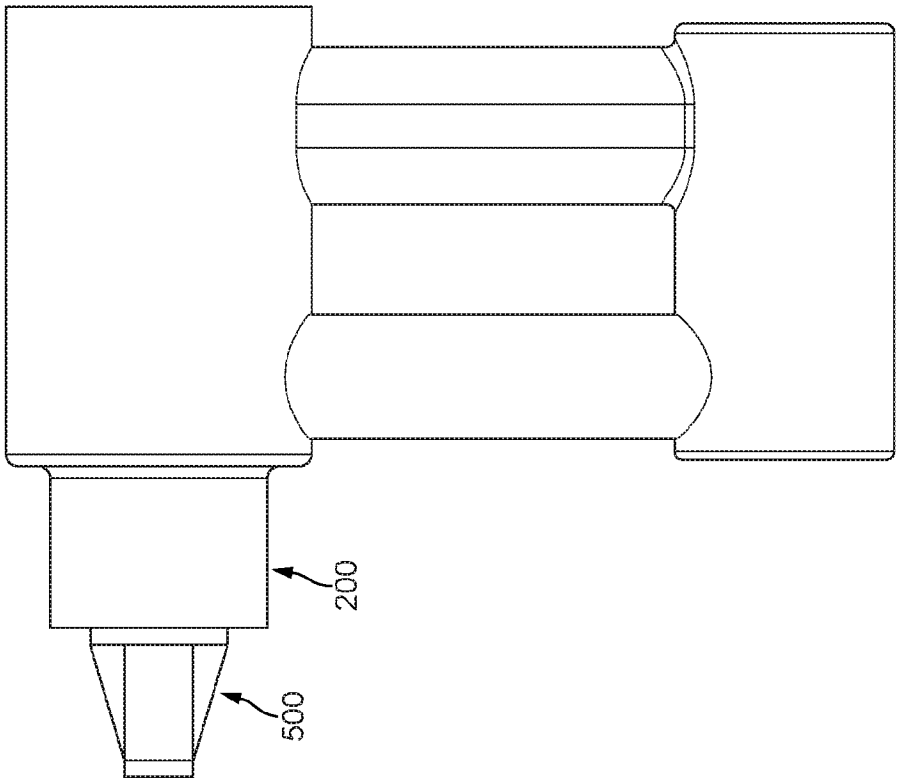
200
500

FIG. 7j

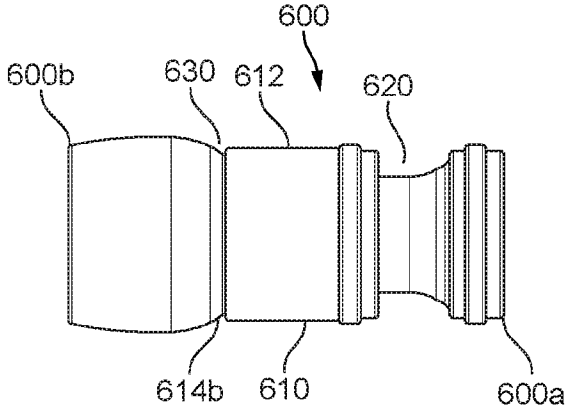

FIG. 8b

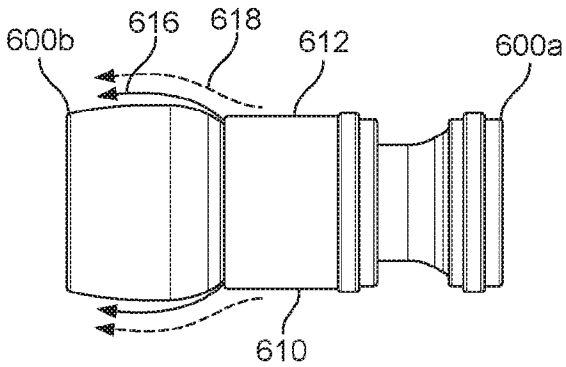

FIG. 8c

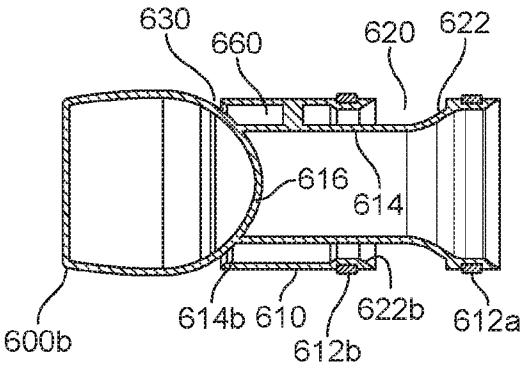

FIG. 8d

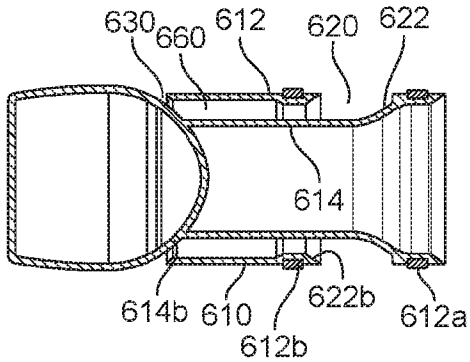

FIG. 8e

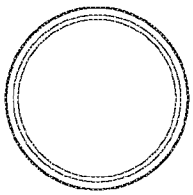

FIG. 8f

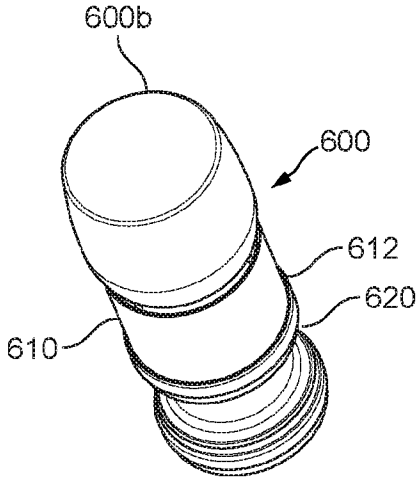

FIG. 8g

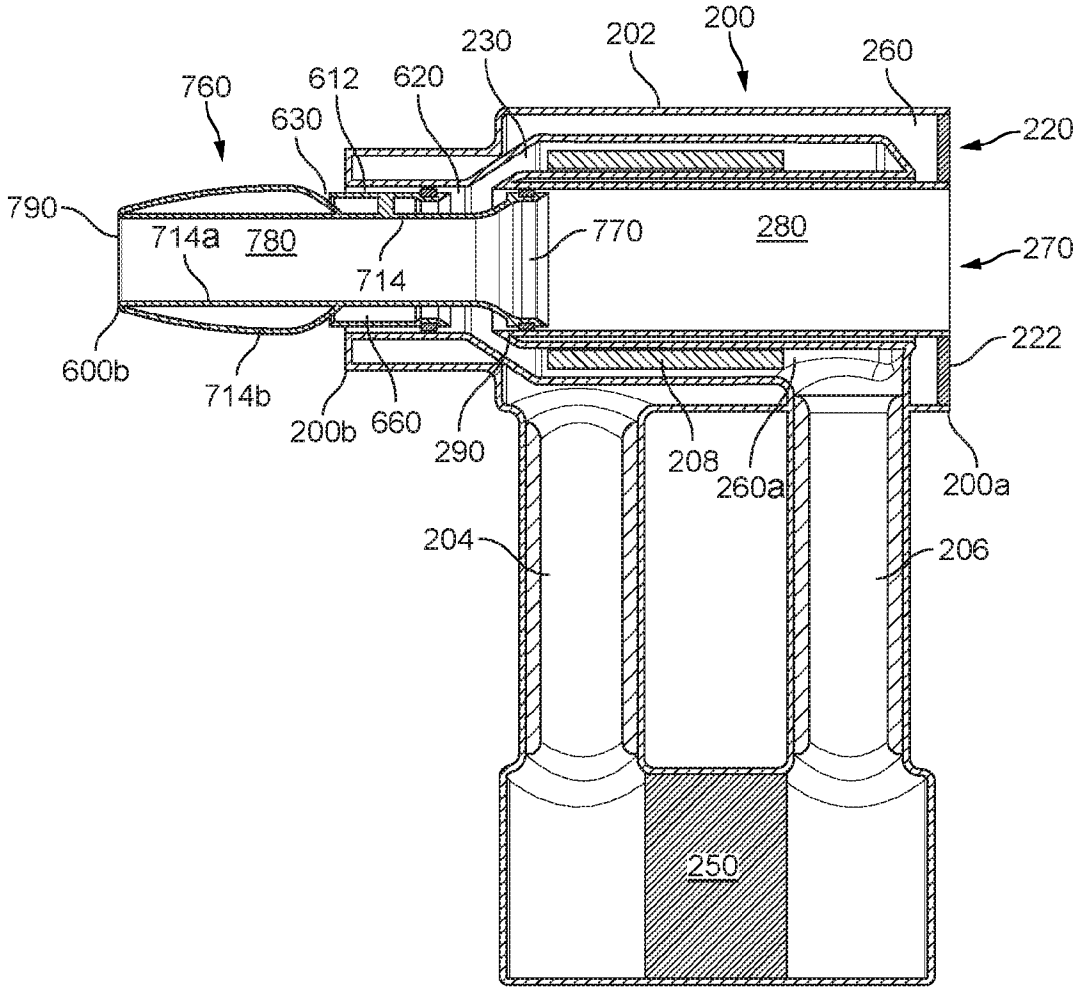
200
202
230
260
760
612
620
630
220
790
714a
780
770
280
270
714
222
600b
714b
200b
660
290
208
260a
200a
204
206
250

FIG. 9a

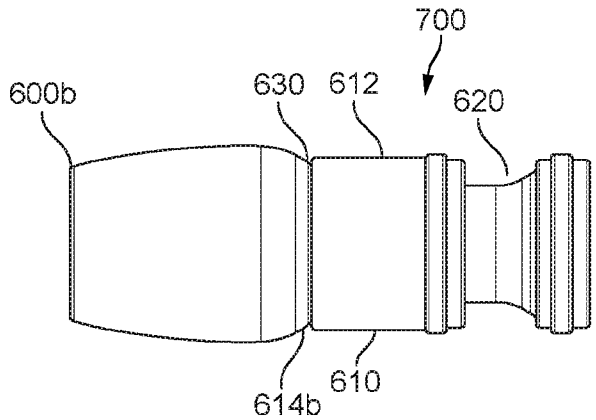
700
600b
630
612
620
614b
610

FIG. 9b

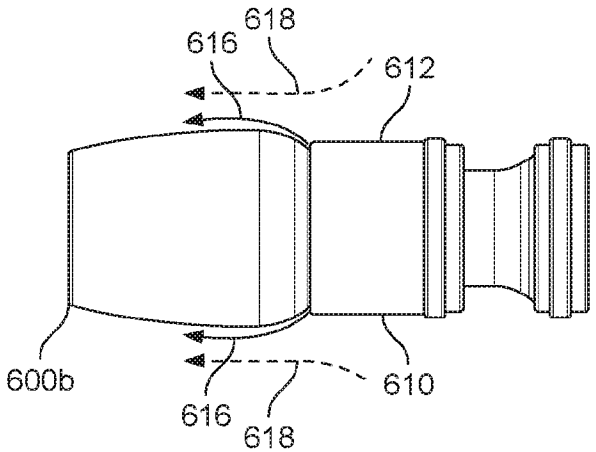

FIG. 9c

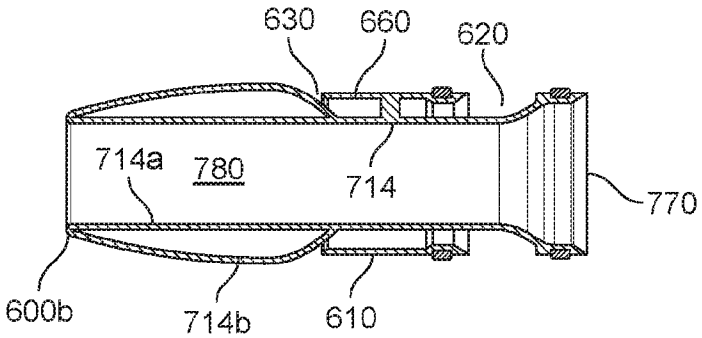

FIG. 9d

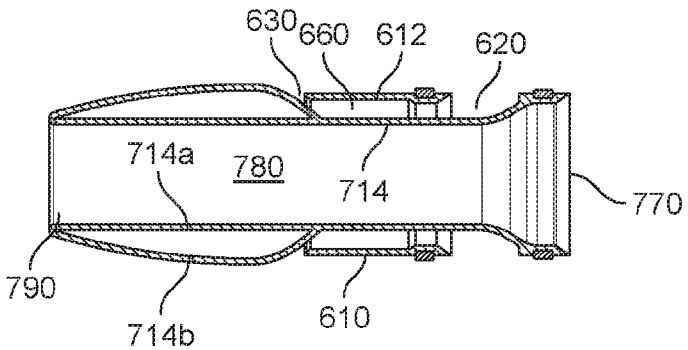

FIG. 9e

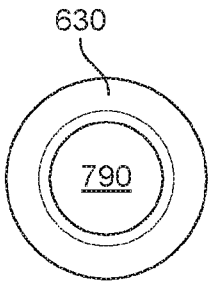

FIG. 9f

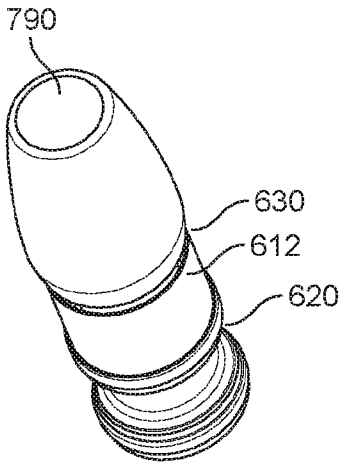

FIG. 9g

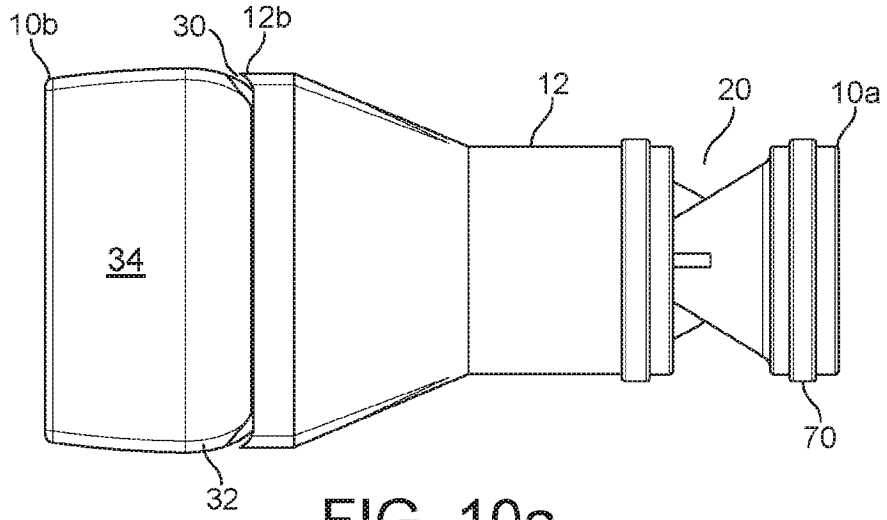

FIG. 10a

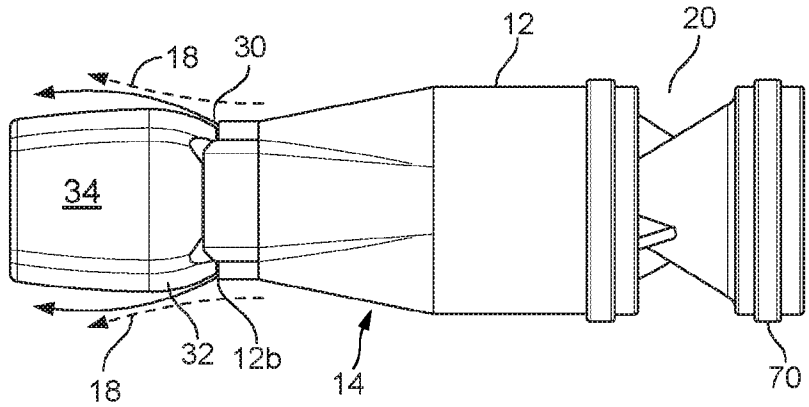

FIG. 10b

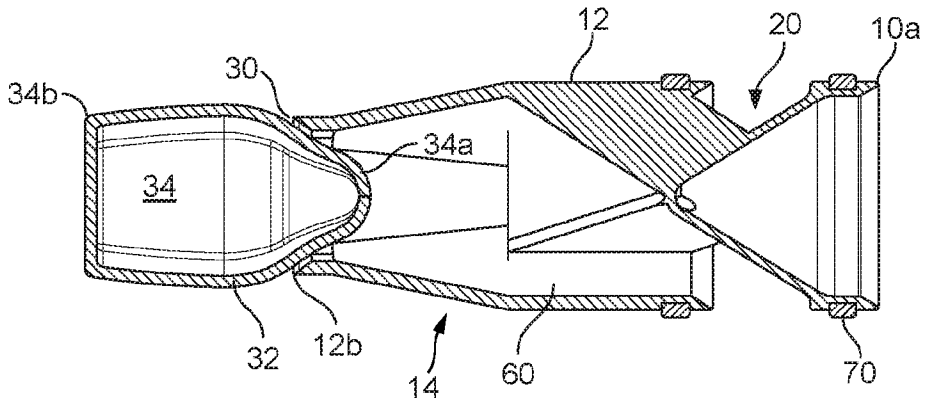

FIG. 10c

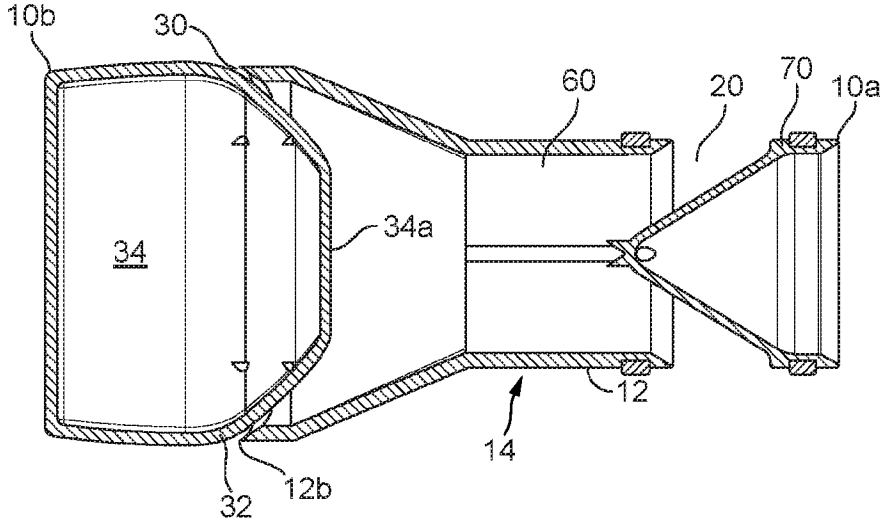

FIG. 10d

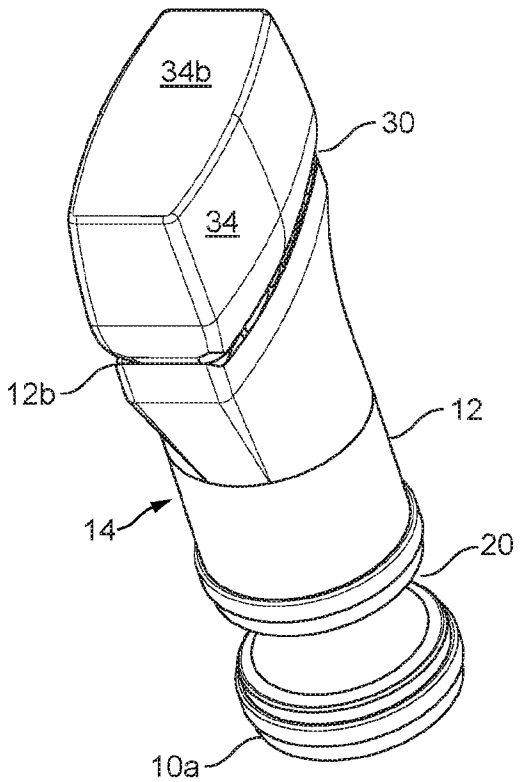

FIG. 10e

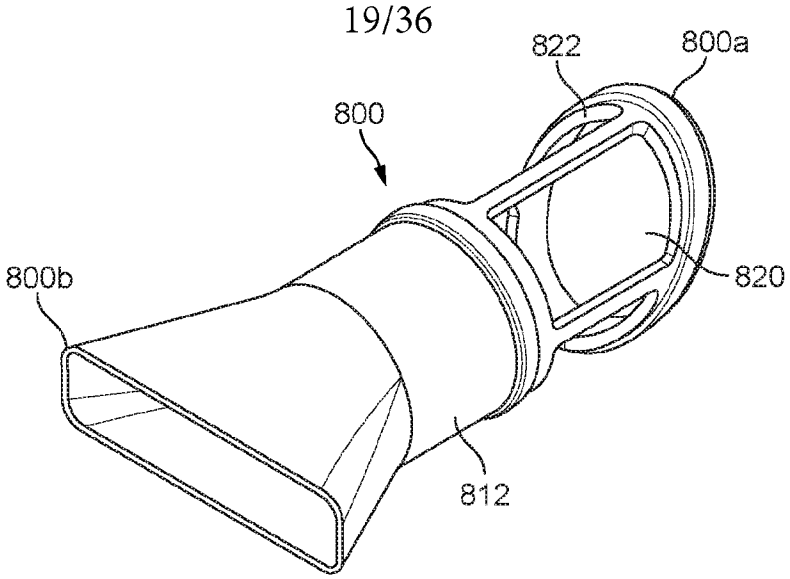

FIG. 11a

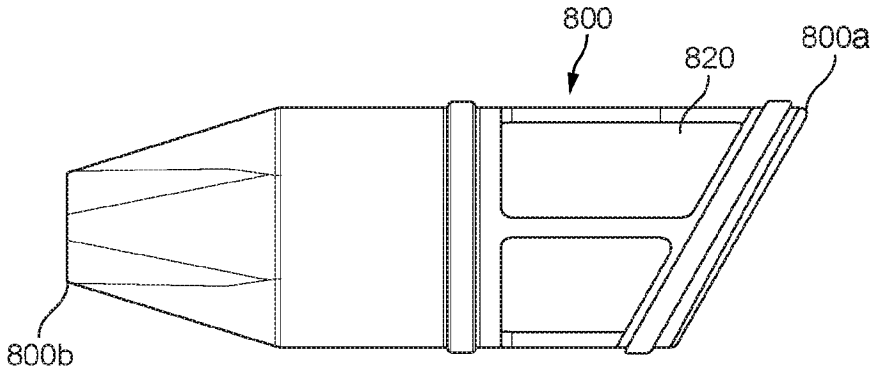

FIG. 11b

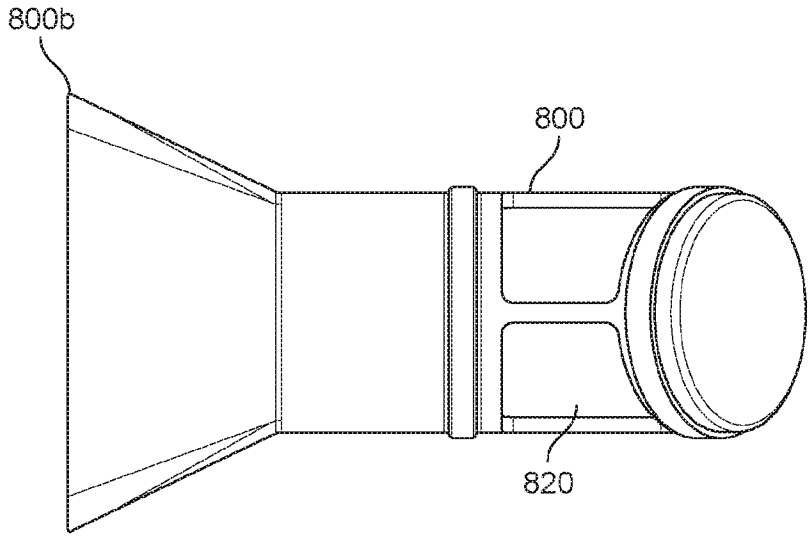

FIG. 11c

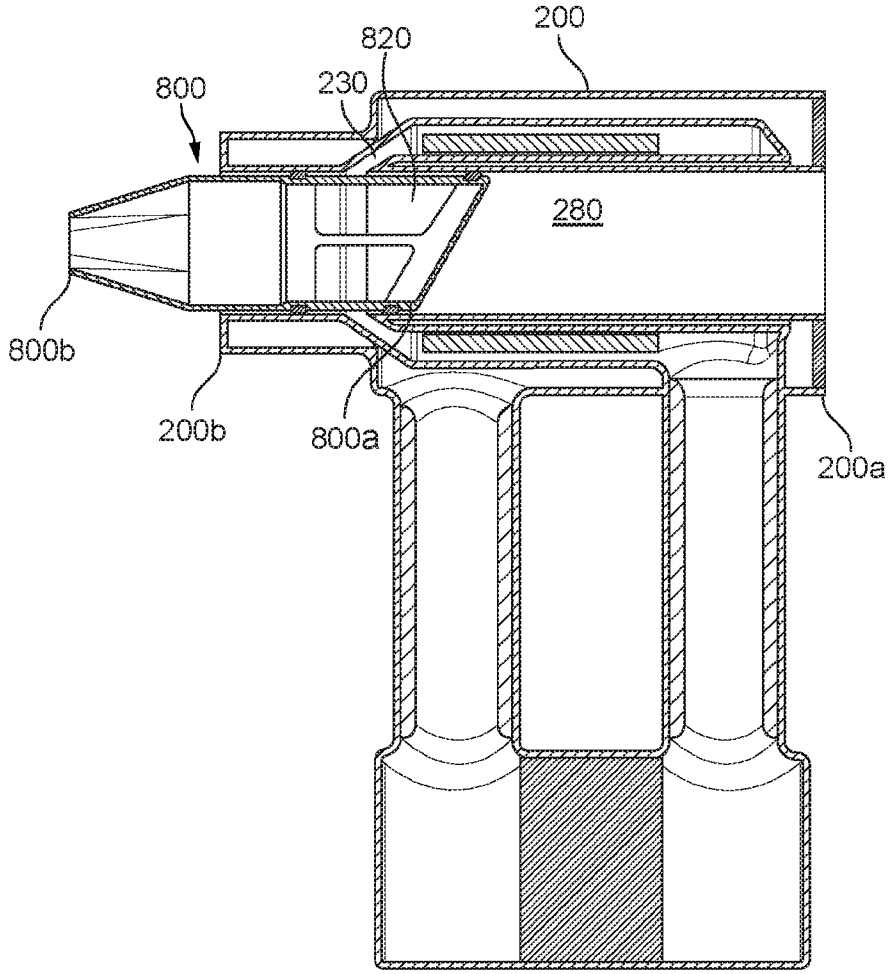

FIG. 11d

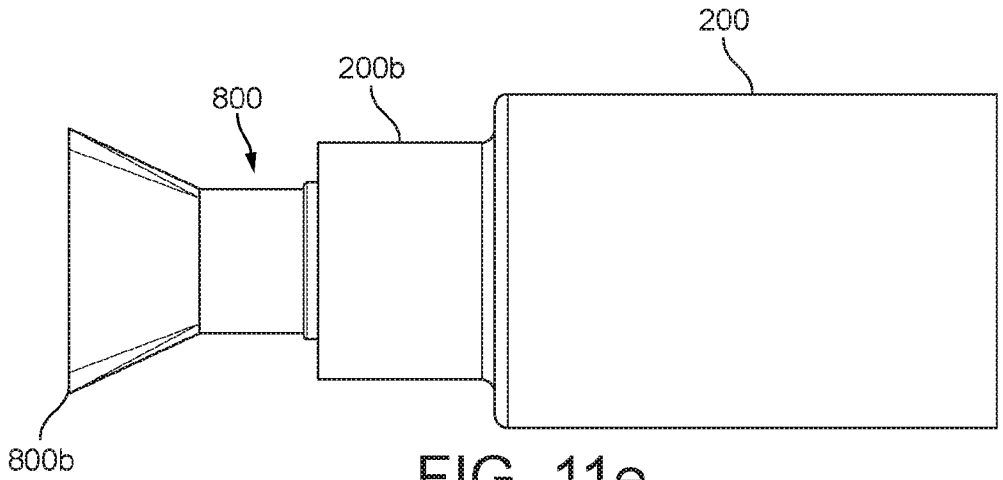

FIG. 11e

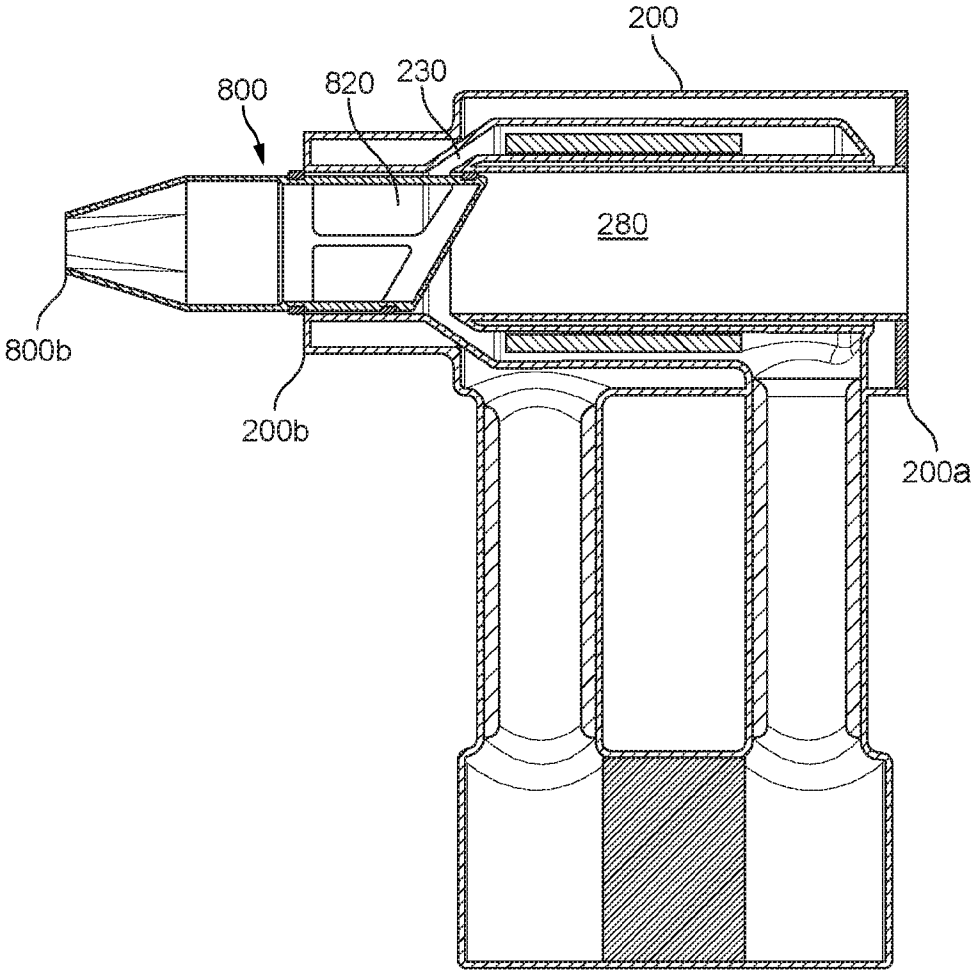

FIG. 11f

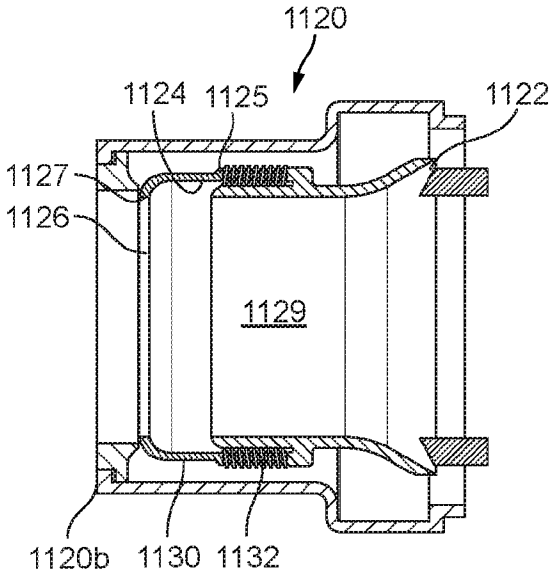

FIG. 12a

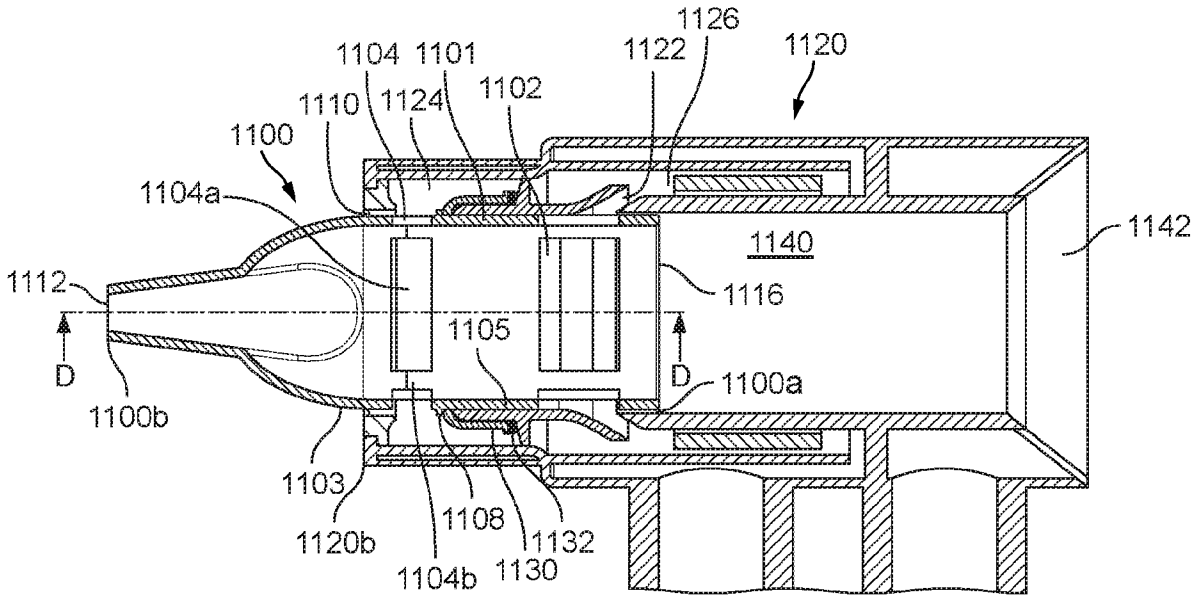

FIG. 12b

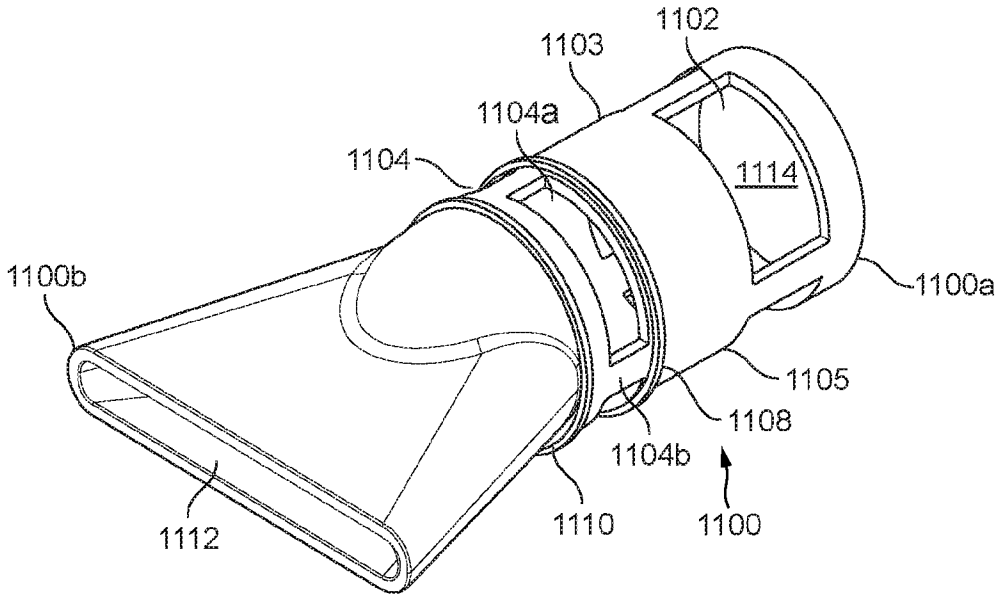

FIG. 12c

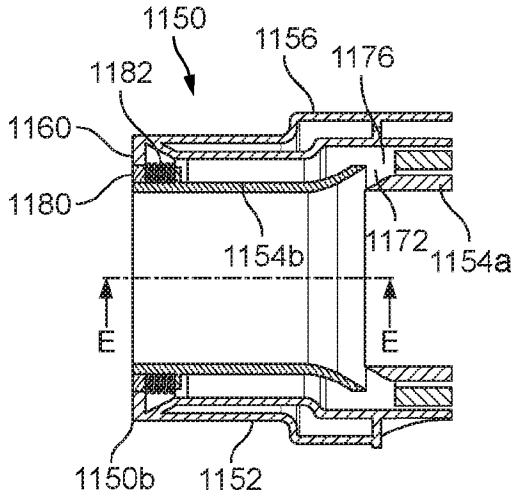

FIG. 13a

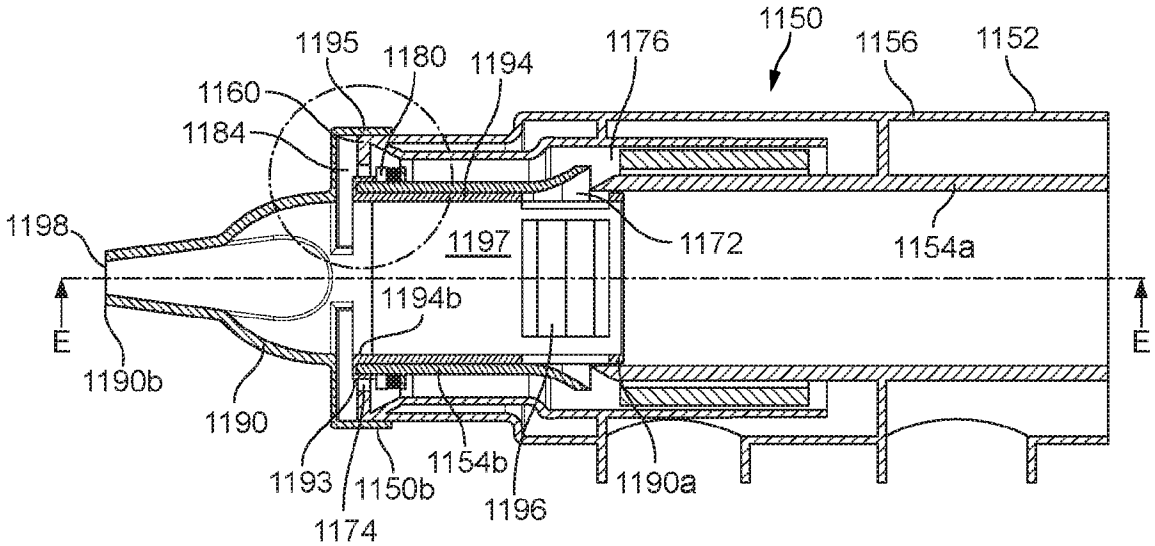

FIG. 13b

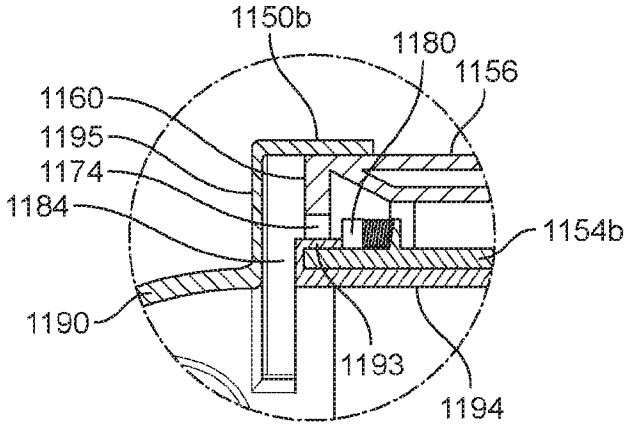

FIG. 13c

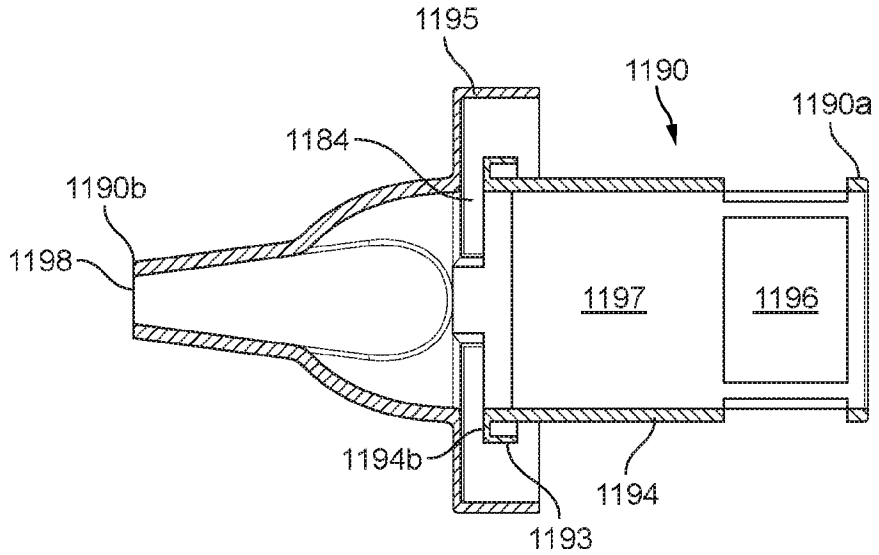

FIG. 13d

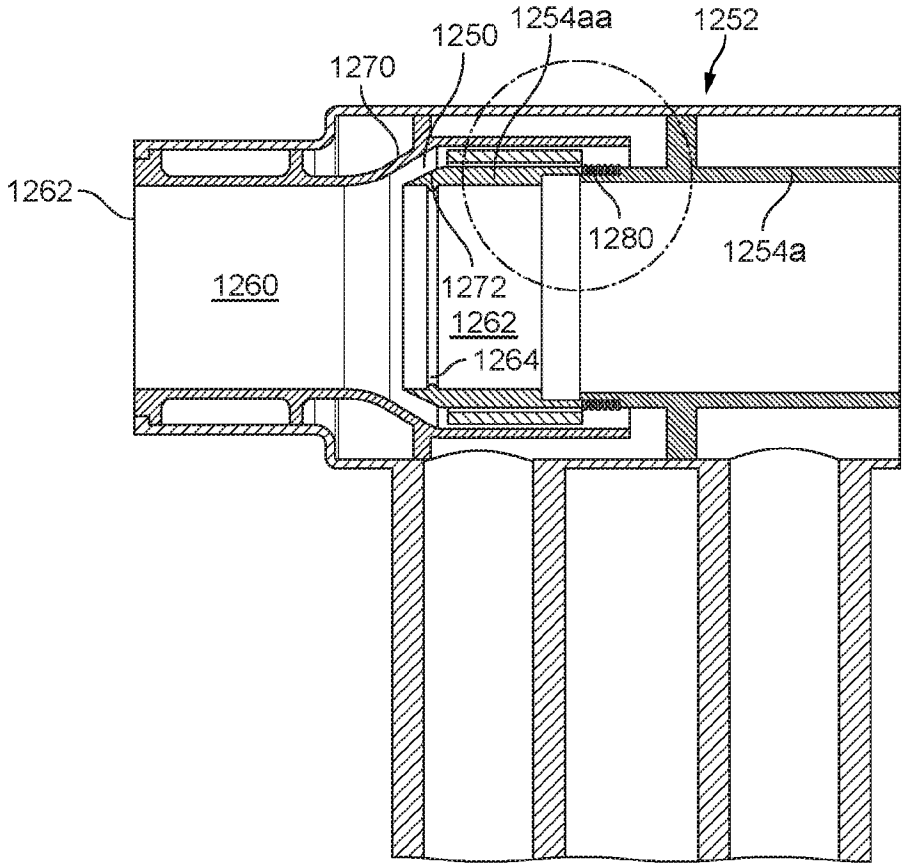

FIG. 14a

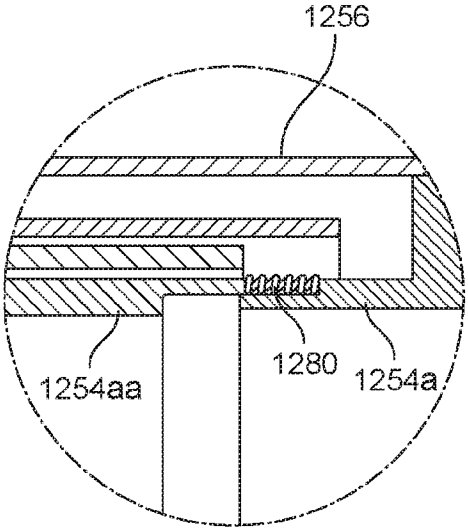

FIG. 14b

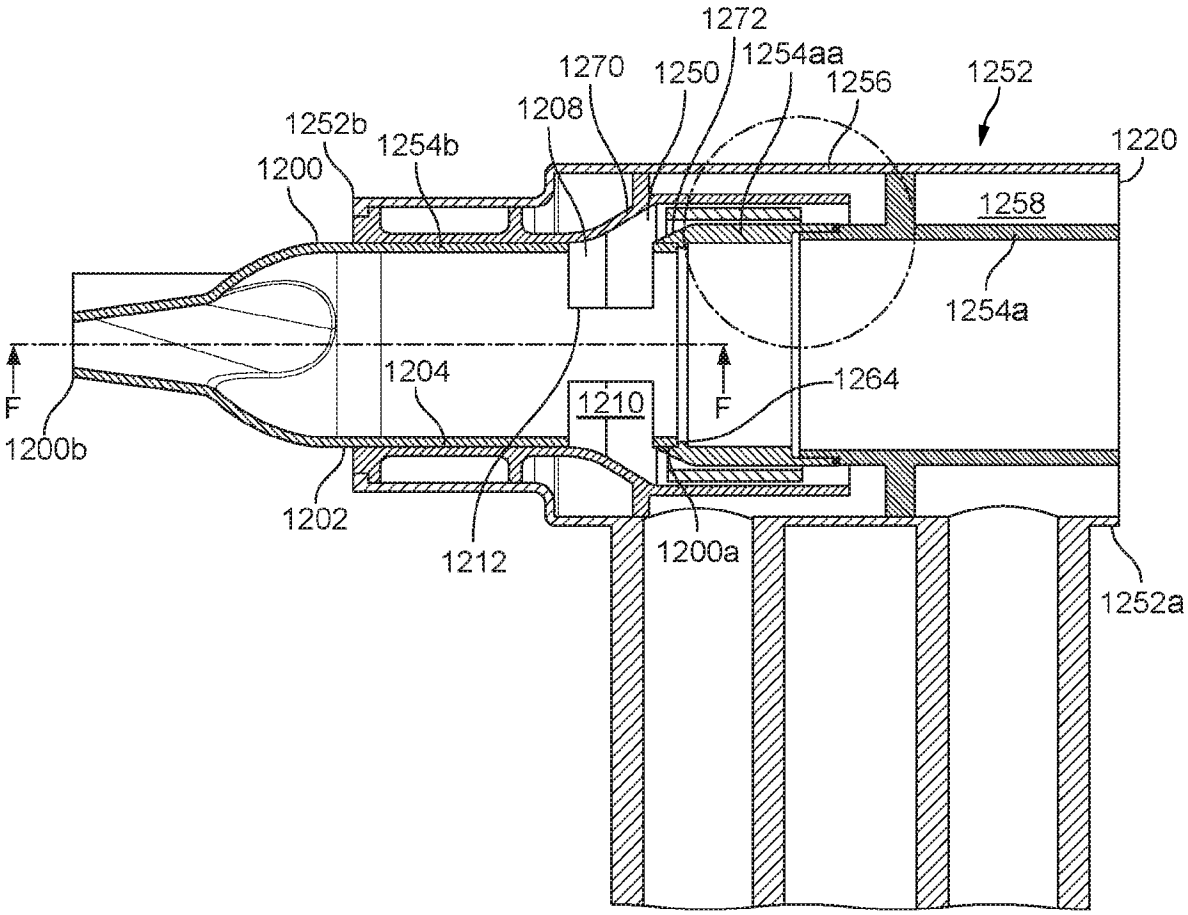

FIG. 14c

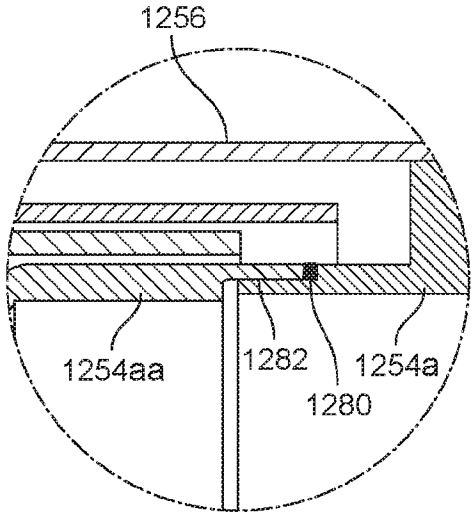

FIG. 14d

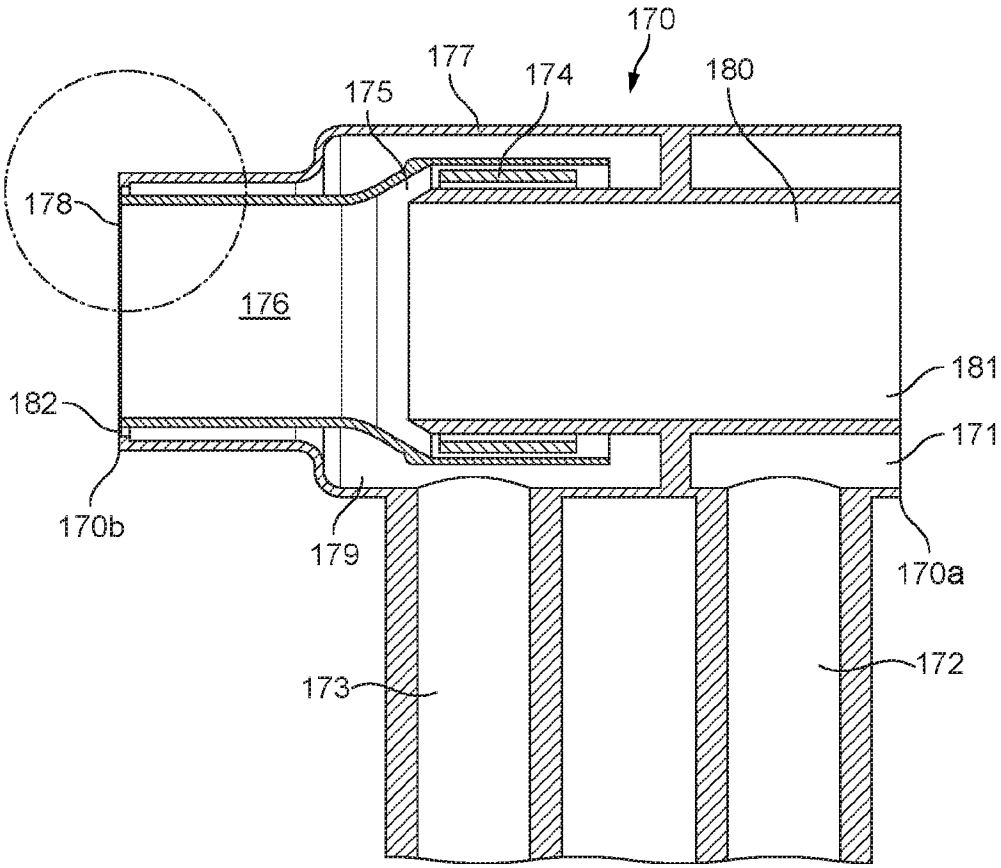

FIG. 15a

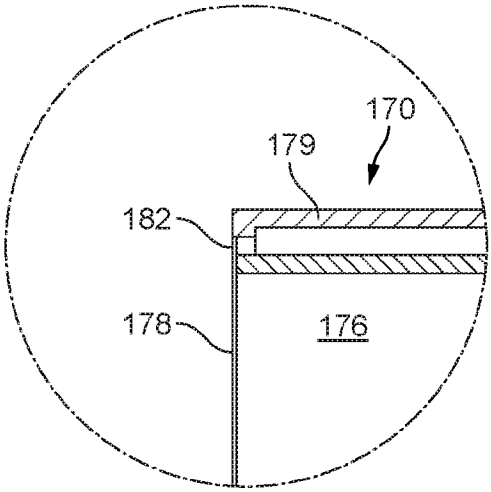

FIG. 15b

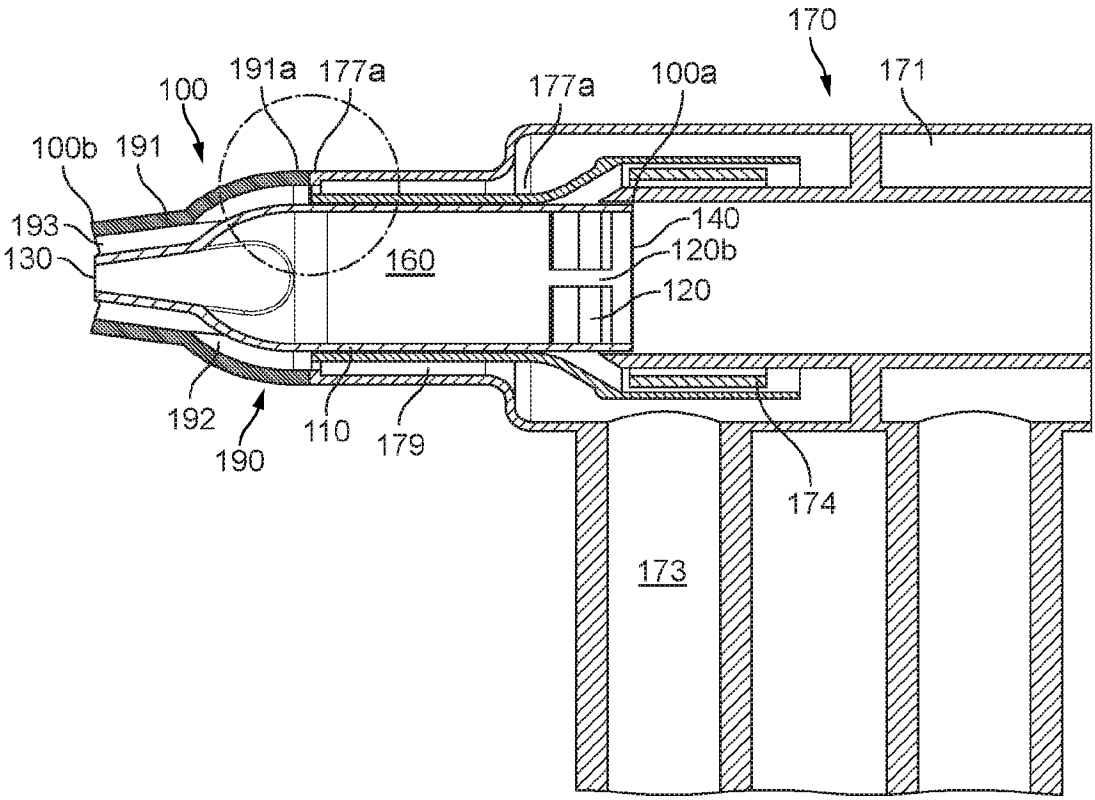

FIG. 15c

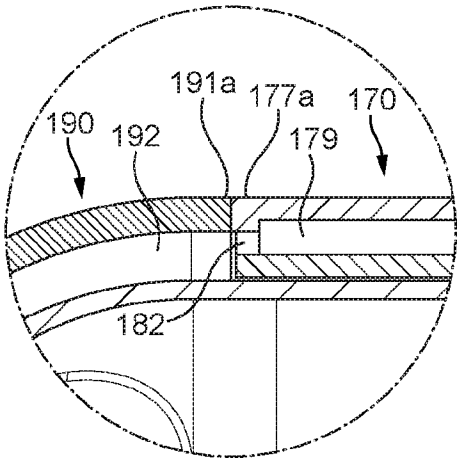

FIG. 15d

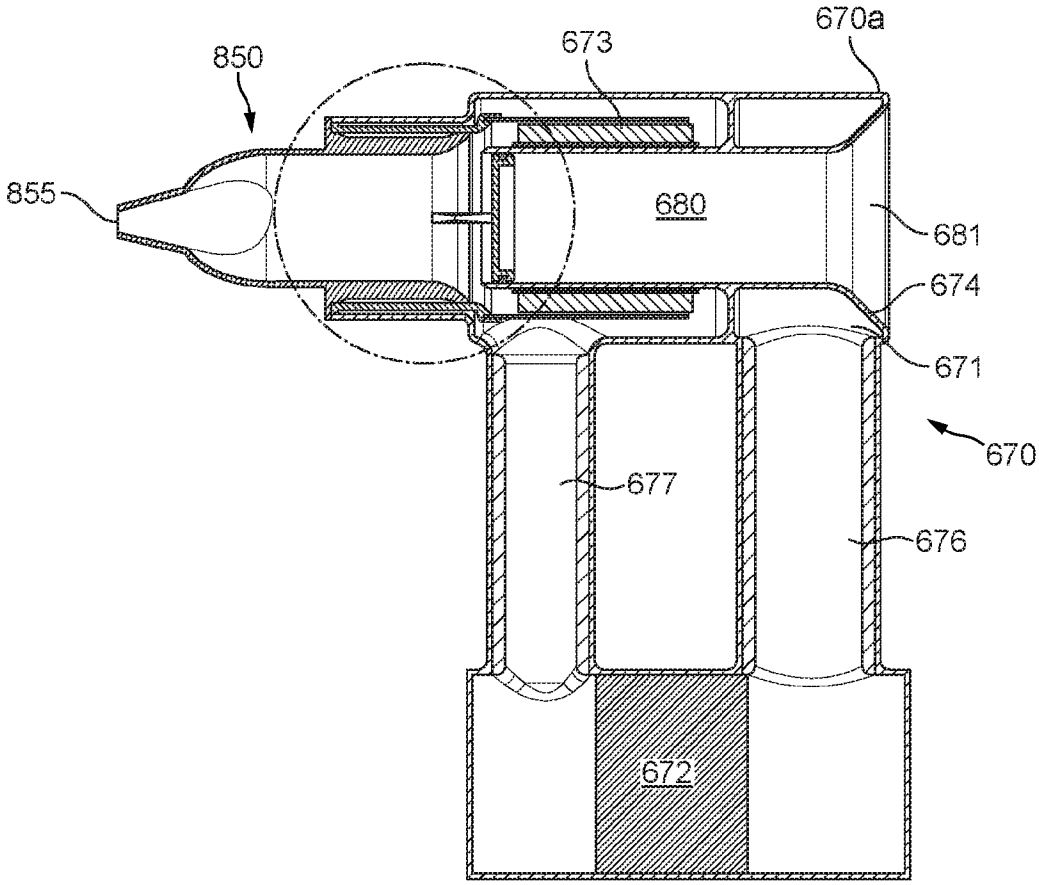

FIG. 16a

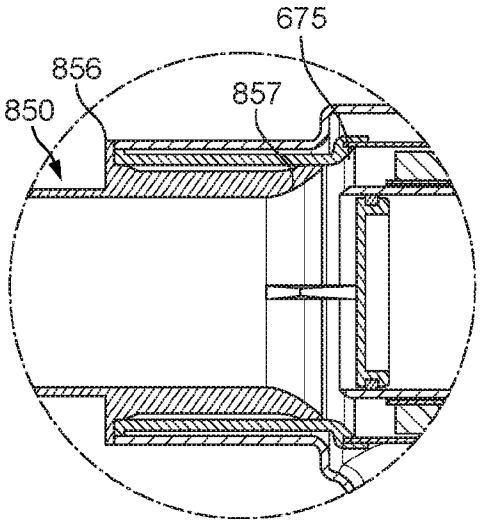

FIG. 16b

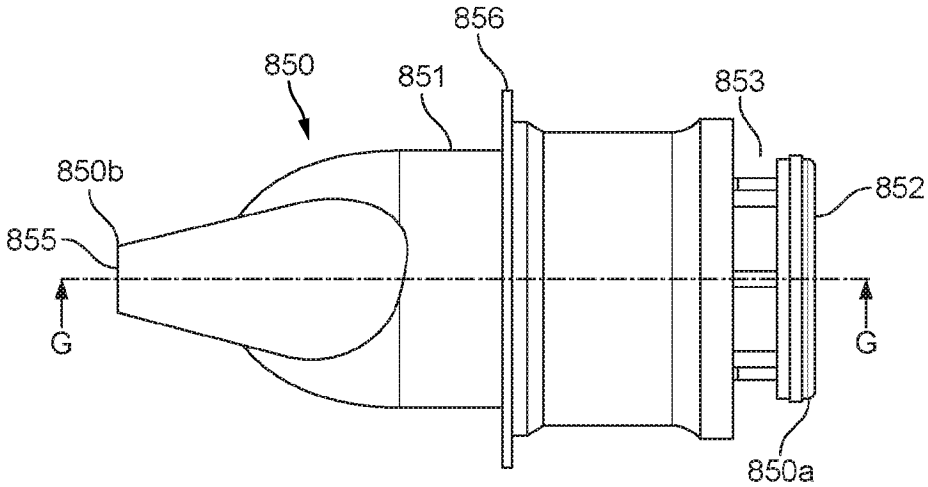

FIG. 16c

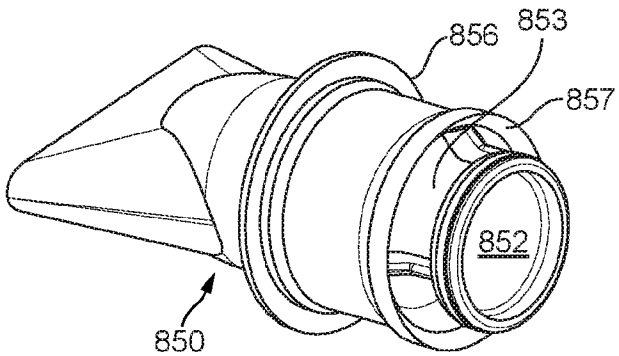

FIG. 16d

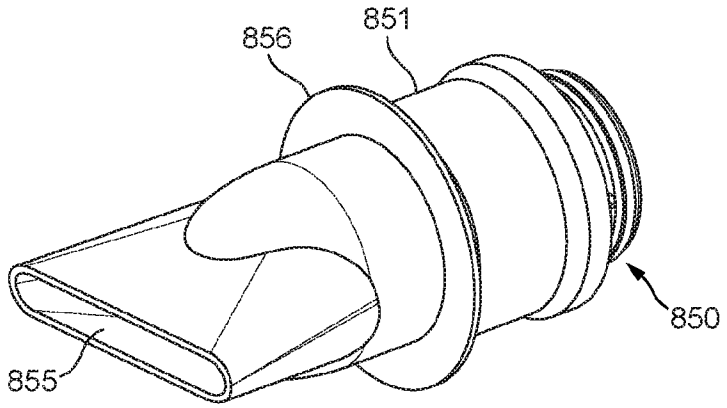

FIG. 16e

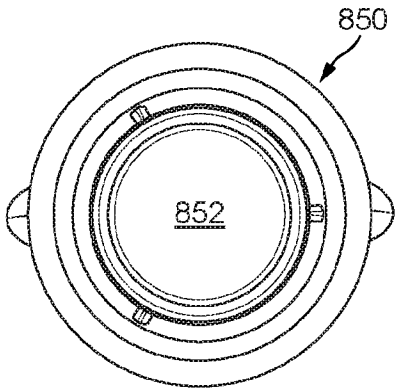

FIG. 16f

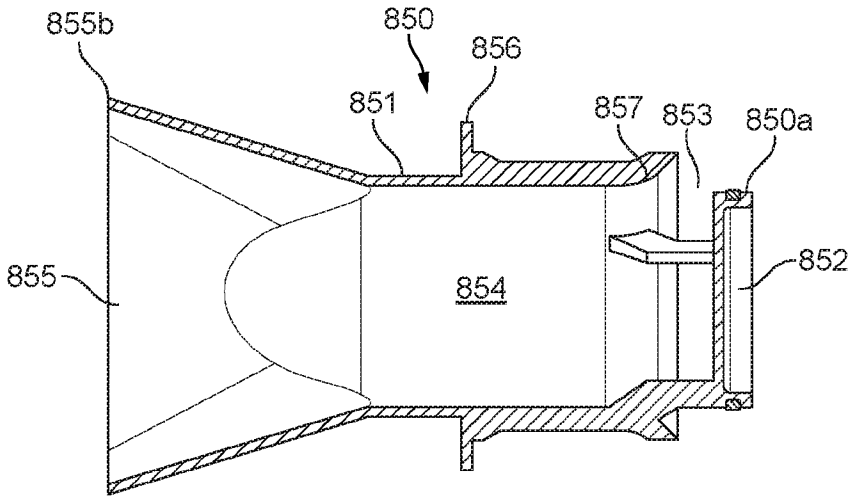

FIG. 16g

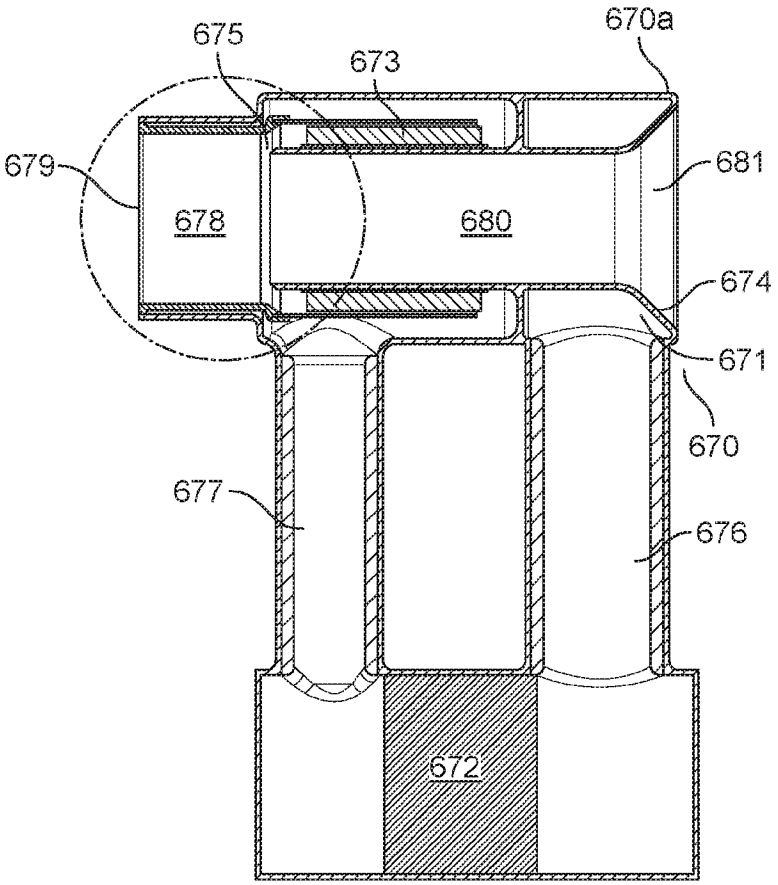

FIG. 16h

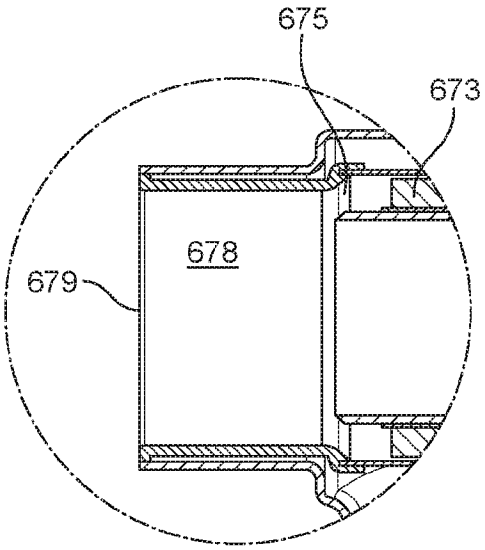

FIG. 16i

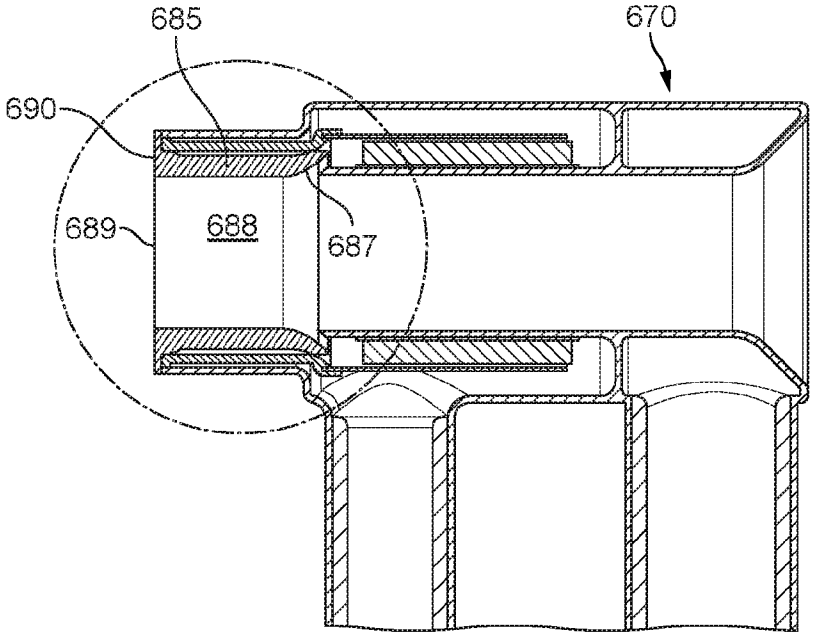

FIG. 16j

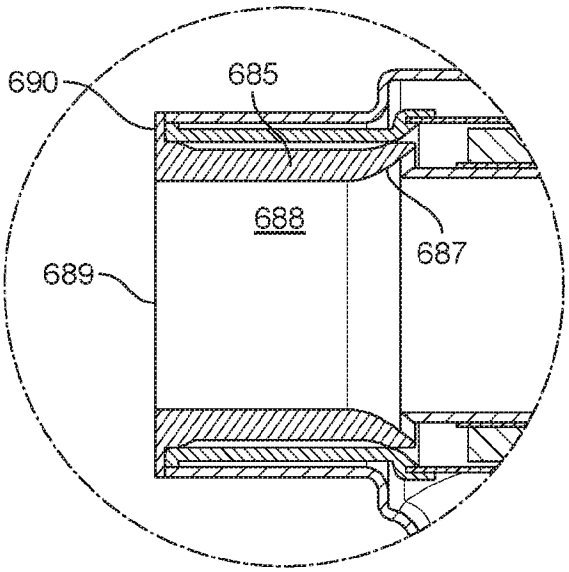

FIG. 16k

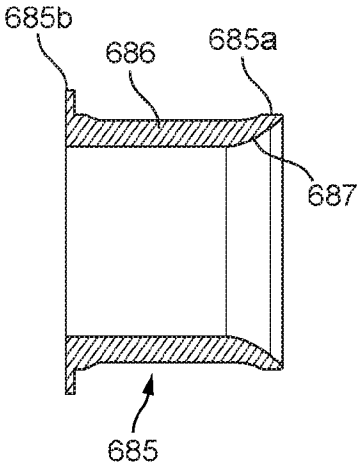

FIG. 16l

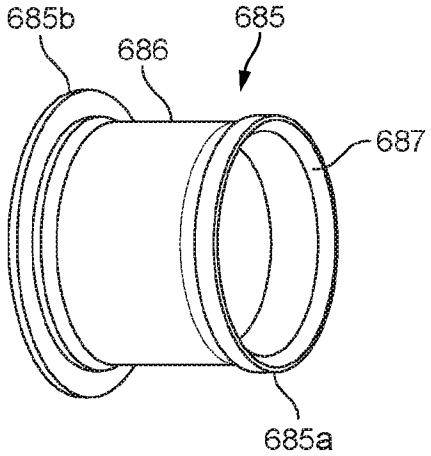

FIG. 16m

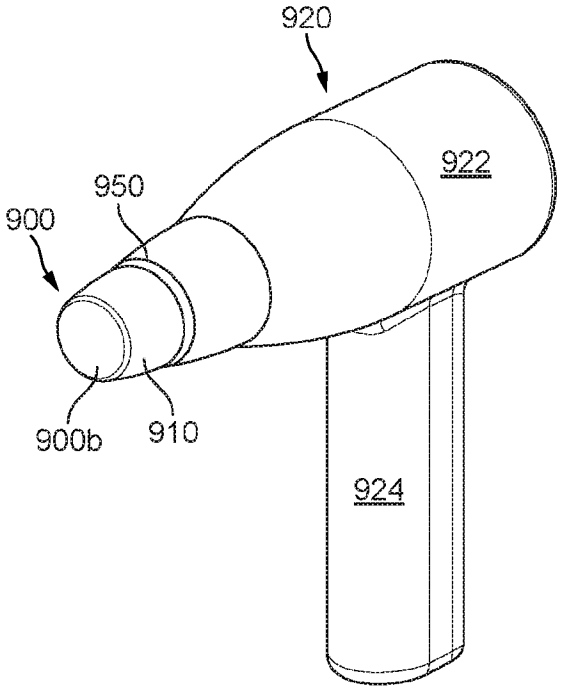

FIG. 17a

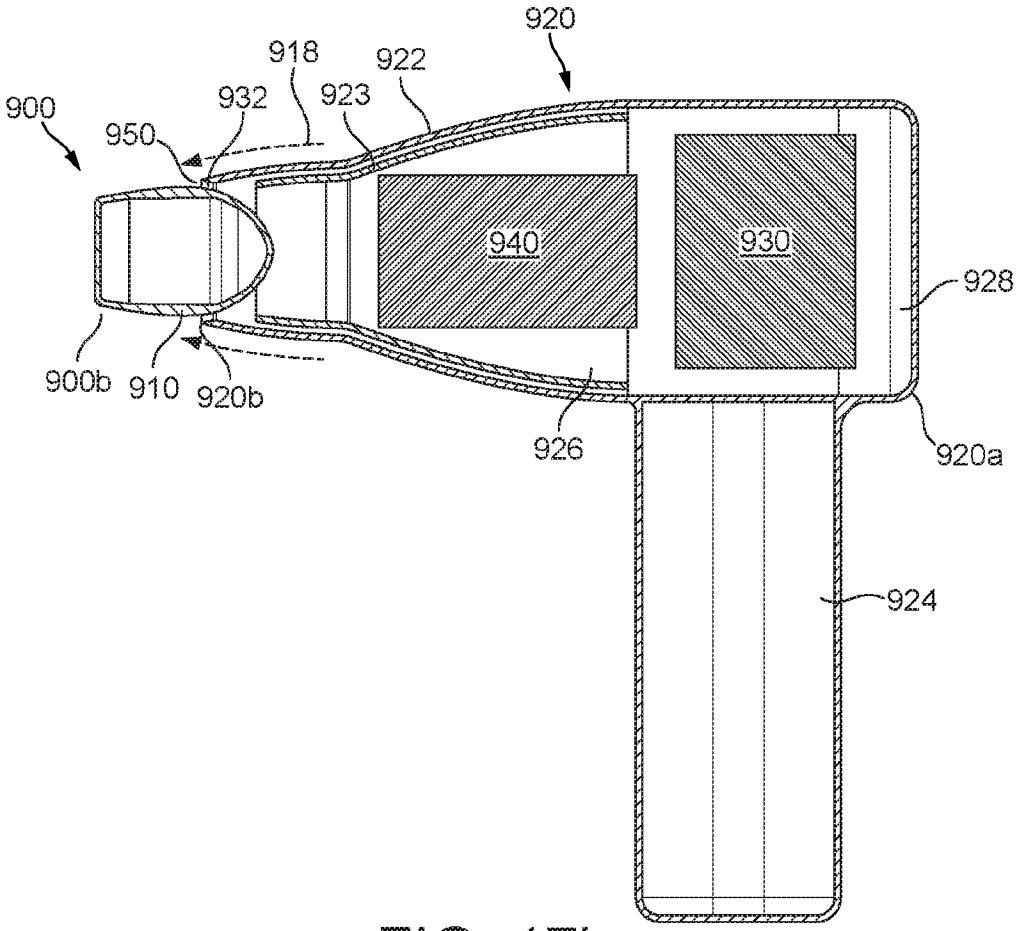

FIG. 17b

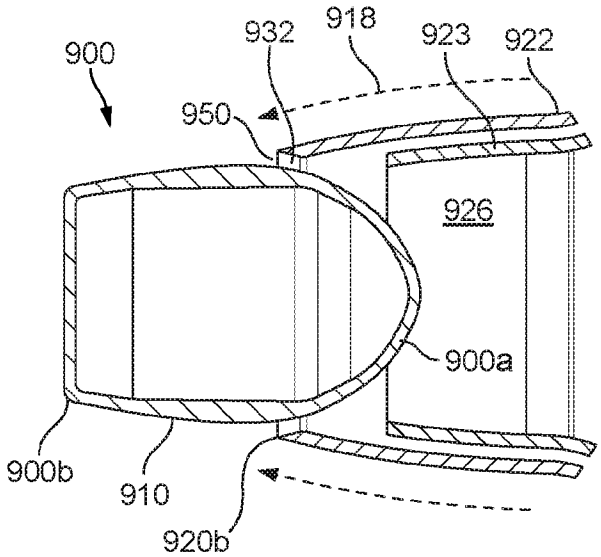

FIG. 17c

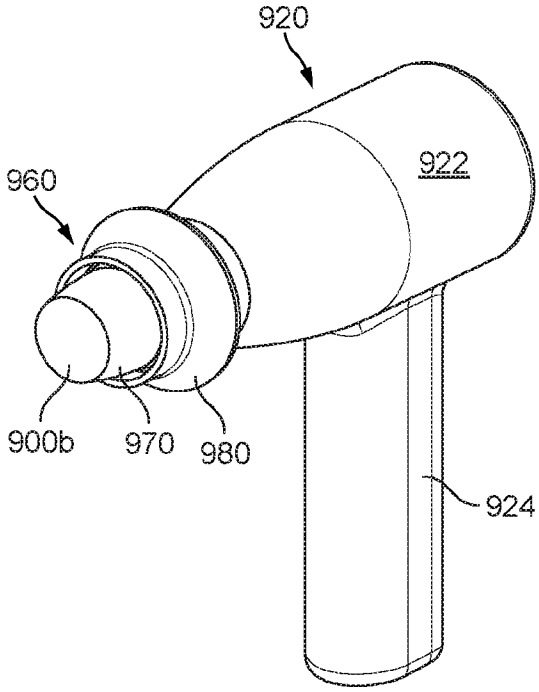

FIG. 18a

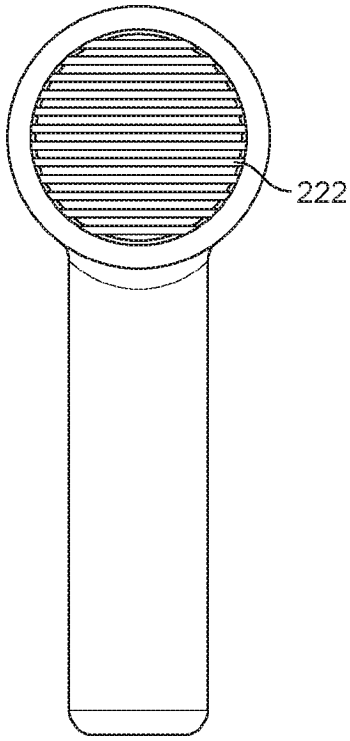

FIG. 18b

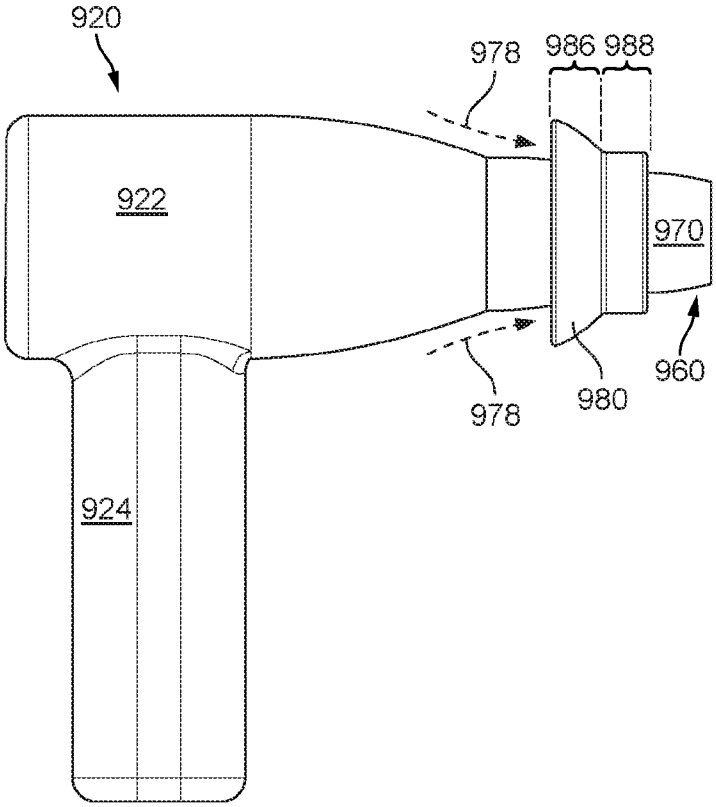

FIG. 18c

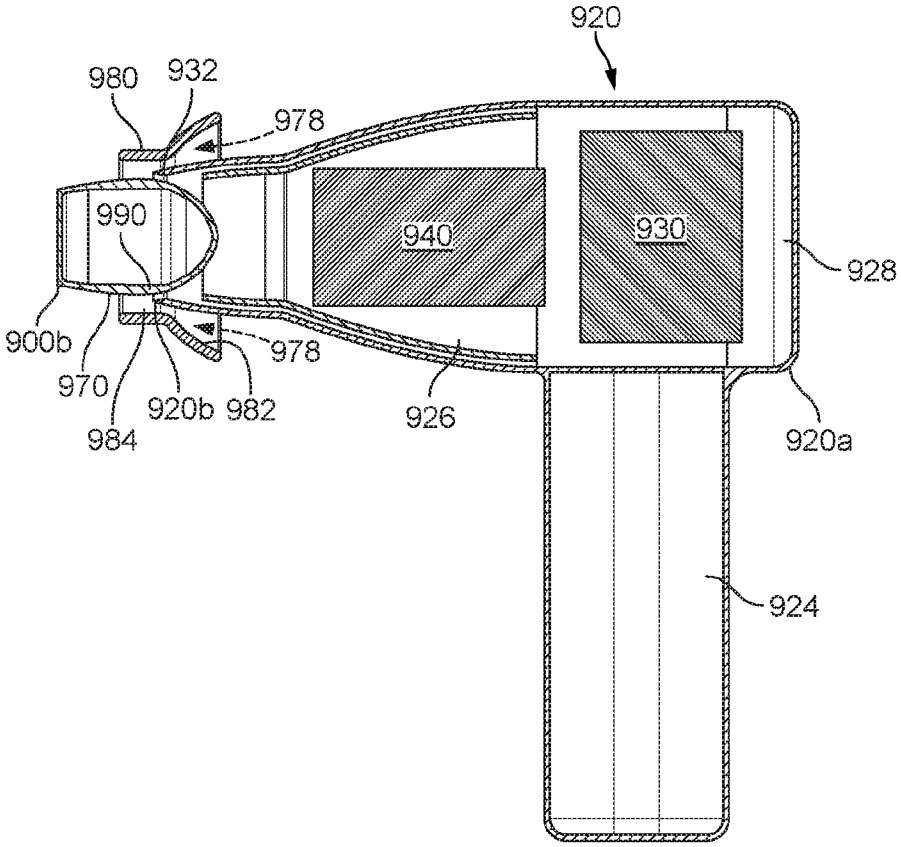

FIG. 18d

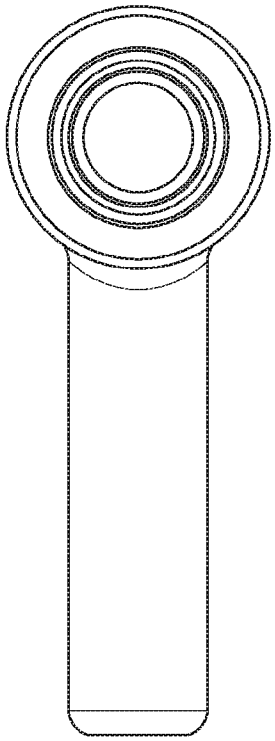

FIG. 18e

INTERNATIONAL SEARCH REPORT

International application No
PCT/GB2013/051537

A. CLASSIFICATION OF SUBJECT MATTER
INV. A45D20/12
ADD.

According to International Patent Classification (IPC) or to both national classification and IPC

B. FIELDS SEARCHED

Minimum documentation searched (classification system followed by classification symbols)
A45D

Documentation searched other than minimum documentation to the extent that such documents are included in the fields searched

Electronic data base consulted during the international search (name of data base and, where practicable, search terms used)

EPO-Internal, WPI Data

C. DOCUMENTS CONSIDERED TO BE RELEVANT

Category*	Citation of document, with indication, where appropriate, of the relevant passages	Relevant to claim No.
X	JP 2006 051181 A (HITACHI MAXELL) 23 February 2006 (2006-02-23) the whole document	1-6

A	CN 101 292 806 B (SHANGHAI SUPERMAN ELECTRIC CO [CN] SHANGHAI SUPERMAN ELECTRIC CO LTD) 6 October 2010 (2010-10-06) the whole document	1

A	US 2004/163274 A1 (ANDREW MICHAEL A [US] ET AL) 26 August 2004 (2004-08-26) pages 2-4; figures	1-36

A	US 5 572 800 A (WEST CHARLES D [US]) 12 November 1996 (1996-11-12) the whole document	1-36

	-/--	

[X] Further documents are listed in the continuation of Box C.

[X] See patent family annex.

* Special categories of cited documents :

"A" document defining the general state of the art which is not considered to be of particular relevance

"E" earlier application or patent but published on or after the international filing date

"L" document which may throw doubts on priority claim(s) or which is cited to establish the publication date of another citation or other special reason (as specified)

"O" document referring to an oral disclosure, use, exhibition or other means

"P" document published prior to the international filing date but later than the priority date claimed

"T" later document published after the international filing date or priority date and not in conflict with the application but cited to understand the principle or theory underlying the invention

"X" document of particular relevance; the claimed invention cannot be considered novel or cannot be considered to involve an inventive step when the document is taken alone

"Y" document of particular relevance; the claimed invention cannot be considered to involve an inventive step when the document is combined with one or more other such documents, such combination being obvious to a person skilled in the art

"&" document member of the same patent family

Date of the actual completion of the international search	Date of mailing of the international search report
24 September 2013	01/10/2013

Name and mailing address of the ISA/	Authorized officer
European Patent Office, P.B. 5818 Patentlaan 2 NL - 2280 HV Rijswijk Tel. (+31-70) 340-2040, Fax: (+31-70) 340-3016	Dinescu, Daniela

3

Form PCT/ISA/210 (second sheet) (April 2005)

SharkNinja Ex. 1016
Page 81 of 83

INTERNATIONAL SEARCH REPORT

International application No
PCT/GB2013/051537

C(Continuation). DOCUMENTS CONSIDERED TO BE RELEVANT

Category*	Citation of document, with indication, where appropriate, of the relevant passages	Relevant to claim No.
X	JP 2004 113402 A (TESCOM KK) 15 April 2004 (2004-04-15) the whole document -----	1-5,36

3

Form PCT/ISA/210 (continuation of second sheet) (April 2005)

SharkNinja Ex. 1016
Page 82 of 83

INTERNATIONAL SEARCH REPORT

Information on patent family members

International application No
PCT/GB2013/051537

Patent document cited in search report	Publication date	Patent family member(s)	Publication date
JP 2006051181 A	23-02-2006	JP 4325863 B2	02-09-2009
		JP 2006051181 A	23-02-2006
CN 101292806 B	06-10-2010	NONE	
US 2004163274 A1	26-08-2004	AU 2004200014 A1	22-07-2004
		CA 2453796 A1	06-07-2004
		NZ 530391 A	29-04-2005
		US 2004163274 A1	26-08-2004
US 5572800 A	12-11-1996	NONE	
JP 2004113402 A	15-04-2004	JP 4068424 B2	26-03-2008
		JP 2004113402 A	15-04-2004