US 20090174263A1

(19) United States

(12) Patent Application Publication

(10) Pub. No.: US 2009/0174263 A1

(43) Pub. Date: Jul. 9, 2009

Baarman et al.

(54) **INDUCTIVE POWER SUPPLY WITH DUTY CYCLE CONTROL**

(75) Inventors: **David W. Baarman**, Fennville, MI (US); **Scott A. Mollema**, Rockford, MI (US); **Joshua K. Schwannecke**, Portland, MI (US); **Thomas Jay Leppien**, Grand Haven, MI (US); **Kenneth Michael Burns**, North Canton, OH (US)

Correspondence Address:
WARNER, NORCROSS & JUDD
IN RE: ALTICOR INC.
INTELLECTUAL PROPERTY GROUP, 111 LYON STREET, N. W. STE 900
GRAND RAPIDS, MI 49503-2489 (US)

(73) Assignee: **ACCESS BUSINESS GROUP INTERNATIONAL LLC**, Ada, MI (US)

(21) Appl. No.: **12/349,840**

(22) Filed: **Jan. 7, 2009**

Related U.S. Application Data

(60) Provisional application No. 61/019,411, filed on Jan. 7, 2008.

Publication Classification

(51) **Int. Cl.**
H02J 17/00 (2006.01)
H02J 7/00 (2006.01)

(52) **U.S. Cl.** **307/104**; 320/106

(57) **ABSTRACT**

An inductive power supply that maintains resonance and adjusts duty cycle based on feedback from a secondary circuit. A controller, driver circuit and switching circuit cooperate to generate an AC signal at a selected operating frequency and duty cycle. The AC signal is applied to the tank circuit to create an inductive field for powering the secondary. The secondary communicates feedback about the received power back to the primary controller. The power transfer efficiency may be optimized by maintaining the operating frequency substantially at resonance, and the amount of power transferred may be controlled by adjusting the duty cycle.

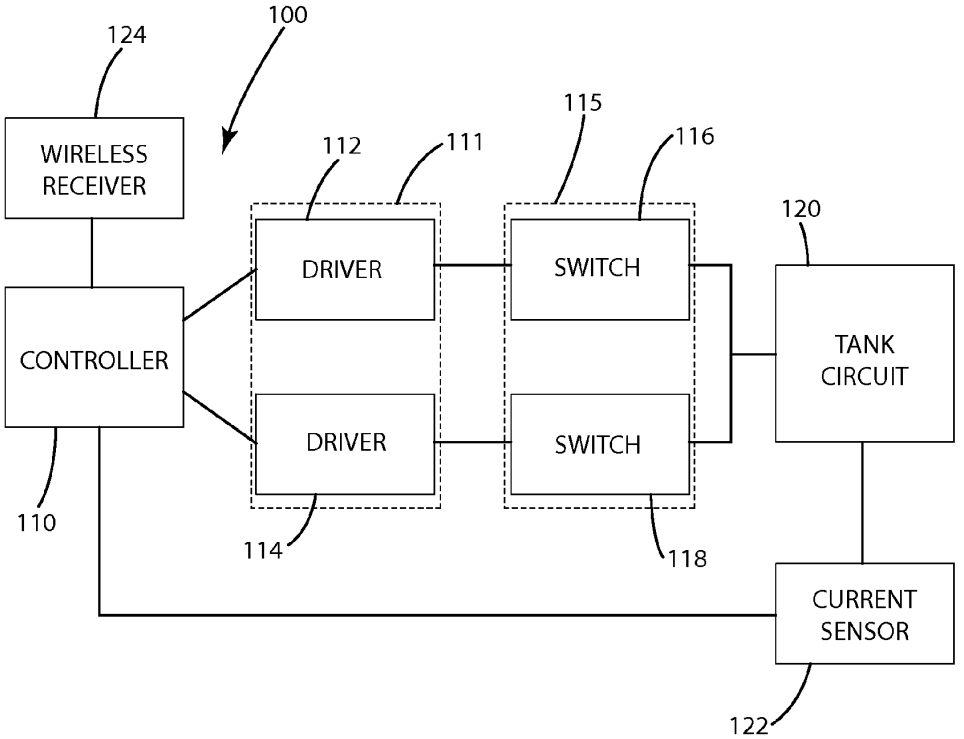

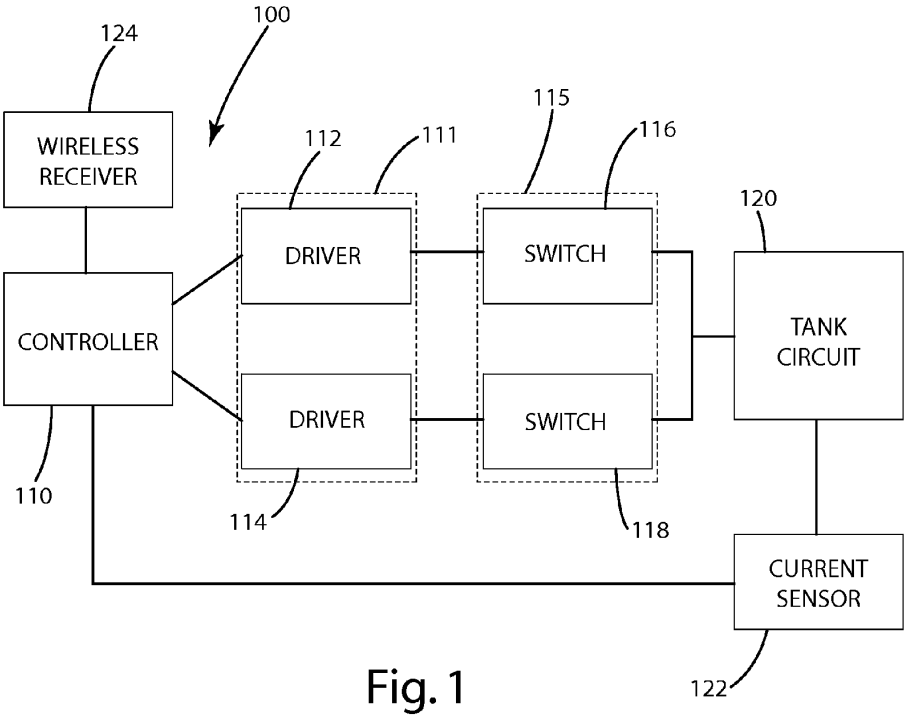
100
124
WIRELESS RECEIVER
CONTROLLER
110
112
111
DRIVER
DRIVER
114
115
116
SWITCH
SWITCH
118
120
TANK CIRCUIT
CURRENT SENSOR
122

Fig. 1

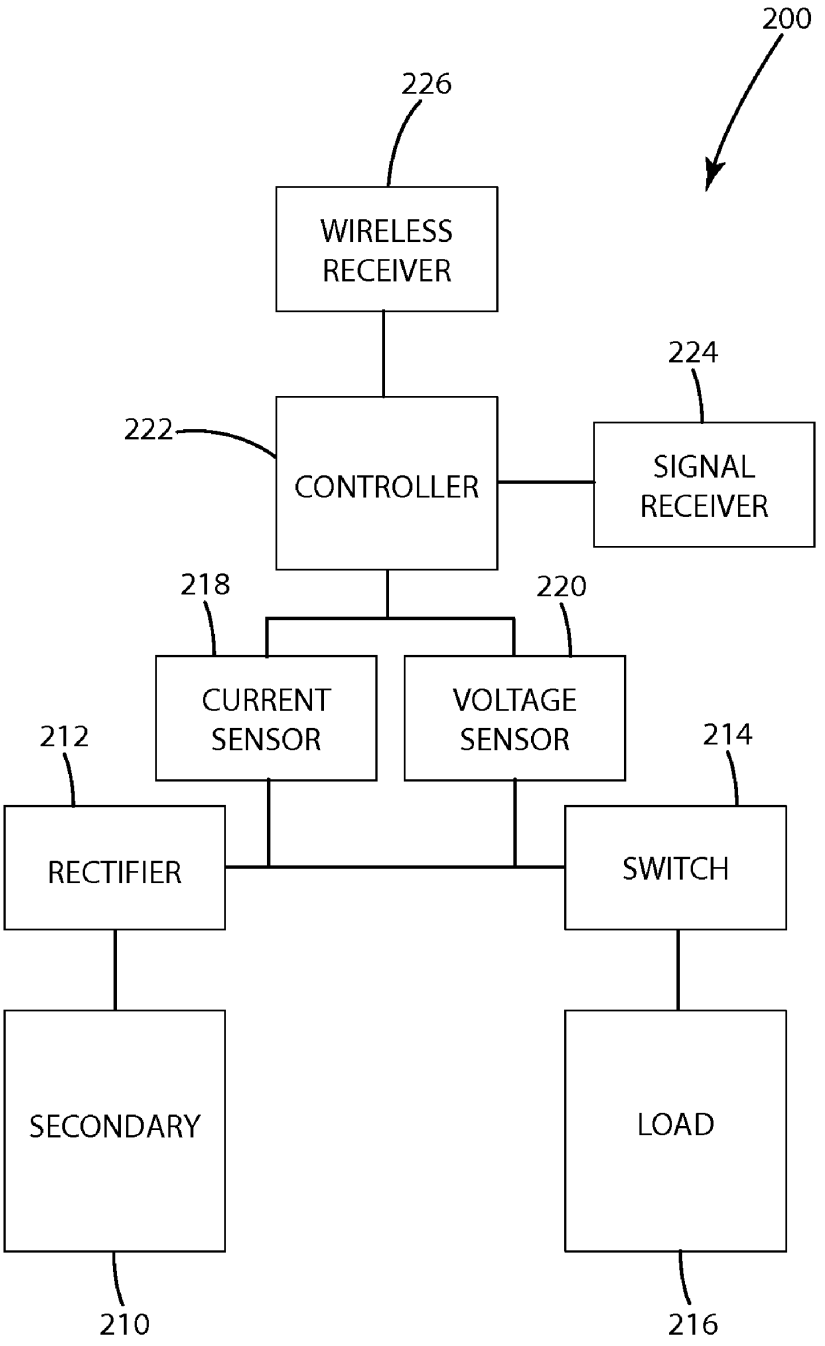
200
226
WIRELESS RECEIVER
224
222
CONTROLLER
SIGNAL RECEIVER
218
220
CURRENT SENSOR
VOLTAGE SENSOR
212
214
RECTIFIER
SWITCH
SECONDARY
LOAD
210
216

Fig. 2

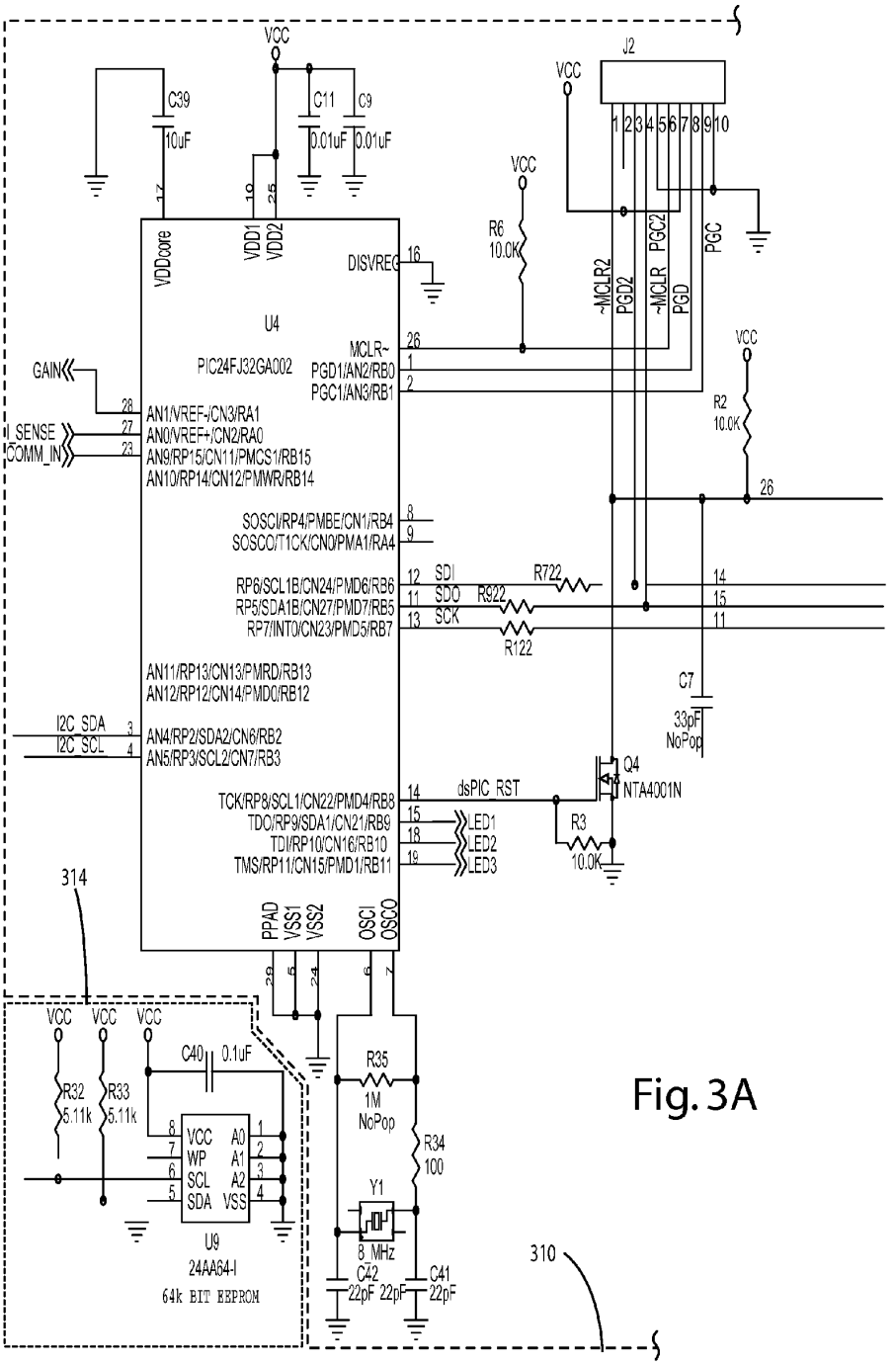
VCC
C39
10uF
C11
0.01uF
C9
0.01uF
J2
1 2 3 4 5 6 7 8 9 10
R6
10.0K
~MCLR2
PGD2
~MCLR
PGC2
PGD
PGC
VDDcore
VDD1
VDD2
DISVREG
U4
PIC24FJ32GA002
MCLR~
PGD1/AN2/RB0
PGC1/AN3/RB1
GAIN
I_SENSE
COMM_IN
AN1/VREF-/CN3/RA1
AN0/VREF+/CN2/RA0
AN9/RP15/CN11/PMCS1/RB15
AN10/RP14/CN12/PMWR/RB14
R2
10.0K
SOSCI/RP4/PMBE/CN1/RB4
SOSCO/T1CK/CN0/PMA1/RA4
RP6/SCL1B/CN24/PMD6/RB6
RP5/SDA1B/CN27/PMD7/RB5
RP7/INT0/CN23/PMD5/RB7
SDI
SDO
SCK
R722
R922
R122
AN11/RP13/CN13/PMRD/RB13
AN12/RP12/CN14/PMD0/RB12
C7
33pF
NoPop
I2C_SDA
I2C_SCL
AN4/RP2/SDA2/CN6/RB2
AN5/RP3/SCL2/CN7/RB3
Q4
NTA4001N
dsPIC_RST
TCK/RP8/SCL1/CN22/PMD4/RB8
TDO/RP9/SDA1/CN21/RB9
TDI/RP10/CN16/RB10
TMS/RP11/CN15/PMD1/RB11
LED1
LED2
LED3
R3
10.0K
314
PPAD
VSS1
VSS2
OSCI
OSCO
VCC
R32
5.11k
R33
5.11k
C40
0.1uF
VCC
WP
SCL
SDA
A0
A1
A2
VSS
U9
24AA64-I
64k BIT EEPROM
R35
1M
NoPop
R34
100
Y1
8 MHz
C42
22pF
C41
22pF
310

Fig. 3A

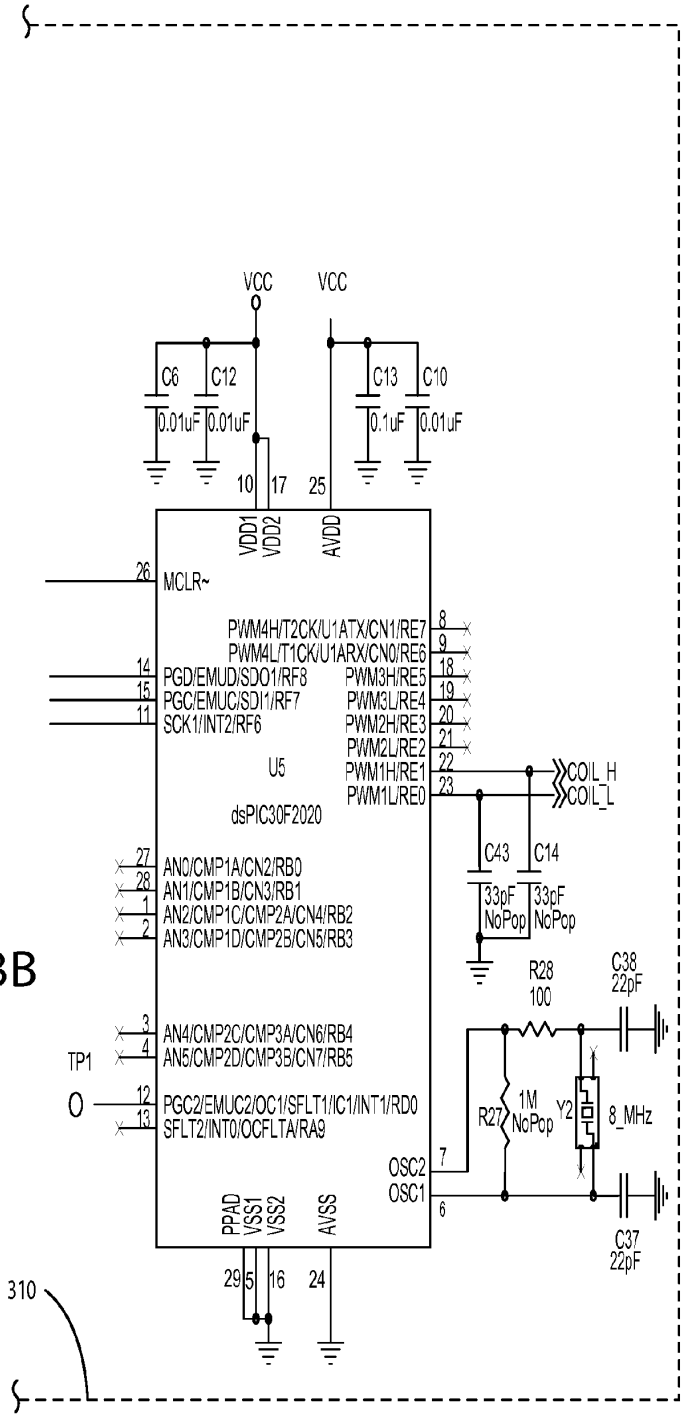
VCC
VCC
C6
C12
C13
C10
0.01uF
0.01uF
0.1uF
0.01uF
10
17
25
VDD1
VDD2
AVDD
26
MCLR~
PWM4H/T2CK/U1ATX/CN1/RE7
PWM4L/T1CK/U1ARX/CN0/RE6
14
PGD/EMUD/SDO1/RF8
15
PGC/EMUC/SDI1/RF7
11
SCK1/INT2/RF6
PWM3H/RE5
PWM3L/RE4
PWM2H/RE3
PWM2L/RE2
PWM1H/RE1
PWM1L/RE0
U5
dsPIC30F2020
COIL_H
COIL_L
C43
C14
33pF
NoPop
33pF
NoPop
27
AN0/CMP1A/CN2/RB0
28
AN1/CMP1B/CN3/RB1
1
AN2/CMP1C/CMP2A/CN4/RB2
2
AN3/CMP1D/CMP2B/CN5/RB3
R28
100
C38
22pF
3
AN4/CMP2C/CMP3A/CN6/RB4
4
AN5/CMP2D/CMP3B/CN7/RB5
TP1
12
PGC2/EMUC2/OC1/SFLT1/IC1/INT1/RD0
13
SFLT2/INT0/OCFLTA/RA9
R27
1M
NoPop
Y2
8_MHz
OSC2
OSC1
7
6
C37
22pF
PPAD
VSS1
VSS2
AVSS
29
5
16
24
310

Fig. 3B

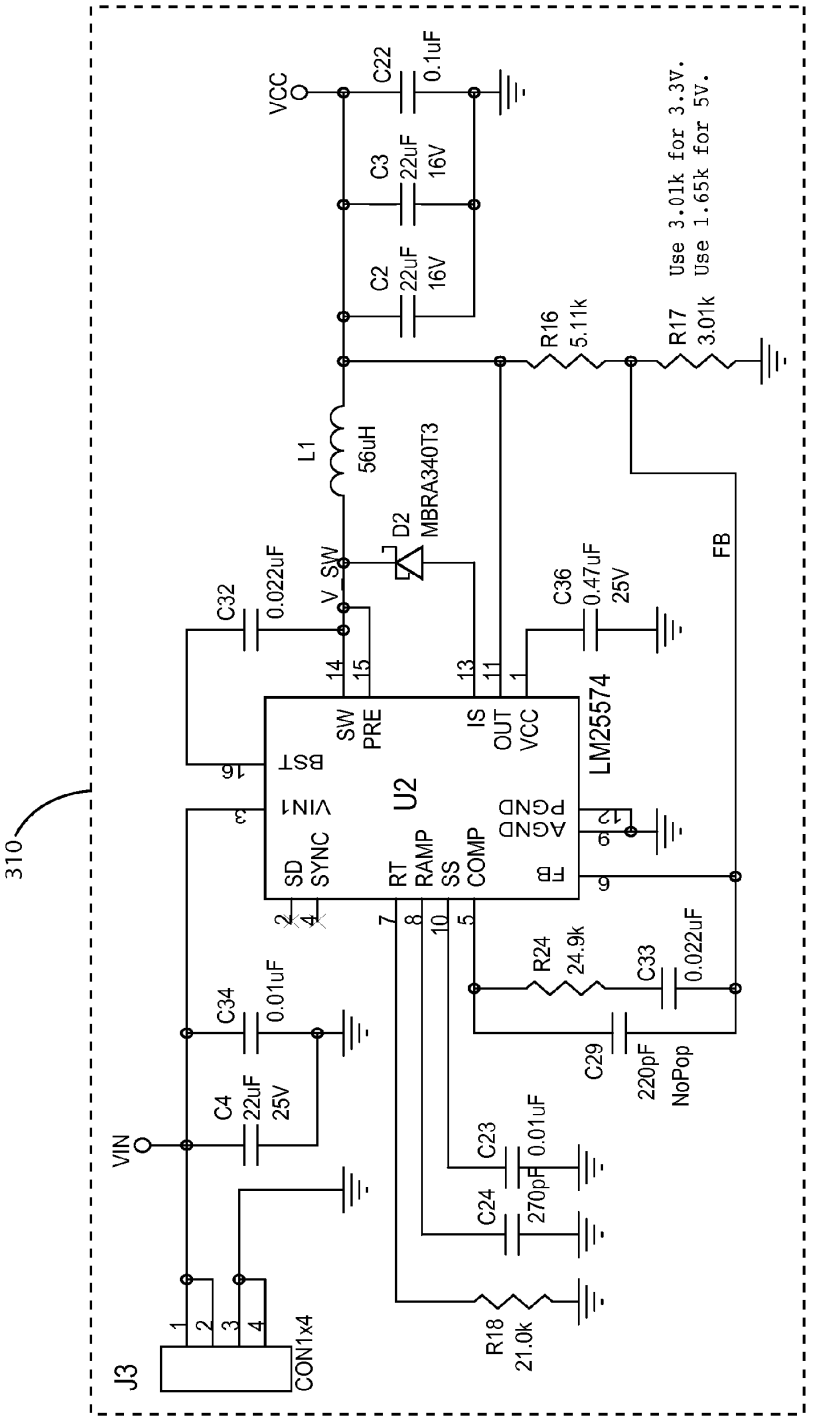
310
VCC
C22
0.1uF
C3
22uF
16V
C2
22uF
16V
R16
5.11k
R17
3.01k
Use 3.01k for 3.3V.
Use 1.65k for 5V.
L1
56uH
D2
MBRA340T3
C32
0.022uF
V_SW
C36
0.47uF
25V
FB
U2
LM25574
SW
PRE
IS
OUT
VCC
BST
VIN1
SD
SYNC
RT
RAMP
SS
COMP
AGND
PGND
FB
R24
24.9k
C33
0.022uF
C29
220pF
NoPop
C34
0.01uF
C4
22uF
25V
VIN
C23
0.01uF
C24
270pF
R18
21.0k
J3
CON1x4

Fig. 3C

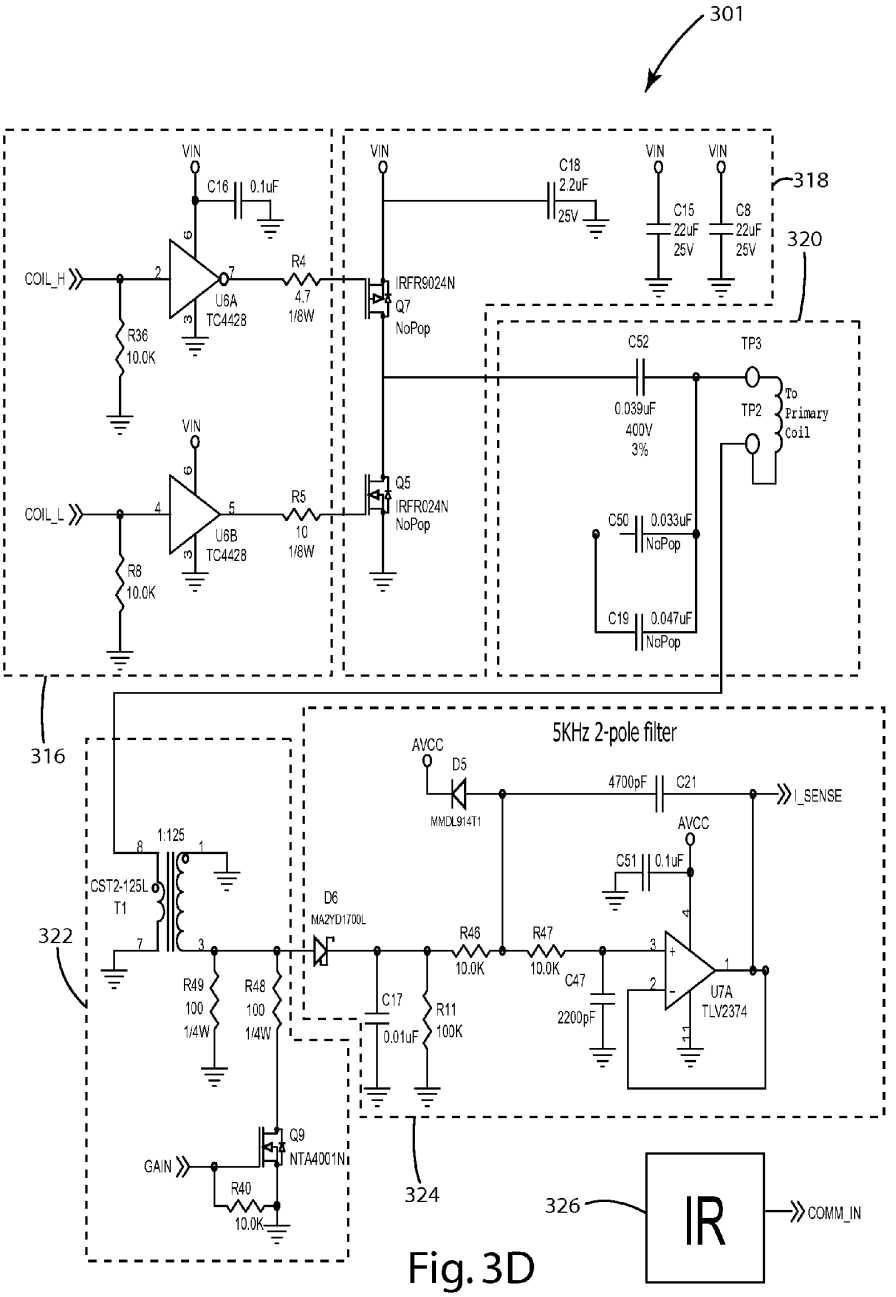
301
318
320
316
322
324
326
VIN
C16 0.1uF
C18 2.2uF 25V
C15 22uF 25V
C8 22uF 25V
COIL_H
R36 10.0K
U6A TC4428
R4 4.7 1/8W
IRFR9024N Q7 NoPop
C52 0.039uF 400V 3%
TP3
TP2
To Primary Coil
COIL_L
R8 10.0K
U6B TC4428
R5 10 1/8W
Q5 IRFR024N NoPop
C50 0.033uF NoPop
C19 0.047uF NoPop
5KHz 2-pole filter
AVCC
D5 MMDL914T1
4700pF C21
I_SENSE
C51 0.1uF
1:125
CST2-125L T1
D6 MA2YD1700L
R46 10.0K
R47 10.0K
C47 2200pF
U7A TLV2374
R49 100 1/4W
R48 100 1/4W
C17 0.01uF
R11 100K
Q9 NTA4001N
GAIN
R40 10.0K
IR
COMM_IN

Fig. 3D

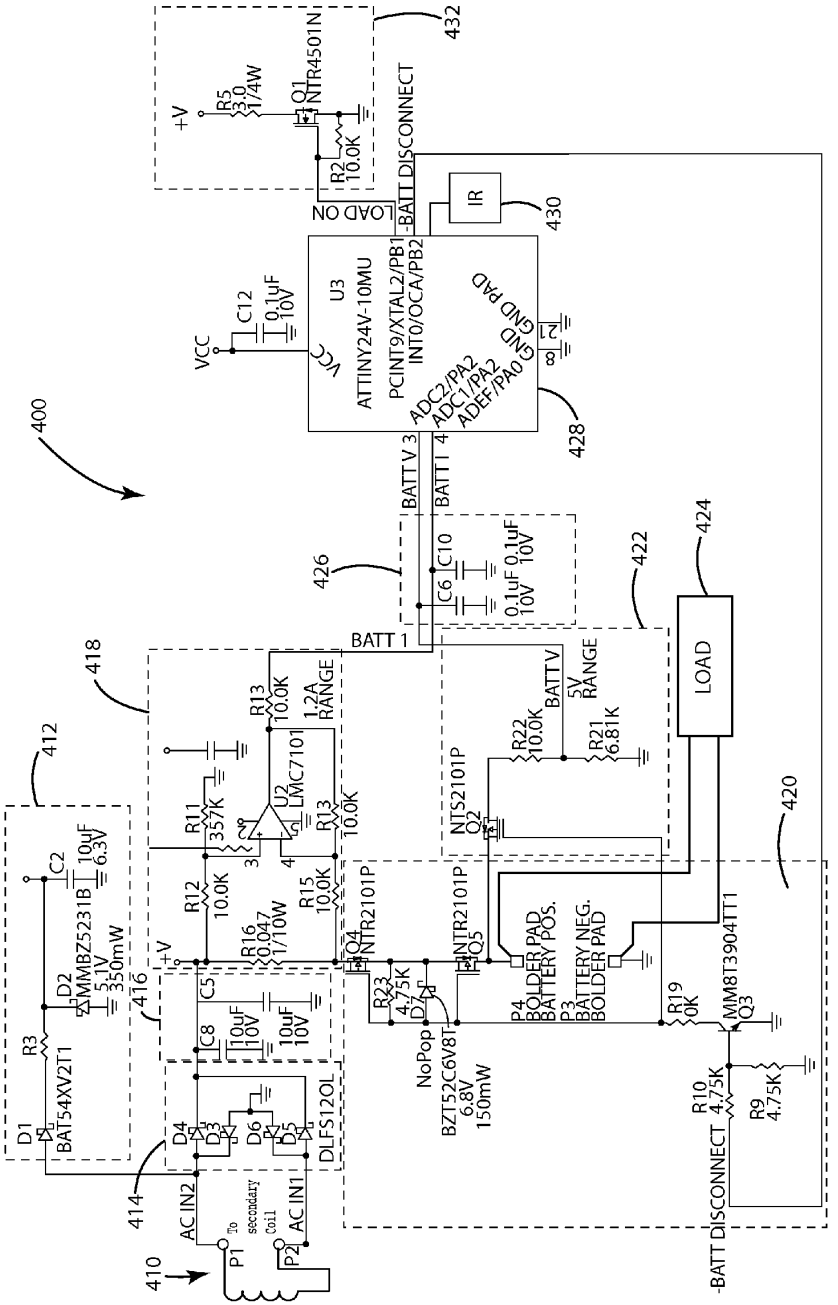
400
410
412
414
416
418
420
422
424
426
428
430
432
D1
BAT54XV2T1
R3
D2
MMBZ5231B
5.1V
350mW
C2
10uF
6.3V
P1
P2
AC IN2
AC IN1
To secondary Coil
D4
D3
D6
D5
DLFS12OL
C8
10uF
10V
C5
10uF
10V
+V
R16
0.047
1/10W
R12
10.0K
R11
357K
U2
LMC7101
R13
10.0K
R13
10.0K
1.2A
RANGE
R15
10.0K
Q4
NTR2101P
R23
4.75K
D7
NoPop
BZT52C6V8T
6.8V
150mW
NTR2101P
Q5
NTS2101P
Q2
R22
10.0K
R21
6.81K
BATT V
5V
RANGE
P4
BOLDER PAD
BATTERY POS.
P3
BATTERY NEG.
BOLDER PAD
R19
0K
MM8T3904TT1
Q3
R10
4.75K
R9
4.75K
-BATT DISCONNECT
LOAD
BATT 1
C6
C10
0.1uF
10V
0.1uF
10V
BATT V 3
BATT 1 4
U3
ATTINY24V-10MU
VCC
C12
0.1uF
10V
PCINT9/XTAL2/PB1
INT0/OCA/PB2
ADC2/PA2
ADC1/PA2
ADEF/PA0
GND
GND PAD
IR
LOAD ON
-BATT DISCONNECT
+V
R5
3.0
1/4W
Q1
NTR4501N
R2
10.0K

Fig. 4

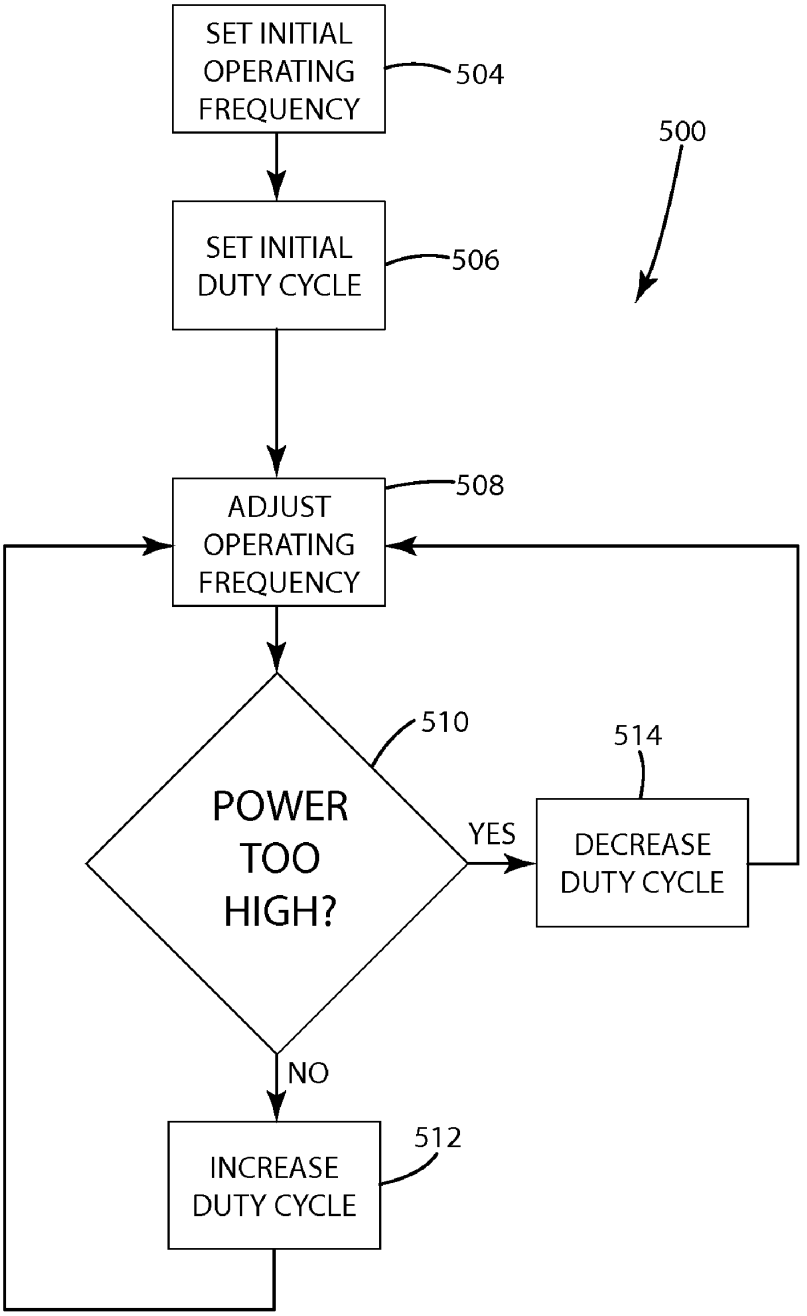
SET INITIAL OPERATING FREQUENCY
504
500
SET INITIAL DUTY CYCLE
506
ADJUST OPERATING FREQUENCY
508
510
514
POWER TOO HIGH?
YES
DECREASE DUTY CYCLE
NO
INCREASE DUTY CYCLE
512

Fig. 5

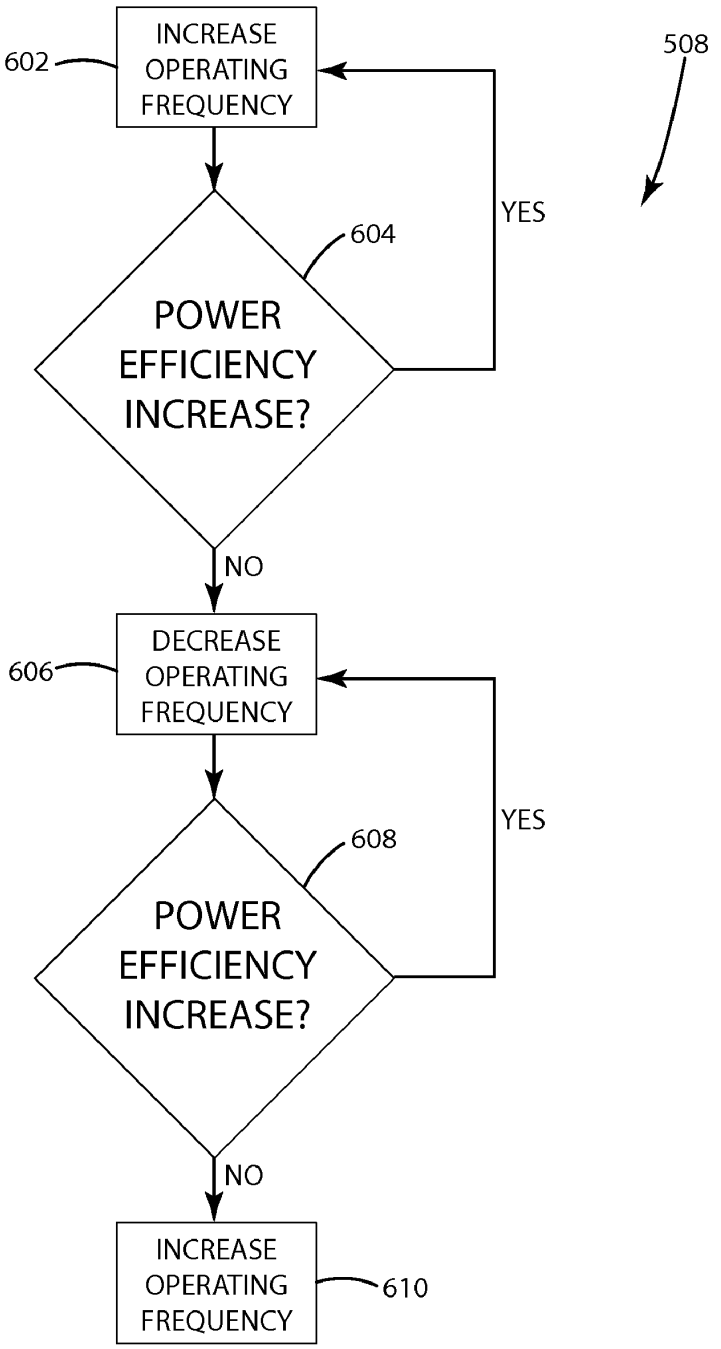
508
602
INCREASE OPERATING FREQUENCY
604
POWER EFFICIENCY INCREASE?
YES
NO
606
DECREASE OPERATING FREQUENCY
608
POWER EFFICIENCY INCREASE?
YES
NO
INCREASE OPERATING FREQUENCY
610

Fig. 6

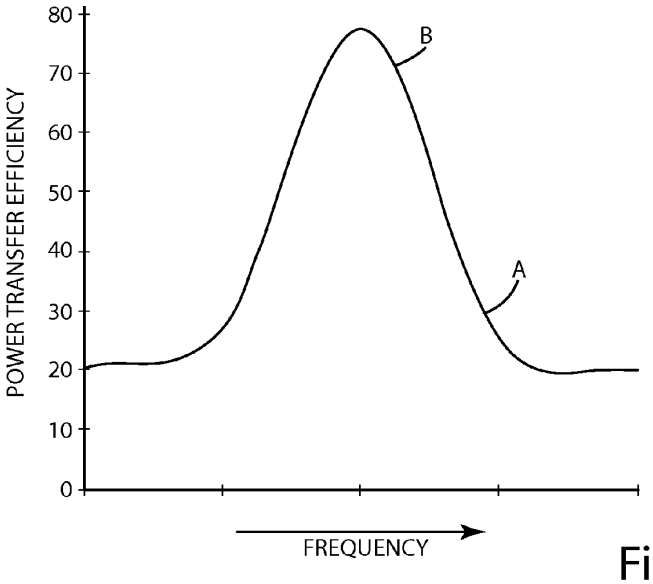
POWER TRANSFER EFFICIENCY
80
70
60
50
40
30
20
10
0
B
A
FREQUENCY

Fig. 7

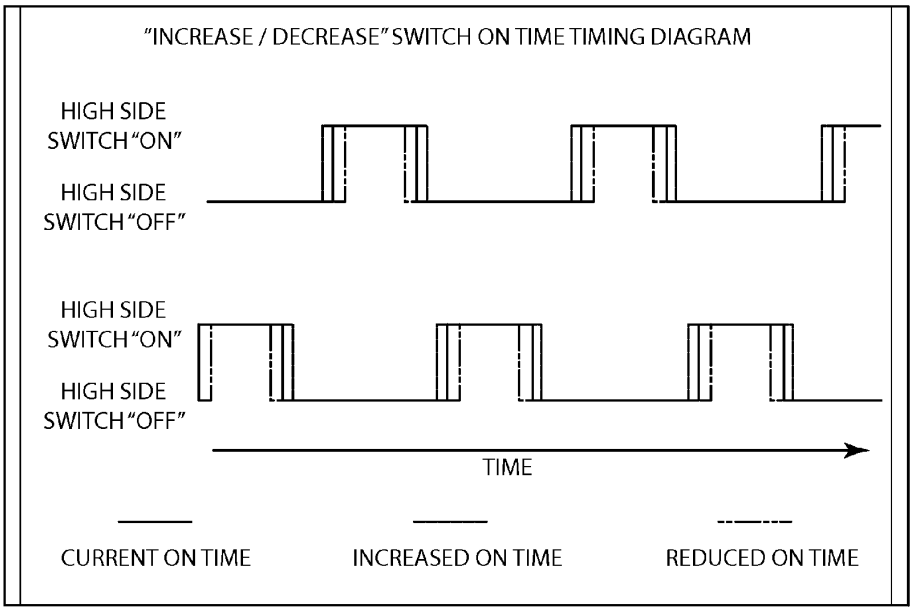
"INCREASE / DECREASE" SWITCH ON TIME TIMING DIAGRAM
HIGH SIDE SWITCH "ON"
HIGH SIDE SWITCH "OFF"
HIGH SIDE SWITCH "ON"
HIGH SIDE SWITCH "OFF"
TIME
CURRENT ON TIME
INCREASED ON TIME
REDUCED ON TIME

Fig. 8

INDUCTIVE POWER SUPPLY WITH DUTY CYCLE CONTROL

[0001] This application claims the benefit of U.S. Provisional Application No. 61/019,411, filed on Jan. 7, 2008.

[0002] The present invention relates to inductive power and more particularly to a system and method for wirelessly supplying power.

BACKGROUND OF THE INVENTION

[0003] In recent years, wireless power supply systems have received increased attention because of some of their benefits over traditional wired power supply systems. Some more basic wireless power supply systems are specifically designed to charge a particular device, which can help minimize power transfer efficiency issues. Other wireless power supply systems attempt to account for misalignment, charge different remote devices and provide different amounts of power. In these systems, maintaining an acceptable power transfer efficiency can be difficult.

[0004] Some wireless power systems adjust the operating frequency of an AC signal across the tank circuit closer to or further from resonance to increase or decrease the amount of power delivered to the remote device. Other wireless power systems adjust the resonant frequency of the tank circuit closer to or further from the operating frequency. One issue with these systems is that the power transfer efficiency between the inductive power supply and the remote device is a function of how close the operating frequency is to resonance. So, while adjusting the operating frequency or resonant frequency can provide some control over the amount of power delivered to the remote device, it may come at the cost of decreased power transfer efficiency.

[0005] Other wireless power supplies use a fixed operating frequency and instead adjust the rail voltage, duty cycle, or phase of the AC signal across the tank circuit to increase or decrease the amount of power delivered to the remote device. One issue with this is that in order for the power transfer efficiency to be acceptable, the inductive power supply and remote device may need to be precisely aligned and specifically designed to work with each other.

SUMMARY OF THE INVENTION

[0006] The present invention provides an inductive power supply that maintains resonance and adjusts duty cycle based on feedback from a secondary circuit. In one embodiment, the inductive power supply includes a primary controller, a driver circuit, a switching circuit, and a tank circuit. The controller, driver circuit and switching circuit cooperate to generate an AC signal at a selected operating frequency and duty cycle. The AC signal is applied to the tank circuit to create an inductive field for powering the secondary. The secondary communicates feedback about the received power back to the primary controller. The power transfer efficiency may be optimized by maintaining the operating frequency substantially at resonance, and the amount of power transferred may be controlled by adjusting the duty cycle.

[0007] In one embodiment, the secondary circuit includes a secondary, a rectifier, a switch, a load, a sensor, a secondary controller, and a communication means. A voltage and/or current sensor detects characteristics about the power which are transmitted back to the primary controller using the communication means. Optionally, over-voltage and over-current protection may be provided. If a fault condition is detected the load is disconnected using the switch.

[0008] In one embodiment, a process for inductively powering a load by maintaining substantial resonance and adjusting duty cycle is provided. Initially an operating frequency and duty cycle are set to an acceptable value. The initial operating frequency is determined by sweeping a range of frequencies and selecting the operating frequency which provided the highest power transfer efficiency. The initial duty cycle is set to a relatively low value, such as 20%, to ensure that too much power is not delivered to the secondary. Once the initial values have been set, the inductive power supply enters a continuous process of adjusting the operating frequency to maintain substantial resonance and adjusting the duty cycle depending on whether the amount of power is too high or too low or temperature is too high.

[0009] The present invention provides a simple and effective system and method for providing a selected amount of wireless power while maintaining a high transfer efficiency. Adjustment of duty cycle provides another level of control of wireless power transfer, one which can be used to fine tune the amount of power provided to a secondary. Additionally, the ability to adjust the amount of power being transferred while maintaining substantial resonance results in fewer overall losses and easier fulfillment of specified power requirements.

[0010] These and other objects, advantages, and features of the invention will be readily understood and appreciated by reference to the detailed description of the current embodiment and the drawings.

BRIEF DESCRIPTION OF THE DRAWINGS

[0011] FIG. **1** is a block diagram of an inductive power supply.

[0012] FIG. **2** is a block diagram of a secondary circuit.

[0013] FIGS. **3**A-**3**D together are a circuit diagram of an inductive power supply.

[0014] FIG. **4** is a circuit diagram of a secondary circuit.

[0015] FIG. **5** is a flowchart of a process to maintain resonance and adjust duty cycle.

[0016] FIG. **6** is a flowchart of a process to adjust the operating frequency to maintain resonance.

[0017] FIG. **7** is an exemplary graph showing frequency versus power transfer efficiency.

[0018] FIG. **8** is a timing diagram showing a varying duty cycle.

DESCRIPTION OF THE CURRENT EMBODIMENT

I. Overview

[0019] An inductive power supply or primary circuit in accordance with an embodiment of the present invention is shown in FIG. **1**, and generally designated **100**. The primary circuit **100** includes a primary controller **110**, a driver circuit **111** including a pair of drivers **112**, **114**, a switching circuit **115** including a pair of switches **116**, **118**, a tank circuit **120** a primary sensor **122** and an optional wireless receiver **124**. The primary controller **110**, driver circuit **111** and the switching circuit **115** together generate an AC signal at a selected frequency and selected duty cycle that is applied to the tank circuit **120** to create an inductive field for transferring power wirelessly to a secondary circuit. A secondary circuit in accordance with an embodiment of the present invention is

shown in FIG. **2**, and generally designated **200**. The secondary circuit **200** may include a secondary **210**, a rectifier **212**, a switch **214**, a load **216**, a current sensor **218** or voltage sensor **220**, a secondary controller **222**, a signal resistor **224** for communicating using reflected impedance and an optional wireless transmitter **226**.

[0020] In operation, an embodiment of the process for adjusting the duty cycle is shown in FIG. **5**, the initial operating frequency is set substantially at resonant frequency **504** and the initial duty cycle is set at a relatively low value **506**. The primary controller continuously adjusts the operating frequency **508** to maintain substantially resonant frequency and continuously determines if the amount of power being transferred is too high **510**. If too much power is being provided or temperatures are above a preset threshold then the duty cycle is decreased **514**. If too little power is being provided then the duty cycle is increased **512**. Various conditions may temporarily or permanently reduce or halt the power transfer.

II. Inductive Power Supply

[0021] The present invention is suitable for use with a wide variety of inductive power supplies. As used herein, the term "inductive power supply" is intended to broadly include any inductive power supply capable of providing power wirelessly. The present invention is also suitable for use with "adaptive inductive power supplies." As used herein, the term "adaptive inductive power supply" is intended to broadly include any inductive power supply capable of providing power wirelessly at a plurality of different frequencies. For purposes of disclosure, the present invention is described in connection with a particular adaptive inductive power supply, shown in FIGS. **3**A-**3**D and generally designated **300**. The illustrated adaptive inductive power supply **300** is merely exemplary, however, and the present invention may be implemented with essentially any inductive power supply that can be modified to provide inductive power at varying duty cycles.

[0022] In the illustrated embodiment, the adaptive inductive power supply **300** generally includes a primary controller **310**, a low voltage power supply **312**, memory **314**, a driver circuit **316**, a switching circuit **318** a tank circuit **320**, a current sensor **322**, a filter **324** and optionally a wireless receiver **326**. In operation, the primary controller **310**, driver circuit **316** and switching circuit **318** apply power to the tank circuit **320** to generate a source of electromagnetic inductive power at a selected frequency and a selected duty cycle.

[0023] The primary controller **310** of the illustrated embodiment includes two microcontrollers, one to control the frequency and one to control the duty cycle. The frequency microcontroller may be a microcontroller, such as a PIC24FJ32GA002, or a more general purpose microprocessor. The duty cycle microcontroller may be a microcontroller, such as a dsPIC30F2020, or a more general purpose microprocessor. In alternative embodiments, the primary controller **310** may be implemented using a single microcomputer, FPGA, analog or digital circuit. The driver circuit **316** may be discrete components, as shown in FIG. **3**D [[**3**B]], or they may be incorporated into the primary controller **310**. An oscillator (not shown) may be included within the primary controller **310**.

[0024] The primary circuit **300** may also include a low voltage power supply **312** for supplying low voltage power to the primary controller **310**, the driver circuit as well as any other components requiring low voltage power for operation. In the illustrated embodiment the low voltage power supply **312** provides scales the input voltage to 3.3 volts. In alternative embodiments, a different voltage may be provided.

[0025] In the current embodiment, the various components of the primary circuit **310** collectively drive the tank circuit **320** at a frequency and duty cycle dictated by the primary controller **310**. More specifically, the primary controller **310** controls the timing of the driver circuit **316** and switching circuit **318**. The timing refers to both the frequency and duty cycle of the signal being generated. Frequency as it is being used here refers to the number of repetitions per unit time of a complete waveform. Duty cycle refers to the proportion of time during which the waveform is high compared to the total amount of time for a complete waveform. Thus, a square wave as shown in FIG. **8**, may be described by its frequency and its duty cycle. Further, the duty cycle may be adjusted while maintaining the same frequency and the frequency may be adjusted while maintaining the same duty cycle. The driver circuit **316** of the illustrated embodiment includes two separate drivers and may include additional circuit components to boost and filter the signal. For example, in the current embodiment, the signal is boosted to 20 volts, without effecting the timing of the signal.

[0026] The switching circuit **318** includes two switches. In the current embodiment, the switches are implemented as MOS field effect transistors. In alternative embodiments, other circuit components may be used to implement the switching circuit. Additionally, depending on power requirements MOSFETs with different characteristics may be implemented during manufacture. In some embodiments, multiple sets of switches may be provided on the circuit board, allowing one set of switches to be soldered at the time of manufacture based on the particular power requirements of that application.

[0027] In one embodiment, the switching circuit **115** includes two separate switches **116**, **118** that are switched on at the same frequency, but out of phase with each other. FIG. **8** illustrates the timing for one embodiment of such a switching circuit. In FIG. **8**, both switches have the same duty cycle, but are shifted in time from each other by half of the period of the switching waveform. In alternative embodiments, each switch may have a different duty cycle and they the switches may be shifted in time a different amount from each other. That is, half period separation and similar duty cycle are desirable, but unnecessary, for the switches because it may result in increased power transfer efficiency from the inductive power supply to the remote device.

[0028] The tank circuit **320** generally includes the primary and a capacitor. The primary of the current embodiment is an air-core coil inductor. A cored inductor can also be used if the proper considerations are made for spatial freedom, monitoring overall power, and feedback. The capacitance of the capacitor may be selected to balance the impedance of the primary coil at anticipated operating parameters. In the current embodiment, although three tank capacitors are shown, all three capacitors need not necessarily be soldered into the circuit at the time of manufacture. An inductive power supply may be fabricated which at the time of soldering can have an appropriate capacitance value selected by soldering or switching different capacitors into the circuit. The tank circuit **320** may be either a series resonant tank circuit (as shown in FIG. **3**D) or a parallel resonant tank circuit (not shown). The present invention may be incorporated into the adaptive

inductive power supply shown in U.S. Pat. No. 6,825,620, which is incorporated herein by reference. As another example, the present invention may be incorporated into the adaptive inductive power supply shown in U.S. Patent Application Publication US2004/130916A1 to Baarman, which is entitled "Adapted Inductive Power Supply" and was published on Jul. 8, 2004 (U.S. Ser. No. 10/689,499, filed on Oct. 20, 2003), which is also incorporated herein by reference. Further, it may be desirable to use the present invention in connection with an adaptive inductive power supply capable of establishing wireless communications with the remote device, such as the adaptive inductive power supply shown in U.S. Patent Application Publication US 2004/130915A1 to Baarman, which is entitled "Adapted Inductive Power Supply with Communication" and was published on Jul. 8, 2004 (U.S. Ser. No. 10/689,148, filed on Oct. 20, 2003), which is incorporated herein by reference. Further yet, it may be desirable to use the present invention with a printed circuit board coil, such as a printed circuit board coil incorporating the invention principles of U.S. Ser. No. 60/975,953, which is entitled "Printed Circuit Board Coil" and filed on Sep. 28, 2007 by Baarman et al, and which is incorporated herein by reference in its entirety. In other alternative embodiments, the inductor may be implemented as a multi-tap inductor and/or the capacitors may be implemented as a switched capacitor bank that may be used to dynamically, before or during use, alter the resonance of the primary circuit, for example, as described in U.S. Pat. No. 7,212,414, which is entitled "Adaptive Inductive Power Supply" and issued May 1, 2007, to Baarman, which is herein incorporated by reference.

[0029] In certain modes of operation, the primary controller **310** may establish the operating frequency as a function of input from the current sensor **322**. The controller **310**, in turn, operates the driver circuit **318** at the frequency established by the primary controller **310**. The driver circuit **316** provides the signals necessary to operate the switching circuit **318**. As a result, the switching circuit **318** provides AC (alternating current) power to the tank circuit **320** from a source of DC (direct current) power. In an alternative embodiment, the operating frequency is established from a separate communication link, such as the wireless receiver **326**, implemented in the current embodiment as an IR receiver.

[0030] The primary controller **310** may also establish the duty cycle as a function of input from the current sensor **322**. Planned shunting of the signal resistor on the secondary, which will be described in more detail below, may be used to provide information to the primary using reflected impedance detected with the current sensor **322**. Alternatively, the duty cycle may be established using a separate communication link, such as the wireless receiver **326**, implemented in the current embodiment as an IR receiver. This could also be near field or other RF communication channels.

[0031] In the illustrated embodiment, the current sensor **322** is a current transformer having a primary coil connected to the tank circuit and a secondary coil connected to the primary controller **310**. In the current embodiment, the current sensor **322** includes circuitry to adjust the gain of the output of the current sensor to accommodate the ranges accepted by the primary controller **310**. Further, the amount of gain may be adjusted by the primary controller **310** by applying a signal to the switch. The inductive power supply **300** may include conditioning circuitry **324** for conditioning the current transformer output before it is supplied to the primary controller **310**. In the current embodiment, the conditioning circuitry **324** is a 5 K Hz 2-pole filter. Although the illustrated embodiment includes a current transformer for sensing the reflected impedance of the secondary or remote device, the inductive power supply **300** may include essentially any alternative type of sensor capable of providing information regarding reflected impedance from the secondary **400**. Further, although the current sensor **322** of the illustrated embodiment is connected directly to the tank circuit, the current sensor (or other reflected impedance sensor) can be located in essentially any location where it is capable of providing readings indicative of the reflected impedance.

[0032] In the illustrated embodiment, the inductive power supply **300** further includes a memory **314** capable of storing information relating to the operating parameters of a plurality of secondaries **400**. The stored information may be used to permit the inductive power supply **300** to more efficiently power the secondary **400** and more readily recognize fault conditions. In some applications, the inductive power supply **300** may be intended for use with a specific set of secondaries **400**. In these applications, the memory **314** includes the unique resonant frequency (or pattern of frequencies) for each secondary **400**, along with the desired collection of associated information, such as maximum and minimum operating frequencies, current usage and minimum and maximum duty cycle. The memory **314** may, however, include essentially any information that may be useful to the inductive power supply **300** in operating the secondary **400**. For example, in applications where it is desirable to establish wireless communications with the secondary **400**, the memory **314** may include information regarding the wireless communication protocol of the remote device **400**.

III. Secondary Circuit

[0033] The present invention is intended for use with a wide variety of remote devices or secondaries of varying designs and constructions. It is anticipated that these various remote devices will require power at varying frequency and will have different power requirements.

[0034] For purposes of disclosure, one embodiment of a secondary circuit **400** is shown in FIG. **4**. In the embodiment of FIG. **4**, the secondary circuit **400** generally includes a secondary **410** for receiving power from the inductive power supply **300**, a rectifier **414** (or other components for converting AC power to DC), a low voltage power supply **412** that scales the received power to operate the secondary controller **428**, conditioning circuitry **416**, **426** to remove ripple in the signal, current sensor **418**, voltage sensor **422**, switch **420**, load **424**, secondary controller **428**, a signal resistor **432** and an optional wireless transmitter **430**. In operation, the rectifier **414** converts the AC power generated in the secondary **410** to DC power, which is typically needed to power the load. Alternatively, multiple secondary coils receiving power on different phases can be used to reduce the ripple voltage. This is referenced in Application Ser. No. 60/976,137, entitled Multiphase Inductive Power Supply System to Baarman et al, which is herein incorporated by reference. Multiple primary coils may be desired to transmit power on different phases in such an embodiment. In one embodiment, the load is a charging circuit (not shown) for a battery. Charging circuits are well-known and are widely used with a variety of rechargeable electronic devices. If desired, the charging circuit may be configured to both charge a battery (not shown) and/or power

the load **424**. In alternative embodiments the rectifier may be unnecessary and AC power may be conditioned to be used to power the load.

[0035] The current sensor **418** detects the amount of current in the received power and provides that information to the secondary controller **428**. The voltage sensor **422** detects the amount of voltage in the received power and provides that information to the secondary controller **428**. Although the illustrated embodiment includes both a voltage sensor **422** and a current sensor **418**, only one is necessary. By sensing the voltage and/or current in the secondary circuit and knowing the voltage and/or current provided by the primary circuit, the primary controller can calculate the power transfer efficiency. By sweeping a range of operating frequencies, noting the power transfer efficiency at each frequency, the operating frequency closest to resonance can be determined—it corresponds with the operating frequency that yields the best power transfer efficiency. In addition, the voltage and current sensors **418**, **422** can be used in conjunction with a protection algorithm in the secondary controller **428** to disconnect the load **424** if a fault condition is detected. This concept is described in more detail in U.S. patent application Ser. No. 11/855,710 entitled System and Method for Inductively Charging a Battery to Baarman et al, which was previously incorporated by reference.

[0036] The secondary controller **428** may be essentially any type of microcontroller. In the illustrated embodiment, the secondary controller **428** is an ATTINY24V-10MU microcontroller. The secondary controller **428** generally includes an analog to digital converter, and is programmed to process the voltage and/or current readings and transmit them to the primary controller **310** of the inductive power supply **300**. The microprocessor may also include other code unrelated to the frequency or duty cycle control processes.

[0037] Communication of the sensed voltage and/or current in the secondary may be transmitted to the primary controller **310** in a variety of ways. In the illustrated embodiment, the information may be transmitted using the signal resistor **432** or the wireless transmitter **430**.

[0038] In one embodiment, signal resistor **432** may be used to send information to the primary controller **310**. The use of a signal resistor **432** to provide communication from the secondary to the primary was discussed in U.S. patent application Ser. No. 11/855,710 entitled System and Method for Inductively Charging a Battery to Baarman et al, which is herein incorporated by reference. The signal resistor **432**, when shunted, sends a communication signal that signifies an over-current or over-voltage state. When the resistor is shunted, the peak detector on the primary circuit is able to sense the over-voltage/over-current condition and act accordingly. The signal resistor **432** of the present invention may be shunted systematically to communicate additional data to the primary controller **310**. For example, a stream of data could represent the sensed current and/or sensed voltage. Alternatively, the signal resistor could be used solely in the previously described way as an over-voltage/over-current transmitter or it could be removed entirely.

[0039] Use of a wireless transmitter or transceiver was previously described in U.S. Patent Application Publication US 2004/130915A1 to Baarman, which is entitled "Adapted Inductive Power Supply with Communication" that was previously incorporated by reference. Specifically, the use of WIFI, infrared, blue tooth, cellular or RFID were previously discussed as ways to wirelessly transmit data from a remote device to an inductive power supply. Further, communication using the induction coils and a power line communication protocol was discussed. Any of these methods of transmitting data could be implemented in the present invention in order to transfer the desired data from the secondary to the primary.

IV. Operation

[0040] General operation of the primary circuit **100** and secondary circuit **200** is described in connection with FIG. **5**.

[0041] In this embodiment, the primary circuit determines and sets the initial operating frequency **504**. Typically, the goal of setting the initial operating frequency is to set it as close to the resonant frequency as possible, which varies depending on many different factors including, among other things, the orientation and distance between the primary circuit and secondary circuit. In the current embodiment, a simple frequency sweep is used to determine where to set the initial operation frequency. Specifically, in this embodiment, the range of valid frequencies is swept and the power transfer efficiency at each frequency is noted. The step between frequencies may vary, but in the current embodiment, the frequency is swept between 70 k Hz and 250 k Hz at steps of 100 Hz. Once the entire range of frequencies has been swept, the operating frequency that yielded the highest power transfer efficiency is selected as the initial operating frequency. The operating frequency that yielded the highest power transfer efficiency indicates that it is the closest frequency to resonance. Further steps at a finer frequency resolution can facilitate even further tuning. Other methods for determining the initial operating frequency may be used in alternative embodiments. For example, an initial operating frequency may be selected based on known primary and secondary component. Further, modifications to the sweeping process may include dynamic step adjustment proportional to the power transfer efficiency. In yet another alternative embodiment, the sweep may be performed dynamically so that only the power transfer efficiency value for the current frequency and the frequency with the highest power transfer efficiency are stored. As the sweep progresses, each value is checked against the highest stored value and replaces it only if it is higher.

[0042] In the embodiment described in FIG. **5**, the primary circuit sets the initial duty cycle **506**. The duty cycle corresponds with the amount of power transferred with each cycle. The higher the duty cycle, the more power transferred per cycle. In the current embodiment, the initial duty cycle is set at 20%, which is considered low enough to not risk overpowering the remote device, but is high enough such that enough power is transferred to power the secondary circuitry. In alternative embodiments a different initial duty cycle may be set based on the application or any number of other factors.

[0043] The adjust operating frequency step **508** is a multistep process which ensures that the operating frequency is being maintained substantially at resonance. FIG. **6** describes one embodiment of this process in more detail. In the described embodiment, the operating frequency is increased by a pre-selected amount, referred to as a step up. The adjustment is allowed to propagate through the system and the power efficiency is checked **604**. If the power efficiency increased then the system was not substantially at resonance and the operating frequency is stepped up again. This process continues until the power efficiency either decreases or stays the same. Once that occurs, the operating frequency is stepped down **608**. The power efficiency is checked **608**. If the

power efficiency increases then the operating frequency is stepped down again, until the power efficiency stays the same or decreases. The final step is to step up the operating frequency **610** to get back to the operating frequency with the peak power efficiency. This is merely one embodiment of a process to maintain the operating frequency substantially at resonance. Any other process could be used to maintain the operating frequency substantially at resonance.

[0044] One reason that the operating frequency is stepped up and stepped down can be explained by looking at an exemplary graph of operating frequency vs. power efficiency, shown in FIG. **7**. As can be seen, there are several peaks of power efficiency over the range of operating frequencies shown. The initial sweep of frequencies sets the operating frequency to the resonant frequency, i.e. the highest peak on FIG. **7**. Each time the adjustment comes, although the operating frequency has not changed, the power efficiency values may have changed as a result in any number of factors, most notably movement of the secondary. Typically, the change in the graph is merely a slight shift, meaning that the optimum operating frequency may be a few steps in either direction. This is why the current embodiment steps up and steps down. If the first step up leads to a decrease in power efficiency transfer, the process immediately steps down until. If stepping down also leads to a decrease in power efficiency transfer then it is evident that no adjustment is necessary and the operating frequency was already at resonant frequency. In an alternative embodiment an analog circuit could be used to directly determine how far off resonance the system is, causing the controller to react directly to the proper frequency. A phase comparator is one such circuit.

[0045] In the current embodiment, the operating frequency is adjusted with each iteration, however, in alternative embodiments, the operating frequency may be adjusted less frequently or only when an event triggers that it should be adjusted. For example, if a motion detector on the secondary indicates movement or a change in orientation of the secondary. Or, for example, if there is a sharp decrease or increase in the amount of power provided to the secondary.

[0046] The next step is to determine if the amount of power being received by the secondary is too high **510**. If the amount of power being received is too high then the duty cycle of the power being transferred is reduced **514**. If the amount of power being received is not too high then the duty cycle of the power being transferred is increased **512**. In the current embodiment, the duty cycle should not exceed approximately 49% in order to reduce the risk of causing a short circuit. In the current embodiment, after the duty cycle is adjusted, up or down, the operating frequency is re-adjusted **508**. As explained above, duty cycle refers to the "switch on time" or the proportion of time during which the waveform is high compared to the total amount of time for a complete waveform. An exemplary graph illustrating a signal with a varying duty cycle is shown in FIG. **8**. The graph depicts a graph of time vs. current. The solid line represents the waveform generated by the primary circuit with the current duty cycle. The dashed line represents what a waveform would look like with an increased duty cycle. The dash-dotted line represents what a waveform would look like with a decreased duty cycle. Note that because the duty cycle is being increased symmetrically and decreased symmetrically, the frequency of the waveform does not change with the adjustment in duty cycle. It is worth noting that in some embodiments, during operation, the frequency may not be adjusted, while duty cycle adjustments continue to take place.

[0047] Duty cycle may be stepped up or down by a preselected amount. In the current embodiment, the step up and step down amounts are static and equal. However, in alternative embodiments, the step amounts may be dynamic and different. For example, in battery charging applications it may be beneficial to decrease duty cycle in large steps and increase duty cycle in small steps. Various batteries require different charging algorithms and the duty cycle control may be used to provide the correct battery charging profile. In another example, the duty cycle may be stepped up or down proportional to the amount of power demanded by the secondary. The amount of power demanded by the secondary can be determined by reading the current and/or voltage sensor. Where there is a small change in the readings, a small change in duty cycle may be implemented and where there is a large change in the readings, a large change in duty cycle may be implemented.

[0048] In one embodiment, there are built-in delays between the changes in operating frequency and changes in duty cycle. These delays can account for any phase issues that may arise because of the speed at which the operating frequency or duty cycle is being changed.

[0049] This process continues as desired or until the power supply is turned off, the secondary is removed, or in the case of charging a battery, when the battery is fully charged.

[0050] The primary circuit may adjust the duty cycle depending on the demands of the secondary. For example, in one embodiment, one goal may be to maintain a certain amount of voltage or current in the secondary. Using feedback from the secondary, such as the sensed voltage and/or current, the operating frequency may be adjusted to ensure optimum power transfer efficiency by ensuring operation at substantially resonant frequency and the duty cycle may be adjusted to provide additional or less power to meet the desired goal.

[0051] The above description is that of the current embodiment of the invention. Various alterations and changes can be made without departing from the spirit and broader aspects of the invention.

The embodiments of the invention in which an exclusive property or privilege is claimed are defined as follows:

1. An inductive power supply for providing power wirelessly to a remote device, said inductive power supply comprising:

a primary circuit for generating a signal at an operating frequency and a duty cycle;

a tank circuit in electrical communication with said primary circuit, wherein said primary circuit applies said signal to said tank circuit to transfer an amount of power to said remote device;

wherein said inductive power supply receives feedback from said remote device;

wherein, in response to said feedback, said primary circuit controls said operating frequency of said signal to optimize power transfer efficiency between said inductive power supply and said remote device; and

wherein, in response to said feedback, said primary circuit controls said duty cycle of said signal to control said amount of power transferred to said remote device.

2. The inductive power supply of claim **1** wherein said primary circuit maintains said operating frequency of said signal substantially at resonance.

3. The inductive power supply of claim **1** wherein said primary circuit continuously adjusts said operating frequency to maintain substantial resonance and continuously adjusts said duty cycle based on a comparison between said amount of power transferred to said remote device and a threshold.

4. The inductive power supply of claim **1** wherein said primary circuit controls said duty cycle of said signal according to at least one of a battery charging profile and a demand by said remote device.

5. The inductive power supply of claim **1** wherein said primary circuit includes:

a primary controller;

a driver circuit in electrical communication with said primary controller;

a switching circuit in electrical communication with said driver circuit; and

a sensor for sensing reflected impedance of said remote device, wherein said sensor is in electrical communication with said tank circuit and said primary controller.

6. The inductive power supply of claim **5** wherein said switching circuit includes a pair of switches,

wherein each switch is switched on at said duty cycle and at said operating frequency, but out of phase with each other; and

wherein, in response to said feedback, said primary controller controls said operating frequency of each of said switches; and

wherein, in response to said feedback, said primary controller controls said duty cycle of each of said switches.

7. The inductive power supply of claim **5** wherein said primary controller adjusts said operating frequency of said signal as a function of input from said sensor.

8. The inductive power supply of claim **1** wherein said primary circuit includes a wireless receiver for receiving said feedback from said remote device.

9. An inductive power supply system comprising:

an inductive power supply including:

a primary circuit for generating a signal at an operating frequency and a duty cycle; and

a tank circuit in electrical communication with said primary circuit, wherein said primary circuit applies said signal to said tank circuit to transfer an amount of power to said remote device;

a remote device separable from said inductive power supply for receiving power from said inductive power supply, said remote device including:

a secondary energized by said inductive field,

a load in electrical communication with said secondary,

a sensor in electrical communication with said secondary,

a secondary controller in electrical communication with said sensor, and

a communication device in electrical communication with said secondary controller for sending feedback to said inductive power supply;

wherein, in response to said feedback, said primary circuit controls said operating frequency of said signal to optimize power transfer efficiency between said inductive power supply and said remote device; and

wherein, in response to said feedback, said primary circuit controls said duty cycle of said signal to control said amount of power transferred to said remote device.

10. The inductive power supply system of claim **9** wherein said primary circuit maintains said operating frequency of said signal substantially at resonance.

11. The inductive power supply system of claim **9** wherein said primary circuit continuously adjusts said operating frequency to maintain substantial resonance and continuously adjusts said duty cycle based on a comparison between said amount of power transferred to said remote device and a threshold.

12. The inductive power supply system of claim **9** wherein said primary circuit controls said duty cycle of said signal according to at least one of a battery charging profile and a demand communicated to said inductive power supply by said remote device.

13. The inductive power supply system of claim **9** wherein said primary circuit includes:

a primary controller;

a driver circuit in electrical communication with said primary controller;

a switching circuit in electrical communication with said driver circuit; and

a sensor for sensing reflected impedance of said remote device, wherein said sensor is in electrical communication with said tank circuit and said primary controller.

14. The inductive power supply system of claim **13** wherein said switching circuit includes a pair of switches,

wherein each switch is switched at said duty cycle and at said operating frequency, but out of phase with each other; and

wherein, in response to said feedback, said primary controller controls said operating frequency of each of said switches; and

wherein, in response to said feedback, said primary controller controls said duty cycle of each of said switches.

15. The inductive power supply system of claim **13** wherein said primary controller adjusts said operating frequency of said signal as a function of input from said sensor.

16. The inductive power supply system of claim **9** wherein said primary circuit includes a wireless receiver and said remote device includes a wireless transmitter, wherein said wireless receiver receives said feedback from said wireless transmitter.

17. A method for transferring power from an inductive power supply to a remote device, said method comprising:

setting an initial operating frequency of a signal in said inductive power supply;

setting an initial duty cycle of said signal in said inductive power supply;

applying said signal to a tank circuit for transferring an amount of power from said inductive power supply to a remote device;

receiving, in said inductive power supply, feedback from said remote device;

adjusting, in response to said feedback, said operating frequency of said signal to optimize power transfer efficiency between said inductive power supply and said remote device;

adjusting, in response to said feedback, said duty cycle of said signal to control said amount of power transferred to said remote device.

18. The method for transferring power of claim **17** wherein said adjusting said duty cycle includes:

decreasing said duty cycle of said signal in response to a determination that said power transferred to said remote device is above a threshold; and

increasing said duty cycle of said signal in response to a determination that said power transferred to said remote device is below a threshold.

19. The method for transferring power of claim **17** wherein at least one of said setting an initial operating frequency and adjusting said operating frequency includes sweeping a frequency range, determining an amount of power transferred to said remote device for each operating frequency, and selecting an operating frequency where said amount of power transferred to said remote device is relatively high compared to other frequencies within said frequency range.

20. The method for transferring power of claim **17** wherein at least one of said setting an initial operating frequency and adjusting said operating frequency includes sweeping a frequency range and selecting said operating frequency closest to resonance.

21. The method for transferring power of claim **17** wherein said adjusting of said operating frequency includes continuously adjusting said operating frequency to maintain substantial resonance and said adjusting of said duty cycle includes continuously adjusting said duty cycle based on a comparison between said amount of power transferred to said remote device and a threshold.

22. The method for transferring power of claim **17** wherein said adjusting said duty cycle includes adjusting said duty cycle according to at least one of a battery charging profile and a demand by said remote device.

* * * * *