US 20070279002A1

(19) United States

(12) Patent Application Publication

(10) Pub. No.: US 2007/0279002 A1

(43) Pub. Date: Dec. 6, 2007

PARTOVI

(54) POWER SOURCE, CHARGING SYSTEM, AND INDUCTIVE RECEIVER FOR MOBILE DEVICES

(76) Inventor: AFSHIN PARTOVI, SUNNYVALE, CA (US)

Correspondence Address:
FLIESLER MEYER LLP
650 CALIFORNIA STREET, 14TH FLOOR
SAN FRANCISCO, CA 94108

(21) Appl. No.: 11/757,067

(22) Filed: Jun. 1, 2007

Related U.S. Application Data

(60) Provisional application No. 60/810,262, filed on Jun. 1, 2006, provisional application No. 60/810,298, filed on Jun. 1, 2006, provisional application No. 60/868,674, filed on Dec. 5, 2006.

Publication Classification

(51) Int. Cl.
H02J 7/00 (2006.01)

(52) U.S. Cl. 320/115

(57) ABSTRACT

A power source, charging system, and inductive receiver for mobile devices. A pad or similar base unit comprises a primary, which creates a magnetic field by applying an alternating current to a winding, coil, or any type of current carrying wire. A receiver comprises a means for receiving the energy from the alternating magnetic field and transferring it to a mobile or other device. The receiver can also comprise electronic components or logic to set the voltage and current to the appropriate levels required by the mobile device, or to communicate information or data to and from the pad. The system may also incorporate efficiency measures that improve the efficiency of power transfer between the charger and receiver.

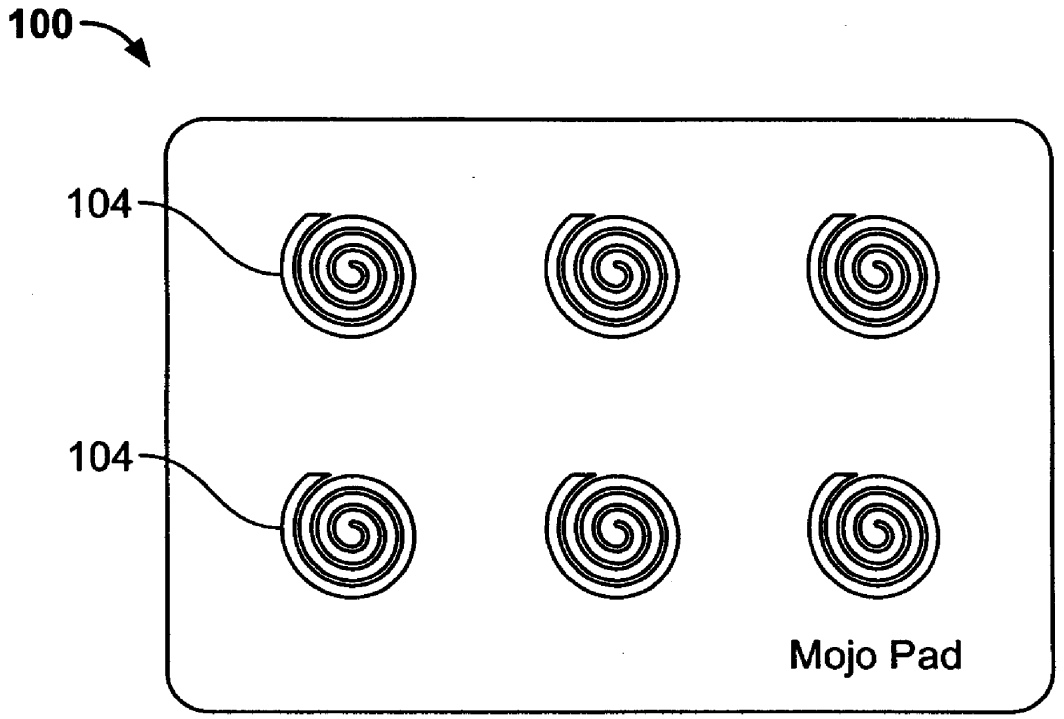

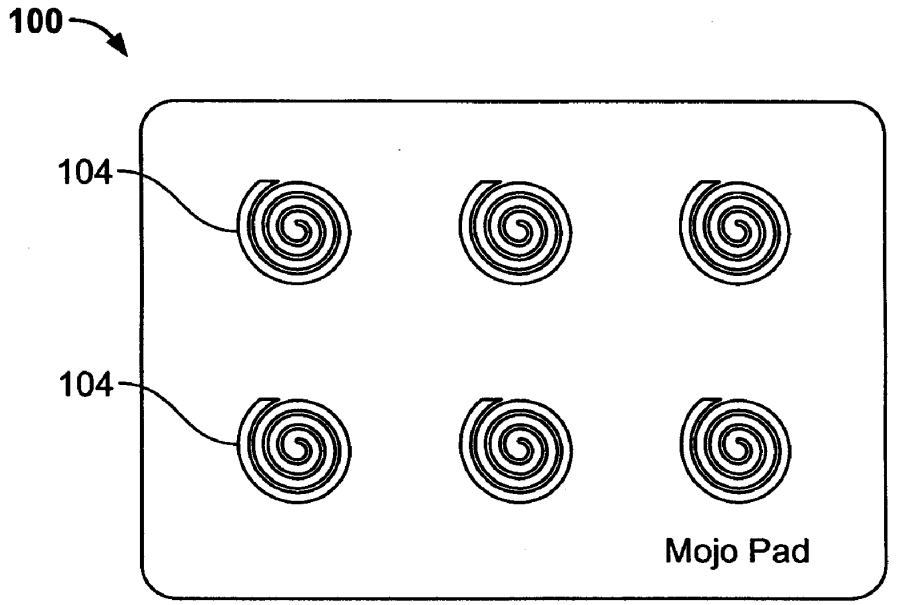
100
104
104
Mojo Pad

FIG. 1

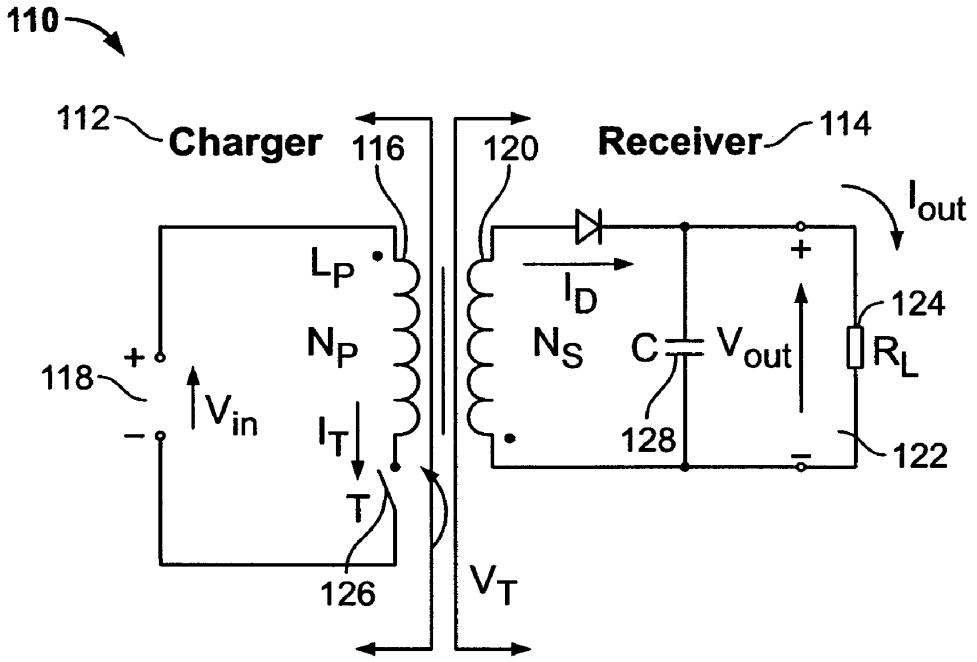
110
112
Charger
116
120
Receiver
114
I_{out}
L_P
I_D
124
N_P
N_S
C
V_{out}
R_L
118
+
−
V_{in}
I_T
128
122
T
126
V_T

FIG. 2

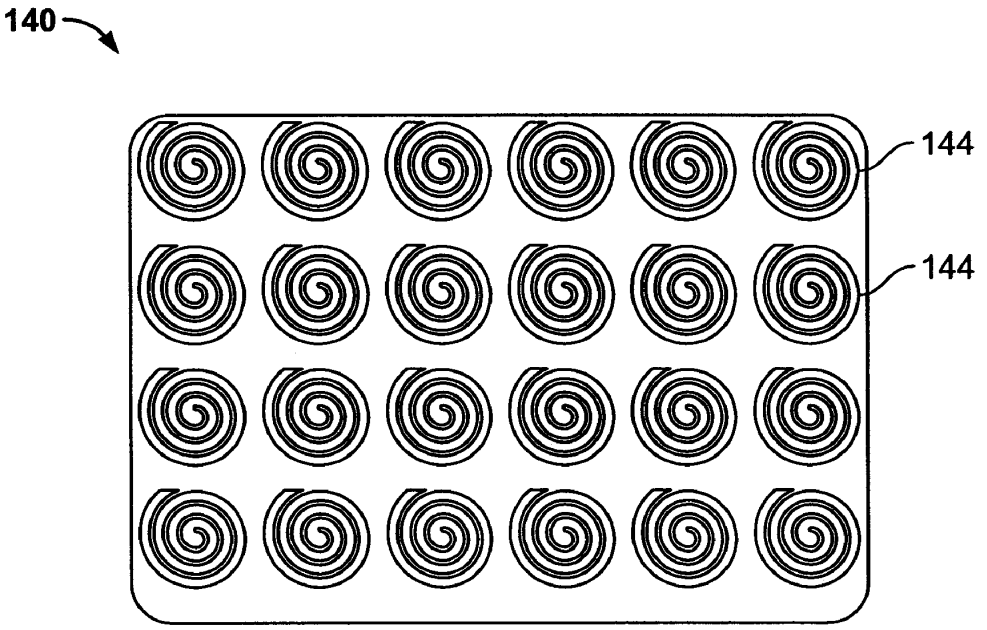

FIG. 3

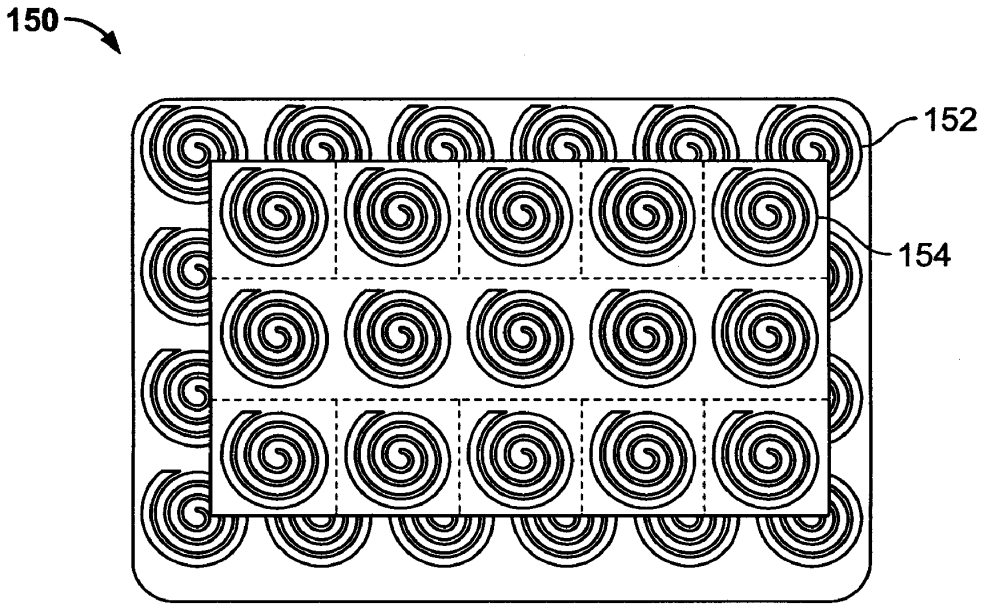

FIG. 4

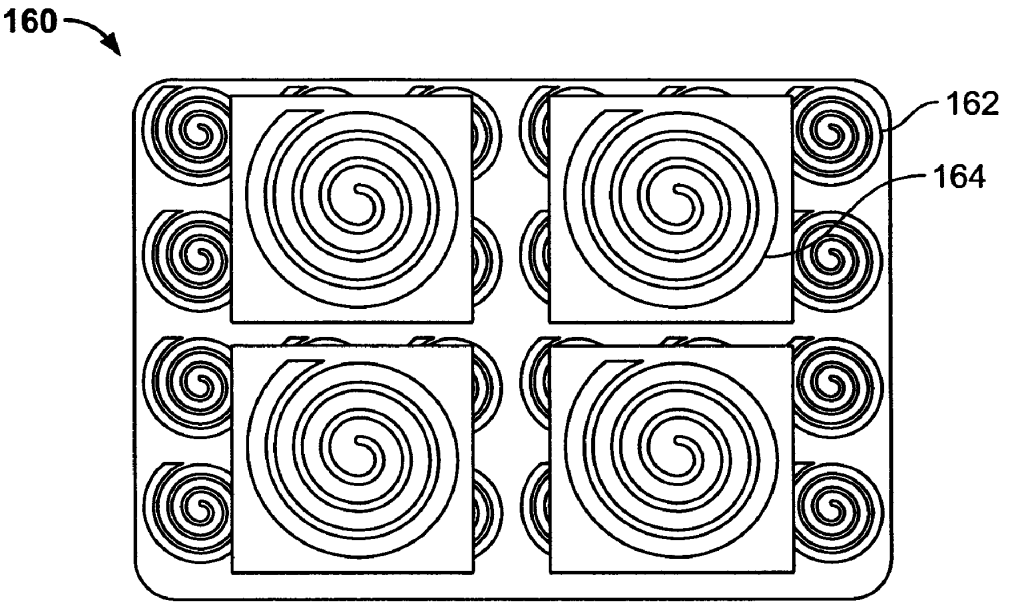
160
162
164

FIG. 5

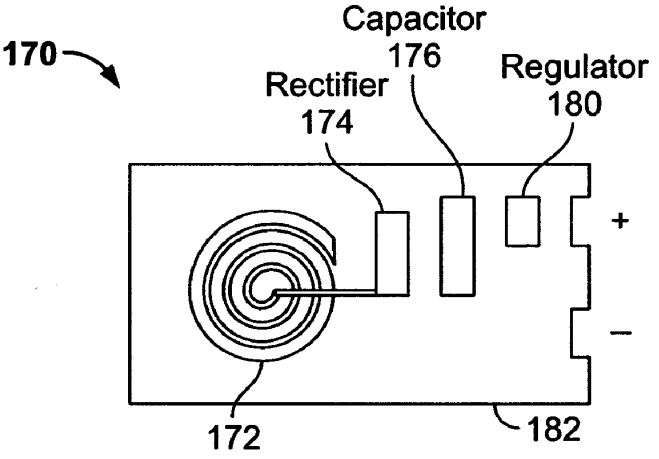
170
Capacitor
176
Rectifier
174
Regulator
180
+
−
172
182

FIG. 6

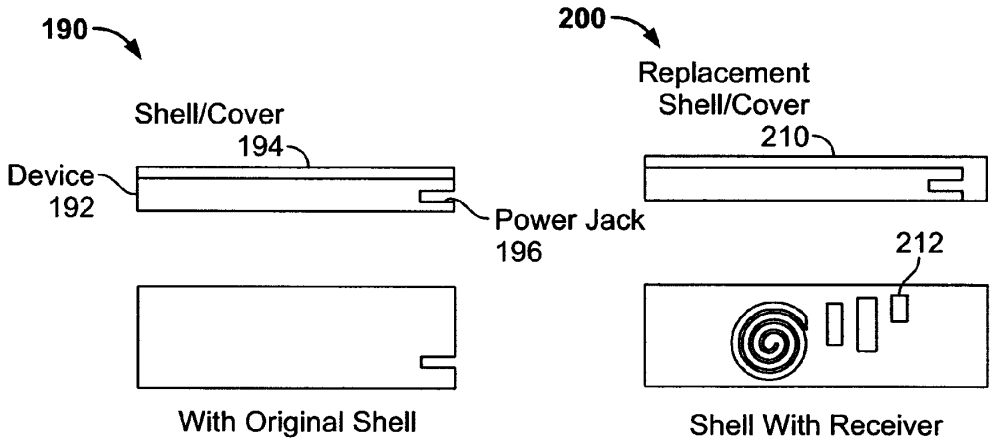
190
200
Replacement
Shell/Cover
210
Shell/Cover
194
Device
192
Power Jack
196
212
With Original Shell
Shell With Receiver

FIG. 7

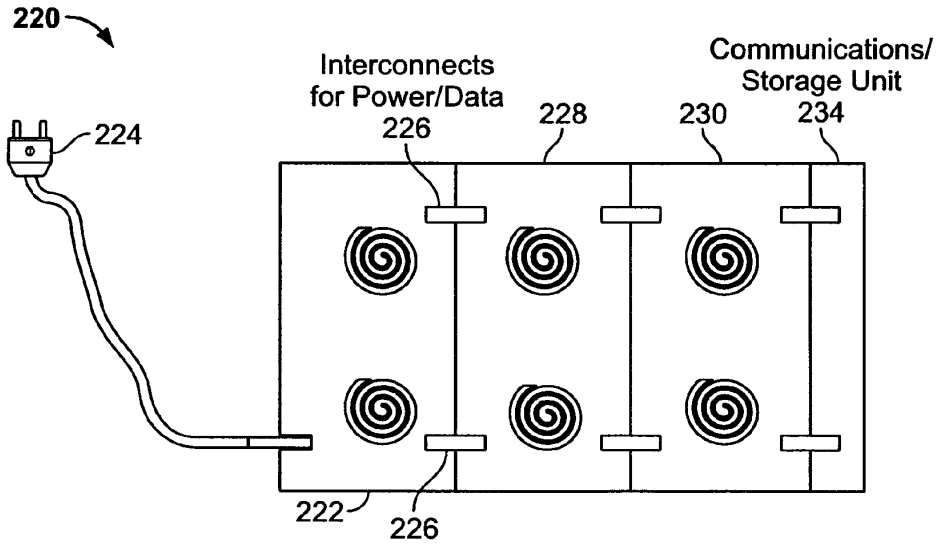
220
Interconnects
for Power/Data
226
228
230
Communications/
Storage Unit
234
224
222
226

FIG. 8

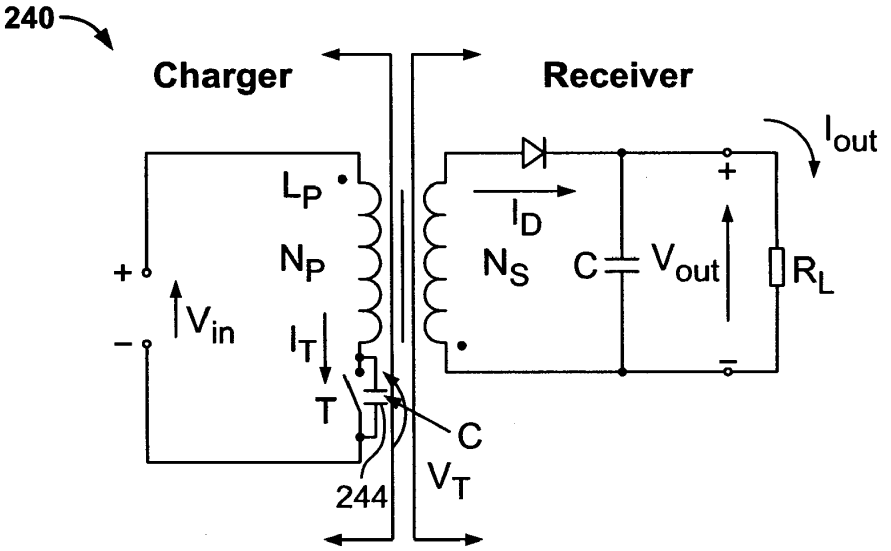
240
Charger
Receiver
I_{out}
L_P
N_P
I_D
N_S
C
V_{out}
R_L
+
−
V_{in}
I_T
T
C
V_T
244

FIG. 9

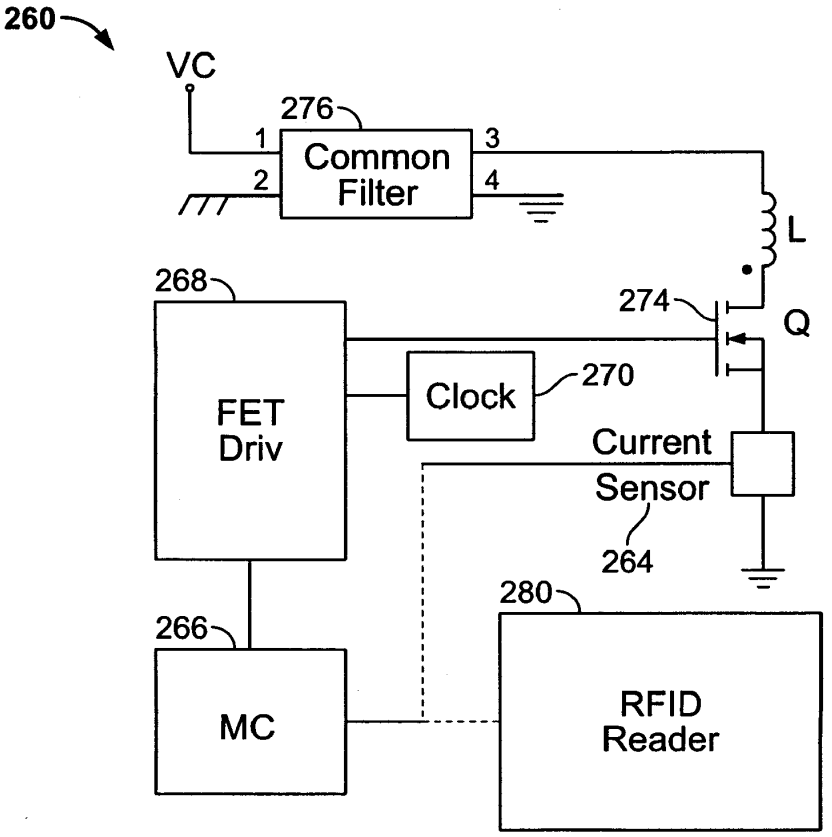
260
VC
276
1
2
3
4
Common Filter
L
268
274
Q
FET Driv
Clock
270
Current Sensor
264
280
266
MC
RFID Reader

FIG. 10

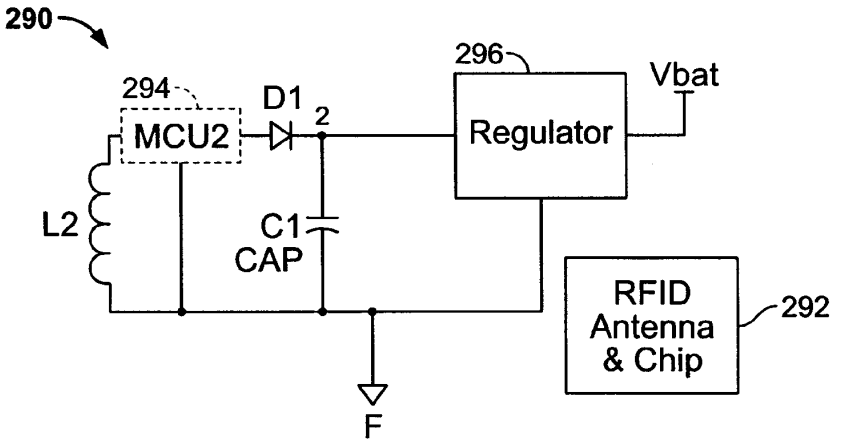
290
294
MCU2
D1
2
296
Regulator
Vbat
L2
C1
CAP
RFID
Antenna
& Chip
292
F

FIG. 11

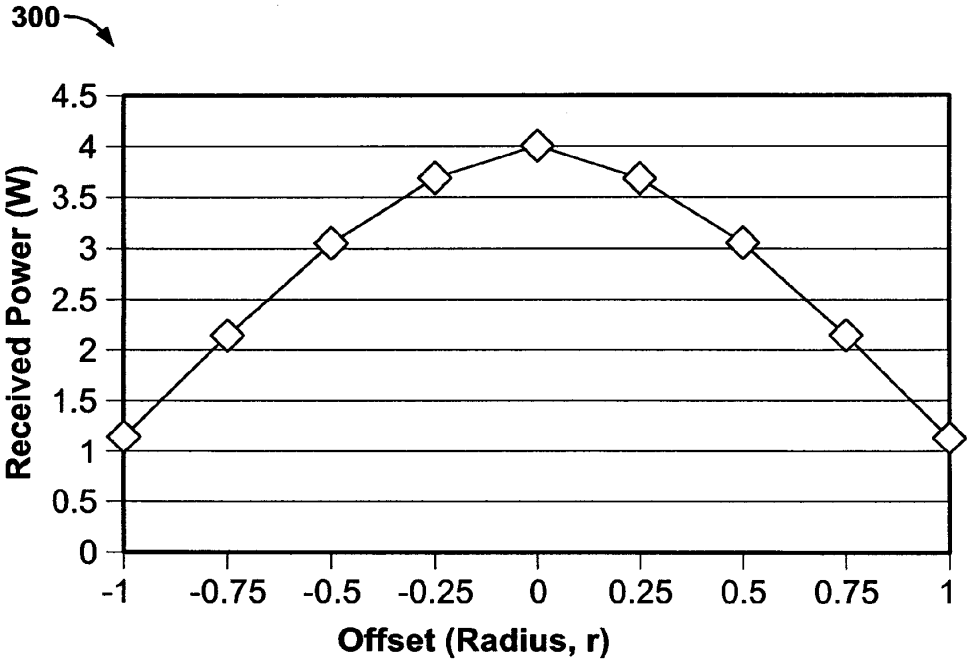
300
Received Power (W)
4.5
4
3.5
3
2.5
2
1.5
1
0.5
0
-1
-0.75
-0.5
-0.25
0
0.25
0.5
0.75
1
Offset (Radius, r)

FIG. 12

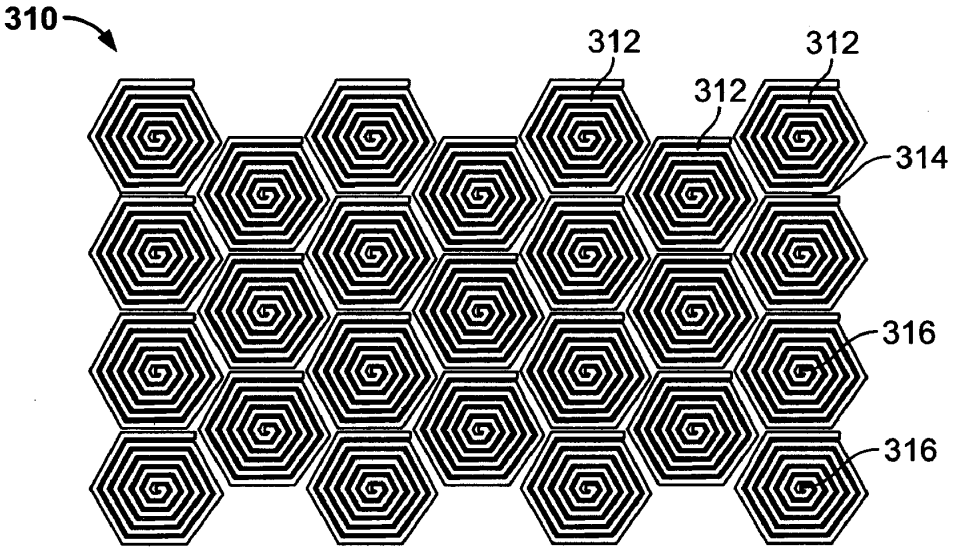

FIG. 13

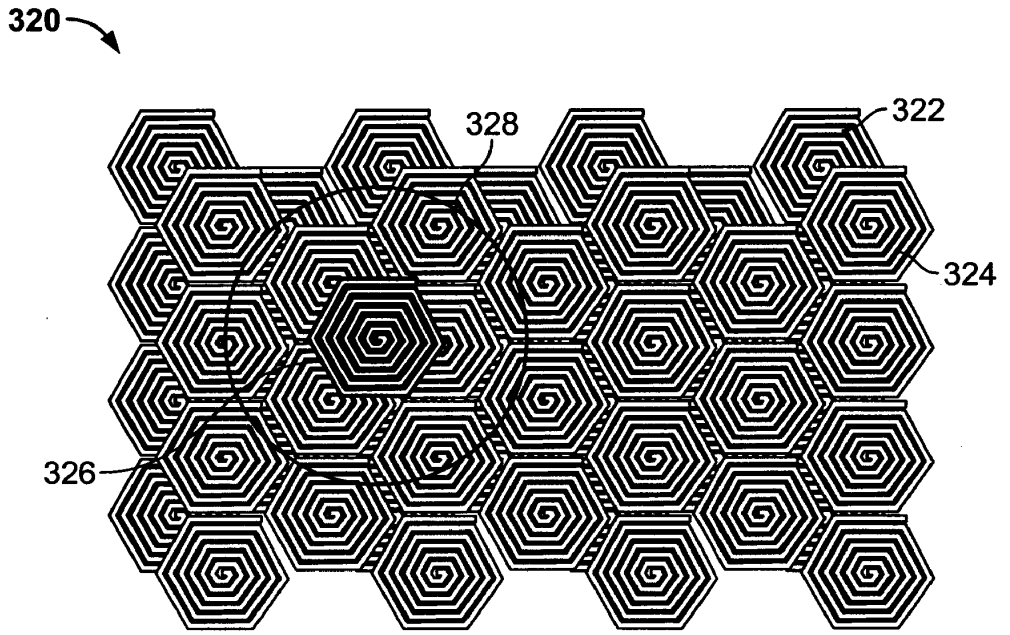

FIG. 14

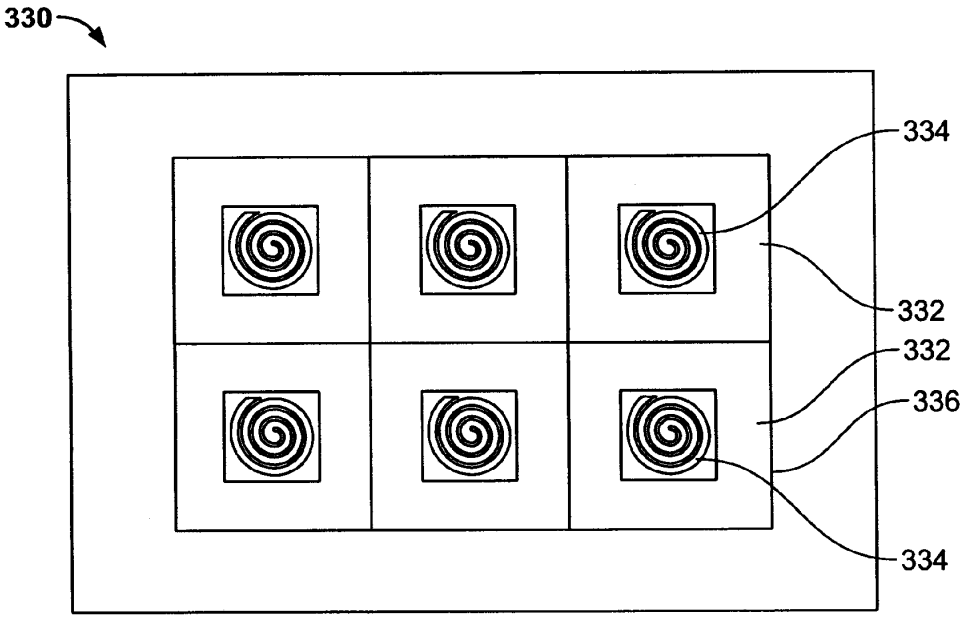

FIG. 15

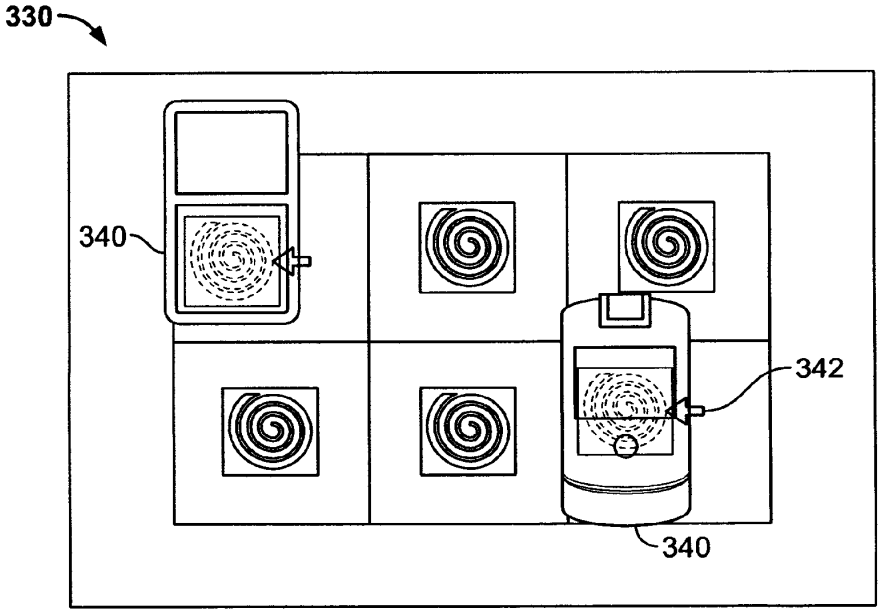

FIG. 16

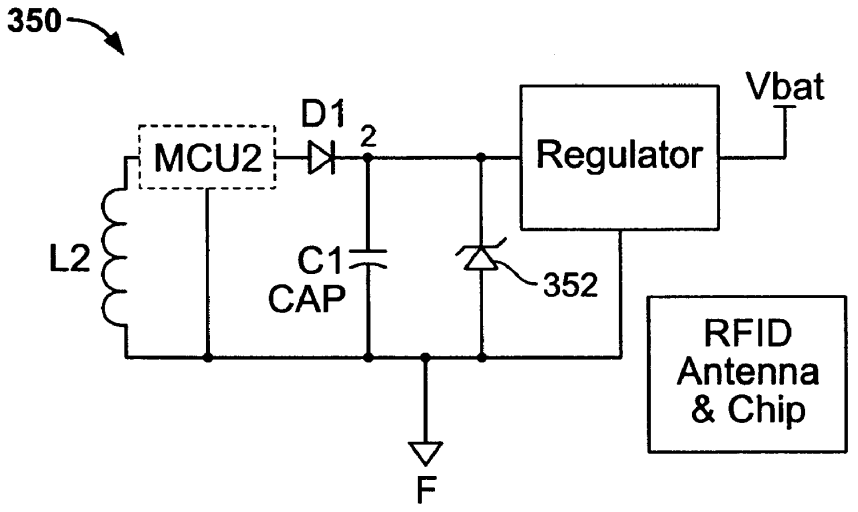
350
MCU2
D1
2
Regulator
Vbat
L2
C1
CAP
352
RFID
Antenna
& Chip
F

FIG. 17

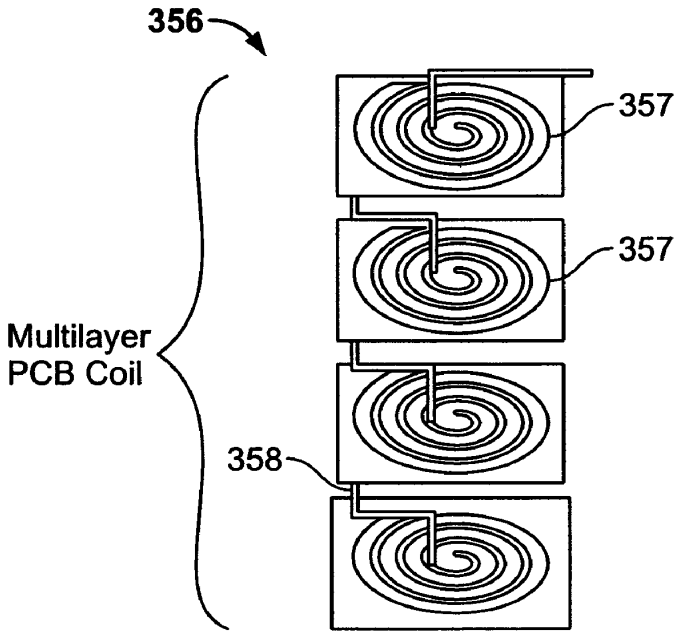
356
357
357
Multilayer
PCB Coil
358

FIG.18

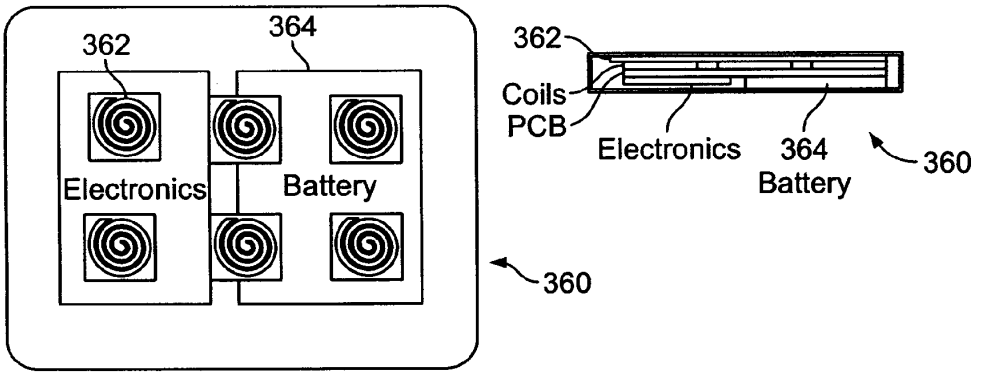
362
364
Electronics
Battery
360
362
Coils
PCB
Electronics
364
Battery
360

FIG. 19

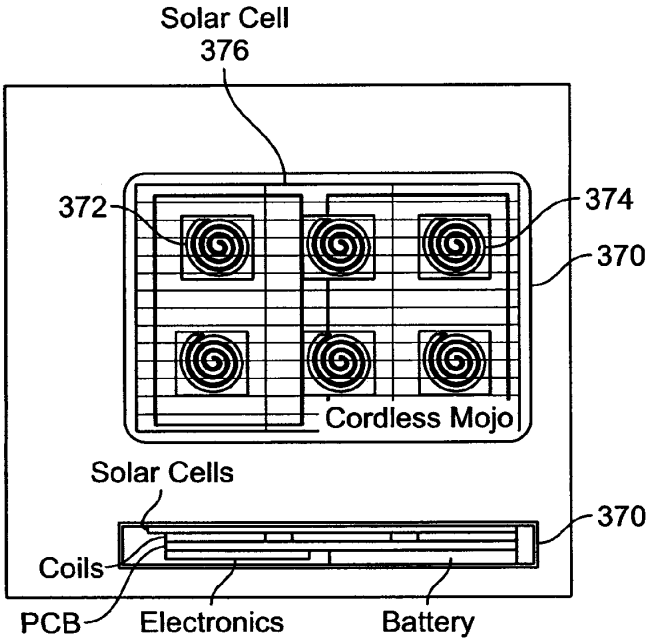
Solar Cell
376
372
374
370
Cordless Mojo
Solar Cells
370
Coils
PCB
Electronics
Battery

FIG. 20

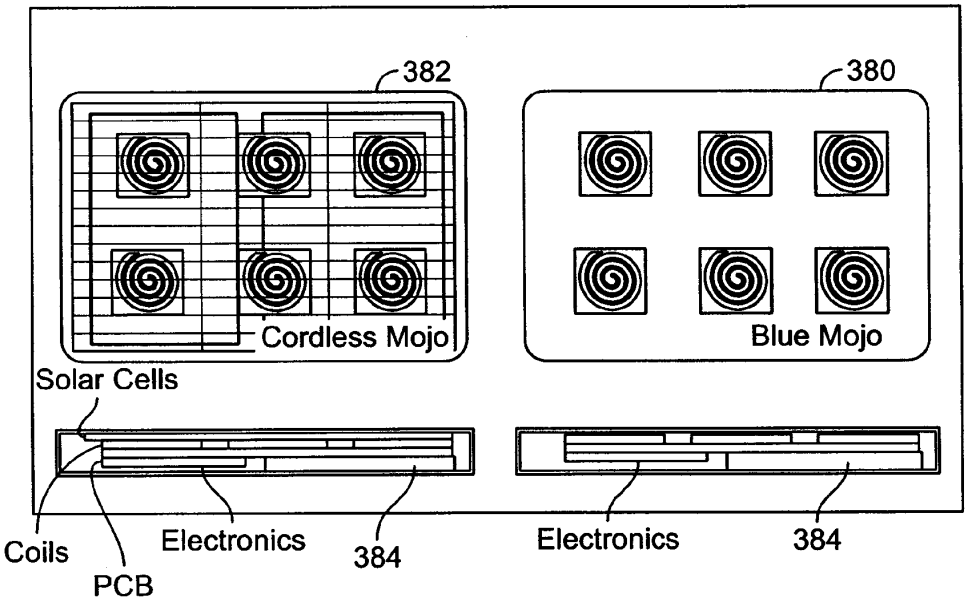
382
380
Cordless Mojo
Blue Mojo
Solar Cells
Coils
PCB
Electronics
384
Electronics
384

FIG. 21

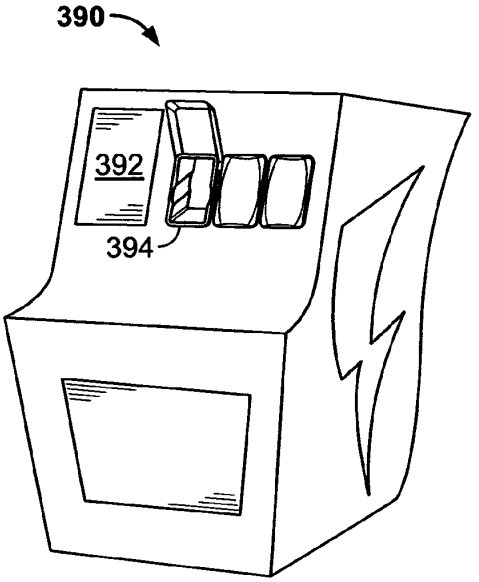
390
392
394

FIG. 22

POWER SOURCE, CHARGING SYSTEM, AND INDUCTIVE RECEIVER FOR MOBILE DEVICES

CLAIM OF PRIORITY

[0001] This application claims the benefit of provisional patent applications "MOBILE DEVICE, CHARGER, AND POWER SUPPLY", Application No. 60/810,262, filed Jun. 1, 2006; "MOBILE DEVICE, BATTERY, CHARGING SYSTEM, AND POWER SUPPLY SYSTEM", Application No. 60/810,298, filed Jun. 1, 2006; and "SYSTEM AND METHOD FOR PROVIDING AND USING A PORTABLE INDUCTIVE POWER SOURCE", Application No. 60/868,674, filed Dec. 5, 2006; each of which applications are hereby incorporated by reference herein.

COPYRIGHT NOTICE

[0002] A portion of the disclosure of this patent document contains material which is subject to copyright protection. The copyright owner has no objection to the facsimile reproduction by anyone of the patent document or the patent disclosure, as it appears in the Patent and Trademark Office patent file or records, but otherwise reserves all copyright rights whatsoever.

[0003] 1. Field of the Invention

[0004] The invention is related generally to power supplies, power sources, inductive power sources, charging systems, mobile devices, mobile device chargers, and batteries.

[0005] 2. Background

[0006] There is currently a need for powering portable or mobile devices for use in commercial, business, personal, consumer, and other applications. Examples of such devices include cellular telephones, personal digital assistants (PDAs), notebook computers, mobile email devices, Blackberry devices Bluetooth headsets, music players (for example, MP3 players), radios, compact disk players, video game consoles, digital cameras, electric shavers, and electric toothbrushes. Most of these devices include a rechargeable internal battery that must be first charged by an external power supply or charger, before the device itself can be used. The power supply typically provides direct current (DC) voltage through a special connector to the device. The power supply can then be disconnected, and the device will continue to run for a short period of time until the battery is depleted. The voltage and power requirements of the different devices vary, and to date there is currently no standardized connector for the devices. As a result of this, each mobile device is invariably sold or distributed bundled with its own charger. The costs associated with these multiple different types and numbers of charger are paid by the consumer indirectly by being incorporated into the prices being charged for the mobile device.

[0007] The rapid increase in the total number and variety of mobile products has meant that most people have several of the above-mentioned devices. In a typical day, that user would have to separately connect their multiple devices to each of their appropriate chargers for charging of each device. In addition, many people find it necessary to charge their devices in different locations such as their offices and cars. Thus, many users have purchased additional chargers for their offices and cars, for use in charging their mobile phones, notebook computers, and music players in those locations.

[0008] It will be evident that the above situation has caused typical users to have a multitude of incompatible devices (i.e. power supplies and chargers) that essentially provide the same function of charging a mobile device, but because of the number and variety that must be kept by the user are inconvenient to use. In many situations, users simply forget to charge their devices, or else find they need to recharge their device in situations where no appropriate charger is available. This leads to loss of ability to use the device when desired or needed.

[0009] In addition, when traveling way from home, mobile users have a particular problem in that they need to pack and carry the multiple chargers for their devices. In many situations, these chargers are bulkier and heavier than the devices themselves, and use of these devices in foreign countries requires clumsy adaptors, and sometimes voltage converters. This leads to a high degree of inconvenience for the ever-more-mobile consumer.

[0010] In addition, the power connector for the mobile devices is often cheaply manufactured, and a source of mechanical and electrical failure. In many applications, such as toothbrushes or applications where the device is exposed to water and needs to be hermetically sealed, such a physical connection can not be used. Thus an alternative means of powering those types of devices must be used.

[0011] Several products have tried to address this situation. Some companies propose the use of a universal charger that consists of a power supply base unit, and interchangeable tips that both fit into the base unit and in turn fit different devices. The tip includes a customized regulator that sets the voltage required by the particular device. However, a user must carry the multiple tips he or she needs for each of the various devices they have, and then charge each device serially by connecting the device to the power supply. While this product reduces the overall weight of the charging tools the user must carry, the user still needs to carry and exchange the tips to connect to different devices. In addition, the charging of multiple devices simultaneously is often not possible.

[0012] Realizing that a power supply typically contains a transformer for voltage conversion, another approach is to split the transformer into two parts: a first part can contain the first winding and the electronics to drive this winding at the appropriate operating frequency, while the second part consists of a winding where power is received and then rectified to obtain DC voltage. If the two parts are brought into physical proximity to each other, power is transformed from the first part to the second inductively, i.e. by induction, without any physical electrical connection. This is the approach that is used in many electrical toothbrushes, shavers, and other products that are expected to be used in wet environments. However, a common problem with such inductive units is that the windings are bulky, which restricts their use in lightweight portable devices. Furthermore, to achieve adequate power transfer, the parts must be designed to fit together suitably so that their windings are closely aligned. This is typically done by molding the device casing (for example, an electric toothbrush) and its charger/holder so that they fit together in only one suitable way. However, the molded base and shape of the portable device means they cannot be used in a universal fashion to power other devices.

[0013] Some companies have proposed pad-like charging devices based on inductive concepts, but that also ostensibly allow for different types of devices to be charged. These pads typically includes grids of wires in an x and y direction, that carry an electrical current, and that generate a uniform magnetic field parallel to the surface of the pad. A secondary coil wound around a magnetic core lies on the surface of the pad and picks up the magnetic field parallel to the surface, and in this manner energy can be transferred. However, each of these methods suffer from poor power transfer, in that most of the power in the primary is not picked up in the secondary, and thus the overall power efficiency of the charger is very low. In addition, the magnetic cores used for the primary and secondary are often bulky and add to the total cost and size of the system, and limit incorporation into many devices.

[0014] Another point to note is that, while all of the above devices allow a user to charge a device, they also require the charging device or base unit to be electrically connected to a power source, such as a power outlet or a DC source. In many cases, the user may not have access to such a power source such as when traveling, camping, or working in an area without access to power. However, to date, no device has been provided that is portable., and that allows for inductive charging of multiple devices with differing power requirements, and which itself can be intermittently or occasionally charged either by an external power source, or by other means, or that is self-powered or includes its own power source.

SUMMARY

[0015] A power source, charging system, and inductive receiver for mobile devices is disclosed herein. In accordance with an embodiment, a pad or similar base unit comprises a primary., which creates a magnetic field by applying an alternating current to a winding, coil, or any type of current carrying wire. A receiver comprises a means for receiving the energy from the alternating magnetic field and transferring it to a mobile or other device. The receiver can also comprise electronic components or logic to set the voltage and current to the appropriate levels required by the mobile device, or to communicate information or data to and from the pad. The system may also incorporate efficiency measures that improve the efficiency of power transfer between the charger and receiver,

[0016] In some embodiments the receiver can also comprise electronic components or logic to set the voltage and current to the appropriate levels required by the mobile device, or to communicate information to the pad. In additional embodiments, the system can provide for additional functionality such as communication of data stored in the electronic device or to be transferred to the device. Some embodiments may also incorporate efficiency measures that improve the efficiency of power transfer between the charger and receiver, and ultimately to the mobile device. In accordance with an embodiment the device includes an internal battery for self-powered operation. In accordance with other embodiments the device can include a solar cell power source, hand crank, or other means of power supply for occasional self powered operation. Other embodiments can be incorporated into charging kiosks, automobiles, and other applications.

BRIEF DESCRIPTION OF THE FIGURES

[0017] FIG. **1** shows a pad using multiple receiver/energizer coils in accordance with an embodiment of the invention,

[0018] FIG. **2** shows a figure of a circuit diagram in accordance with an embodiment of the invention.

[0019] FIG. **3** shows a charging pad using multiple coils in accordance with an embodiment of the invention.

[0020] FIG. **4** shows a charging pad using multiple overlapping coil layers in accordance with an embodiment of the invention.

[0021] FIG. **5** shows the use of multiple coil types and sizes in overlapping pad layers in accordance with an embodiment of the invention.

[0022] FIG. **6** shows a receiver with an integrated battery in accordance with an embodiment of the invention.

[0023] FIG. **7** shows a coupling of receiver with a device to be charged in accordance with an embodiment of the invention.

[0024] FIG. **8** shows a pad allowing modular or multiple connectivity in accordance with an embodiment of the invention.

[0025] FIG. **9** shows a figure of a circuit diagram in accordance with an embodiment of the invention.

[0026] FIG. **10** shows a figure of a circuit diagram in accordance with an embodiment of the invention.

[0027] FIG. **11** shows a figure of a circuit diagram in accordance with an embodiment of the invention.

[0028] FIG. **12** shows a figure of power transfer chart in accordance with an embodiment of the invention.

[0029] FIG. **13** shows a figure of a coil layout in accordance with an embodiment of the invention.

[0030] FIG. **14** shows a figure of a coil layout in accordance with an embodiment of the invention.

[0031] FIG. **15** shows a figure of a charging pad with multiple coils in accordance with an embodiment of the invention.

[0032] FIG. **16** shows a figure of a charging pad with movable coils in accordance with an embodiment of the invention.

[0033] FIG. **17** shows a figure of a circuit diagram in accordance with an embodiment of the invention.

[0034] FIG. **18** shows an illustration of a means of stacking coils, in accordance with an embodiment of the invention.

[0035] FIG. **19** shows an illustration of a device for inductive power charging that includes an internal battery for self-powered operation, in accordance with an embodiment of the invention.

[0036] FIG. **20** shows an illustration of an inductive charger unit with a solar cell power source for self powered operation, in accordance with an embodiment of the invention.

[0037] FIG. **21** shows an illustration of an inductive charger unit with an incorporated communications and/or storage unit, in accordance with an embodiment of the invention.

[0038] FIG. **22** shows an illustration of a kiosk that incorporates an inductive charger unit in accordance with an embodiment of the invention.

DETAILED DESCRIPTION

[0039] A power source, charging system, and inductive receiver for mobile devices is disclosed herein. In accordance with an embodiment, a pad or similar base unit comprises a primary, which creates a magnetic field by applying an alternating current to a winding, coil, or any type of current carrying wire. A receiver comprises a means for receiving the energy from the alternating magnetic field and transferring it to a mobile or other device. The receiver can also comprise electronic components or logic to set the voltage and current to the appropriate levels required by the mobile device, or to communicate information or data to and from the pad. The system may also incorporate efficiency measures that improve the efficiency of power transfer between the charger and receiver.

[0040] In some embodiments the receiver can also comprise electronic components or logic to set the voltage and current to the appropriate levels required by the mobile device. In some embodiments, the receiver can also contain circuitry to sense and determine the status of the electronic device to be charged, the battery inside, or a variety of other parameters and to communicate this information to the pad. In additional embodiments, the system can provide for additional functionality such as communication of data stored in the electronic device (for example, digital images stored in cameras, telephone numbers in cell phones, songs in MP3 players) or data into the device.

[0041] Embodiments can also incorporate efficiency measures that improve the efficiency of power transfer between the charger and receiver, and ultimately to the mobile device. In accordance with an embodiment, the charger or power supply comprises a switch, (for example, a MOSFET device or another switching mechanism), that is switched at an appropriate frequency to generate an alternative current (AC) voltage across a primary coil, and generates an AC magnetic field. This field in turn generates a voltage in the coil in the receiver that is rectified and then smoothed by a capacitor to provide power to a load, with the result being greater efficiency.

[0042] In accordance with other embodiments the coils are mounted such that they can move laterally within the pad and within an area of their segments, while continuing to be connected to their driver electronics placed on the edges of the area. The floating coils and the drive circuit are sandwiched in between thin upper and lower cover layers that act to allow the coils lateral movement while limiting vertical movement. When a secondary is placed on the pad, the pad senses the position of the secondary coil and moves the coils to the right position to optimize power transfer. Magnets can be used to better orient the coils and improve greater power transfer efficiency.

[0043] Additional embodiments are also described herein. For example in accordance with an embodiment the device includes an internal battery for self-powered operation. In accordance with other embodiments the device can include a solar cell power source hand crank, or other means of power supply for occasional self powered operation. Other embodiments can be incorporated into charging kiosks, automobiles, computer cases, and other electronic devices and applications.

Inductive Charging System

[0044] While the above mentioned technologies describe various aspects of inductive charging., they do not address the basic requirements that a consumer and manufacturer desire in such a product. These include the following desired features:

- **[0045]** The pad should be able to charge a number of devices with various power requirements efficiently. A typical number would be 1-6 devices, and probably up to 4 low power (up to 5 W) devices simultaneously, When multiple devices are being charged, a method for energizing only those coils near a device is preferable.
- **[0046]** The same pad should be able to power low-power devices (mobile phones, PDAs, cameras, game consoles, etc.) with power requirements of 5 W or less, and higher-power devices such as notebook computers (which often have a power requirement of 60 W or higher).
- **[0047]** The power transfer efficiency between the primary coil and the secondary should be maximized. Lack of efficiency in the power transfer would necessitate larger and heavier AC to DC power supplies. This would add cost and decrease product attractiveness to customers. Thus methods where the entire pad is energized are not as attractive.
- **[0048]** A simple method for verification of the manufacturer of the secondary, and possibly information for power requirements, should be supported as necessary to ensure product compatibility and to provide means of product registration and licensing.
- **[0049]** The EMI radiation from the system should be minimized, and ideally, the system should radiate little or no EMI with no device present. A charger should preferably not emit any power until an appropriate device is brought close to the charger itself. In this way, electric power is not wasted, and electromagnetic power is not emitted needlessly. In addition, accidental effects on magnetically sensitive devices such as credit cards, disk drives and such are minimized.
- **[0050]** The pad and the receiver should be reasonably simple to construct, and cost effective. Since both parts can be integrated into mobile devices, the overall size, weight, and form factor should be minimized.

[0051] As used herein, the term charger can refer to a device for supplying power to a mobile or stationary device for the purpose of either charging its battery, operating the device at that moment in time, or both. For example, as is common in portable computers, the power supply can operate the portable computers or charge its battery, or accomplish both tasks simultaneously. In accordance with an embodiment, the mobile device charger can have any suitable configuration, such as the configuration of a flat pad. The power received by the mobile device from the mobile device charger (such as the primary in the mobile device charger) can be rectified in the receiver and smoothed by a capacitor before being connected to the rechargeable battery which is represented by the load in the picture above. To ensure proper charging of the battery, a regulator can be placed between the output of the receiver and the battery. This regulator can sense the appropriate parameters of the

battery (voltage, current, capacity), and regulate the current drawn from the receiver appropriately. The battery can contain a chip with information regarding its characteristics that can be read out by the regulator. Alternatively, such information can be stored in the regulator for the mobile device to be charged, and an appropriate charging profile can also be programmed into the regulator.

[0052] FIG. **1** shows a pad using multiple receiver/energizer coils in accordance with an embodiment. In its simplest format, the mobile device charger or power supply preferably has a substantially flat configuration, such as the configuration of a pad **100**, and comprises multiple coils or sets of wires **104**. These coils or wires can be the same size as or larger than the coils or wires in the mobile devices, and can have similar or different shapes, including for example a spiral shape. For example, for a mobile device charger designed to charge up to four mobile devices of similar power (up to 10 W each) such as mobile handsets, MP3 players, etc., four or more of the coils or wires would ideally be present in the mobile device charger. The charger pad or pad can be powered by plugging into a power source such as a wall socket. The pad can also be powered by another electronic device, such as the pad being powered through the USB outlet of a laptop or by the connector that laptops have at the bottom for interfacing with docking stations, or powering other devices. The pad can also be incorporated into a docking station, such as may be used by notebook computers.

[0053] A mobile device can include a receiver that includes one or more coils or wires to receive the power from the mobile device charger. As described in further detail below, the receiver can be made part of the battery in the mobile device or of the shell of the mobile device. When it is part of the mobile device shell, the receiver can be part of the inside surface of the mobile device shell or of the outside surface of the mobile device shell. The receiver can be connected to the power input jack of the mobile device or can bypass the input jack and be directly connected to the battery. In any of these configurations, the receiver includes one or more appropriate coil or wire geometries that can receive power from the mobile device charger when it is placed adjacent to the mobile device charger. In accordance with an embodiment, the coils in the mobile device charger and/or the coils in the mobile devices can be printed circuit board (PCB) coils, and the PCB coils can be placed in one or more layers of PCB.

[0054] In some embodiments, the charger can also itself be built into a mobile device. For example, a laptop computer or other portable or mobile device can incorporate a charger section so that other mobile devices can be charged as described above. Alternatively, using the same set of coils or wires, or a separate set of coils or wires, any mobile device can itself be used as a charger to power or charge other mobile devices.

[0055] In accordance with an embodiment, the mobile device charger or pad, and the various mobile devices, can communicate with each other to transfer data. In one embodiment, the coils in the mobile device charger that are used for powering the mobile device, or another set of coils in the same PCB layer or in a separate layer, can be used for data transfer between the mobile device charger and the mobile device to be charged or the battery directly. Techniques employed in radio and network communication, such as radio frequency identification (RFID) can be used. In one embodiment a chip connected to an antenna (for example, the secondary coil or separate data antenna) or another means of transfer of information can be used to provide information about, for example, the presence of the mobile device, its authenticity (for example its manufacturer code) and the devices charging requirements (such as its required voltage, battery capacity, and charge algorithm profile).

[0056] In accordance with an embodiment, a typical sequence for charger operation can be as follows: The mobile device charger can be in a low power status normally, thus minimizing power usage. However, periodically, each of the coils (or a separate data coil in another PCB layer) is powered up in rotation with a short signal such as a short radiofrequency (RF) signal that can activate a signal receiver in the secondary such as an RF ID tag. The mobile device charger then tries to identify a return signal from any mobile device (or any secondary) that may be nearby. Once a mobile device (or a secondary) is detected the mobile device charger and the mobile device proceed to exchange information. This information can include a unique ID code that can verify the authenticity and manufacturer of the charger and mobile device, the voltage requirements of the battery or the mobile device, and the capacity of the battery. For security purposes or to avoid counterfeit device or pad manufacture, such information could be encrypted, as is common in some RFID tags.

[0057] In accordance with various embodiment, other protocols such as Near Field Communications (NFC) or Felica can be used, wherein the circuitry containing the ID and the necessary information is powered either by the mobile device or remotely by the mobile device charger. Depending on the particular implementation needs, Bluetooth, WiFi, and other information transfer processes can be used. Additional information regarding the charging profile for the battery can also be exchanged and can include parameters that would be used in a pre-programmed charge profile stored in the mobile device charger. However, the information exchanged could be as simple as an acknowledge signal that shows the mobile device charger that a mobile device is present. The charger can also contain means for detection and comparison Of the strength of the signal over different locations on the charger. In this way, it could determine the location of the mobile device on the charger, and then proceed to activate the appropriate region for charging.

[0058] In some embodiments that require greater simplicity, no communication need take place between the mobile device charger and the mobile device. In some embodiments the mobile device charger can sense the mobile device by detecting a change in the conditions of a resonant circuit in the mobile device charger when the mobile device is brought nearby. In other embodiments the mobile device can be sensed by a number of proximity sensors such as capacitance, weight, magnetic, optical, or other sensors that determine the presence of a mobile device near a coil in the mobile device charger. Once a mobile device is sensed near a primary coil or section of the mobile device charger, the mobile device charger can then activate that primary coil or section to provide power to the secondary coil in the mobile device's battery shell, receiver module or the device itself.

Inductive Charging Circuit

[0059] Each mobile device and its battery has particular characteristics (voltage, capacity, etc.). In order to facilitate

these different devices with a single universal mobile device chargers several circuit architectures are possible, some of which are described in further detail below.

[0060] FIG. **2** shows the main components of a typical inductive power transfer system **110**. The circuit illustrated is used to illustrate the principle of inductive power transfer and is not meant to be limiting to the present invention. In accordance with an embodiment, the charger **112** comprises a power source **118**, and a switch T **126** (which can be a MOSFET or other switching mechanism) that is switched at an appropriate frequency to generate an AC voltage across the primary coil Lp **116** and generate an AC magnetic field. This field in turn generates a voltage in the coil **120** in the receiver **114** that is rectified and then smoothed by a capacitor to provide power **122** to a load RI **124**. For ease of use, a receiver can be integrated with a mobile device, such as integrated inside the mobile device or attached to the surface of the mobile device during manufacture, to enable the device to receive power inductively from a mobile device charger or integrated into, or on its battery.

[0061] The mobile device or its battery typically can include additional rectifier(s) and capacitor(s) to change the AC induced voltage to a DC voltage. This is then fed to a regulator chip which includes the appropriate information for the battery and/or the mobile device. The mobile device charger provides power and the regulation is provided by the mobile device. The mobile device charger, after exchanging information with the mobile device, determines the appropriate charging I powering conditions to the mobile device. It then proceeds to power the mobile device with the appropriate parameters required. For example, to set the mobile device voltage to the right value required, the value of the voltage to the mobile device charger can be set. Alternatively, the duty cycle of the charger switching circuit or its frequency can be changed to modify the voltage in the mobile device. Alternatively, a combination of the above two approaches can be followed, wherein regulation is partially provided by the charger, and partially by the circuitry in the secondary.

Inductive Charger

[0062] To allow the operation of the mobile device charger regardless of position of the mobile device, the total area of the mobile device charger can be covered by coils or by another wire geometry that creates magnetic field. FIG. **3** shows a charging pad using multiple coils in accordance with an embodiment of the invention. As shown in FIG. **3**, the pad **140** is largely covered with individual energizer coils **144**.

[0063] FIG. **4** shows a charging pad using multiple overlapping coil layers in accordance with an embodiment of the invention. This embodiment addresses the problem of voids between the multiple coils. As shown in FIG. **4**, any areas of the pad **150** with minimal magnetic field between a first set of coils **152** can be filled by a second set of coils **154**, that are tiled such that the centers of this coil array fill the voids in the primary set. This second set can be at a different layer of the same PCB or in a different PCB. In each of these geometries, the sensing circuitry can probe each location of a coil in a raster, predetermined, or random fashion. Once a mobile device on or near a coil is detected, that coil is activated to provide power to the receiving unit (secondary) of the appropriate device,

[0064] It can be seen from the above example that by providing more layers of the PCB with coils, or by providing coils of different geometry or size, one can obtain as much resolution or coverage as desired.

[0065] In accordance with an embodiment, to power mobile devices with power requirements that exceed maximum powers attainable by typical coils in a surface, the mobile device, during its hand shake and verification process can indicate its power/voltage requirements to the mobile device charger. Several geometries for achieving power/voltage levels otherwise not attainable from a single primary coil of the mobile device charger are possible.

[0066] In one geometry, the power receiving unit of the mobile device has several coils or receiving units that are connected such that the power from several primary coils or sets of wires of the mobile device charger can add to produce a higher total power. For example, if each primary coil is capable of outputting a maximum of 10 Watts, by using 6 primary coils and 6 secondary coils, a total output power of 60 Watts can be achieved. The number of primary and secondary coils need not be the same, and a large secondary coil (receiving unit) that would be able to capture the majority of magnetic flux produced by 6 or other number of primary coils or a large primary coil powering 6 or some other number of secondary coils can achieve the same effect. The size and shape of the multiple primary coils and secondary coils also do not need to be the same. Furthermore, neither set of primary and secondary coils need to be in the same plane or PCB layer. For example, the primary coils in the examples shown above could be dispersed such that some lay on one PCB plane and the others in another plane.

[0067] In another geometry, the PCB of the mobile device charger has multiple layers, wherein coils or wire patterns of certain size and power range can be printed on one or more layers and other layers can contain coils or wire patterns of larger or smaller size and power capability. In this way, for example, for low power devices, a primary from one of the layers will provide power to the mobile device. If a device with higher power requirements is placed on the mobile device charger, the mobile device charger can detect its power requirements and activate a larger coil or wire pattern with higher power capabilities or a coil or wire pattern that is connected to higher power circuitry.

[0068] One may also achieve similar results by using a combination of the different processes and geometries described above.

[0069] FIG. **5** shows the use of multiple coil types and sizes in overlapping pad layers in accordance with an embodiment of the invention. As shown in FIG. **5**, the mobile device charger or pad **160** can comprise two overlapping layers with a first layer **162** containing low power coils, and a second layer **164** containing high power coils.

Inductive Charging Receiver

[0070] To apply the inductive charging technology to current and future electronic devices, some of the desired characteristics include:

- **[0071]** The receiver should provide sufficient power to the mobile or other device with the device in proximity (e.g. several millimeters to several centimeters) to the pad or charging device,
- **[0072]** The receiver should be of low cost, and of reasonably small size in terms of volume and weight.

[0073] The receiver may in some instances be capable of being integrated into the inside of the device by the device manufacturer, so as to allow customers to then use the mobile device with a charging pad.

[0074] The receiver may in some instances contain circuitry to identify the presence of the receiver and the characteristics of the charging pad,

[0075] The receiver may in some instances contain a means of communication of information and data from the mobile device to the pad.

[0076] As described above, the inductive charging pad is used to power a receiver, which in turn is used to power or to charge a portable or mobile device. In accordance with one embodiment of the receiver, the power from the mobile device charger is emitted at a magnitude that would be sufficient to power any foreseeable mobile device (such as 5 or 10 W for small mobile devices). The receiver that is appropriate for each mobile device has a power receiving part that when matched to the mobile device charger is able to receive sufficient power for the mobile device. For example a receiver for a mobile phone requiring 2.5 Watts can be a coil with certain diameter, number Of turns, wire width, etc. to allow receipt of the appropriate power. The power is rectified, filtered, and then fed into the battery or power jack of the device. As discussed above a regulator can be used before the power is provided to the battery or the mobile device.

[0077] To save energy, the power emitted by the mobile device charger can be regulated. It is desirable to regulate the power emitted by the charger because if the charger is emitting 10 W of power and the receiver is designed to receive 5 W, the rest of the emitted power is wasted. In one embodiment, the receiver or the mobile device can, through an electrical (such as RF), mechanical, or optical method, inform the charger about the voltage/current characteristics of the device. The primary of the charger in the circuit diagrams shown above then can be driven to create the appropriate voltage/current in the receiver. For example, the duty cycle of the switch in that circuit can be programmed with a microprocessor to be changed to provide the appropriate levels in the receiver.

[0078] In accordance with an embodiment, this can be done by a look up table in a memory location connected to a microprocessor or by using an algorithm pre-programmed into the microprocessor. Alternatively, the frequency of the switch can be changed to move the circuit into, and out of, resonance to create the appropriate voltage in the receiver. In an alternate geometry, the voltage into the circuitry in the primary can be changed to vary the voltage output from the receiver. Furthermore, the induced voltage/current in the mobile device can be sensed and communicated to the charger to form a closed-loop, and the duty cycle, frequency, and/or voltage of the switch can be adjusted to achieve the desired voltage/current in the mobile device.

[0079] In accordance with an embodiment, the receiver is built onto or into the battery for the mobile device. The receiver can include one or more coils or wires shaped to receive power from the charger. The one or more coils or wires can be either printed on one or more PCBs, or formed from regular wires. As described above, the receiver can also contain rectifier(s) and capacitor(s) to produce a cleaner DC voltage. This output can be directly, or through a current limiting resistor, connected to one of the contacts on the battery. To avoid overcharging the battery, a battery regulator chip can also be used. This circuit then measures the various parameters of the battery (voltage, degree of charging, temperature, etc.) and uses an internal program to regulate the power drawn from the circuit to ensure overcharging does not occur. The circuit could also include LEDs to show the receiver being in the presence of a magnetic field from the charger, complete charge LEDs and/or audible signals.

[0080] In typical commercial and end-user applications such as cell phones, PDAs, and MP3 players the battery could be incorporated into the battery pack or device by the original equipment manufacturer (OEM), or as an after market size and shape compatible battery pack that can replace the original battery pack. The battery compartment in these applications is typically at the bottom of the device. The user can open the battery compartment, take out the conventional battery, replace it with a modified battery in accordance with an embodiment of the invention, and then replace the battery lid. The battery could then be charged inductively when the mobile device is placed adjacent a mobile device charger.

[0081] To enhance the ability of the receiver to receive power, it may be desirable to minimize the distance between the charger's primary coil and the receivers coil or wire. In order to achieve this, in accordance with an embodiment the receiver's coil or wire can be put on the outside of the battery pack. FIG. **6** shows a receiver with an integrated battery in accordance with an embodiment of the invention. As shown in FIG. **6**, the receiver **170** comprises the battery **182**, together with the secondary coil **172**, and any rectifiers **174**, capacitors **176**, regulators **1 80** necessary for proper operation of the charging receiver. If the battery compartment lid of the device prevents a power receiving light emitting diode (LED) to be seen, the lid can itself be replaced with a see-through lid or a lid with a light pipe that will allow the user to see the charging indicator LED when the mobile device is placed adjacent to the charger,

[0082] In an alternative embodiment, the receiver battery can include a mechanical, magnetic, or optical method of alignment of the coils or wires of the charger and mobile device for optimum power transfer. In accordance with an embodiment, the center of the primary in the charger contains a magnet such as a cylinder or disk with the poles parallel to the charger surface and the magnetic field perpendicular to the charger surface. The receiver also contains a magnet or magnetic metal part of a similar shape behind or in front of the center of the coil or wire receivers. When the mobile device is placed on or adjacent to the charger, the magnets attract and pull the two parts into alignment with the centers of the two coils or wires aligned. The magnets do not need to be especially strong to actively do this. Weaker magnets can provide guidance to the user's hand and largely achieve the intended results. Alternatively, audible, or visual signs (LEDs that get brighter with the parts aligned), or mechanical means (dimples, protrusions, etc.) can be used for alignment.

[0083] In another embodiment, the coil or wires and the magnet in the charger are mechanically attached to the body of the charger such that the coil can move to align itself appropriately with the mobile device when it is brought into close proximity to the charger. In this way, an automatic alignment of coils or wire patterns can be achieved.

[0084] In another embodiment, the receiver electronics described above are preferably made from flexible PCB

which can be formed into a curved shape. Such a PCB can be placed on the surface of a battery pack that is not flat or that has a curved shape. The curve on the battery or back of a mobile device battery lid can be matched to a curved primary in the mobile device charger and be used for alignment. One example of usage of this embodiment can be for example flashlights that have circular handles, the batteries can be charged with coils on the side of circular batteries, or circling the cylindrical battery. Similarly, the mobile device charger can have a curved shape. For example, the charger surface can be in the shape of a bowl or some similar object. A mobile device that may have a flat or curved back can be placed into the bowl. The shape of the bowl can be made to ensure that the coil of the mobile device is aligned with a primary coil to receive power.

[0085] In another embodiment, the primary can be incorporated into a shape such as a cup. A mobile device can be placed into the cup standing on end and the receiver could be built-in to the end of the mobile device (such as a mobile phone) or on the back or circumference of the device. The receiver can receive power from the bottom or wall of the cup.

[0086] In another embodiment, the primary of the charger can have a flat shape and the mobile devices can be stood up to receive power. The receiver is built into the end of the device in this case and a stand or some mechanical means can be incorporated to hold the device while being charged.

[0087] In another embodiment, the charger can be made to be mounted on a wall or a similar surface, vertically or at an angle (such as on a surface in a car), so as to save space. The charger could incorporate physical features, magnets, fasteners or the like to enable attachment or holding of mobile devices to be charged. The devices to be charged can also incorporate a retainer, magnet, or physical shape to enable them to stay on the charger in a vertical, slanted, or some other position. In this way, the device could be charged by the primary while it is near or on it.

[0088] For those applications where the lid of the battery compartment or the bottom part of the mobile device is made from a metal, a replacement non-metallic lid or backing can be used. Alternatively, the coil can be attached to the outside of the metal surface. This allows electromagnetic (EM) fields to arrive at the power receiver coil or wires. The rest of the receiver (ice, circuitry) can be placed behind a metal for the receiver to work. In some other applications where the battery has metal parts, these parts may interfere with the EM field and the operation of the coil in the receiver. In these cases, it may be desirable to provide a distance between the metal in the battery and the coils. This could be done with a thicker PCB or battery top surface. Alternatively, to provide additional immunity, ferrite material (such as those provided by Ferrishield Inc.) can be used between the receiver and the battery to shield the battery from the EM fields. These materials can be made so as to be thin, and then used during the construction of the integrated battery/receiver.

[0089] In another embodiment, the receiver in the battery also includes a means for providing information regarding battery manufacturer, required voltage, capacity; current, charge status, serial number, temperature, etc. to the charger. In a simplified embodiment, only the manufacturer, required voltage, and/or serial number is transmitted. This information is used by the charger to adjust the primary to provide the correct charge conditions. The regulator in the receiver can then regulate the current and the load to charge the battery correctly and can end charge at the end. In another embodiment, the receiver can control the charging process fully depending on the time dependent information on battery status provided to it. Alternatively, the charging process can be controlled by the charger in a similar manner. As described above, the information exchange between the charger and the receiver can be through an RF link or an optical transmitter/detector, RFID techniques, Near-Field Communication (NRC), Felica, Bluetooth, WiFi, or some other method of information transfer. Similarly, the receiver could send signals that can be used by the charger to determine the location of the receiver to determine which coil or section of the charger to activate. The communication link can also use the same coil or wires as antenna for data transfer or use a separate antenna. In some embodiments the received can use the actual capabilities of the mobile device (for example, the built-in Bluetooth or NFC capabilities of mobile phones) to communicated with the charging pad.

[0090] As described above., in accordance with some embodiments the receiver can be integrated into the body of the device itself at a location that may be appropriate and can be exposed to EM radiation from outside. The output of the receiver can be routed to the electrodes of the battery internally inside the device and appropriate circuitry inside the device can sense and regulate the power. The device can include LEDs, messages, etc. or audible signs that indicate to the user that charging is occurring or complete or indicate the strength of the received power (i.e. alignment with a primary in the charger) or the degree of battery charge. In other embodiments, the receiver is built into an inner or outer surface of a component that is a part of the mobile device's outer surface where it would be closest to the charger. This can be done as original equipment or as an after-market item. The component can be the lid of the battery pack or the bottom cover of the mobile device In yet other embodiments, the receiver can be integrated into the back or front of the battery compartment or an interchangeable shell for the mobile device for use in after-market applications. For example, in a mobile phone application, the back battery cover or shell can be removed and replaced with the new shell or battery cover with the receiver built in. FIG. **7** shows a coupling of receiver with a device to be charged in accordance with an embodiment of the invention. As shown in FIG. **7**, the original mobile phone setup **190** includes a device **192** with shell **194** and power jack **196**. The after-market modification **200** replaces the original shell with a combination shell **210** that includes the necessary receiver coils and batter couplings. The contacts from this circuitry can then make direct contact to the battery electrodes inside the mobile device or to some contact points inside the mobile device if such contacts exist or become provisioned by the device manufacturer during manufacture. Alternatively, the receiver may be a component (such as a shell) that has a connector that plugs into the input power jack of the mobile phone. The receiver can be fixed to, or detachable from, the mobile device. This could be achieved by having a plug that is attached either rigidly or by a wire to the receiver (shell). Alternatively, the replacement receiver (shell) could be larger than the original shell and extend back further than the original shell and contain the plug so that when the receiver (shell) is attached, simultaneously, contact to the input power jack is made. Alternatively, the receiver (shell) can have a pass-through plug so

that while contact is made to this input power connectors the connector allows for an external regular power supply plug to be also used as an alternative. Alternatively, instead of a pass-through, this part could have a power jack in another location in the back so that a regular power supply could be used to charge the battery. In cases where the connector to the device performs other functions such as communication to the device, a pass-through connector can allow communication/connectivity to the device.

[0091] In accordance with another embodiment, the replacement receiver (i.e. the replacement shell) or the plug in unit, in addition to the power receiver components and circuitry, can include additional circuitry that can provide further functionalities to the mobile device. These could include, for example, the ability to exchange data through Bluetooth, WiFi: NFC Felica, WiMax, RFID, or another wireless or optical mechanism. It could also provide extended functionalities such as Global Positioning System (GPS) location information, flashing lights, flashlight, or other decorative or electronic functions. As described above, various methods for improving coil alignment, or location, battery manufacturer, or battery condition information transfer can also be integrated into the receiver or replacement shell.

[0092] In another embodiment, the receiver is supplied in the form of a separate unit that is attached to the input jack of the mobile device or integrated into a secondary protective skin for the mobile device. Many leather or plastic covers for mobile phones, cameras, and MP3 players already exist. The primary purpose of these covers is to protect the device from mechanical scratches, shocks, and impact during daily use. However, they often have decorative or advertising applications. In accordance with one embodiment, the receiver is formed of a thin PCB with the electronics formed thereon, and the receiver coil or wire that is attached to the back of the device and plugs into the input jack similar to the shell described above. Alternatively: it can be connected through a flexible wire or flexible circuit board that is routed to a plug for the input power jack.

[0093] In another embodiment, the receiver can be a separate part that gets plugged into the input jack during charging and is placed on the charger and can then be unplugged after charging is finished,

[0094] In yet another embodiment, the receiver is built in the inside or outside surface or in between two layers of a plastic, leather, silicone, or cloth cover for the mobile device and plugs in or makes contact to the contact points on the device.

[0095] It will be noted that certain devices such as notebooks and some music players have metal bottom surfaces. The methods described above for changing the back surface or use of a plug in the mobile device or a secondary skin with an integrated receiver is particularly useful for these applications. As described previously, the effect of the metal surface can also be minimized, if necessary, by increasing the distance between the wires of the receiver and the metal surface or by placing a Ferrite layer in between the receiver and the metal bottom.

[0096] It is also noted that the use of methods such as curving the receiver or integrating magnets, LEDs, audio signals or messages, etc for alignment, or methods for location, manufacturer or charging condition identification, as described above are possible with all embodiments of the present invention described above. In any of the above cases, the charger can contain lights, LEDs, displays, or audio signals or messages to help guide the user to place the mobile device on a primary coil for maximum reception, to show charging is occurring, and to show the device is fully charged. Displays to show how full the battery is or other information can also be incorporated.

Portable Inductive Charging Pad

[0097] In accordance with an embodiment a flexible mobile device charger is provided in the shape of a pad that can be folded or rolled up for carrying. In one implementation of the invention, the electronics of the charger are placed on a thin flexible PCB or the coils are made of wires that can be rolled up or shaped. The electronics components made of silicon chips, capacitors, resistors and the like may not be flexible but take up very little space. These rigid components can be mounted on a flexible or rigid circuit board, while the main section of the pad containing the coils or wires for energy transfer could be made to be flexible to allow conformity to a surface or to be rolled up. Thus the pad resembles a thin mouse pad or the like.

[0098] In some cases, it may be advantageous to the user to have a mobile device charger that is extendible in functionalities. The cases include but are not limited to:

- **[0099]** A user may purchase a mobile device charger for charging a single low power device but, at a later stage, may want to extend the capability to charge more devices simultaneously.
- **[0100]** A user may purchase a mobile device charger for charging one or more low power devices but may want to charge more low power or high power devices.
- **[0101]** A user may buy a mobile device charger that can charge one or more low-power or high-power devices and later wish to have the communication or local storage, or a rechargeable battery, or means of power generation such as solar panels or some other capability, added to the charger.

[0102] In all of the cases above and others, it can be useful to have a modular approach to expand the capabilities of the mobile device charger. FIG. **8** shows a pad **220** allowing modular or multiple connectivity in accordance with an embodiment of the invention. In this case, the user can purchase a first unit **222** that is powered by an electric outlet **224**. However, interconnects **226** for power and data are provided so that additional units **228**, **230** can simply fit or plug into this first one directly or indirectly and expand the capabilities as the customers needs grow. Data communications and storage units **234** can also be attached in a modular fashion. This approach would enable the customer to use the technology at a low cost entry point and grow his/her capabilities over time.

[0103] Some of the electronics devices that can benefit from these methods include: mobile phones, cordless phones, personal data assistants (PDAs), pagers, mobile electronic mail devices, Blackberry's, MP3 players, CD players, DVD players, game consoles, headsets, Bluetooth headsets, head-mounted displays, GPS units, flashlights, watches, cassette players, laptops, electronic address books, handheld scanning devices, toys, electronic books, still cameras, video cameras, film cameras, portable printers, portable projection systems, IR viewers, underwater cameras or any waterproof device, toothbrushes, shavers, medical equipment, scientific equipment, dental equipment, mili-

tary equipment, coffee mugs, kitchen appliances, cooking pots and pans, lamps or any battery, DC, or AC operated device.

[0104] In addition, inductive power transfer can provide power to devices that are not so far battery operated. For example, a mobile device charger in the shape of a pad placed on a desk or a kitchen table can be used to power lamps or kitchen appliances. In one embodiment for the use in a kitchen, a flat charger, such as a pad, placed on or built into a counter can allow the chef to place devices on the charger to be inductively charged during use and simply place them away after use. The devices can be, for example, a blenders mixer, can openers or even pot, pan, or heater. This can eliminate the need for a separate cooking and work area. It will be noted that placement of a metal pan close to the inductive pad could directly heat the pan and the contents while keeping the charger surface cool. Due to this reason, inductive kitchen ranges have been commercialized and shown to be more efficient than the electric ranges that work by resistive heating of a coil.

[0105] In another embodiment, rather than direct heating of metal pans by nearby inductive fields, cooking pans may include a receiver and heating or even cooling elements. Once placed on a charger, the pan would heat up or cool down as desired by a dial or the like on the pan allowing precise temperature control of the pan and the contents.

[0106] Similarly, in an office or work area setting, if a charger is readily available for charging mobile devices, it can also be used to power up lamps for illumination of the desk or used to power or charge office appliances, such as fax machines, staplers, copiers, scanners, telephones, and computers. In one embodiment, the receiver can be built into the bottom of a table lamp and the received power would be used to power the incandescent or LED lamp.

[0107] In another embodiment, a mug, cup, glass, or other eating appliance such as a plate can be fitted with a receiver at its bottom. The received power can be used to heat the mug, etc. with a heating coil thus keeping beverages or food warm to any degree desired. Furthermore, in accordance with an embodiment, by use of devices such as thermoelectric coolers the contents could be cooled or heated as desired.

[0108] Similarly, many children's toys often run out of battery due to extended use or simple forgetfulness to turn the device off. Often these batteries are included inside a battery compartment that for safety reasons can only be opened by a screwdriver. Inclusion of the receiver into toys could reduce the need to change the device batteries and allow recharging with a much simpler method.

[0109] In another implementation, the receiver can be built into medical devices that are implanted or inserted in the body. Since batteries in these devices such as pace makers, cochlear implants, or other monitoring devices may need periodic charging, inductive power transfer can provide an ideal non-contact method for charging and testing the performance of the devices (i.e. check up) or downloading data that the devices have logged.

[0110] In another implementation, some active RFID tags include batteries that can send out information about the status or location of a package or shipment. An inexpensive method for charging these tags would be to include a receiver with each tag. Thus, a charger can be used to power or charge these RFID tags.

[0111] It will be noted that the effective working distance of the inductive charger is dependent on the power and the frequency of the source. By increasing the frequency to several or tens of MHz, one can obtain a working distance of several inches or feet depending on the application for the technology It wilt also be noted that any of the above embodiments that eliminate the input power jack are especially important because they add to product reliability by removing a source of mechanical or environmental failure. In addition, elimination of the jack is imperative for water proof applications and for extra safety.

Efficiency Enhancements in Circuit Design

[0112] In accordance with an embodiment of the invention, in order for the power efficiency to be maximized and to minimize losses in the coil, the coils should be manufactured to have as low a resistance as possible. This can be achieved by use of more conductive material such as gold, silver, etc. However in many applications, the cost of these materials are prohibitive. In practice, reduced resistivity can be obtained by using thicker copper-clad PCBs. Most common PCBs use 1-2 oz copper PCBs. In accordance with some embodiments the coil PCB used for the wireless charger can be made from PCBs clad with between 2 and 4, or even 6 oz copper. The process of manufacture of the PCB can also be optimized to achieve higher conductivity. For example, sputtered copper has a higher conductivity than rolled copper and is typically better for this application. In operation, the coil and the circuitry demonstrates a resonance at a frequency determined by the parameters of the design of the coil (for examples the number of windings, coil thickness, width, etc.). However, previous work has concentrated on circuits driven by square waves with a MOSFET. This approach has the disadvantage that since a square wave is not a pure sinusoid, it produces harmonics. These harmonics are undesirable because:

[0113] The PCB coil produces optimum power transfer efficiency at a particular frequency. The harmonics in the primary signal are not transferred as efficiently and decrease the overall system efficiency.

[0114] The rapid voltage change in the leading and falling edge of the square wave creates oscillations that create further harmonics resulting further EMI.

[0115] The harmonics radiated by the primary create higher frequency components that contribute to the E[M that is more radiative (due to higher frequency). It is desirable to limit the frequency range of the operation of the overall system to as low a frequency as possible while maintaining the other requirements of the system (such as sufficient working distance etc.). So these harmonics must be avoided.

[0116] At the instance of switch turn-on and turn-o the change in the in-rush current to the coil causes huge voltage swings across the coil for a short period of time. All the power is transferred to the secondary during these times that are short.

[0117] Previous attempts to achieve **90**% transfer efficiency with PCB coil primary and receiver have used a laboratory power supply to drive their circuit. While this approach has demonstrated the higher efficiency that can be achieved with a sinusoidal voltage on the coil, such power supplies are complex, costly, and too large to be able to be used for any practical charger application.

[0118] In accordance with an embodiment of the present invention, a capacitor is added in parallel to the drain/source contacts of the MOSFET. FIG. **9** shows a figure of a circuit diagram **240** in accordance with an embodiment. The coil in the wireless charger system is driven by switching the FET at the resonance frequency of the circuit when the receiver is present. Without the receiver nearby, the circuit is detuned from resonance and radiates minimal EMI. The capacitor **244** acts as a reservoir of energy that discharges during switch off time and enhances energy transfer.

[0119] By way of example, in accordance with an embodiment that uses an IRFR0220 chip as a FET and use 4 Oz. copper coils with 9 turns and 1.25" diameter, the circuit in FIG. **2** above, can be loaded with RL of 10 Ohm and tuned to operate at 1.3 MHz. With matching coils in the primary and secondary, without capacitor C., total circuit efficiency of the circuit including the clock and FET driver circuit approaches 48%. Addition of a 1600 pF capacitor in parallel to the FET increases the total circuit efficiency to 75% (a better than 50% increase in efficiency), while simultaneously decreasing the voltage across the FET and also the harmonics in the circuit. The coil to coil transfer efficiency with the capacitor placed in parallel with the FET is estimated to be approximately 90%. The advantages of this approach include:

[0120] High efficiency (~90% coil to coil).

[0121] Low ringing oscillation and EMI.

[0122] Simplicity and low cost.

[0123] Lower FET source-drain voltage swing allowing use of a larger selection of FETs.

[0124] In many applications, it is also desired that the pad and the receiver are arranged so that the pad does not emit power unless the receiver is nearby. FIGS. **10** and **11** show figures of circuit diagrams in accordance with an embodiment of the invention. In addition to high efficiency, one method that is required for minimizing EMI and maintaining high overall efficiency is the ability to recognize the presence of a secondary nearby, and then turning on the pad only when appropriate. Two methods for this are shown in FIGS. **10** and **11**.

[0125] As shown in FIG. **10**., in accordance with one embodiment, the pad circuit **260** incorporates a micro control unit (MCU**1**) **266** that can enable or disable the FET driver **268**. The MCU**1** receives input from another sensor mechanism that will provide information that it can then use to decide whether a device is nearby, what voltage the device requires, and/or to authenticate the device to be charged.

[0126] One of the sensor mechanisms for this information are through the use of an RFID reader **280** that can detect an RFID tag of circuit and antenna in the secondary (i.e. device to be charged). The information on the tag can be detected to identify the voltage in the secondary required and to authenticate the circuit to be genuine or under license. The information on the tag can be encrypted to provide further security. Once a device containing the tag is nearby the pad, the RFID reader can be activated read the information on the tag memory and compare with a table to determine authenticity/voltage required or other info. This information table can also reside on the MCU**1** memory. Once the information is read and verified, the MCU**1** can enable the FET driver to start driving the coil on the pad and to energize the receiver.

[0127] In another embodiment the MCU**1** relies on a clock **270** to periodically start the FET driver. The current through the FET driver is monitored through a current sensor **264**. Several methods can be implemented with this implementation, including for example:

[0128] A small resistor can be placed in series with the FET to ground contact. The voltage across this resistor can be measured by a current sensor chip such as a Linear Technology Current Sense Amplifier part number LT1787.

[0129] A Hall sensor, such as a Sentron CSA-1A that measures the current from a wire running under it, can be placed on top of the PCB line from the PET to the ground to measure the current without any electrical connection to the circuit. The advantage of this approach is that no extra resistor in series with this portion of the circuit is necessary reducing the impedance.

[0130] Other techniques may be used to measure the current.

[0131] A Hall sensor or a Reed switch can sense a magnetic field. If a small magnet is placed inside the receiver unit of the system, a Hall sensor or Reed switch can be used to sense presence of the magnet and can be used as a signal to start the FET.

[0132] Other capacitance, optical, magnetic, or weight, etc. sensors can be incorporated to sense the presence of a secondary or receiver and to begin the energy transfer process,

[0133] FIG. **11** shows a figure of a circuit diagram **290** in accordance with an embodiment of the invention. In accordance with an embodiment, the MCU**1** can periodically start the FET driver. If there is a receiver nearby, it can power the circuit. The regulator **296**, or another memory chip in the circuit can be programmed so that on power-up, it draws current in a pre-programmed manner. An example is the integration of an RFID transponder chip in the path, such as ATMEL e5530 or another inexpensive microcontroller (shown here as MCU**2** **294**), that upon power-up modulates the current in the secondary that can then be detected as current modulation in the primary. As with the previous example, other sensors, such as an RFID antenna **292** can also be used to provide positional and other information.

[0134] FIG. **12** shows a figure of a power transfer chart **300** in accordance with an embodiment of the invention, illustrating transferred power as a function of offset between coils.

Efficiency Enhancements in Coil Layout

[0135] An important aspect of power transfer efficiency relates to the alignment of coils with respect to each other. FIGS. **13** and **14** show figures of a coil layout in accordance with an embodiment of the invention. If position independence is required, the pad PCB can be patterned with a coil pattern to cover the full area. FIG. **13** shows a pad type charger **310** including a layer of coils **312** with minimal spacing **314** between the coils. Each coil has a center **316** associated with it. The power transfer for a 1.25" diameter coil as the center of the secondary is offset from the center of primary. The power drops off to 25% of the maximum value when the two coils are offset by a coil radius. As described above, in order to better keep the coils aligned, use of magnets centered on the primary and the secondary coil can provide an automatic method of bringing the two parts into alignment.

[0136] In order to produce uniform fields, a number of coils around the secondary would typically need to be turned

on to produce a field. However, with such a pattern, if a secondary coil is placed in between two primary coils, the voltage is still not optimized. Research has shown that to obtain uniform fields, three layers of coil patterns offset with respect to each other are required.

[0137] FIG. **14** shows a pad-type charger **320** with two of the three layers **322 324** required to achieve position independent magnetic field pattern. For a secondary placed at the center of the circle, all the coils nearby (in and around the circle **328**) will need to be turned on to achieve a uniform field in the desired location **326**. While this approach solves the offset issue and can be used to provide position independence, it does not produce high transfer efficiency. The reason is that ten or more coils have to be turned on near the secondary center to create the uniform field in that area, which in turn leads to inefficient power transfer.

Efficiency Enhancements in Independent Coil Movement

[0138] In accordance with some embodiments, techniques are included to provide high transfer efficiency while maintaining position independence. FIG. **15** shows a figure of a charging pad with multiple coils in accordance with an embodiment of the invention. The area of the pad **330** is divided into a plurality of, or multiple segments **332**, that are bounded **336** by a wall or physical barrier, or simply some tethering means with no physical walls but that otherwise restrict movement to within the segment. The coils **334** are mounted such that they can move laterally, or float, within the area of their segments while continuing to be connected to the drive electronics placed on the edges of the area. In accordance with an embodiment, the floating coils and the drive circuit are sandwiched between thin upper and lower cover layers that act to allow the coils lateral movement while limiting vertical movement. When a secondary is placed on the pad, the pad senses the position of the secondary coil and moves the coils to the right position to optimize power transfer.

[0139] FIG. **16** shows a figure of a charging pad with movable coils in accordance with an embodiment of the invention. When the mobile device, for example a cell phone **340**, is placed on the pad **330**, the nearest coil moves **342** within its segment to better orient itself with the mobile device. In accordance with one embodiment, the method used for achieving this is by attaching a magnet to the bottom center of each coil in the pad. A matching magnet at the center of the receiver coil attracts the primary magnet nearby and centers it automatically with respect to the secondary.

[0140] In accordance with an embodiment, each coil in this configuration can be suspended by the wires carrying power to the coil or by a separate wire/spring or by another mechanism so that each coil can move freely in the plane of the pad while it can receive power from an individual or shared driving circuit. In order to facilitate movement, the surface of the coils or the bottom surface of the top layer for the base unit (the area where the coils move against) or both layers can be made smooth by use of a low friction material, attachment of a low friction material, or lubrication. The wire/spring or current carrying mechanism described above can also be used to center each coil in an area at the center of desired movement sector for each coil. In this way, without a secondary coil in the vicinity, each coil in the base unit stays at the central location of its sector and responds and moves to match a secondary coil when a device is brought nearby. Overlap of movement between adjacent base unit coils can be controlled by limiting movement through limiting length of current carrying wires to the coil, arrangement of the suspension, or spring, or placement of dividing sectors, pillars or by any other mechanism.

[0141] In another embodiment, the pad will include a method for detecting the presence of the mobile device/receiver and taking appropriate action to turn on the coil and/or to drive the coil with the appropriate pattern to generate the required voltage in the receiver. This can be achieved through incorporation of RFID, proximity sensor, current sensor, etc. A sequence of events to enable position independence and automatic pad turn-on can be:

[0142] a Multiple movable coils are used to cover the pad surface area.

[0143] The coils in the pad are normally off and periodically powered up sequentially to sense whether the secondary is nearby by measuring the current through the primary coil. Alternatively, proximity sensors under each section can sense the presence of a magnet or change in capacitance or other parameter to know where a device is placed. RFID techniques with localized antennas under each section or such can also be used,

[0144] Once a device is identified as placed in a section, the pad can interrogate the device through one of the processes described earlier to authenticate and to understand its voltage/power, etc. requirements,

[0145] The MCU**1** unit uses the information received above to set the PWM pattern which it will use to drive the FET drive to produce the appropriate voltage in the receiver.

[0146] The board continues to 'search' for other devices on the pad by scanning coils or using the RFID system, etc. and then turn on other coils as appropriate.

[0147] The pad also use the monitoring to find out when and if the first mobile device is removed from the pad or end of charge is reached.

Efficiency Enhancements in Coil Registration and Switching

[0148] In accordance with an embodiment., a global RFID system that would identify the approach of a mobile device to the pad can be used to 'wake up' the board. This can be followed by sequential polling of individual coils to recognize where the device is placed in a manner similar to described above. Other embodiments of the invention provide safeguards against false charging of objects placed on the base unit. It is known that a metal object placed on coils such as the ones in the base of the charger system would cause current to flow in the primary and transfer power dissipated as heat to the metal object. In practical situations, this would cause placement of keys and other metal objects on the base unit to trigger a start and to needlessly draw current from the base unit coil and possibly lead to failure due to over-heating. To avoid this situation, in a system as described above, the switching of voltage to the coil would not start unless an electronic device with a verifiable RFID tag is nearby thereby triggering the sequence of events for recognizing the appropriate coil to turn on and operate. In an alternate geometry, the total system current or individual coil current is monitored, and, if a sudden unexpected drawn current is noticed, measures to investigate further or to shut down the appropriate coil indefinitely or for a period of time or to indicate an alarm would be taken.

[0149] In another embodiment, the regulators or battery charging circuit in mobile devices or regulator in a receiver electronics typically has a start voltage (such as 5 V) that is required to start the charging process. Once the battery charge circuit detects the presence of this voltage, it switches on and then proceeds to draw current at a preset rate from the input to feed the battery for charging The battery charger circuits operate such that an under or over voltage at the start will prevent startup. Once the startup occurs, the voltage at the battery charger output is typically the voltage of the battery and depends on the state of charge, but is for example 4.4 V to 3.7V or lower for Lithium-Ion batteries. With a wireless charge system such as described here, the voltage on the secondary is highly dependent on relative position of the primary and secondary coil as shown in FIG. **5**. Since typically the start voltage of the battery charger is within a narrow range of the specified voltage, under-voltage and over-voltage in the receiver coil due to mis-alignment or other variation will result in shutdown of the battery charger circuit.

Efficiency Enhancements in Coil Voltage Clamping

[0150] FIG. **17** shows a figure of a circuit diagram **350** in accordance with an embodiment of the invention. In accordance with one embodiment, a Zener diode **352** is incorporated to clamp the maximum voltage at the output of the receiver prior to the regulator or battery charger circuit as shown in FIG. **17**. Using a Zener allows more insensitivity to placement between the primary and secondary coil while maintaining the ability to charge the device. For example, the drive pattern on the primary can be set so that when the primary and secondary coil are aligned, the voltage on the secondary is above the nominal voltage for the battery charger startup. For example, for a 5V startup, the voltage at center can be set for 6 or 7 volts. In this way, the Zener can be chosen to have an appropriate value (5 V) and clamp the voltage at this value at the input to the battery charger unit while the coils are centered or mis-aligned. Once the battery charger starts operation after detection of the appropriate voltage at the input, the battery charger circuitry would pull the voltage at this point to the pre-programmed voltage or voltage of the battery. In this way, the use of Zener diode would enable less sensitivity to position and other operational parameters in wireless chargers and would be extremely useful.

Efficiency Enhancements in Coil Stacking

[0151] FIG. **18** shows an illustration of a means of stacking coils, in accordance with an embodiment of the invention. In accordance with an embodiment, to achieve higher flux densities, a coil is constructed with two or more layers, for example by using two or more layers of printed circuit board. Multiple layer boards can be used to allow compact fabrication of high flux density coils. By altering the dimensions of the coil in each layer (including the thickness, width, and number of turns) and by stacking multiple layers, the resistance, inductance, flux density, and coupling efficiency for the coils can be adjusted so as to be optimized for a particular application.

[0152] In accordance with an embodiment, a transformer consisting of two PCB coils separated by a distance has many parameters that are defined by the design of the coil, including:

[0153] R_1 is the primary winding resistance,

[0154] R'_2 is the secondary winding resistance referred to the primary,

[0155] R_l is the resistive load,

[0156] L_{M1} is the primary leakage inductance,

[0157] L'_{M2} is the secondary leakage inductance referred to the primary,

[0158] L_{M1} is the primary mutual inductance,

[0159] C_1 is the primary winding capacitance,

[0160] C'_2 is the capacitance in the secondary winding referred to the primary,

[0161] C_{12} is the capacitance between primary and secondary windings, and

[0162] n is the turns ratio.

[0163] In accordance with the embodiment shown in FIG. **18**, a multi-layer PCB coil **356** is created in separate PCB layers **357**, which are then connected **358**, and manufactured together via common techniques used in PCB fabrication, for example by use of vias and contacts. The resulting overall stack is a thin multi-layer PCB that contains many turns of the coil. In this way, wide coils (low resistance) can be used, while the overall width of the coil is not increased. This technique can be particularly useful for cases where small x-y coil dimensions are desired, and can be used to create higher flux densities and more efficient power transfer.

Inductive Charger with Self-Powered Operation

[0164] FIG. **19** shows an illustration of a device for inductive power charging that includes an internal battery for self-powered operation, in accordance with an embodiment of the invention. As shown in FIG. **19**, an inductive charging unit such as an inductive pad **360** includes a rechargeable battery **364**. The unit is normally operated with, or is occasionally coupled to, power input from an electrical outlet, or from a dc source such as a car 12 volt dc outlet, or from an outlet in an airplane or an external dc source, or from another power source such as the USE, outlet from a computer or other device. Alternatively, the power can come from a mechanical source such as a windmill, or a human-powered crank handle. The unit can include coils **362** that are energized to transfer power to secondary coils in mobile electronics devices such as mobile phones, MP3 players, radios, cd players, PDAs, and notebook computers. At the same time, the input power charges the rechargeable battery inside the unit itself. When the external power source to the unit is disconnected, or when no input power is provided, the unit automatically switches its operation from its charged internal battery. Alternatively, the unit□s operation can be switch-opera:ted by user. In this way, users can continue to charge their devices by placement on the unit without any outside power source. This use can continue until the external power is restored or until the internal battery is completely discharged,

[0165] The ability of the unit to continue charging would depend on the capacity of the battery included. Thus, for example, with a 1500 mAH internal battery, the unit would be able to charge a mobile phone with a 1000 mAH battery completely if the losses due to conversion efficiency, operation of the circuitry in the unit, and other losses are up to 500 mAH,

[0166] In other embodiments of the invention, the unit can be powered by other power sources such as a fuel cell that

generates power from methanol or other sources. The unit can also be connected to the electric grid through an outlet or to an external DC power source such as power from an outlet in a car or airplane or be itself charged or powered inductively by another unit. However, when not connected to outside power, the unit can be powered by its internal power generator from the fuel cell and can charge devices placed on it inductively.

[0167] FIG. **20** shows an illustration of an alternate embodiment of an inductive charger unit or pad **370** with a solar cell power source for self powered operation, in accordance with an embodiment of the invention. As shown in FIG. **20**, the surface of the unit can be covered by a solar panel or solar cell **376**. In normal operation, the unit can be powered-up or charged by connection to an electric outlet or external DC source. But without external electric power, the panel generates electric power that is used to power the charger which in turn can charge devices placed on it through the inductors in the unit. In some embodiments the unit can also include a rechargeable battery **374** that can be charged when the unit is either connected to external electric power or charged by the solar cells on the surface of the unit. This battery can then operate the unit when the unit is either not connected to external electric power or the solar cell is not generating enough power to run the unit such as during operation at night.

[0168] FIG. **21** shows an illustration of an inductive charger unit with an incorporated communications and/or storage unit, in accordance with an embodiment of the invention. As shown in FIG. **21**, in accordance with some embodiments the charger, including for example the regular charger **380**, and the solar-cell powered charger **382**, can further comprise an optional communications and/or storage unit, for storage of data and transmission of data to and from a mobile device being charged. Examples of components that can be incorporated include Bluetooth, Near-field Communications (NFC), WiFi, WiMax, wireless USB, and proprietary communications capabilities, including means of connecting to the Internet.

Inductive Charger Applications and Kiosk

[0169] The technology described herein may also be used for other applications. In some applications, it may be desirable to build the inductive (as described above) or wire free charger into a case for an electronic device, a briefcase, or other carrier such as a box, holder, or container in a car or other wise. An example can be a brief case, hand bag, or back pack where the bottom part or the outside surface has an integrated charger. Any device enabled to receive power from such a charger (device containing coils and the appropriate electronics to receive power or with appropriate contacts for wire free charging) can be placed on or inside such a briefcase and be charged. The charging circuitry can be powered by plugging the briefcase, handbag, or back pack into an outlet power or having internal batteries that can be charged through power from a wall plug or by themselves being inductively charged when the briefcase, handbag, or backpack is placed on an another inductive or wire free charger. Uses can be applied to any bag, container, or object that can be used to essentially charge or power another device This first object can itself be charged or powered through an outlet directly by wires or wirelessly through an inductive or wire free charging system. As an alternative, the first object (the charger) can be powered by solar cells, Fuel cells, mechanical methods (hand cranks, pendulums, etc.).

[0170] In all of the above case, it is possible for the functions of the inductor or wire free charger and the power source for the charger (battery, fuel cell, solar cell, etc.) to be separated. Furthermore, in some cases, the charger part can be separated from a portable power source to operate it (such as a rechargeable battery) which is in turn powered or charged by another source (power outlet, fuel cell, solar cell, mechanical source, etc.). The three parts can be in the same enclosure or area or separate from each other.

[0171] An additional example may be an after market inductive or wire free charger for a car where the inductive or wire free charger or pad including a solar cell on the pad or in another area and connected to the pad by wires is used to charge mobile devices. Such a device placed on the dashboard or tray between seats or a special compartment can be used to charge a number of devices such as phones, MP3 players, cameras: etc. Devices such as GPS navigation systems, radar detectors, etc. can also be powered from such a device. In another application, mugs, cups, or other containers with a receiver circuitry and means of heating or cooling the contents can be used in combination with the inductive charger to keep the contents hot or cold. A dial or buttons on the cup or container can set the temperature. The charging device or pad can also contain rechargeable batteries that allow the device or pad to store energy and operate in the absence of any external power if necessary.

[0172] Other applications of this technology include clothing, jackets, vests, etc. that have an integrated inductive charger such that a user can power or charge a device by simply placing it on or near a pocket or an area where wireless inductive power is available. The jacket or clothing can in turn be powered by solar cells,. Fuel cells, batteries, or other forms of energy. It can also be powered by batteries that would be recharged through solar cells sown onto the clothing or be recharged by placing or hanging the clothing item on a rack or location where it is recharged wirelessly or inductively. By using inductive charging, the user does not have to plug in devices into individual wires and connectors at the appropriate jacket pocket.

[0173] In some cases, it may be desirable to build the charger or the secondary part (receiver for a charger) into the protective case of another device. For example, many products exist today that are after-market or optional items such as a skin or case for a music player, phone, PDA, or notebook computer. In one implementation, the case or skin can contain the electronics and the coil necessary to allow the device to be charged or charge other devices or both. The charger can be powered by the device it is attached to or can receive power from a separate source such as a solar cell fuel cell, etc. that is integrated with the charger or in another location and electrically connected to the charger. For example, in a briefcase, while the charger is inside the briefcase and can charge devices inside, the surface of the briefcase can have solar cells that would power the charger inside. The briefcase can also contain rechargeable batteries that would store power generated by the solar cells and use them when necessary to charge devices inside. Similarly, the charger can be built on the outside or inside surface of the case and charge devices placed on or near the surface.

[0174] It is also possible to provide a charger with modular components that allow other capabilities to be added later or

simultaneously as an option. In one embodiment, an inductive charging pad that contains a rechargeable battery can have a separate top surface module or all around cover or skin that contains a solar cell array and would simultaneously electrically connect to the charger pad to enable the battery internal to the unit to be charged without any external power input. It is also possible to have the cover or the outside skin to provide other capabilities such as communications, or simply provide a different look or texture so that the pad fits in with the user's taste or decor.

[0175] FIG. **22** shows an illustration of a kiosk that incorporates an inductive charger unit in accordance with an embodiment of the invention. As shown in FIG. **22**, the kiosk **390** includes a control screen **392** and an inductive charging pad **394**, to allow individuals to walk-up and purchase an occasional charge for their mobile device. Currently, the usage model of typical mobile user consists of charging their most essential device (phone, MP3 player, Bluetooth headset, etc.) during the night or at the office or car. In cases where the user is outside their environment for a long time such as traveling, this may not be possible. A variety of public mobile device charging stations have appeared that allow the user to charge their device in a public setting by paying a fee. An inductive or wire free public charging station or kiosk would allow the user to place their mobile device that is 'enabled' (i.e. has the appropriate receiver or components to allow it to receive power from the charger) on or in the wire free or inductive charger station and charge the device. The customer can pay for the service or receive the service for free depending on the service providers' approach. The payment can be cash, credit card, debit card, or other methods.

[0176] In accordance with an embodiment, a single pad with multiple stations can charge multiplicity of devices simultaneously. The user may be asked to pay for the service before charging a device or the service may be for free. Alternatively, each charging station can be in a compartment and the device is secured by a door that can only be opened through a code given to the device owner when charging starts or payment occurs. The door can also be secured by a combination lock or physical key.

[0177] Alternatively., the charging station or kiosk can be open and not physically secure but when the user pays for the service, a code is issued. The user proceeds to place their device to be charged but when the charging ends or the user wants to pick up the device, the code must be entered first. If no code is entered: an alarm is sounded or the device is deactivated or some other warning occurs. In this way, a thief or the wrong user can not remove the device without attracting attention that may act as a deterrent. A combination of the above techniques may be used in implementing a public charging kiosk.

[0178] Since a typical charging process can take up to 30 minutes or more, it is possible to also synchronize data, download songs, movies, etc, into the device during this time. Many of current mobile devices have Bluetooth or WiFi capability. Other communication protocols such as WiMax can increase the data rate further. By combining the charging and information transfer process, the service provider can charge for additional services. In addition, if a camera is being charged and has wireless capability, it can download the pictures or movies to a designated website or online storage area or be emailed to a designated email address while charging. In this way, a traveler can simultaneously charge a camera while downloading the contents of its memory to a location with larger memory. This would enable the traveler to free up limited memory space in their camera or other mobile device. Such a service would enable devices that have limited or short range wireless communication capabilities (such as mobile phones, MP3 players, cameras, etc.) to be able to connect to the internet and send or receive data indirectly. It is important to recognize that without the charging capability, a device conducting such downloading or synchronization through an intermediate device (Bluetooth to internet gateway for example) would often run out of power due to the length of time this would take. In this manner the charging capability of the kiosk enables a more effective operation,

[0179] The foregoing description of the present invention has been provided for the purposes of illustration and description. It is not intended to be exhaustive or to limit the invention to the precise forms disclosed. The embodiments were chosen and described in order to best explain the principles of the invention and its practical application, thereby enabling others skilled in the art to understand the invention for various embodiments and with various modifications that are suited to the particular use contemplated. It is intended that the scope of the invention be defined by the following claims and their equivalence,

[0180] Some aspects of the present invention may be conveniently implemented using a conventional general purpose or a specialized digital computer, microprocessor, or electronic circuitry programmed according to the teachings of the present disclosure. Appropriate software coding can readily be prepared by skilled programmers and circuit designers based on the teachings of the present disclosure, as will be apparent to those skilled in the art.

[0181] In some embodiments, the present invention includes a computer program product which is a storage medium (media) having instructions stored thereon/in which can be used to program a computer to perform any of the processes of the present invention. The storage medium can include, but is not limited to, any type of disk including floppy disks, optical discs, DVD, CD-ROMs, microdrive, and magneto-optical disks, ROMs, RAMs, EPROMs, EEPROMs, DRAMs, VRAMs, flash memory devices, magnetic or optical cards, nanosystems (including molecular memory ICs), or any type of media or device suitable for storing instructions and/or data.

[0182] The foregoing description of the present invention has been provided for the purposes of illustration and description. It is not intended to be exhaustive or to limit the invention to the precise forms disclosed. Many modifications and variations will be apparent to the practitioner skilled in the art. Particularly, while the embodiments of the systems and methods described above are described in the context of charging pads, it will be evident that the system and methods may be used with other types of chargers. Similarly, while the embodiments described above are described in the context of charging mobile devices, other types of devices can be used. The embodiments were chosen and described in order to best explain the principles of the invention and its practical application, thereby enabling others skilled in the art to understand the invention for various embodiments and with various modifications that are suited to the particular use contemplated. It is intended that the scope of the invention be defined by the following claims and their equivalence.

What is claimed is:

1. A charger system for use with a mobile device for charging or powering the mobile device inductively, comprising:

a base unit comprising one or more primary coils, the primary coils having a generally planar shape,

a power supply for passing a current through the primary coils to generate a magnetic field in a direction substantially perpendicular to the plane of the primary coil; and

wherein the perpendicular magnetic field is used to inductively generate a current in one or more secondary coils within one or more mobile devices placed close to the base unit, to charge or power the mobile device.

2. The system of claim **1** wherein one or more of the primary and secondary coils comprise substantially spiral shapes.

3. The system of claim **1** wherein the base unit includes a switch for automatically switching the primary coils on whenever a mobile device is placed close to the primary coil of the base unit and the presence of the mobile device is detected.

4. The system of claim **1** wherein the base unit includes multiple primary coils that can be used to simultaneously charge multiple mobile devices.

5. The system of claim **1** wherein the base unit is formed in the shape of a pad and wherein multiple primary coils are distributed within overlapping layers of coils within the pad.

6. The system of claim **5** wherein the multiple primary coils are allowed to move within a degree of freedom within their plane to more closely align the primary coil with the secondary coil of a mobile device.

7. The system of claim **1**, further comprising a data storage component for storage of data, for subsequent transmission of data to or from the mobile device.

8. The system of claim **1** wherein the base unit is integrated into a charging kiosk for occasional charging of mobile devices.

9. The system of claim **1** wherein one or more of the primary coils are stacked atop one another to increase transfer efficiency.

10. The system of claim **1**, wherein the charger or power supply senses the location of the mobile device and activates a primary coil near the mobile device, by sensing a change in a resonant circuit in the charger or power supply when the mobile device is in proximity to the primary coil.

11. The system of claim **1**, wherein the charger or power supply is formed in the shape of a cup, bowl or other container and wherein mobile devices can be placed inside to be charged or powered inductively.

12. The system of claim **1**, wherein a plurality of modular base units can be interconnected to form a larger single base unit.

13. A mobile device capable of inductive powering or charging comprising:

a battery for powering a mobile device; and

a receiver that is one of attached to, incorporated within, or coupled to the mobile device or the battery wherein the receiver comprises a secondary coil that inductively receives energy from a substantially perpendicular magnetic field generated by a base unit when the mobile device is placed close to the base unit, and wherein the energy so received is used to generate a current in the secondary coil and to charge or power the mobile device.

14. The mobile device of claim **13** wherein the receiver is formed of a flexible printed circuit board material and can be shaped to fit the battery or the mobile device.

15. The mobile device of claim **13** wherein the secondary coil comprises a substantially spiral shape.

16. The mobile device of claim **13**, wherein the mobile device is one of a kitchen appliance, dish, toy, cup, mug, glass, cup, mug, glass, plate, cooking pot, cooking pan, blender, mixer, can opener, office equipment lamp, printer, computer, copier, fax machine, or scanner.

17. The mobile device of claim **13**, wherein the mobile device is an RFID tag device which includes an internal battery.

18. The mobile device of claim **13**, wherein the mobile device includes an after-market battery compatible with an original battery for the device, and wherein the receiver is incorporated into the after-market battery and directly powers or charges the after-market battery when used in the mobile device and with the base unit.

19. The mobile device of claim **13**, wherein the mobile device includes a shell covering the battery, and wherein the receiver is attached to or incorporated within the shell and is coupled to the battery to power or charge the battery when used in the mobile device and with the base unit.

20. A system for simultaneously charging or powering a plurality of mobile devices inductively, comprising:

a base unit comprising

a plurality of one or more primary coils, the primary coils having a generally planar shape, and

a power supply for passing a current through the primary coils to generate magnetic fields for each coil in a direction substantially perpendicular to the plane of the primary coil;

a plurality of mobile devices capable of inductive powering or charging, each mobile device comprising

a battery for powering a mobile device, and

a receiver that is one of attached to, incorporated within, or coupled to the mobile device or the battery, wherein the receiver comprises a secondary coil; and

wherein the substantially perpendicular magnetic fields are used to inductively generate a current in the plurality of the secondary coils within one or more of the mobile devices placed close to the base unit, to charge or power the mobile devices,

* * * * *