EXHIBIT A

IN THE UNITED STATES DISTRICT COURT
FOR THE EASTERN DISTRICT OF TEXAS
TEXARKANA DIVISION

POWERMAT TECHNOLOGIES, LTD.,	§	
	§	
Plaintiff,	§	
	§	
v.	§	CIVIL ACTION NO. 5:23-CV-00052-RWS
	§	[redacted]
ANKER INNOVATIONS, LTD.,	§	
	§	
Defendant.	§	

ORDER

Before the Court are the following motions.

- Defendant Anker Innovations, Ltd.'s Opposed Motion to Stay (Docket No. 165);
- Anker's *Daubert* Motion to Exclude Testimony of Mr. John Jarosz (Docket No. 87);
- Plaintiff Powermat Technologies, Ltd.'s Opposed Motion to Strike and Exclude Certain Testimony and Opinions Offered by Philip W. Kline (Docket No. 90);
- Anker's *Daubert* Motion to Exclude Certain Opinions and Testimony of Dr. Tim Williams (Docket No. 88);
- Anker's Partial Motion for Summary Judgment of Noninfringement of U.S. Patent No. 8,626,461 (Docket No. 85);
- Anker's Partial Motion for Summary Judgment of Noninfringement of U.S. Patent Nos. 9,006,937 and 8,981,598 (Docket No. 86); and
- Powermat's Motion for Summary Judgment of Defendant's Patent Misuse, Unclean Hands, and Damages Defenses (Docket No. 89).

The motions have been fully briefed, and the Court heard argument on September 23, 2025. Docket Nos. 85–90, 97–102, 109–15, 121–26, 165, 168, 171, 175, 181, 182.

BACKGROUND

On June 5, 2023, Plaintiff Powermat filed a patent infringement suit against Defendant Anker. Docket No. 1. Powermat owns several patents that it alleges are essential to the Qi standard, which sets protocols to ensure safety and interoperability in wireless charging devices. *Id.* at ¶¶ 25–26. Powermat contends that Anker's wireless charging products infringe five of Powermat's allegedly Qi standard essential patents, namely, U.S. Patent Nos. 8,626,461 ("the '461 Patent"); 9,048,696 ("the '696 Patent"); 8,981,598 ("the '598 Patent"); 9,006,937 ("the '937 Patent"); and 9,083,204 ("the '204 Patent").[1] *Id.* at ¶¶ 8, 26.

LEGAL STANDARD

I. Motions to Stay

District courts have the inherent power to control their dockets, which includes the power to stay proceedings. *Papst Licensing GmbH & Co., KG v. Apple, Inc.*, No. 6:15-CV-01095-RWS, 2017 WL 11638426, at *2 (E.D. Tex. June 16, 2017). District courts typically consider three factors to determine "whether the benefits of a stay outweigh the inherent costs of postponing resolution of the litigation:"

> (1) whether the stay will unduly prejudice the nonmoving party, (2) whether the proceedings before the court have reached an advanced stage, including whether discovery is complete and a trial date has been set, and (3) whether the stay will likely result in simplifying the case before the court.

NFC Tech. LLC v. HTC Am., Inc., No. 2:13-CV-1058-WCB, 2015 WL 1069111, at *2 (E.D. Tex. Mar. 11, 2015).

II. Motions to Exclude Expert Testimony

Under Federal Rule of Evidence 702, a qualified expert may testify if

[1] Powermat's original complaint, which remains operative, also asserts U.S. Patent Nos. 8,283,812 and 8,049,370. Docket No. 1 at ¶ 8. However, the parties jointly moved to dismiss these claims after the issuance of the Court's *Markman* Order. *See* Docket No. 84 at 1.

> (a) the expert's scientific, technical, or other specialized knowledge will help the trier of fact to understand the evidence or to determine a fact in issue; (b) the testimony is based on sufficient facts or data; (c) the testimony is the product of reliable principles and methods; and (d) the expert's opinion reflects a reliable application of the principles and methods to the facts of the case.

The Federal Rules of Evidence "assign to the trial judge the task of ensuring that an expert's testimony both rests on a reliable foundation and is relevant to the task at hand." *Daubert v. Merrell Dow Pharms., Inc.*, 509 U.S. 579, 597 (1993). "The relevance prong [of *Daubert*] requires the proponent [of the expert testimony] to demonstrate that the expert's 'reasoning or methodology can be properly applied to the facts in issue.' " *Johnson v. Arkema, Inc.*, 685 F.3d 452, 459 (5th Cir. 2012) (quoting *Curtis v. M & S Petroleum, Inc.*, 174 F.3d 661, 668 (5th Cir. 1999)). "The reliability prong mandates that expert opinion 'be grounded in the methods and procedures of science and . . . be more than unsupported speculation or subjective belief.' " *Id.* (quoting *Curtis*, 174 F.3d at 668).

"The proponent need not prove to the judge that the expert's testimony is correct, but she must prove by a preponderance of the evidence that the testimony is reliable." *Id.* (quoting *Moore v. Ashland Chem., Inc.*, 151 F.3d 269, 276 (5th Cir. 1998) (en banc)). At base, "the question of whether the expert is credible or the opinion is correct is generally a question for the fact finder, not the court." *Summit 6, LLC v. Samsung Elecs. Co.*, 802 F.3d 1283, 1296 (Fed. Cir. 2015).

III. Motions for Summary Judgment

Summary judgment exists, in part, "to isolate and dispose of factually unsupported claims or defenses." *Celotex Corp. v. Catrett*, 477 U.S. 317, 323–24 (1986). A court may grant summary judgment when the moving party shows that "there is no genuine dispute as to any material fact and the movant is entitled to judgment as a matter of law." FED. R. CIV. P. 56(a); *see also Celotex*, 477 U.S. at 327. A genuine dispute of material fact exists when "the evidence is such that a reasonable jury could return a verdict for the nonmoving party." *Anderson v. Liberty Lobby, Inc.*,

477 U.S. 242, 248 (1986). "[T]he trial court must resolve all reasonable doubts in favor of the party opposing the motion" for summary judgment. *Casey Enters., Inc. v. Am. Hardware Mut. Ins. Co.*, 655 F.2d 598, 602 (5th Cir. 1981). The substantive law identifies which facts are material. *Anderson*, 477 U.S. at 248.

The party moving for summary judgment "always bears the initial responsibility of . . . demonstrat[ing] the absence of a genuine issue of material fact." *Celotex*, 477 U.S. at 323. The moving party, however, is not required to support its motion with materials negating its opponent's claim where the party in opposition carries the burden of proof at trial. *Id.* at 322–23, 325. Instead, the movant may discharge its burden by showing there is an absence of evidence to support the nonmovant's case. *Id.* at 325; *see also Byers v. Dallas Morning News, Inc.*, 209 F.3d 419, 424 (5th Cir. 2000). Where a nonmoving party that carries the burden of proof at trial fails to make a showing sufficient to establish an essential element of its case in response to a motion for summary judgment, "there can be 'no genuine issue as to any material fact,' since a complete failure of proof concerning an essential element of the nonmoving party's case necessarily renders all other facts immaterial." *Celotex*, 477 U.S. at 322–23.

ANALYSIS

I. Anker's Opposed Motion to Stay (Docket No. 165)

The Court originally set this matter for trial on April 28, 2025. Docket No. 31 at 1. After the briefing of the dispositive motions concluded, the Court entered an order continuing the dispositive motions hearing and the April trial setting until further order of the Court. *See* Docket No. 148. On July 21, 2025, the parties indicated their availability for trial and a rescheduled dispositive motions hearing. Docket No. 164. In that joint notice, Anker indicated that it planned to file a motion to stay the case, *id.*, which it later filed on August 7, 2025, Docket No. 165.

Anker's motion sets forth two grounds that, it contends, justify staying the case. First, Anker argues that proceedings at the Unified Patent Court ("UPC") in Europe will result in the setting of a fair, reasonable, and non-discriminatory ("FRAND") rate for Powermat's global portfolio of patents, which will moot this case. Docket No. 165 at 2–4. Second, Anker posits that final written decisions in *inter partes* review ("IPR") proceedings at the Patent Trial and Appeal Board ("PTAB") will streamline the case, and the Court should postpone trial until the conclusion of those proceedings. *Id.* at 4–7.

Powermat, for its part, contends that the UPC lacks jurisdiction to determine FRAND rates for the U.S. patents in this case. Docket No. 168 at 7–8, 11–13. Further, according to Powermat, granting a stay would be unprecedented given the late stage of the proceedings here and the uncertainty that parallel proceedings at the UPC and before the PTAB will streamline the litigation. *Id.* at 1, 5–15.

In light of the three factors that courts consider in determining whether to stay a case, the Court concludes that a stay is not warranted. *NFC Tech. LLC*, 2015 WL 1069111, at *2. First, granting the motion to stay would unduly prejudice Powermat. A delay in recovering monetary damages prejudices a patentee, even where he or she does not seek injunctive relief. *See, e.g.*, *Netlist, Inc. v. Samsung Elecs. Co.*, No. 2:22-CV-00293-JRG, 2024 WL 6043769, at *2 (E.D. Tex. Mar. 11, 2024) ("The fact that [plaintiff] is seeking solely monetary damages does not mean that [plaintiff] cannot be prejudiced by a significant delay of an imminent trial date."). In addition, Powermat represents that it [redacted] and "has a right to a jury determination that shows potential licensees that they cannot simply use the patents without paying fair compensation." Docket No. 168 at 6 (citing Docket No. 168-6 (Ozluturk Dep.) at 209:6–210:9). While the Court agrees with Anker that delay in the recovery of monetary damages is

generally a less weighty consideration than a delay in obtaining injunctive relief, such delay can prejudice a patentee and does amount to undue prejudice, especially when paired with other considerations such as a licensor's need to demonstrate to prospective licensees that they cannot infringe with impunity. *Cf. Smartflash LLC v. Apple, Inc.*, No. 6:13-CV-447, 2014 WL 3366661, at *5 (E.D. Tex. July 8, 2014) (recognizing that "some prejudice from loss of licensing" along with a delay in seeking monetary damages weighed against granting a stay).

The delay would also be significant. Based on the hearing date at the UPC, Powermat estimates, and Anker does not dispute, that a conservative date for resolution of the UPC proceedings would be May 2026. Docket No. 168 at 9. Staying proceedings until then would alone amount to a significant delay. And should the parties choose to appeal the decisions of the UPC and the IPR decisions from the PTAB, the parties would have to wait significantly longer to try their case here. Delaying trial to await the resolution of these other proceedings would unduly prejudice Powermat, whose trial date was originally set for April 2025.

Anker's arguments to the contrary are inapposite. Anker represents that it posted an [redacted] security bond at the UPC that will protect Powermat in case the related proceedings do not moot the present case. Docket No. 165 at 4–5. However, Anker provides insufficient detail for the Court to assess how that bond amount was set and whether it is sufficient to secure the total amount in damages globally for Anker's past and future infringement, which is the bond's purported purpose. Docket No. 168 at 8 n.2. Similarly, Powermat's alleged delay in filing the present case does not alter the Court's conclusion that Powermat would be prejudiced by further delay in seeking the damages to which it is allegedly entitled. Docket No. 165 at 5.

Second, the case has reached an advanced stage of proceedings, and this factor weighs strongly in favor of denying a stay. Fact discovery and expert discovery have been complete for

several months. *See* Docket No. 80 at 3; Docket No. 75 at 4. In addition, the parties' dispositive motions are fully briefed, and the Court has heard argument on those motions. Docket Nos. 85–90, 97–102, 109–15, 121–26, 181, 182. The parties have also filed motions *in limine* and exchanged exhibit lists and deposition designations. Docket No. 168 at 9–10. Before trial, the parties need only attend the pretrial conference and file responses to the motions *in limine*, a joint final pretrial order, joint proposed jury instructions, a joint proposed verdict form, and a notice of time requested for trial. Procedurally, the case is at a similar stage as *Maxell Ltd. v. Apple Inc.*, in which the Court denied a motion to stay and found that this factor weighed "heavily against a stay." No. 5:19-CV-00036-RWS, 2020 WL 10458088, at *2 (E.D. Tex. Nov. 17, 2020). Anker, for its part, cannot identify a single case that was stayed after reaching such an advanced stage of proceedings. Anker cites *Armor All/STP Products Co. v. Aerospace Communications Holdings Co.*, but, in that case, the parties had not even commenced briefing of dispositive motions. No. 6:15-CV-781, 2016 WL 6397269, at *4 (E.D. Tex. Oct. 28, 2016).

In addition, the fact that Anker (1) waited a year after the filing of this case to file IPRs against some of the asserted patents, and (2) waited two years after the filing of this case to file the present motion also weighs against granting a stay in this case. Docket Nos. 1, 165, 168-9, 168-10, 168-11; *see Stragent, LLC v. BMW of N. Am., LLC*, No. 6:16-CV-446-RWS-KNM, 2017 WL 2839260, at *2 (E.D. Tex. Apr. 20, 2017) ("This factor considers two sub-factors: (1) whether discovery is complete and whether a trial date has been set; and (2) ***whether the movant has unreasonably delayed filing its IPR petition and motion to stay***." (emphasis added)).

Third, it remains speculative whether the UPC and IPR proceedings will simplify the present case. As to the UPC proceedings, Powermat brought two patent suits against Anker in the

UPC in February and March of 2025, asserting two European patents.[2] Docket No. 165 at 1–2. In response to these suits, Anker filed counterclaims, requesting the UPC to determine FRAND rates for Powermat's entire global portfolio. *Id.* at 2. The only relevant case that Anker cites involving a similar counterclaim is *Panasonic Holdings Corp. v. Guangdong OPPO Mobile Telecommunications Corp. Ltd., et al.*, UPC_CFI_210/2023, at *236 *et seq.* (UPC Mannheim Loc. Div. Nov. 22, 2024).[3] Docket No. 165-3 (*Panasonic* Decision). However, in that case, the UPC ultimately dismissed the counterclaim to set a FRAND rate for the European territory that would apply to the United States and Japan as "unfounded" because, among other reasons, the defendants had previously issued counteroffers that were not "FRAND-compliant." *Id.* at ¶¶ 49, 188–236. Given the parties' positions and disputes about the pre-suit FRAND negotiations, *see, e.g.*, Docket No. 89 at 2–7 (describing negotiations), it remains speculative whether the UPC would grant the relief that Anker seeks. In any event, such a decision could be subject to appeal and would not necessarily result in an immediate conclusion to the proceedings here. And, as the Second Circuit observes, "[t]he mere existence of parallel foreign proceedings does not negate the district courts' virtually unflagging obligation . . . to exercise the jurisdiction given them." *Leopard Marine &*

---

[2] Anker represents that only one of the European patents is related to two of the patents-in-suit here, but does not allege that the related European patent has a claim scope that is materially identical to any of the patents-in-suit. Docket No. 165 at 2. The mere fact that Powermat is asserting a related, but distinct, European patent at the UPC does not weigh in favor of granting a stay. *Cf. Lionra Techs. Ltd. v. Cisco Sys., Inc.*, No. 2:24-CV-00097-JRG, 2025 WL 1239317, at *2 (E.D. Tex. Apr. 29, 2025) (holding that a court "is not bound by the [UPC's] decision" especially where the UPC "considered a different patent, under a different standard, and based on different facts").

[3] Anker also cites *Unwired Planet International Ltd. v. Huawei Technologies Co. Ltd., et al.*, [2017] EWHC (Pat), at *169 (EWHC Apr. 5, 2017), but that is a case from the Supreme Court of the United Kingdom. Docket No. 165-4 (*Unwired Planet* Decision). In Anker's highlighted case excerpt, the Supreme Court of the United Kingdom merely discusses how its decision to set a global FRAND rate was consistent with the practice of other courts. *Id.* at ¶¶ 66–84. The Supreme Court of the United Kingdom does not discuss the practice of the UPC.

Trading, Ltd. v. Easy St. Ltd., 896 F.3d 174, 190 (2d Cir. 2018) (internal quotation marks omitted) (quoting *Royal & Sun All. Ins. Co. of Can. v. Century Int'l Arms, Inc.*, 466 F.3d 88, 92 (2d Cir. 2006)).

Because the Court determines that it is unclear whether the UPC proceedings will simplify the present case, the Court need not answer the question of whether the UPC has jurisdiction to set a global FRAND rate over U.S. patents. *Compare Voda v. Cordis Corp.*, 476 F.3d 887, 903 (Fed. Cir. 2007) ("Foreign courts exercising jurisdiction over claims based on U.S. patents would destroy Congress's intent to foster uniformity and to preclude forum shopping."), *with Telefonaktiebolaget LM Ericsson v. Lenovo (United States), Inc.*, 120 F.4th 864, 878 (Fed. Cir. 2024) ("Ericsson entered into a contract that affects how it may enforce certain of its patents. 'When that contract is enforced by a U.S. court, the U.S. court is not enforcing [foreign] patent law but, rather, the private law of the contract between the parties.' " (quoting *Microsoft Corp. v. Motorola, Inc.*, 696 F.3d 872, 884 (9th Cir. 2012))).

Similarly, it is uncertain to what extent final written decisions in the IPRs will simplify the proceedings. Only three of the five asserted patents are subject to IPRs. Docket No. 165 at 1. Final written decisions are due against one of the asserted patents on December 10, 2025 and against the other two asserted patents on February 20, 2026. *Id.* at 2. However, whether the IPR proceedings will ultimately streamline this case remains "far from a certainty," given the lack of clarity as to whether the PTAB will invalidate all the asserted claims of each challenged patent and whether the Federal Circuit will subsequently affirm any invalidation decisions. *Lionra Techs. Ltd. v. Cisco Sys., Inc.*, No. 2:24-CV-00097-JRG, 2025 WL 1239317, at *4 (E.D. Tex. Apr. 29, 2025). Moreover, a trial may be required even if all the asserted claims of the three patents are found invalid by the PTAB, given that the two other asserted patents are not subject to IPRs.

* * *

Accordingly, all three factors weigh against staying the case, and the Court concludes that a stay is not warranted. For the foregoing reasons, Anker's Opposed Motion to Stay (Docket No. 165) is **DENIED**.

The Court hereby **ORDERS** that this case shall proceed to trial according to the following schedule of deadlines.

Jury Trial	February 2, 2026 immediately following jury selection in Texarkana, Texas
Jury Selection	February 2, 2026 at 9 a.m. in Texarkana, Texas
Pre-trial Conference	January 13, 2026 at 10 a.m. in Texarkana, Texas

It is further

ORDERED that, **within seven (7) days** of the entry of this Order, the parties shall submit a joint proposed docket control order that incorporates these deadlines along with any additional deadlines agreed on by the parties. The amended docket control order should include deadlines to file the proposed joint final pretrial order, responses to motions *in limine*, joint proposed jury instructions, a joint proposed verdict form, and a notice of time requested for trial.

II. Anker's *Daubert* Motion to Exclude Testimony of Mr. John Jarosz (Docket No. 87)

Anker argues that the Court should exclude opinions offered by Powermat's damages expert, John Jarosz, regarding four topics: (1) a royalty rate based on licenses of Powermat's Qi standard patent portfolio (Scenario 1); (2) a royalty rate based on the asserted patents' pro-rated value within Powermat's Qi standard patent portfolio (Scenario 2); (3) an opinion that a multiplier of two should apply to the pro-rated royalty rate in Scenario 2 (Scenario 3); and (4) estimates of Anker's profits used in the context of an incremental benefit approach and a design-around cost approach. Docket No. 87.

The Court examines each topic that Anker seeks to exclude in turn.

A. Scenario 1

Anker argues that Mr. Jarosz's opinions on the Scenario 1 royalty rate should be excluded because they do not "account for differences in the technologies and economic circumstances of the contracting parties" and instead rely on [redacted] that reflect the rates offered by Powermat when licensing its entire Qi standard patent portfolio. Docket No. 87 at 4 (quoting *Apple Inc. v. Wi-LAN Inc.*, 25 F.4th 960, 971 (Fed. Cir. 2022)). Moreover, Anker contends that the royalty rate is not apportioned to each patent, and, based on Mr. Jarosz's methodology, the same royalty rate would apply no matter how many patents are found to be not invalid and infringed. *Id.* at 4–5. According to Anker, "Mr. Jarosz admit[ted] he did not evaluate any of Powermat's other patents or assess the relative value of the asserted patents to the portfolio-wide licenses he alleges are comparable." *Id.* at 5 (citing Docket No. 87-3 (Jarosz Dep.) at 31:20–32:5).

In response, Powermat argues that Mr. Jarosz's Scenario 1 opinions are the product of sound analysis based on analogous license agreements. Docket No. 100 at 1–2. Powermat further contends that, contrary to Anker's arguments, Mr. Jarosz did conduct a detailed analysis under the *Georgia-Pacific* factors to assess whether the base portfolio rate should be adjusted. *Id.* at 1–2, 8. Moreover, according to Powermat, additional apportionment of the portfolio rate was not warranted, given that Powermat [redacted], and Powermat's Head of Licensing, Dr. Fatih Ozluturk, understood the asserted patents to be "[redacted]. *Id.* at 9.

Contrary to Anker's arguments, Mr. Jarosz's Scenario 1 opinions are the product of a sufficiently reliable methodology. Mr. Jarosz arrived at his Scenario 1 royalty rate by analyzing the over [redacted] licenses produced by the parties in this case. *See* Docket No. 100-2 (Jarosz Report) at ¶¶ 117–93. Based on that analysis, he determined that 23 of those licenses were the most

comparable to the hypothetical negotiation here. *Id.* at ¶¶ 182–84. In those 23 licenses, Powermat [redacted]. *Id.* at ¶¶ 20, 183. Each of those licenses covered [redacted]. *Id.* at ¶ 160; Docket No. 100 at 12 (citing Docket No. 100-2 (Jarosz Report) at ¶¶ 180–92).

In the context of those 23 licenses and Powermat's wireless charging portfolio, Mr. Jarosz evaluates the importance of the five asserted patents. Based on the report of Powermat's technical expert, Dr. Tim Williams, Mr. Jarosz explains "that the main benefits of the [asserted patents] are fast and efficient wireless charging and improved safety." Docket No. 100-2 (Jarosz Report) at ¶¶ 23–27 (emphasis removed). In addition, Mr. Jarosz relies on Dr. Ozluturk and Dr. Williams's representations that the asserted patents were "foundational (or core) to wireless charging products" and that there are no non-infringing alternatives to the asserted patents. *Id.* at ¶¶ 52–53. Further, Mr. Jarosz's opinions were informed by the fact that two of the five asserted patents "ha[d] been asserted in prior litigation." *Id.* at ¶ 53. Relying on the testimony of Dr. Williams, as well as conversations with Dr. Ozluturk, Mr. Jarosz opines that the five asserted patents are among the top [redacted] most valuable in Powermat's U.S. portfolio. *Id.* at ¶¶ 52, 205.

Mr. Jarosz also assessed Powermat's licensing practices to evaluate the dynamics of the hypothetical negotiation. In licensing its wireless charging portfolio, Mr. Jarosz opines that, historically, Powermat always opted to license [redacted]. *Id.* at ¶ 196.

In consideration of the importance of the asserted patents and Powermat's licensing practices, Mr. Jarosz concluded that in a hypothetical negotiation Powermat would have licensed the five asserted patents at the same rate as it licensed its entire portfolio of wireless charging

patents. *Id.* Moreover, that rate would apply regardless of whether one or more of the patents were to be adjudged not invalid and infringed. *Id.* Finally, Mr. Jarosz considered whether to downwardly or upwardly depart from his reasonable royalty rate in light of the *Georgia-Pacific* factors, among other considerations, including:

> the RAND context of the prior licenses; the uncertainty and litigation risk baked into the prior licenses; the cross-licenses and grant-backs given by the licensees; the larger set of patents granted by Powermat in the prior licenses; the worldwide nature of the prior licenses; Anker's reliance on and benefits and profits from the covered inventions; and industry customary rates as specifically adjusted to Powermat's position.

Docket No. 100 at 8 (citing Docket No. 100-2 (Jarosz Report) at ¶¶ 183–93, 237–310); *see also* Docket No. 100-2 (Jarosz Report) at ¶¶ 180–99. Ultimately, he found such adjustment unwarranted. Docket No. 100-2 (Jarosz Report) at ¶¶ 305–06.

Contrary to Anker's arguments, Mr. Jarosz does offer reliable opinions that the allegedly comparable agreements are apportioned to the inventions claimed in the asserted patents. Mr. Jarosz's opinions are not legally improper merely because he determines that the reasonable royalty rate should be equivalent to the rate that Powermat offers when licensing its entire wireless charging portfolio. This Court, along with other courts in this District, has determined that an expert who "relies on sufficiently comparable licenses" has adequately apportioned the value of the patented technology in the comparable license to the hypothetical negotiation, even where the comparable licenses covered unasserted patents or non-infringing features. *VirnetX Inc. v. Apple Inc.*, No. 6:12-CV-00855-RWS, 2020 WL 11714546, at *1–2 (E.D. Tex. Sept. 1, 2020) (refusing to exclude expert's opinion that the same royalty rate would apply even though an accused feature covered by the allegedly comparable license was determined not to infringe); *Atlas Glob. Techs. LLC v. TP-Link Techs. Co.*, No. 2:21-CV-00430-JRG-RSP, 2023 WL 5054418, at *2–3 (E.D. Tex. Aug. 8, 2023) (declining to exclude expert testimony that the reasonable royalty rate for five

asserted patents should be equivalent to the standard essential patent portfolio rate); *Alacritech Inc. v. CenturyLink, Inc.*, No. 2:16-CV-00693-RWS-RSP, 2023 WL 6553832, at *3–5 (E.D. Tex. Oct. 8, 2023) (concluding that an expert adequately considered agreements with "built-in apportionment" where the expert opined that the comparable agreements were "both technically comparable . . . and economically comparable," and the scope of the comparable licenses was limited to a particular technology).

In *Vectura Ltd. v. Glaxosmithkline LLC*, the Federal Circuit drew a similar conclusion. 981 F.3d 1030, 1041 (Fed. Cir. 2020). In that case, the Federal Circuit upheld a damages verdict where an expert testified that a hypothetical negotiation involving only one asserted patent was comparable to a prior license between the litigants that "encompassed rights to more than 400 patents." *Id.* Despite the disparity in the number of patents involved, the court nevertheless determined that sufficient evidence had been presented for the jury to conclude that apportionment was "baked into" the prior license. *Id.* Namely, the patentee presented evidence that "the key component of the [prior] license was permitting [the defendant] to use [the plaintiff's] invention of coating lactose particles with magnesium stearate." *Id.* On this basis, the patentee's damages expert testified that the prior license and "the hypothetical negotiation thus cover 'roughly very similar technologies.' " *Id.* And the fact that the prior license and the asserted patent covered the same mixtures further confirmed the similarity in technology. *Id.*

Here, Mr. Jarosz adequately opines that the prior portfolio licenses that cover wireless charging devices compliant with the Qi standard are comparable, and his opinions on these licenses reflect built-in apportionment. Mr. Jarosz relies on testimony from Dr. Ozluturk and Dr. Williams that the asserted patents are foundational and core to the Qi standard. Docket No. 100-2 (Jarosz Report) at ¶¶ 52–53. He further considers conversations with Dr. Ozluturk to determine that the

five asserted patents [redacted]. *Id.* at ¶ 52. Mr. Jarosz also assessed whether to adjust his reasonable royalty rate in light of the *Georgia-Pacific* factors. *Id.* at ¶¶ 183–93, 237–310. As in *Vectura*, Mr. Jarosz presents opinions that the asserted patents cover the same technology as encompassed by the allegedly comparable licenses, namely, Qi standard-compliant wireless charging. *Id.* at ¶¶ 183, 197–99. In addition, Mr. Jarosz considered the economic circumstances of the contracting parties, including that, historically, Powermat always opted to [redacted]. *Id.* at ¶ 196. Mr. Jarosz has adequately apportioned the value of the Qi standard essential patents asserted here to the value of the wireless charging Qi portfolio that was covered by the allegedly comparable licenses. While "[t]here may be questions regarding the correctness of . . . [Mr. Jarosz's] reasonable royalty results, . . . assessments as to credibility and correctness are for the factfinder, not the Court." *Alacritech*, 2023 WL 6553832, at *5.

Anker argues that several other cases require the opposite result. Docket No. 87 at 4–5; Docket No. 113 at 2–3. Although Anker identifies cases in which the Federal Circuit upheld the granting of a *Daubert* motion under the deferential abuse of discretion standard of review, *see, e.g.*, *MLC Intell. Prop., LLC v. Micron Tech., Inc.*, 10 F.4th 1358, 1375 (Fed. Cir. 2021), Anker identifies no analogous cases in which a court excluded an expert's testimony.

Anker cites the out-of-circuit *Golden Bridge Technology v. Apple Inc.* decision. No. 5:12-CV-04882-PSG, 2014 WL 4057187 (N.D. Cal. June 1, 2014). But that case is distinguishable. In *Golden Bridge*, the court excluded testimony from an expert who opined that a license was comparable that encompassed multiple different technical standards, and the asserted patent was only allegedly essential to one of the licensed standards. *Id.* at *1 & n.1. The expert in that case

made no effort to evaluate the relative value of the different standards that were covered by the license. *Id.* at *1–2. Here, unlike in *Golden Bridge*, the allegedly comparable licenses are only purported to encompass patents covering Qi standard-compliant wireless charging technology, and Powermat contends that each of the asserted patents is a Qi standard essential patent. Docket No. 100-2 (Jarosz Report) at ¶¶ 183, 197–99.

The Federal Circuit cases that Anker relies on similarly do not mandate a different result. In *MLC Intellectual Property, LLC v. Micron Technology, Inc.*, the Federal Circuit upheld a district court's decision to exclude expert testimony regarding two allegedly comparable licenses, one of which "granted a license to a portfolio of forty-one U.S. and international patents and patent applications." 10 F.4th 1358, 1375 (Fed. Cir. 2021). In doing so, the Federal Circuit relied on the fact that the expert "provided no evidence or explanation for how [his proposed] royalty rate he derived from the Hynix agreement accounts for apportionment of Micron's accused products." *Id.* at 1374–75. Here, as already described above, Mr. Jarosz adequately explains why the allegedly comparable licenses account for apportionment. *See supra* at 14–15.

Apple Inc. v. Wi-LAN Inc. also does not upset the Court's conclusion. 25 F.4th 960 (Fed. Cir. 2022). Although *Wi-LAN Inc.* reversed the district court's decision to deny a motion for a new trial on damages, the Federal Circuit premised its reasoning primarily on the fact that the record evidence indisputably belied the patentee damages expert's position that the two asserted patents were among the key patents in the allegedly comparable licenses. *Id.* at 971, 973. Such considerations, while pertinent in post-trial motions, are rarely appropriate in determining the admissibility of expert testimony. *Cf. Alacritech*, 2023 WL 6553832, at *5 (explaining that "assessments as to credibility and correctness are for the factfinder"). In any event, at this stage,

Anker has not adequately developed a record to conclusively demonstrate that the asserted patents are not among the most valuable in Powermat's portfolio.

Finally, in *Omega Patents, LLC v. CalAmp Corp.*, the Federal Circuit granted a new trial on damages. 13 F.4th 1361, 1379 (Fed. Cir. 2021). In doing so, the court held that testimony from the patentee's damages expert that "whether it's one patent or all the patents, the way that Omega licenses them is, it's five bucks" was insufficient to support the $5 royalty rate found by the jury. *Id.* However, *Omega* is distinguishable. That case involved the Federal Circuit reviewing the sufficiency of evidence post-trial. *Id.* at 1382. The Federal Circuit did not determine whether the damages expert's opinions would have been admissible.

Moreover, Mr. Jarosz's testimony does not run afoul of any of the legal principles enunciated in *Omega*. In that case's fact-driven analysis of the trial evidence, the Federal Circuit held that the allegedly comparable licenses based on the $5 royalty rate lacked built-in apportionment because "Omega sought the same licensing fee ***regardless*** of what patents were included or ***what technology was covered***." *Id.* at 1379 (emphasis added). Unlike in *Omega*, here, Mr. Jarosz opines that the Qi standard portfolio rate should apply because (1) the asserted patents are essential to the Qi standard; (2) the asserted patents are among the [redacted] patents in Powermat's Qi standard wireless charging portfolio; and (3) it's Powermat's practice to license its patents covering Qi standard-compliant wireless charging technology [redacted]. *See supra* at 14–15. Mr. Jarosz offers and relies on opinions that Powermat's Qi standard portfolio rate is tethered to the technology of the patents-in-suit; he does not rely on a rate that Powermat offers regardless of what technology is licensed.

B. Scenario 2

Anker posits that Mr. Jarosz's Scenario 2 opinions are unfounded. Docket No. 87 at 7. In particular, Anker argues that Mr. Jarosz improperly "parrots" an employee of Powermat, Dr. Fatih

Ozluturk, who, without evidence, states that the asserted patents are among the top [redacted] percent most valuable in Powermat's patent portfolio. *Id.* at 7–8. In Anker's retelling, Mr. Jarosz then contends, based on an academic article, that the top [redacted] percent of patents would be worth [redacted] percent of the value of the entire portfolio. *Id.* at 7. He appraises each of the five asserted patents as being worth one-[redacted] of [redacted] percent of the portfolio rate—*i.e.*, [redacted] percent—because there are eight patents in the top [redacted] percent of the patents in the portfolio. *Id.* Anker maintains that such opinions do not reflect the application of a reliable methodology, especially considering that Dr. Ozluturk was not designated as an expert witness. *Id.* at 8–11. Anker also notes that Dr. Ozluturk himself testified that he never " 'made any valuation analysis on individual patents,' and that 'it's possible that some . . . have more economic value than the others [but] I haven't done that analysis.' " *Id.* at 9 (citing Docket No. 87-6 (Ozluturk Dep.) at 183:23–184:7).

For its part, Powermat argues that Mr. Jarosz's estimates of the value of each individual patent are sound. Docket No. 100 at 10–11. Powermat further explains that Mr. Jarosz's opinions are based on (1) Dr. Williams's testimony that "the technology was 'core' and 'foundational,' " *id.* at 11; (2) "[a] well-known 'body of work that derives patent valuations from patentees' optimizing behavior,' " *id.* (quoting Docket No. 100-2 (Jarosz Report) at ¶ 205 n.477); and (3) "facts provided about Powermat's portfolio and licensing positions from Powermat's Head of Licensing Dr. Ozluturk," *id.* According to Powermat, the fact that Mr. Jarosz relies on conversations with Dr. Ozluturk to support his Scenario 2 opinions does not disqualify such testimony. *Id.* at 11.

Again, the Court determines that Mr. Jarosz's opinions are sufficiently reliable to warrant admission at trial. Notably, "estimating a reasonable royalty is not an exact science." *Summit 6*, 802 F.3d at 1296. In formulating his Scenario 2 opinions, Mr. Jarosz considered the testimony of

Dr. Williams that each of the asserted patents is essential to practicing the Qi standard. Docket No. 100-2 (Jarosz Report) at ¶ 52. He relies on conversations with Dr. Ozluturk—who, as the Head of Licensing, may be among the most knowledgeable people regarding the relative value of Powermat's patents—to establish that the technology claimed in the asserted patents is foundational to wireless charging products and to determine that the asserted patents are among the top [redacted] percent most valuable in Powermat's portfolio. *Id.* Mr. Jarosz then refers to academic scholarship on patent valuation within portfolios to inform what share of the value the asserted patents hold within a typical portfolio distribution. *Id.* at ¶ 204–06. These methods are sufficiently sound to pass over the *Daubert* hurdle. The deficiencies that Anker identifies do not alter the admissibility of Mr. Jarosz's Scenario 2 opinions; they are merely fodder for cross-examination at trial. *Daubert*, 509 U.S. at 596.

Anker puts forth two Federal Circuit cases that, it contends, require a different result, but neither is apposite. Docket No. 87 at 10–11. First, *Apple Inc. v. Wi-LAN Inc.* is distinguishable for the same reasons articulated in the Court's analysis of Mr. Jarosz's Scenario 1 opinions. *See supra* Section II.A.

Second, *Apple Inc. v. Motorola, Inc.* similarly does not move the needle. 757 F.3d 1286 (Fed. Cir. 2014), *overruled on other grounds by Williamson v. Citrix Online, LLC*, 792 F.3d 1339 (Fed. Cir. 2015). In that case, the Federal Circuit, applying the deferential abuse of discretion standard, affirmed-in-part and reversed-in-part a district court's decision to exclude testimony of a patentee's damages expert. *Id.* at 1324–26. The patentee's damages expert opined that the asserted patents, which were essential to a technical standard, were worth 40–50 percent of the standard essential patent portfolio rate offered by the patentee. *Id.* at 1324. The Federal Circuit concluded that the expert's testimony was "inherently unreliable based on his failure to tie the

40%–50% rate to the technological contribution of the patent to the standard-essential patent portfolio." *Id.* Notably, this was true because the expert "admitted that he knew nothing about the [standard essential patent] portfolio at issue and did not even purport to link the 40%–50% rate to the claimed invention." *Id.* at 1324–25. The theory that the asserted patents would fetch 40–50 percent was premised entirely on market dynamics in licensing standard essential patents and bore no nexus to the identity of the asserted patents or the technology covered by them. *Id.* at 1323–24. To the contrary, here, Mr. Jarosz bases his Scenario 2 opinions on the testimony of Powermat's technical expert, Dr. Williams, regarding the technical benefits and importance of the asserted patents. *See, e.g.*, Docket No. 100-2 (Jarosz Report) at ¶¶ 23–27, 52. Further, Mr. Jarosz relies on conversations with Powermat's Head of Licensing about the relative value of the asserted patents within Powermat's wireless charging portfolio to support his Scenario 2 theory. *Id.* at ¶ 52.

Anker makes much of the fact that Powermat did not designate Dr. Ozluturk as an expert witness and argues that Powermat may not use Mr. Jarosz as a mere "mouthpiece" for Dr. Ozluturk's inadmissible opinions. Docket No. 87 at 10 (citing *Factory Mut. Ins. Co. v. Alon USA L.P.*, 705 F.3d 518, 524 (5th Cir. 2013)); *see also* Docket No. 113 at 4–5. However, an expert may rely on hearsay and other forms of inadmissible evidence in forming his or her opinions "[i]f experts in the particular field would reasonably rely on those kinds of facts or data in forming an opinion on the subject." FED. R. EVID. 703. As the Head of Licensing at Powermat, Dr. Ozluturk may have special insight into the valuation of the patents in Powermat's portfolio, and an expert in the field of patent damages could reasonably rely on his opinion in valuing patents in that portfolio. *See, e.g.*, *Genband US LLC v. Metaswitch Networks Corp.*, No. 2:14-CV-33-JRG-RSP, 2016 WL 125503, at *3 (E.D. Tex. Jan. 9, 2016) (declining to exclude expert opinions that were based on discussions with the patentee's employees).

Anker's reliance on *Factory Mutual Insurance Co. v. Alon USA L.P.*, 705 F.3d 518 (5th Cir. 2013), is misplaced. The Fifth Circuit determined in that case that an expert witness cannot merely serve as "the mouthpiece of the witnesses on whose statements or opinions the expert purports to base his own opinion." *Id.* at 524 (quoting *Loeffel Steel Prods., Inc. v. Delta Brands, Inc.*, 387 F. Supp. 2d 794, 808 (N.D. Ill. 2005)). However, Mr. Jarosz does more than that. Although he relies in part on Dr. Ozluturk's assessment of the relative value of the asserted patents, he determines a reasonable royalty rate based on Dr. Ozluturk's estimates in light of academic literature about the value distribution in patent portfolios and input from Dr. Williams. *See supra* at 18–19. The Western District of Texas has distinguished *Factory Mutual* on similar grounds. *See Wavetronix LLC v. Iteris, Inc.*, No. 1:24-CV-00190-ADA-DTG, 2024 WL 5707764, at *3 (W.D. Tex. Sept. 12, 2024). In *Wavetronix*, the court declined to exclude the plaintiff expert's testimony that was rendered in reliance on interviews with the plaintiff's employees. *Id. Wavetronix* rejected the defendant's arguments that the plaintiff's expert acted as a mere mouthpiece for the plaintiff's employees because the expert did not merely regurgitate the views of the employees. *Id.* Rather, the employees "provided information about several of the factors that [the plaintiff's expert] took into account in forming his opinion." *Id.* The court determined that "[i]t is entirely appropriate for an expert to interview employees in forming an opinion," and "[w]hether [the plaintiff's expert] considered the interviews of employees to the detriment of other data goes to the weight of his testimony and can be addressed on cross-examination." *Id.* Here, Dr. Ozluturk's input is but one factor, among others, that Mr. Jarosz considered in forming his Scenario 2 opinions.[4] *See supra* at

[4] Anker identifies several other cases in its briefing that, it contends, require a different result. Docket No. 113 at 4–5. However, each of those cases is distinguishable for substantially the same reasons outlined here.

18–19. And whether Mr. Jarosz unduly relied on Dr. Ozluturk is a concern that Anker can address through vigorous cross-examination. *Daubert*, 509 U.S. at 596.

Anker's citations to Dr. Ozluturk's Rule 30(b)(6) deposition testimony similarly do not alter the Court's conclusion. *See* Docket No. 87 at 9. During his deposition, on October 10, 2024, Dr. Ozluturk admitted that he had not "made a valuation analysis on [the] individual patents [asserted in this case]," and he explained that "it's possible that some [patents] . . . have more economic value than the others. . . . I haven't done that analysis." Docket No. 87-6 (Ozluturk Dep.) at 183:23–184:7. Subsequently, Mr. Jarosz's opening expert report issued 15 days later on October 25, 2024, in which Mr. Jarosz relies on Dr. Ozluturk's assessment of the relative value of the asserted patents compared to Powermat's Qi portfolio. *See* Docket No. 100-2 (Jarosz Report) at ¶ 52. Dr. Ozluturk's admission does not plainly contradict or render wholly implausible Mr. Jarosz's opinions. *Cf. United Servs. Auto. Ass'n v. Wells Fargo Bank, N.A.*, No. 2:18-CV-00366-JRG-RSP, 2019 WL 6896674, at *1 (E.D. Tex. Dec. 18, 2019) (refusing to exclude expert's opinions even if they were "directly contradictory" to a Rule 30(b)(6) witness's testimony). To the extent that Dr. Ozluturk's admission diminishes the credibility of Mr. Jarosz's Scenario 2 opinions, such deficiencies can be addressed via cross-examination. *Daubert*, 509 U.S. at 596.

C. Scenario 3

Anker also challenges Mr. Jarosz's Scenario 3 opinions that apply a multiplier of two to the Scenario 2 royalty rate. Docket No. 87 at 7–8, 11. Anker posits that Mr. Jarosz again improperly relied on Dr. Ozluturk to devise this theory. *Id.* at 11.

In response, Powermat points to cases in which higher multipliers were used to account for the absence of litigation risks and costs in a hypothetical negotiation. Docket No. 100 at 13–14. Powermat further notes that the multiplier here was not plucked out of thin air. *Id.* at 14. Instead,

the multiplier was derived based on Dr. Ozluturk's advice and is supported by academic literature on patent valuation. *Id.*

The Court agrees with Powermat that Mr. Jarosz's Scenario 3 opinions are admissible. The construct of the hypothetical negotiation is a fiction in which it is assumed that both counterparties are aware that the patents that are the subject of the hypothetical license are valid and would be infringed absent the license. *Mondis Tech., Ltd. v. LG Elecs., Inc.*, No. 2:07-CV-565-TJW-CE, 2011 WL 2417367, at *4 (E.D. Tex. June 14, 2011). In real world negotiations, parties negotiate licenses in acknowledgment of the risks that the patents being licensed may be invalid or the licensee may not actually infringe the patents covered by the license. *See id.* Accordingly, courts and academic literature recognize that patent damages may skew higher, as compared to real world licenses, to account for the risks of invalidation or non-infringement present in real world negotiations. *See, e.g.*, *id.* Indeed, courts have allowed experts to present testimony regarding larger multipliers than a factor of two. *See id.* at *4–5 (declining to exclude expert testimony that applied a multiplier of three and citing other cases in which multipliers of three, five, and fifteen were permitted).

Considering these precepts, Mr. Jarosz applies a multiplier of two based on the advice of Dr. Ozluturk as well as academic literature on the valuation of patent licenses. Docket No. 100-2 (Jarosz Report) at ¶¶ 208–11 & n.486–87. Accordingly, Mr. Jarosz's Scenario 3 opinions are sufficiently reliable to be admissible, and it is for the jury to assess the credibility of his conclusions.

Anker's arguments to the contrary hinge on Mr. Jarosz's reliance on Dr. Ozluturk to formulate the multiplier of two theory. Docket No. 113 at 4. However, Mr. Jarosz did not only rely on Dr. Ozluturk. Mr. Jarosz also cited an academic article in which a multiplier of two was

suggested as a conservative corrective factor for the uncertainty surrounding a hypothetical negotiation. Docket No. 100-2 (Jarosz Report) at ¶ 208 n.486. Under these facts, the Court is not convinced that Mr. Jarosz arrived at the factor of two by abdicating his independent judgment as an expert.

D. Alleged Profits

Anker contends that Mr. Jarosz's testimony on Anker's alleged profits in the context of his incremental benefit and design-around cost opinions should be excluded. Docket No. 87 at 12–13. Anker further argues that these figures are irrelevant because Mr. Jarosz admits that his incremental benefit and design-around cost opinions do not provide an independent basis to determine a reasonable royalty. *Id.*

In response, Powermat argues that Anker is incorrect that profit and sales information must be excluded and that the cases relied on by Anker raise unique issues not present here. Docket No. 100 at 14–15.

Mr. Jarosz's theories based on Anker's alleged profits are inadmissible. Mr. Jarosz estimates a profit figure of [redacted] is attributable to Anker's infringing sales, and he uses that figure in his design-around cost and incremental benefit approaches to assess how reasonable his reasonable royalty estimations are. Docket No. 100-2 (Jarosz Report) at ¶¶ 105–13, 219–33, 235. This figure dwarfs the damages that Powermat seeks. If all the asserted patents were found not invalid and all the accused products infringed each of the asserted patents, then, under Mr. Jarosz's opinions, the maximum that Powermat could recover would be $3,045,335. *Id.* at ¶ 308. In addition, Mr. Jarosz admitted that the theories involving these large numbers do not constitute independent bases for determining a reasonable royalty rate. Docket No. 87-3 (Jarosz Dep.) at 42:5–15, 164:6–11, 167:5–11, 169:24–170:20. Accordingly, the Court concludes that the alleged figures for past profits would not be helpful to the jury and could only improperly skew the jury's

damages horizon. *Uniloc USA, Inc. v. Microsoft Corp.*, 632 F.3d 1292, 1320 (Fed. Cir. 2011) (holding that a "disclosure that a company has made $19 billion dollars in revenue from an infringing product cannot help but skew the damages horizon for the jury"); *VLSI Tech. LLC v. Intel Corp.*, 87 F.4th 1332, 1349 (Fed. Cir. 2023) ("We expect that, on remand, there will be no recurrence of comparable references, to sports-team prices or other facts about size of a proposed award alone (one way or the other), not focused on answering the question of the value of the specific technology at issue.").

In arguing to the contrary, Powermat inaptly contends that two cases from this District are analogous. First, Powermat contends that *GREE, Inc. v. Supercell Oy* rejected similar arguments as an attempt "to prevent [the patentee] from putting on a damages case." Docket No. 100 at 15 (quoting No. 2:19-CV-00070-JRG-RSP, 2020 WL 4057640, at *8 (E.D. Tex. July 20, 2020)). However, in *GREE*, all the patentee damages expert's theories used the accused infringer's revenues as a royalty base from which to calculate a reasonable royalty rate. *Id.* at *1–2, *8. Here, Mr. Jarosz relies on comparable licenses to determine a royalty rate. *See supra* Sections II.A, II.B, II.C. He does not invoke Anker's alleged profits as an independent basis to calculate a royalty rate. To exclude Mr. Jarosz's opinions on Anker's alleged profits would not effectively bar Powermat "from putting on a damages case." *GREE*, 2020 WL 4057640, at *8.

Second, Powermat argues that *National Oilwell DHT, L.P. v. Amega West Services, LLC* demonstrates that concerns that testimony would "skew the damages horizon for the jury" are not a "legal basis for excluding otherwise admissible expert testimony on damages." Docket No. 100 at 15 (quoting No. 2:14-CV-1020, 2020 WL 1692959, at *2 (E.D. Tex. Apr. 7, 2020)). *National Oilwell* involved an expert opining on a lost profits theory that resulted in a "multi-million dollar damages figure." *Id.* Unlike with the lost profits theory at issue in *National Oilwell*, Mr. Jarosz's

incremental benefit and design-around cost approaches do not provide an independent basis for him to devise a damages figure. *See supra* at 24.

* * *

Accordingly, Anker's *Daubert* Motion to Exclude Testimony of Mr. John Jarosz (Docket No. 87) is **GRANTED-IN-PART** with respect to Mr. Jarosz's opinions regarding Anker's alleged profits, including his design-around cost and incremental benefit approaches, (Docket No. 100-2 (Jarosz Report) at ¶¶ 105–13, 219–33, 235–36, 267, 304, 329) and otherwise **DENIED-IN-PART**.

III. Powermat's Opposed Motion to Strike and Exclude Certain Testimony and Opinions Offered by Philip W. Kline (Docket No. 90)

Powermat argues that the Court should strike and exclude testimony and opinions offered by Anker's damages expert, Philip Kline, regarding five different topics: (1) his analysis of Powermat's agreements with [redacted]; (2) his "novel" weighted-average approach; (3) royalty stacking; (4) his suppositions about non-infringing alternatives; and (5) his opinion that damages should be paid as a lump sum rather than a running royalty. Docket No. 90 at 2–15.

In response, Anker argues generally that Powermat's arguments regarding Mr. Kline's opinions go to the weight, rather than the admissibility, of his testimony, and any disputes as to his credibility should be left for the jury to resolve. Docket No. 98 at 4–5.

The Court will examine each of the disputed categories of testimony individually.

A. [redacted] Agreements

Powermat argues that Mr. Kline's opinions about two agreements between Powermat and [redacted] are not reliable because he does not adequately account for differences between the two agreements and the hypothetical negotiation here. Docket No. 90 at 3–4. According to Powermat, the [redacted] agreements were "unique collaboration[s]." *Id.* at 4. For example, the first of these

agreements ("the Collaboration Agreement") obligated [redacted] to promote the now-defunct Power Matters Alliance standard that Powermat championed. *Id.* at 3–5. Powermat also argues that Mr. Kline failed to adequately consider the differences in size and market share between [redacted] and Anker. *Id.* at 7. Powermat further contends that Mr. Kline misinterprets the [redacted] agreements because (1) with respect to the Collaboration Agreement with [redacted] he allocated his royalty rate based on sales of [redacted], but in reality, the royalty rate only applied to [redacted], *id.* at 9; and (2) regarding the second agreement with [redacted] ("the [redacted] Agreement"), Mr. Kline (a) again weights the rate based on sales of [redacted], (b) calculates a rate that is at odds with his calculations regarding the Collaboration Agreement, and (c) improperly converts a [redacted] into a [redacted], *id.* at 11–12.

Anker counters that the [redacted] agreements were especially comparable because "they [redacted]" Docket No. 98 at 2 (citing Docket No. 98-2 (Kline Report) at ¶¶ 108, 133–35, 147, 159). According to Anker, Mr. Kline did evaluate the synergistic elements of the Collaboration Agreement, and the 2020 [redacted] Agreement was particularly comparable because it was a [redacted] license that lacked such elements. *Id.* at 5–6. Anker further contends that the [redacted] license agreements [redacted] even though they only allocated the royalty rate based on [redacted]. *Id.* at 8. According to Anker, considering [redacted] in computing an effective royalty rate reflected a sound methodology. *Id.* at 9. Moreover, Anker argues that using "projected

future sales, unpacking methodology, and rate blending to isolate an effective royalty rate for transmitters alone has been endorsed by numerous courts in the SEP context." *Id.* (citing *TCL Commc'n Tech. Holdings, Ltd. v. Telefonaktiebolaget LM Ericsson*, No. CV 15-2370-JVS, 2018 WL 4488286, at *29–46 (C.D. Cal. Sept. 14, 2018), *rev'd in part, vacated in part*, 943 F.3d 1360 (Fed. Cir. 2019)).

Mr. Kline's opinions on this score are sufficiently tied to the facts of the case and reflect a reliable application of his methods. Powermat's "disagreements are with the conclusions reached by [Anker's] expert and the factual assumptions and considerations underlying those conclusions, not his methodology." *ActiveVideo Networks, Inc. v. Verizon Commc'ns, Inc.*, 694 F.3d 1312, 1333 (Fed. Cir. 2012). Accordingly, these opinions should not be excluded. Powermat's gripes with Mr. Kline's assessment of the [redacted] agreements can be addressed on cross-examination. *Daubert*, 509 U.S. at 596.

B. Weighted-Average Approach

Powermat contends that Mr. Kline's novel weighted-average of different licenses, *i.e.*, an average that is weighted based on the number of units licensed, is unreliable. Docket No. 90 at 12–13.

In response, Anker argues that Mr. Kline did not rely on a weighted average indicator to calculate a reasonable royalty, but did so only "to help analyze how the parties would consider the various licenses at the hypothetical negotiation." Docket No. 98 at 10–11. Anker further contends that Powermat is also incorrect to suggest that weighted average indicators do not reflect a commonly used and reliable methodology. *Id.* at 11.

Mr. Kline's methodology is sufficiently reliable. According to Mr. Kline, "consideration of weighted value indicators is widely accepted in the field of valuation." Docket No. 98-2 (Kline Report) at ¶ 172 (citing use by the American Society of Appraisers Business Valuation Standards).

And courts in this District have denied *Daubert* motions where an expert used weighted-average valuations. *See, e.g.*, *Alacritech*, 2023 WL 6553832, at *3; *Synqor, Inc. v. Artesyn Techs., Inc.*, No. 2:11-CV-444, 2013 WL 12134198, at *2–3 (E.D. Tex. July 17, 2013). Although a comparable license approach is one method that Mr. Kline used to value the patents, a weighted average of licenses will likely also help the jury determine the damages amount. FED. R. 702(a). It is the province of the jury to determine whether Mr. Kline's application of this method is credible.

C. Royalty Stacking

Powermat argues that Mr. Kline's royalty stacking opinions are not tied to the facts of the case as Mr. Kline only speculates about patents not asserted in this case that Powermat could allegedly assert later. Docket No. 90 at 13. According to Powermat, there is no evidence that Anker considered royalty stacking during licensing negotiations, and "there is no evidence that Powermat has ever leveraged [its] Qi [portfolio] to extract higher royalties." *Id.* at 13–14.

In response, Anker represents that it will not present its theory regarding royalty stacking in paragraphs 99 and 100 of Mr. Kline's report, so long as Powermat agrees to not present its damages theory that Anker's entire net profit should be paid to Powermat as a royalty. Docket No. 98 at 11–12. Anker contends that the other challenged paragraphs do not actually set forth a royalty stacking theory and merely challenge Mr. Jarosz's opinions that the royalty rate offered for Powermat's entire patent portfolio should be awarded for the asserted patents. *Id.* at 13. According to Anker, the deposition testimony of Dr. Ozluturk confirms that "Powermat intends to continue to assert other patents from its portfolio against Anker." *Id.*

The Court concludes that Mr. Kline's opinions on royalty stacking, apart from paragraphs 99 and 100, are admissible. "Royalty stacking can arise when a standard implicates numerous patents, perhaps hundreds, if not thousands. If companies are forced to pay royalties to all SEP holders, the royalties will 'stack' on top of each other and may become excessive in the aggregate."

Ericsson, Inc. v. D-Link Sys., Inc., 773 F.3d 1201, 1209 (Fed. Cir. 2014). Generally, courts may exclude royalty stacking opinions for not being tied to the facts of the case. *Summit 6*, 802 F.3d at 1295. The Federal Circuit counsels that an expert's "abstract recitations of royalty stacking theory . . . are" alone "insufficiently reliable" and generally inadmissible. *Commonwealth Sci. & Indus. Rsch. Org. v. Cisco Sys., Inc.*, 809 F.3d 1295, 1302 (Fed. Cir. 2015). District courts have concluded that an expert's opinions on royalty stacking are not tethered to the facts of the case where the defendant adduces no evidence that the litigants would have considered royalty stacking in a hypothetical negotiation. *See, e.g.*, *Network-1 Techs., Inc. v. Alcatel-Lucent USA, Inc.*, No. 6:11-CV-492-RWS-KNM, 2017 WL 4173467, at *2–3 (E.D. Tex. Sept. 21, 2017).

Here, Mr. Kline offers opinions on royalty stacking and how the parties would approach the hypothetical negotiation in light of the contingency that Powermat might assert more patents after the conclusion of the hypothetical negotiation. Docket No. 98-2 (Kline Report) at ¶¶ 99, 100, 208, 234 & n.449. Notably, Dr. Ozluturk admitted that if the Court were to rule that Anker had a license on only the patents asserted in this case, then "the next day, Powermat is going to file another lawsuit with another seven patents." Docket No. 97-5 (Ozluturk Dep.) at 173:14–174:17. This admission provides some evidence that, in approaching a hypothetical negotiation, Powermat and/or Anker may have considered royalty stacking and the contingency that Powermat would assert other Qi standard essential patents against Anker after obtaining a license for the five asserted patents. Accordingly, the Court concludes that Mr. Kline's royalty stacking opinions are sufficiently tied to the facts of the case. *Core Wireless Licensing S.A.R.L. v. Apple Inc.*, No. 15-CV-05008 NC, 2016 WL 8231157, at *2–3 (N.D. Cal. Nov. 18, 2016) (concluding that the defendant expert's royalty stacking opinions were sufficiently tethered to the facts of the case where defendant presented some evidence of royalty stacking).

Powermat seeks to minimize Dr. Ozluturk's testimony, but to no avail. Docket No. 111 at 4–5. Powermat argues that Dr. Ozluturk "merely spoke about Powermat's goal to negotiate a portfolio-wide, FRAND license with Anker and clarified that 'he can't comment' on a litigation outcome where Anker licensed just the Asserted Patents, which is outside his experience." *Id.* at 4 (quoting Docket No. 97-5 (Ozluturk Dep.) at 173:14–174:17). Admittedly, Dr. Ozluturk did state in response to the same question to which he made his admission that the "end result ought to be a global licensing agreement between the companies that cover all jurisdictions, and for the entire portfolio." Docket No. 97-5 (Ozluturk Dep.) at 173:14–174:17. He also retorted that he "can't comment on" a contingency in which only the asserted patents were licensed. *Id.* However, in spite of all these caveats, Dr. Ozluturk commented on that very contingency and thereby provided some evidence of royalty stacking.

Powermat further contends that an expert may not opine on royalty stacking where there is no evidence that the defendant "consider[ed] royalty stacking in real-world licensing negotiations" or "received requests for multiple royalties." Docket No. 90 at 13 (quoting *Network-1*, 2017 WL 4173467, at *3). But the cases Powermat relies on do not stand for this principle. Although *Network-1* distinguished *Core Wireless Licensing S.A.R.L. v. Apple Inc.* on the grounds that Powermat described, *Network-1* only required some evidence that the parties would have anticipated royalty stacking. *Network-1*, 2017 WL 4173467, at *2–3. In *Network-1*, the defendant presented evidence only based on general suppositions about the economic circumstances concerning standard essential patents to suggest that the parties would have anticipated royalty stacking. *Id.*

Notably, Anker concedes that Mr. Kline will not offer the opinions in paragraphs 99 and 100 of his report if Mr. Jarosz does not testify regarding his opinions about Anker's net profits.

Docket No. 98 at 11–12. Given that the Court has excluded Mr. Jarosz's opinions about Anker's net profits, *see supra* Section II.D, the Court, in its discretion, decides that Anker should be held to its earlier representation, and paragraphs 99 and 100 shall be excluded.

D. Non-Infringing Alternatives

Powermat argues that Anker fails to show that there were non-infringing alternatives at the time of the hypothetical negotiation. Docket No. 90 at 14. Powermat further contends that, to the extent that Anker provides evidence of alternatives, such evidence was untimely and should be disregarded. *Id.*

Anker counters that Mr. Kline does not identify a non-infringing alternative in his report; he merely argues that Mr. Jarosz's incremental benefit approach is flawed because Mr. Jarosz "does not identify a non-infringing alternative that could have been written into the Qi Standard nor [does he] identify an alleged incremental benefit of the patented technology relative to that non-infringing alternative." Docket No. 98 at 13. According to Anker, assessing the incremental benefit requires assessing the value of the patented invention against that of non-infringing technologies. *Id.*

To the extent this dispute remains live, given that the Court excluded Mr. Jarosz's incremental benefit approach, *see supra* at Section II.D, the Court is not convinced that Mr. Kline's opinions should be excluded. Mr. Kline merely faults Mr. Jarosz's incremental benefit analysis for not comparing the patented technology to a non-infringing alternative. *See* Docket No. 98-2 (Kline Report) at ¶¶ 91–98. Mr. Kline does not opine on whether a non-infringing alternative exists. Accordingly, it is immaterial that it is Anker's "burden to show that an alternative is non-infringing." *Correct Transmission, LLC v. Nokia of Am. Corp.*, No. 2:22-CV-00343-JRG-RSP, 2024 WL 1289821, at *4 (E.D. Tex. Mar. 26, 2024).

E. Lump Sum

Powermat moves for exclusion of Mr. Kline's proposal that the reasonable royalty should be a lump sum, as opposed to a running royalty, because that proposal ignores the parties' history of using running royalties. Docket No. 90 at 15.

Anker contends in opposition that a lump sum agreement is representative of a hypothetical negotiation because (1) all the agreements [redacted] in this case involved lump sums, rather than running royalties; and (2) Powermat had a history of entering into agreements involving [redacted] Docket No. 98 at 14.

Again, Mr. Kline's opinions should not be excluded. Mr. Kline's lump sum royalty opinions reflect the application of a reliable methodology that is tethered to the facts of the case. All the licenses [redacted] involved lump sums, and Anker has presented evidence that Powermat entered agreements involving [redacted], including with [redacted] *See* Docket No. 98-2 (Kline Report) at ¶ 75; Docket No. 98-1 (Jarosz Report) at ¶ 130. To the extent that Powermat disagrees with Mr. Kline's conclusions, that is a matter that can be addressed via vigorous cross-examination. *Daubert*, 509 U.S. at 596.

* * *

Accordingly, Powermat's Opposed Motion to Strike and Exclude Certain Testimony and Opinions Offered by Philip W. Kline (Docket No. 90) is **GRANTED-IN-PART** as to paragraphs 99 and 100 (Docket No. 98-2 (Kline Report) at ¶¶ 99–100) but otherwise **DENIED-IN-PART**.

IV. Anker's *Daubert* Motion to Exclude Certain Opinions and Testimony of Dr. Tim Williams (Docket No. 88)

Anker seeks to exclude certain opinions and testimony of Dr. Williams regarding the '204 and '696 Patents. Docket No. 88 at 1. In addition, Anker moves, more broadly, to exclude wide

swaths of Dr. Williams's report that it contends are insufficiently linked to his infringement opinions. *Id.*

A. Opinions on the '204 and '696 Patents

Powermat asserts that Anker infringes (1) claims 4 and 6 of the '204 Patent, and (2) claims 1, 4, and 11 of the '696 Patent. Docket No. 101-2 (Williams Initial Report) at ¶¶ 103, 106.

Anker argues that Dr. Williams belatedly offers claim construction opinions regarding two different terms included in the '204 and'696 Patents. Docket No. 88 at 1–2. According to Anker, Powermat waived these theories by not requesting that the Court construe the terms as such during the *Markman* proceedings. *Id.*

1. Legal Standard

The interpretation of the meaning of claim language within a patent is a question of law. *Markman v. Westview Instruments, Inc.*, 517 U.S. 370, 372 (1996). As such, expert testimony that is inconsistent with a court's claim construction should be excluded. *Exergen Corp. v. Wal-Mart Stores, Inc.*, 575 F.3d 1312, 1321 (Fed. Cir. 2009) ("No party may contradict the court's construction to a jury."). Conversely, the issue of infringement, *i.e.*, whether an accused product is covered by the scope of the claims, is an issue of fact for the jury to resolve. *Id.* at 1318.

2. "a signal detector adapted to detect a first signal and a second signal"

With respect to the '204 Patent, Anker charges that Dr. Williams offers improper claim construction opinions regarding the term "a signal detector adapted to detect a first signal and a second signal" in claim 1, from which asserted claim 4 depends. Docket No. 1-7 ('204 Patent) at 28:37–39. Anker challenges Dr. Williams's opinions regarding that term on three different grounds.

a. Multi-Bit Communication

Anker contends that Dr. Williams interprets the term to require multi-bit communication, *i.e.*, more than two bits. Docket No. 88 at 6–7. According to Anker, Dr. Williams arrived at this belated construction by improperly importing limitations from the specification. *Id.*

Powermat responds that the plain and ordinary meaning of an unconstrued claim term must be determined with reference to the specification. Docket No. 101 at 4. Further, Powermat contends that Dr. Williams merely raised this interpretation as a difference between the patented invention and the Onishi prior art reference invoked by Anker. *Id.* at 4–5.

The Court holds that the plain and ordinary meaning of the term does not require multi-bit communication, and thus Dr. Williams offers an improper claim construction opinion that he may not raise at trial. Nothing in the claim language requires multi-bit communication, and Powermat does not explain how or why the plain and ordinary meaning requires or is inherently limited to multi-bit communications.

Powermat's contention that Dr. Williams merely gave this opinion to distinguish the claim term from the prior art does not upset the Court's conclusion. Docket No. 101 at 4–5. There is admittedly a fine line between evaluating whether a reference meets a claim limitation and construing the meaning of that claim limitation. However, here, Powermat offers no explanation as to why the plain and ordinary meaning—or any interpretation of the claim term—would require multi-bit communication.

b. Combined Interference

Anker argues that Dr. Williams improperly interprets "signal detector" to require a detector not "capable of detecting the combined interference with the signal it sought to detect." Docket No. 88 at 7 (quoting Docket No. 88-12 (Williams Dep.) at 199:12–17). Anker further contends that Dr. Williams only argues that this construction is required because otherwise the detector

"would not function in its intended way for its intended purpose," which is not a proper consideration in determining the plain and ordinary meaning of a claim term. *Id.* (quoting Docket No. 88-12 (Williams Dep.) at 199:18–22).

Powermat counters that Dr. Williams merely explained that the patented invention, unlike the Onishi reference, was capable of detecting a "first signal" and a "second signal," as is required by the claims. Docket No. 101 at 5–6.

The Court holds that Dr. Williams's opinions are permissible and do not conflict with the Court's *Markman* Order (Docket No. 76). Dr. Williams opines on why the Onishi reference is unable to meet the recited claim limitations. *See* Docket No. 88-12 (Williams Dep.) at 199:12–22. Dr. Williams does not impermissibly construe the claim term.

Anker's arguments that Dr. Williams imports a performance requirement into the claim term to distinguish the Onishi reference are inapposite. Docket No. 88 at 7. A reference that meets a claim limitation in an inefficient manner nevertheless anticipates that limitation where the claim recites no performance requirements. *See Iovate Health Scis., Inc. v. Bio-Engineered Supplements & Nutrition, Inc.*, 586 F.3d 1376, 1382 (Fed. Cir. 2009). Here, Dr. Williams did explain that a "signal detector capable of detecting [] combined interference" would not meet the claim limitation because "the interference would cause incorrect decisions by the signal detector," and accordingly the signal detector "would not function in its intended way for its intended purpose." Docket No. 88-12 (Williams Dep.) at 199:12–22. However, this testimony is only equivocal and does not establish that he determined that such a hypothetical system would not meet the claim term just because the hypothetical system would not function efficiently. At this preliminary juncture, the Court is not convinced that Dr. Williams merely challenges the performance of the Onishi

reference, rather than that reference's propensity to meet the claim limitation. Accordingly, Dr. Williams's testimony on this topic will not be excluded.

c. First and Second Signal

Anker argues that Dr. Williams improperly opines that the claimed "first and [] second signal" can be the same signal. Docket No. 88 at 8. According to Anker, this reading of the claim violates fundamental principles of claim construction and would render the claims nonsensical, given that, elsewhere in claim 1, it is specified that the claimed driver will decrease power in response to the first signal and increase power in response to the second signal. *Id.* (citing *CAE Screenplates Inc. v. Heinrich Fiedler GmbH & Co.*, 224 F.3d 1308, 1317 (Fed. Cir. 2000) ("In the absence of any evidence to the contrary, we must presume that the use of . . . different terms in the claims connotes different meanings."); *Becton, Dickinson & Co. v. Tyco Healthcare Grp., LP*, 616 F.3d 1249, 1255 (Fed. Cir. 2010) ("A claim construction that renders asserted claims facially nonsensical 'cannot be correct.' ")); Docket No. 1-7 ('204 Patent) at 28:40–45.

In response, Powermat contends that Dr. Williams never offered this opinion and considers the first and second signals to be distinct. Docket No. 101 at 7. Dr. Williams only opined that the first and second signals can be "separated in time, [while] not necessarily in value." *Id.* at 8 (quoting Docket No. 88-12 (Williams Dep.) at 191:15–192:6).

The Court agrees with Powermat. Claim 1 only requires "a signal detector adapted to detect a first signal and a second signal." Docket No. 1-7 ('204 Patent) at 28:37–39. Dr. Williams's testimony that the first signal and the second signal can be separated in time while not necessarily in value reflects the plain and ordinary meaning of the claim term at issue. Docket No. 88-12 (Williams Dep.) at 191:15–192:12. Contrary to Anker's arguments, such a conception of the claim term does not repudiate the principle that "the use of . . . different terms in the claims connotes different meanings." *CAE*, 224 F.3d at 1317.

Anker protests that Dr. Williams's interpretation of claim 1 would render the term nonsensical because elsewhere claim 1 requires the claimed driver to provide less power in response to the first signal and more power in response to the second signal. Docket No. 88 at 8; Docket No. 1-7 ('204 Patent) at 28:40–45. Per Anker, a first signal and second signal that are the same value could not perform these other limitations of claim 1. *Id.* However, Anker has not established that the claimed system could only accomplish such responses if the first signal and second signal were different values. Contrary to Anker's arguments, it is arguably Anker—not Powermat—that impermissibly seeks to limit the plain and ordinary meaning of the claim term by moving to exclude Dr. Williams's testimony on this term.

3. "substantially different from said characteristic resonant frequency"

Next, Anker argues that Dr. Williams improperly construes the "substantially different from said characteristic resonant frequency" term in claim 1 of the '204 Patent and claim 1 of the '696 Patent. Docket No. 88 at 9; Docket No. 1-7 ('204 Patent) at 28:34–35; Docket No. 1-4 ('696 Patent) at 28:45–46. According to Anker, Dr. Williams's opinions regarding the meaning of this term are copy-and-pasted from claim construction arguments that the PTAB rejected in an IPR proceeding involving the '696 and '204 Patents. *Id.* Dr. Williams's opinion that the term requires a frequency that is " 'outside the linear or near-linear region of the resonance curve,' " Anker contends, is divorced from the plain meaning of the term, which only mandates a frequency that is "substantially different" from the "characteristic resonance frequency." *Id.* at 10 (quoting Docket No. 88-2 (Williams Rebuttal Report) at ¶¶ 430, 477).

In response, Powermat argues that Dr. Williams's analysis of the "substantially different" term reflects the proper plain and ordinary meaning of the term in light of the specification and prosecution history. Docket No. 101 at 9.

Notably, at the hearing, Anker agreed that Dr. Williams may argue that the plain and ordinary meaning of the "substantially different" term requires a frequency that "lie[s] within the linear or [near]-linear region of a frequency-amplitude graph."[5] Docket No. 177-1 (Anker Hearing Demonstratives) at 102 (quoting Docket No. 88-4 (Powermat's Patent Owner Preliminary Response for '696 Patent) at 21–25; Docket No. 88-5 (Powermat's Patent Owner Preliminary Response for '204 Patent) at 20–25); Docket No. 182 (Hearing Tr.) at 101:17–103:15 ("Our position is that certainly, the patent owner's response during the file history, which is what I understand to be No. 1 on Slide 102, is fair game for understanding this plain and ordinary meaning of the claim term."). Anker explained that it only took issue with Dr. Williams construing the term to require an "allow[ance] for some incremental change (increase or decrease) in frequency while remaining in the near-linear/linear regions of the frequency-amplitude graph." Docket No. 177-1 (Anker Hearing Demonstratives) at 102 (quoting Docket No. 88-4 (Powermat's Patent Owner Preliminary Response for '696 Patent) at 21–25; Docket No. 88-5 (Powermat's Patent Owner Preliminary Response for '204 Patent) at 20–25); Docket No. 182 (Hearing Tr.) at 101:17–103:15.

In light of Anker's concession, the Court concludes that the vast majority of Dr. Williams's opinions reflect a proper application of the plain and ordinary meaning of the claim term and are not subject to exclusion. Anker agrees that Dr. Williams may argue that the plain and ordinary meaning of the "substantially different" term requires a frequency to "lie within the linear or [near]-linear region of a frequency-amplitude graph." Docket No. 177-1 (Anker Hearing Demonstratives) at 102 (quoting Docket No. 88-4 (Powermat's Patent Owner Preliminary

[5] Anker concedes that Powermat's Patent Owner Preliminary Response before the PTAB incorrectly used the term "non-linear" when it actually meant "near-linear." Docket No. 88 at 3 n.1. This is also how Anker characterized Powermat's position during the hearing. *See* Docket No. 182 (Hearing Tr.) at 101:17–103:15.

Response for '696 Patent) at 21–25; Docket No. 88-5 (Powermat's Patent Owner Preliminary Response for '204 Patent) at 20–25). Anker only challenges the second prong of Dr. Williams's alleged construction, which requires some "allow[ance] for some incremental change (increase or decrease) in frequency while remaining in the near-linear/linear regions." *See id.* (quoting Docket No. 88-4 (Powermat's Patent Owner Preliminary Response for '696 Patent) at 21–25; Docket No. 88-5 (Powermat's Patent Owner Preliminary Response for '204 Patent) at 20–25). Certainly, Dr. Williams may not "invade the Court's province" by construing the "substantially different" term to require an "allow[ance]" not specified in the claims. *Varta Microbattery GmbH v. Audio P'ship LLC*, No. 2:21-CV-00400-JRG-RSP, 2023 WL 5192986, at *4 (E.D. Tex. Aug. 11, 2023). The PTAB's decision to reject Powermat's "allow[ance]" construction underscores that such a conception of the "substantially different" term does not reflect the term's plain and ordinary meaning. Docket No. 182 (Hearing Tr.) at 103:8–15; *see, e.g.*, Decision Granting Institution of *Inter Partes* Review at 21–22, *Anker Innovations Ltd. v. Powermat Techs. Ltd.*, No. IPR2024-00994 (PTAB Dec. 10, 2024), Docket No. 7 ("As to the second part, . . . we determine that [Powermat] has not explained adequately why such a benefit should be read into the claim term 'substantially different,' particularly where the quoted Specification support does not explicitly mention linear regulation."). Further, Powermat bears the burden of proof to show that the opinions of its expert are admissible, FED. R. EVID. 702, and it fails to offer any particularized arguments explaining why the "allow[ance]" construction is proper. Accordingly, Dr. Williams's opinions on the "allow[ance]" construction shall be excluded, but Dr. Williams's challenged opinions are otherwise admissible.

B. Exclusion of Technical Documents

Anker argues that Dr. Williams improperly relies on hundreds of pages of excerpted technical documents without specifically explaining how these documents show infringement of

particular claim elements or how each of the accused products infringes each claim element. Docket No. 88 at 13–14. Accordingly, Anker contends that Dr. Williams's technical document excerpt opinions are disconnected from his infringement determinations and should be excluded. *Id.* at 14–15 (citing *Mettler-Toledo, Inc. v. Fairbanks Scales, Inc.*, No. 9:06-CV-97, 2008 WL 11348468, at *4 (E.D. Tex. Oct. 27, 2008)).

Powermat counters that Dr. Williams adequately analyzed and relied upon the technical documents excerpted in his report. Docket No. 101 at 10–13.

Because Anker does not cite any authority justifying the relief it seeks, the Court will not exclude the technical documents cited by Dr. Williams. Dr. Williams's reports, and associated exhibits, are voluminous and are—by no means—a model of clarity or concision. However, he does generally explain with particularity how the accused products meet each of the asserted claim limitations. *See, e.g.*, Docket No. 102-3 (Williams Initial Report, Ex. C) at ¶¶ 52–174 (analyzing whether the accused products infringe claim 13 of the '461 Patent). His opinions further incorporate by reference other parts of his report that set out the tests he conducted, his analysis of the Qi standard, and other technical documents associated with the accused products. *See, e.g.*, *id.* Notably, Anker does not move for summary judgment on all the asserted claim terms; Anker only challenges the relevance of Dr. Williams's technical document opinions. Docket No. 88 at 13–14. However, the challenged technical documents describe characteristics of the accused products and are generally probative of infringement. *See, e.g.*, Docket No. 102-2 (Williams Initial Report) at 223–338 (Table 2). In such circumstances, "disputes about the degree of relevance or accuracy (above this minimum threshold) may go to the testimony's weight, but not its admissibility." *i4i Ltd. P'ship v. Microsoft Corp.*, 598 F.3d 831, 852 (Fed. Cir. 2010), *aff'd*, 564 U.S. 91 (2011). Accordingly, Dr. Williams's technical excerpt opinions shall not be excluded.

The only cases that Anker relies on are inapposite. For example, *Mettler-Toledo, Inc. v. Fairbanks Scales, Inc.* did not involve a litigant seeking to exclude expert testimony for being insufficiently tied to the infringement of particular claim limitations. No. 9:06-CV-97, 2008 WL 11348468, at *4 (E.D. Tex. Oct. 27, 2008). Rather, that case held that an expert's infringement testimony should be excluded where his report amounted to only "a series of claim charts," and the expert provided only conclusory analysis to support his infringement opinions. *Id.* Here, Dr. Williams has put forth charts of technical evidence along with analysis on a limitation-by-limitation basis for each asserted claim. *See supra* at 41.

* * *

In summary, Anker's *Daubert* Motion to Exclude Certain Opinions and Testimony of Dr. Tim Williams (Docket No. 88) is **GRANTED-IN-PART** in that Dr. Williams may not opine that: (1) the "signal detector" recited in claim 1 of the '204 Patent requires multi-bit communication; and (2) the "substantially different" term recited in claim 1 of the '204 Patent and claim 1 of the '696 Patent requires "allow[ance] for some incremental change (increase or decrease) in frequency while remaining in the near-linear/linear regions of the frequency-amplitude graph." Anker's motion (Docket No. 88) is otherwise **DENIED-IN-PART**.

V. Anker's Partial Motion for Summary Judgment of Noninfringement of U.S. Patent No. 8,626,461 (Docket No. 85)

Powermat asserts claim 14 of the '461 Patent, which depends on unasserted claim 13, against Anker. Docket No. 102-3 (Williams Initial Report, Ex. C) at ¶ 14; Docket No. 1-3 ('461 Patent) at 22:20–22. Independent claim 13 covers "[a]n inductive power outlet comprising at least one primary coil, for inductively coupling with a secondary coil." Docket No. 1-3 ('461 Patent) at 21:52–53. The "inductive power outlet comprising at least one primary coil" provides power via electromagnetic induction to a secondary coil, which may be used to charge, for example, a mobile

phone. *See, e.g.*, *id.* at 1:40–56, 16:28–39, 21:52–22:2. Among other limitations, claim 13 of the ’461 Patent requires “at least one input power monitor configured to measure input power received by the primary coil from the power supply.” *Id.* at 22:3–5. Dr. Williams maintains that the asserted claims of the ’461 Patent are essential to practicing the Qi standard. Docket No. 102-2 (Williams Initial Report) at ¶ 51.

Primarily, Dr. Williams opines that each of the accused products infringes the ’461 Patent based on their adherence to the Qi standard. Docket No. 102-3 (Williams Initial Report, Ex. C) at ¶¶ 27–51. The Qi standard provides different designs that products can follow, but, importantly, neither party disputes that each of the accused products follows a version of the standard that requires a current sense monitor, rather than a power monitor or a sensing monitor. Docket No. 85 at 3–4. A typical design followed by the accused products is shown below.

Figure 35. Functional block diagram of Power Transmitter design A11a

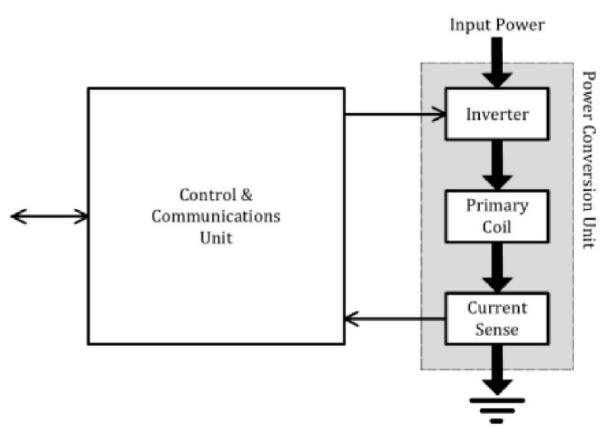

Docket No. 102-3 (Williams Initial Report, Ex. C) at ¶ 93 (excerpting Qi Part 4: Reference Designs, version 1.2.4, February 2018 (“Qi v1.2.4 Reference Designs”) at 66). Notably, the Qi standard explains that, true to its name, “the current sense monitors the Primary Coil ***current***.” *Id.* (excerpting Qi v1.2.4 Reference Designs at 66) (emphasis added); *see id.*at ¶¶ 93–102. The Qi standard does not mention whether the current sense measures voltage or power.

The figure above shows a functional block diagram of a "power transmitter," which is essentially the Qi standard's nomenclature for an inductive power outlet. Docket No. 102-3 (Williams Initial Report, Ex. C) at ¶ 91–93 (excerpting Qi v1.2.4 Reference Designs at 66); *see, e.g.*, Docket No. 85-2 (Qi Power Class 0 Specification) at POWERMAT_ANKER0033363. The secondary coil that receives power from the power transmitter is not displayed in the diagram. Devices that include secondary coils that are charged by power transmitters are referred to in the Qi standard sometimes as "power receivers." *See, e.g.*, Docket No. 85-2 (Qi Power Class 0 Specification) at POWERMAT_ANKER0033363.

A. Literal Infringement

Anker asserts that its accused wireless charging products do not literally infringe the '461 Patent because they do not include the claimed "input power monitor." Docket No. 85 at 1. According to Anker, Powermat only accuses its products of using "current monitors," which measure current rather than power. *Id.* at 1, 8. In particular, Anker contends that the infringement theory of Dr. Williams provides that the accused products infringe by following Qi standard designs that use current sense monitors, which are not described by the Qi standard to measure power. *Id.* at 3, 8–9. Indeed, per Anker, Dr. Williams's own testimony confirms that "if we only knew the current entering the coil but we didn't know the voltage, then that would not satisfy the input power monitor in claim 13." *Id.* at 11 (quoting Docket No. 85-8 (Williams Dep.) at 137:15–19).

Powermat counters that genuine issues of material fact remain as to whether the "current sense" in the accused products constitutes a "power monitor" under claim 13. Docket No. 102 at 3, 7. Powermat draws the Court's attention to Dr. Williams's opinions that "the current sense measures the input power as current caused by the AC waveform in the primary coil." *Id.* at 5 (quoting Docket No. 102-3 (Williams Initial Report, Ex. C) at ¶ 93). According to Powermat, to

the extent that Dr. Williams's testimony conflicts with that of Anker's expert, the Court cannot resolve such conflicts on summary judgment. *Id.* at 9–10. Moreover, Powermat puts forth numerous other theories, including that the accused products infringe because: (1) some of the accused products practice an Extended Power Profile design to measure input power and determine power losses at different parts of the circuit, *id.* at 5–6; (2) some of the accused products practice a Baseline Power Profile design, *id.* at 6; (3) certain datasheets associated with some of the accused products show that the power delivered to the primary coil is a variable determined for purposes of foreign object detection, *id.* at 9; and (4) the accused products can determine power by measuring current, where the resistance is known, Docket No. 126 at 2.[6]

The Court determines that Powermat's literal infringement case should survive for a subset of the accused products, namely, those practicing an Extended Power Profile design, but summary judgment is warranted as to the rest of the accused products. The Court will examine each of Powermat's theories in turn.

1. Current Sense

Dr. Williams's theory that the accused products infringe because they include a current sense module, as defined by the Qi standard, cannot foreclose summary judgment for all the accused products. Dr. Williams accuses the current sense of "measur[ing] the input power as current caused by the AC waveform in the primary coil." Docket No. 102-3 (Williams Initial Report, Ex. C) at ¶ 93. The Qi standard itself does not describe the current sense as measuring input power, and Powermat adduces no evidence suggesting that all the accused products practice

[6] Powermat also generally claims that "Dr. Williams performed testing and teardowns, analyzed the Qi standard, schematics, component specifications, bills of materials, and other technical documents to support his opinions." Docket No. 126 at 8. However, Powermat fails to explain at any level of particularity how Dr. Williams's analysis regarding that evidence supports his infringement opinions regarding the "input power monitor" term.

a Qi standard design in which the current sense measures input power. The insufficiency of Dr. Williams's conclusory testimony is belied by his concession that "[i]f we only knew the current entering the coil but we didn't know the voltage, then that would not satisfy the input power monitor in claim 13."[7] Docket No. 85-8 (Williams Dep.) at 137:15–19. Dr. Williams's "[c]onclusory [] assertions cannot raise triable issues of material fact on summary judgment." *Sitrick v. Dreamworks, LLC*, 516 F.3d 993, 1001 (Fed. Cir. 2008).

In addition, Powermat's conclusory and wholly unsupported attorney argument that the Qi functional block diagrams demonstrate infringement similarly cannot save Powermat's case from summary judgment. Powermat draws the Court's attention to the Qi standard A11a design block diagram.

[7] Powermat contends that Anker takes Dr. Williams's testimony out of context by alluding to portions of his testimony in which he was distinguishing the asserted claims from a prior art reference. Docket No. 102 at 8. However, Powermat's objections are meritless. Anker plainly asked Dr. Williams a question about the scope of the claim term generally:

> Q. In your opinion, to be able to determine whether or not something is an input power monitor configured to measure input power received by the primary coil from the power supply, we'd need to be able to determine either the power directly at the coil or the current and the voltage directly at the coil such that we could calculate the power; is that fair?
> A. Yes.
> Q. If we only knew the current entering the coil but we didn't know the voltage, then that would not satisfy the input power monitor in Claim 13; is that right?
> A. Yes.

Docket No. 85-8 (Williams Dep.) at 137:6–19.

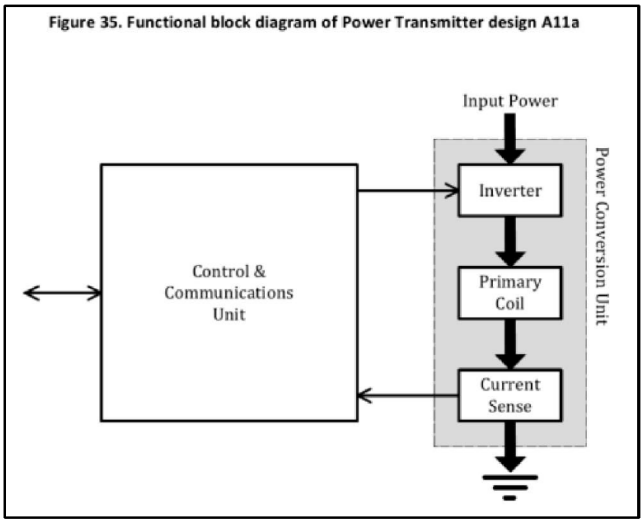

Figure 35. Functional block diagram of Power Transmitter design A11a

Docket No. 102 at 4; Docket No. 102-3 (Williams Initial Report, Ex. C) at ¶ 93 (excerpting Qi v1.2.4 Reference Designs at 66). According to Powermat, this diagram demonstrates that "the input power comes into the power conversion unit, the inverter conducts certain operations, and the Current Sense block is the last component receiving all of the information—***including input power***—from the preceding steps before passing that information onto the Control & Communication Unit." Docket No. 102 at 5 (emphasis in original).

Powermat's theory fails because Powermat only accuses the current sense of collecting information related to the pre-inverter input power, whereas the claim language requires "measur[ement] [of the] input power received by the primary coil." Docket No. 1-3 ('461 Patent) at 22:3–5. Anker asserts, and Powermat does not dispute, that the inverter would cause power loss between the power supply and the primary coil. Docket No. 109 at 4–5; Docket No. 126 at 7. Indeed, in its opposition, Powermat cites a Qi standard document that describes measuring "the power loss in the inverter." Docket No. 102 at 6 (citing Docket No. 102-3 (Williams Initial Report, Ex. C) at ¶ 103 (excerpting the Qi standard)). Accordingly, neither party disputes that the measurement of the pre-inverter input power would generally not be equivalent to the "input power

received by the primary coil," and a reasonable jury could not conclude on the basis of such measurements that all the accused products satisfy the "input power monitor" claim term.

In any event, Powermat's block diagram theory is entirely untethered from Dr. Williams's opinions and does nothing to explain how the current sense measures the input power or whether input power is measured at all. Such attorney argument cannot forestall summary judgment. *Blue Spike, LLC v. Audible Magic Corp.*, No. 6:15-CV-584, 2016 WL 3653516, at *4 (E.D. Tex. May 31, 2016) (explaining that attorney argument is insufficient "to preclude summary judgment").

2. Power Profile Designs

The Court concludes that Powermat's literal infringement case against the accused products that practice an Extended Power Profile ("EPP") design survives summary judgment, but Powermat's case against the accused products that practice a Baseline Power Profile ("BPP") design fails. Dr. Williams opines that, because "each of the Accused '461 Products is a power transmitter as defined by the Qi Standard[,] . . . each of the Accused '461 Products comprises an efficiency monitor comprising 'at least one input power monitor configured to measure input power received by the primary coil from the power supply.' " Docket No. 102-3 (Williams Initial Report, Ex. C) at ¶ 91 (quoting Docket No. 1-3 ('461 Patent) at 22:3–5). Although Dr. Williams accuses the current sense of serving as an input power monitor, he also puts forth evidence showing that products adhering to the EPP design in the Qi standard "can determine [] Transmitted Power P_{PT} by measuring the power P_{in} provided at its input and subtracting any power P_{PTloss} that is dissipated inside the Base Station." *Id.* at ¶ 103 (excerpting Qi Parts 1 and 2: Interface Definitions, version 1.2.4, February 2018 ("Qi v1.2.4 Interface Definitions") at 135)). Further, the Qi standard provides that "[t]his power P_{Ptloss} includes, for example: the power loss in the inverter, the power loss in the Primary Coil, the power loss in resonance capacitors, the power loss in the Shielding of the Primary Coil assembly, and the power loss in any metal parts of the Base Station." *Id.*

(excerpting Qi v1.2.4 Interface Definitions at 135). These requirements, coupled with Dr. Williams's other opinions, raise a genuine issue of material fact as to whether the accused products practicing EPP include the claimed "at least one input power monitor configured to measure input power received by the primary coil from the power supply." Viewing the facts in the light most favorable to Powermat, the evidence suggests that the accused products practicing EPP necessarily measure "input power received by the primary coil" to determine the power loss in the primary coil.

Anker argues that this evidence is insufficient because the Qi standard only requires that a product following the EPP design "can" determine the transmitted power and the associated power losses, and "can" only denotes a capability according to the Qi standard. Docket No. 109 at 7 (excerpting Docket No. 109-1 (Qi Specification: Foreign Object Detection, version 1.3, dated January 2021) at POWERMAT_ANKER0035739). Anker also argues that "the power loss in the Primary Coil" is only listed as an "example" of a power loss that could be measured, and the EPP design does not necessarily require its measurement. *Id.* Notably, claim 13 only requires "at least one input power monitor ***configured to*** measure input power." Docket No. 1-3 ('461 Patent) at 22:3–5 (emphasis added). Viewing the record in the light most favorable to Powermat, a genuine issue of material fact remains as to whether the products adhering to the EPP design are "configured to measure input power received by the primary coil" as required by the claim.

Evidence of the other accused products' power profile designs does not foreclose summary judgment, however. Powermat's arguments that the accused products practicing BPP infringe by virtue of adhering to that design are inapposite. Powermat characterizes BPP as "monitor[ing] power loss by monitoring the received power reported by a power receiver." Docket No. 102 at 6. However, Powermat offers no explanation as to how the input power to the primary coil could be

calculated by measuring the power transferred to the power receiver. *Id.* Although such a measure might be indicative of the power delivered to the primary coil, power could be dissipated in the primary coil, *e.g.*, as heat, and so the power transferred to the power receiver would not be an accurate reflection of the power delivered to the primary coil. In the absence of expert argument explaining how such a measure could be representative of the input power to the primary coil, Powermat's case for literal infringement against the products practicing BPP cannot survive summary judgment. *Blue Spike*, 2016 WL 3653516, at *4.

3. Datasheet Evidence

During the hearing, Powermat shared several other excerpts of component datasheets that purportedly show that some of the accused products that do not practice EPP infringe the '461 Patent. *See* Docket No. 180-1 (Powermat Hearing Demonstratives) at 7–15 (excerpting datasheets for the [redacted] 5 components). However, all this evidence is inapposite.

[redacted] are power transmitters that are used in several of the accused products. Docket No. 180-1 (Powermat Hearing Demonstratives) at 5–6, 8. The datasheets for these components explain that "[t]he system supports foreign object detection (FOD) by continuously monitoring the amount of power transferred and comparing that to the amount of received power, as reported by the receiver. In order to do this, the [power transmitters] measure[] the input DC current very accurately using a current sense amplifier."[8] Docket No. 102-2

[8] The datasheet for the [redacted] component includes a slightly different version of the second sentence and explains: "To do this, [redacted] uses a ***current sampling op amp*** to measure the input DC current very accurately." Docket No. 102-2 (Williams Initial Report) at 293–94 (emphasis added) (excerpting the [redacted] datasheet).

(Williams Initial Report) at 162–71, 293–94 (excerpting the [redacted] datasheets). Dr. Williams puts forth no opinions explaining why these datasheets show infringement. Viewing the evidence in the light most favorable to Powermat, these datasheets might suggest that the accused products that use these components measure the pre-inverter power because they measure "input DC current" to determine the power before the current has been converted to an AC waveform by the inverter. *Cf.* Docket No. 102-3 (Williams Initial Report, Ex. C) at ¶ 93 ("[T]he inverter converts a DC input to an AC waveform that drives the primary coil(s) through a resonant capacitor to induce a voltage across a coupled secondary coil. The Current Sense measures the input power as current caused by the AC waveform in the primary coil."). However, the Court has already concluded that evidence of pre-inverter power measurements is insufficient to raise a genuine issue of material fact on literal infringement. *See supra* Section V.A.1. And thus, a reasonable jury could not conclude that the accused products using the [redacted] components literally infringe the '461 Patent based on such evidence.[9]

The [redacted] component datasheet similarly does not constitute sufficient evidence to foreclose summary judgment. Powermat argues that this datasheet provides that the [redacted] component must measure the pre-Q of the system, which, Powermat posits, refers to the input power to the primary coil. Docket No. 126 at 7, 9. Further, Powermat contends that the [redacted] datasheet explains that the "MCU compares the measured Pre-Q with reference Q-factor provided by the receiver." *Id.* at 7 (quoting Docket No. 102-2 (Williams Initial Report) at 213–14). Powermat maintains that measuring the Q-factor requires determining "the ratio of apparent power

[9] Powermat also suggests that the [redacted] datasheets "generally establish[] that monitoring input/output power is accomplished by measuring current without explicitly discussing the additional measurement of voltage." Docket No. 102 at 7. But Powermat adduces no expert testimony or explanation for why this aspect of the datasheets is representative of any other facet of the accused products or the Qi standard's discussion of the current sense.

to the power losses in a device," which requires a determination of the input power to the primary coil. *Id.* (quoting Docket No. 102-3 (Williams Initial Report, Ex. C) at ¶ 82). Powermat does not identify any opinions of Dr. Williams that directly support its contentions that the [redacted] datasheet shows infringement. Powermat does argue that pre-Q is "the power delivered to the coil," but Powermat cites no expert testimony to support this assertion. *Id.* at 9. Moreover, based on the Court's review, the datasheet evidence does not make clear that the pre-Q of the system is the input power delivered to the primary coil. *See, e.g.*, Docket No. 102-2 (Williams Initial Report) at 205–14 (excerpting [redacted] datasheet). In addition, the general measurement of power loss does not raise a genuine issue of material fact that the accused products using the [redacted] component would measure the input power to the primary coil. The datasheet does not specify at what level of granularity the power loss is determined, *i.e.*, whether power loss in the primary coil is ascertained. Again, Powermat's unsupported attorney argument cannot save this portion of its case from summary judgment. *Blue Spike*, 2016 WL 3653516, at *4.

Powermat also puts forth a schematic associated with the accused product, A2503. Docket No. 126 at 4–5 (citing Docket No. 102-3 (Williams Initial Report, Ex. C) at 96 (excerpting schematic for the A2503 product)); Docket No. 180-1 (Powermat Hearing Demonstratives) at 17. Powermat argues that this schematic provides evidence that the A2503 product, as well as other accused products, measure voltage to determine "the power delivered to the coil." Docket No. 126 at 5. Powermat cites to portions of Dr. Williams's report, but none of his cited opinions support this contention. *See, e.g.*, Docket No. 102-3 (Williams Initial Report, Ex. C) at ¶¶ 81, 85, 105, 107–08. Powermat adduces no evidence, other than unsupported attorney argument, to suggest that any of the accused products, let alone the A2503, are "configured to measure input power

received by the primary coil" by virtue of measuring voltage. *Blue Spike*, 2016 WL 3653516, at *4.

The Court will quickly dispatch the remaining datasheets, which Powermat has likewise not devoted much time to. *See* Docket No. 180-1 (Powermat Hearing Demonstratives) at 7–15 (excerpting datasheets for the [redacted] components). Many of the remaining datasheets mention foreign object detection, measuring power efficiency of the system, Q factor detection, or power measurement generally. *Id.* However, Powermat does not identify, nor could the Court locate, any expert opinions in which Dr. Williams mapped these terms as used in the datasheets onto the "input power monitor" claim term.

Mere mention of monitoring the power transferred, presumably from the primary coil to the power receiver, does not save Powermat's literal infringement case. Docket No. 180-1 (Powermat Hearing Demonstratives) at 7–15. Although one means to measure the power transferred could involve determining the input power to the primary coil, a system could also monitor the power transferred by communicating with the power receiver or through some other means that does not require measuring input power to the primary coil. *See, e.g.*, Docket No. 102 at 6 (describing BPP).

In addition, some of the remaining datasheets mention "[d]etect[ing] the Voltage of the coil." *See, e.g.*, Docket No. 102-2 (Williams Initial Report) at 215–17 (excerpting WP80024 datasheet). However, Powermat does not provide any evidence that these datasheets use that voltage to calculate the input power to the primary coil. Equivocal evidence, whose relevance is only supported by attorney argument, cannot save Powermat from summary judgment of no literal infringement. *Cf. Stahl v. Novartis Pharms. Corp.*, 283 F.3d 254, 272 (5th Cir. 2002) ("Such

equivocal and ill-supported testimony is simply insufficient to preclude summary judgment on this inadequate warning claim.").

4. Power Calculated Using Current and Resistance

Powermat puts forth a novel theory that a reasonable jury could conclude that current could be used to measure power through the equation $P = I^2 \times R$, where P = Power, I = Current, and R = Resistance. Docket No. 126 at 1–2. This equation only seems to appear in the record in excerpts of the SC5001 and SC5004 datasheets included in Dr. Williams's report. *See, e.g.*, Docket No. 102-3 (Williams Initial Report, Ex. C) at 68–69. Notably, even these datasheets do not suggest that the accused products use this equation to measure the input power to the primary coil. The datasheets appear to reference this equation only for the purpose of advising what the current sense resistor power rating should be. *See, e.g.*, *id.* at 68 ("The ***resistor power rating*** and temperature coefficient should also be considered. The power dissipation is roughly calculated as $P=I^2R$, and I is the ***highest current flowing*** through the resistor. The ***resistor power rating*** should be higher than the calculated value." (emphasis added)). Although it is hypothetically possible that the accused products could calculate the power by measuring the current over a resistor of known resistance, Powermat puts forth no source code or any evidence that would suggest that such a calculation is taking place in the remaining accused products. *Wheat v. Fla. Par. Juv. Just. Comm'n*, 811 F.3d 702, 709 (5th Cir. 2016) ("This possibility is not enough to create a material fact or issue of law that bars summary judgment, especially when the underlying premise of such 'possibility' appears to be false.").

B. Doctrine of Equivalents

Anker further contends that Powermat's alternative doctrine of equivalents ("DOE") theory is inapposite because Dr. Williams's opinions require the accused products to measure voltage to be equivalent to the claimed "input power monitor." Docket No. 109 at 9. And Dr. Williams does

not establish that any of the accused products measure voltage. *Id.* Powermat contends that, contrary to Anker's arguments, Dr. Williams conducted a legally sufficient function-way-result analysis. Docket No. 102 at 11–12.

The Court holds that Powermat's DOE theory survives summary judgment. Dr. Williams's opinions raise a genuine dispute of material fact as to whether the measurement of current performed by the current sense in the accused products is equivalent to the claimed "input power monitor" that measures power received by the primary coil. *See* Docket No. 102-3 (Williams Initial Report, Ex. C) at ¶¶ 189–93. Anker's motion rests primarily on a mischaracterization of Dr. Williams's report. Anker argues that Dr. Williams's report requires that the accused products also measure voltage, in addition to current, to be equivalent to the claimed input power monitor. Docket No. 109 at 9. Dr. Williams's opinions require nothing of the sort. He merely remarks that "***[f]or example***, . . . the input power can be measured directly or calculated using the measured primary coil current and the voltage provided by the power supply." Docket No. 102-3 (Williams Initial Report, Ex. C) at ¶ 193. Dr. Williams's function-way-result opinions do not explicitly require the measurement of voltage for the accused products to be equivalent. Rather, Dr. Williams opines that "operating current e.g. primary coil current is indicative of the power, according to the '461 patent" and measurement of current forms the basis for his DOE theory. *Id.* at ¶ 192. Although Anker contends that alternative Qi standard designs measure both voltage and current, whereas the Qi standard designs followed by the accused products measure only current, that makes no difference to whether the accused products are equivalent to the asserted claim of the '461 Patent. Docket No. 85 at 13–14.

At the hearing, Anker indicated that the most analogous case that shows that summary judgment is warranted is *NexStep, Inc. v. Comcast Cable Communications, LLC*, 119 F.4th 1355

(Fed. Cir. 2024), *cert. denied*, 145 S. Ct. 2794 (2025). Docket No. 182 (Hearing Tr.) at 28:20–29:18. However, that case is distinguishable. In *NexStep*, the Federal Circuit affirmed the district court's grant of judgment as a matter of law of no infringement under the DOE. 119 F.4th at 1369, 1373, 1375. Only cursory testimony supported the jury's DOE finding, and the Federal Circuit determined that none of the testimony "identified a particular element or elements" in the accused product that were equivalent to the claim limitation. *Id.* at 1373. Here, Dr. Williams's opinions set out how the accused products' measurement of current is equivalent to the claimed "input power monitor." Docket No. 102-3 (Williams Initial Report, Ex. C) at ¶¶ 189–93. His DOE analysis incorporates by reference his literal infringement opinions in which he opines that each of the accused products measure the current because they adhere to certain Qi standard designs. *Id.* at ¶¶ 37, 39–49, 92–102, 189.

* * *

In summary, Anker's Partial Motion for Summary Judgment of Noninfringement of U.S. Patent No. 8,626,461 (Docket No. 85) is **DENIED-IN-PART** with respect to no infringement under the DOE and no literal infringement regarding the accused products practicing EPP. Anker's partial motion for summary judgment of no literal infringement (Docket No. 85) is otherwise **GRANTED-IN-PART**.

VI. Anker's Partial Motion for Summary Judgment of Noninfringement of U.S. Patent Nos. 9,006,937 and 8,981,598 (Docket No. 86)

Powermat asserts claims 1, 3, and 5 of the '598 Patent against Anker. Docket No. 99-3 (Williams Initial Report, Ex. D) at ¶ 15. In addition, Powermat asserts claims 9–11 of the '937 Patent, which depend on unasserted claim 8, against Anker. Docket No. 99-4 (Williams Initial Report, Ex. E) at ¶ 17. Both claim 1 of the '598 Patent and claim 8 of the '937 Patent generally encompass "[a]n inductive power outlet for transmitting power to at least one inductive power

receiver." *See, e.g.*, Docket No. 1-5 ('598 Patent) at 22:63–64; Docket No. 1-6 ('937 Patent) at 23:49–50 (similar). Claim 1 of the '598 Patent requires, among other limitations, "a signal detector operable to detect ***instruction signals*** from said inductive power receiver concurrently with power transfer." Docket No. 1-5 ('598 Patent) at 23:8–10 (emphasis added). Similarly, claim 8 of the '937 Patent recites "a driver operable to provide an oscillating driving voltage to the primary inductive coil according to ***instruction signals*** received concurrently with inductive power transfer between the primary and secondary inductive coils." Docket No. 1-6 ('937 Patent) at 23:57–61 (emphasis added). Dr. Williams opines that the accused products infringe these limitations because the accused products are required by the Qi standard to use Control Error Packets that constitute "instruction signals" that aid in the regulation of power. Docket No. 99-3 (Williams Initial Report, Ex. D) at ¶ 130; Docket No. 99-4 (Williams Initial Report, Ex. E) at ¶ 111.

A. Literal Infringement

Anker's motion contends that summary judgment of no literal infringement is warranted because the Control Error Packets cannot constitute "instruction signals" in light of the Court's *Markman* Order and other infringement positions that Powermat has taken. Docket No. 86 at 1. According to Anker, "[i]n the *Markman* Order, the Court rejected Powermat's assertion that a 'feedback signal' is a type of 'instruction signal.' " *Id.* at 7 (citing Docket No. 76 at 27). Because Dr. Williams accuses the Control Error Packets of being "feedback signals" in the context of infringement of the '696 Patent, Anker contends that a reasonable jury could not conclude that the same Control Error Packets are also "instruction signals" in the context of the '937 and '598 Patents. *Id.* at 8. Anker posits that the Control Error Packets merely provide "a measure for deviation between the Power Receiver's target and actual operating points," which does not involve instructions. *Id.* at 9 (quoting Docket No. 86-2 (Williams Initial Report, Ex. D) at ¶ 130).

In response, Powermat argues that its position that the Control Error Packets embody both "feedback signals" and "instruction signals" is not inconsistent with the *Markman* Order. Docket No. 99 at 3. According to Powermat, Anker's arguments to the contrary do not adequately address the *Markman* Order's clarification that "the same set of electrons" could "operate as both a 'feedback signal' and an 'instruction signal' depending on the circuit configuration." Docket No. 76 at 28 n.2; Docket No. 99 at 3. Further, Powermat argues that the *Markman* Order explicitly "rejected Anker's construction requiring the signals to be independent and separately identifiable," and "explained that 'the claims do not require the presence of these signals to infringe' but only 'require certain structure operable to detect these signal types.' " Docket No. 99 at 3 (quoting Docket No. 76 at 27). Powermat contends that the Control Error Packets serve one purpose when acting as "instruction signals" and another when acting as "feedback signals." Docket No. 125 at 1–2. According to Powermat, to the extent that Anker and its experts disagree on whether the accused products infringe this limitation, this is a battle of the experts that can only be resolved by the jury. Docket No. 99 at 4–5.

Powermat raises a genuine issue of material fact that forecloses summary judgment. The Cout's *Markman* Order does not foreclose the possibility that "the same set of electrons" could "operate as both a 'feedback signal' and an 'instruction signal' depending on the circuit configuration." Docket No. 76 at 28 n.2. The Court agrees with Powermat that the Court's construction only requires that the Control Error Packets serve different purposes when acting as "instruction signals" or "feedback signals." *Id.* And Dr. Williams offers opinions that the Control Error Packets serve different purposes when they are functioning as "instruction signals" or "feedback signals." For example, regarding their function as "feedback signals," Dr. Williams opines that "Control Error Packets contain[] Control Error Values that ***pertain to the operational***

parameters of the electric load. For example, the Control Error Value[s] pertain to desired Control Point of the Power Receiver such as desired output current, desired output voltage, [and] temperature measured in the mobile device." Docket No. 99-5 (Williams Initial Report, Ex. F) at ¶ 202 (emphasis added). Thus, according to Dr. Williams, when being used as a feedback signal, the Control Error Packets communicate information to the power receiver regarding the operating parameters of the electric load. Whereas when being used as an instruction signal, Dr. Williams maintains that the Control Error Packets function as "regulation signals" that regulate the power transmission of the inductive coupling. Docket No. 99-3 (Williams Initial Report, Ex. D) at ¶¶ 127, 130. Dr. Williams's opinions raise a genuine issue of material fact as to whether the Control Error Packets constitute "instruction signals."

B. Doctrine of Equivalents

In the alternative, Dr. Williams opines that Anker's accused products are equivalent to elements 1.c and 1.h of claim 1 of the '598 Patent. Docket No. 99-3 (Williams Initial Report, Ex. D) at ¶¶ 222–26. Element 1.c recites a "trigger sensor." *Id.* at ¶ 224. Element 1.h requires the claimed driver to "stop driving said oscillating voltage if no instruction signal is received during said time duration." *Id.* at ¶ 226.

Anker also moves for summary judgment of noninfringement on Powermat's DOE theory for the '598 Patent. Docket No. 86 at 12. According to Anker, Dr. Williams fails to sufficiently analyze each step of the function-way-result test and fails to show how each accused product is equivalent to the asserted claim elements. *Id.* at 12–13. In particular, regarding element 1.c, Anker argues that Dr. Williams fails to address the "function" segment of the function-way-result test. *Id.* at 12. As for element 1.h, Anker argues that Dr. Williams does not address the "way" portion of the function-way-result test. *Id.* at 13.

Powermat counters that Dr. Williams provides a sound DOE analysis. Docket No. 99 at 7–8. According to Powermat, Dr. Williams does identify a function, way, and result and establishes that each relevant limitation is equivalent. *Id.* Further, Powermat argues that Dr. Williams's opinions do bear a sufficient nexus to the accused products because they must be read in the context of his literal infringement opinions, which are incorporated by reference in his DOE section. *Id.* at 7.

The Court determines that summary judgment is warranted for only element 1.c. Notably, the function-way-result-test does not require "recitation of the magic words 'function,' 'way,' and 'result,' " but only sufficient "evidence to establish what the function, way, and result of both the claimed device and the accused device are, and why those functions, ways, and results are substantially the same." *Malta v. Schulmerich Carillons, Inc.*, 952 F.2d 1320, 1327 n.5 (Fed. Cir. 1991) (emphasis removed). However, "[t]hough 'infringement under the doctrine requires "only" substantial identity, substantial identity must be proven with regard to all three elements of the' function-way-result test." *NexStep*, 119 F.4th at 1373 (quoting *Lear Siegler, Inc. v. Sealy Mattress Co. of Mich.*, 873 F.2d 1422, 1425 (Fed. Cir. 1989)).

Regarding element 1.c, Dr. Williams's opinions fail to raise a genuine issue of material fact as to whether the sensors recommended for analog ping alleged to be included in the accused products are equivalent to the claimed "trigger sensor." *See* Docket No. 99-3 (Williams Initial Report, Ex. D) at ¶¶ 224–25. Dr. Williams does not offer opinions on how the accused sensors perform substantially the same function as the "trigger sensor." Powermat argues that Dr. Williams addressed the "function" prong of the test by explaining that

> [f]or example, each of the sensors detect[s] a change in a[n] electro-magnetic property at the interface surface of the power outlet, e.g. electrical current (current sensor for resonance shift detection), capacitance (capacitance sensing circuit) in

> substantially ***the same way*** as detecting a change in local magnetic field (Hall switch), detecting a piezo-electric effect.

Docket No. 99-3 (Williams Initial Report, Ex. D) at ¶ 224 (emphasis added). However, Dr. Williams never used the word "function," rather he made it clear in his report that he was addressing the "way" portion of the test. *Id.* Even were the Court to overlook such formalities, Dr. Williams's purported "function" opinion does not explain how the sensors recommended for analog ping perform the same function as the claimed "trigger sensor." Instead, the opinion explains how the accused sensors operate in substantially the same way as the "trigger sensor" by "detect[ing] a change in a[n] electro-magnetic property" in a manner equivalent to the claimed invention. Docket No. 99-3 (Williams Initial Report, Ex. D) at ¶ 224. In substance, such an opinion does not show how the accused sensors perform substantially the same function. Were the Court to nevertheless accept this prong as amounting to a "function" opinion, Dr. Williams would not be offering distinct "function" and "way" opinions. Powermat identifies no other opinions in Dr. Williams's report that could serve as a separate basis to show that the accused sensors operate in substantially the same way. In such circumstances, Powermat fails to provide sufficient evidence upon which a reasonable jury could conclude that there is "substantial identity . . . with regard to all three elements of the function-way-result test." *NexStep*, 119 F.4th at 1373 (internal quotations omitted). Accordingly, Powermat fails to raise a genuine issue of material fact on element 1.c.

By contrast, Powermat's DOE case survives summary judgment with respect to element 1.h. As to the function element, Dr. Williams opines that

> [e]ach of the signal detectors identified in element [1.h], *e.g.*, Communications & Control Unit, performs at least the function of removing the transmission power signal if no instruction signal, such as a Control Error Packet, is detected, which is substantially the same function as "stop driving said oscillating voltage if no instruction signal is received during said time duration."

Docket No. 99-3 (Williams Initial Report, Ex. D) at ¶ 226. Further, Dr. Williams provides the "way" segment of his function-way-result analysis by stating that "[e]ach of the signal detectors identified in element [1.h] operates by removing the power signal or reducing the Primary Cell current to zero, which is substantially the same as stop driving the oscillating voltage." *Id.* Finally, Dr. Williams opines that the accused signal detectors achieve substantially the same result as the claimed logic, which is "to prevent transmission of power when a secondary device is absent." *Id.* The fact that Dr. Williams did not recite the word "way" in his function-way-result analysis does not makes a difference as to whether his opinions are sufficient to raise a genuine dispute of material fact. *Malta*, 952 F.2d at 1327 n.5 (explaining that such "magic words" are not required).

The Court similarly rejects Anker's arguments that Dr. Williams's opinions on element 1.h are insufficient because his DOE section does not cite to evidence or identify the equivalent elements of the accused products. Docket No. 86 at 12–13. Although a "patentee must provide particularized testimony and linking argument as to the insubstantiality of the differences between the claimed invention and the accused device or process on a limitation-by-limitation basis," a patentee need not " 're-start his testimony at square one when transitioning to a doctrine of equivalents analysis.' " *Maxell, Ltd. v. Apple Inc.*, No. 5:19-CV-00036-RWS, 2020 WL 8269548, at *26 (E.D. Tex. Nov. 11, 2020) (quoting *Paice LLC v. Toyota Motor Corp.*, 504 F.3d 1293, 1305 (Fed. Cir. 2007)). Indeed, an "expert may explicitly or implicitly incorporate his earlier testimony into the DOE analysis." *Id.* (quoting *Fractus, S.A. v. Samsung Elecs. Co.*, 876 F. Supp. 2d 802, 819 (E.D. Tex. 2012)).

Here, Dr. Williams incorporates by reference his literal infringement opinions into the DOE section of his report. Docket No. 99-3 (Williams Initial Report, Ex. D) at ¶ 222. Regarding element 1.h, Dr. Williams explains, with reference to Qi standard excerpts, that "each of the

Accused '598 Products is required to stop applying power to the primary coil after a limited time duration (e.g. $T_{timeout} + t_{terminate}$) if it fails to receive a packet e.g. Control Error Packet from the power receiver." *Id.* at ¶ 186–87. Anker does not challenge these opinions as unsupported or conclusory. Accordingly, Dr. Williams's DOE theory on element 1.h is sufficiently linked to the accused products to withstand summary judgment.

* * *

Anker's Partial Motion for Summary Judgment of Noninfringement of U.S. Patent Nos. 9,006,937 and 8,981,598 (Docket No. 98) is **GRANTED-IN-PART** with respect to no infringement under DOE regarding claim element 1.c of the '598 Patent and otherwise **DENIED-IN-PART**.

VII. Powermat's Motion for Summary Judgment of Defendant's Patent Misuse, Unclean Hands, and Damages Defenses (Docket No. 89)

A. Patent Misuse and Unclean Hands

Powermat argues that Anker does not adduce sufficient evidence to survive summary judgment for its patent misuse and unclean hands defenses. Docket No. 89 at 1.

"Patent misuse is . . . established when the patentee engages in conduct that impermissibly broadens a patent's physical or temporal scope with anticompetitive effect." *Netlist, Inc. v. Micron Tech., Inc.*, No. 2:22-CV-203-JRG-RSP, 2024 WL 698135, at *1 (E.D. Tex. Jan. 15, 2024), *report and recommendation adopted*, No. 2:22-CV-00203-JRG-RSP, 2024 WL 692114 (E.D. Tex. Feb. 19, 2024). "To successfully invoke the unclean hands doctrine, the defendant must point to an unconscionable act by the patentee" that bears " 'an immediate and necessary relation to the equity' of the relief that the patentee seeks." *Erfindergemeinschaft UroPep GbR v. Eli Lilly & Co.*, No. 2:15-CV-1202-WCB, 2017 WL 275465, at *7 (E.D. Tex. Jan. 20, 2017) (quoting *Keystone Driller Co. v. Gen. Excavator Co.*, 290 U.S. 240, 245 (1933)). A defendant must prove patent

misuse or unclean hands by clear and convincing evidence. *Saint Lawrence Commc'ns LLC v. Motorola Mobility LLC*, No. 2:15-CV-351-JRG, 2018 WL 915125, at *6 (E.D. Tex. Feb. 15, 2018).

Powermat argues that Anker's defenses fail as a matter of law because Anker's only disclosed basis for relief is that Powermat refused to license its standard essential patents at a FRAND rate. Docket No. 89 at 1. According to Powermat, a FRAND violation "is not determinative of patent misuse." *Id.* (citing *Saint Lawrence*, 2018 WL 915125, at *7). Moreover, Powermat argues that there is no evidence that the rates offered to Anker were not FRAND or that Anker's breach of FRAND harmed competition. *Id.* at 9, 12, 14. Powermat further contends that Anker forfeited its equitable defenses by refusing to negotiate in good faith with Powermat. *Id.* at 12. According to Powermat, summary judgment should be granted on Anker's unclean hands defense for substantially the same reasons. *Id.* at 1, 17–18.

In response, Anker argues that seeking supra-FRAND damages can alone establish patent misuse where a party is contractually obligated to license at FRAND rates, as Powermat is here. Docket No. 97 at 6–7 (citing *Multimedia Pat. Tr. v. Apple Inc.*, No. 10-CV-2618-H (KSC), 2012 WL 6863471, at *23 (S.D. Cal. Nov. 9, 2012)). In particular, Anker contends that Powermat breached its FRAND obligations by seeking to present damages theories in this case that the royalty rate for just one of the five asserted patents could be equivalent to the published rate that Powermat offers for its entire portfolio of 227 patents. *Id.* at 7. According to Anker, Powermat is attempting to "expand the scope of [its] patents because it seeks to expand the value of a single Asserted Patent beyond what it is entitled to, by using that one patent to extract royalties equaling the value of Powermat's entire worldwide portfolio, without the promise to not repeat this action for every other patent in the portfolio." *Id.* In addition, Anker argues that such a damages demand

is anticompetitive because it prevents Anker from selling its products at competitive prices compared to Powermat's preferred licensees. *Id.* at 8. In its sur-reply, Anker clarified that it does not only challenge Powermat's damages theories as constituting patent misuse or unclean hands. Docket No. 123 at 3–5. Rather, Anker bases its defenses on the "entirety of Powermat's conduct" both pre-suit and post-filing. *Id.*

Anker fails to establish a genuine issue of material fact sufficient for its patent misuse and unclean hands defenses to survive summary judgment. *Saint Lawrence Communications LLC v. Motorola Mobility LLC* addressed a similar scenario. 2018 WL 915125, at *6–8. In that case, the court determined that a patentee's case was not subject to a patent misuse defense where, among other things, the patentee (1) allegedly breached its FRAND obligations by seeking an injunction in Germany, and (2) "negotiat[ed] different rates and terms for different licensees when presented with different circumstances." *Id.* at *7–8. After examining cases from several different district courts, *Saint Lawrence* held that "[w]hile a breach of FRAND obligations may be relevant to this inquiry, a breach of FRAND is not determinative of patent misuse." *Id.* at *7. In disposing of the patent misuse defense, the court noted that the accused infringer failed to establish that any of the supposed FRAND violations "harmed competition." *Id.* at *7–8.

Similarly, here, the Court holds that Anker has failed to adduce sufficient evidence such that a reasonable factfinder could conclude that Powermat impermissibly broadened its patents' physical or temporal scope with anticompetitive effect. *Netlist*, 2024 WL 698135, at *1. Even if Anker can establish that Powermat's damages theories or other pre-suit conduct violated FRAND, that alone is insufficient to demonstrate patent misuse. *Saint Lawrence*, 2018 WL 915125, at *7.

Anker's patent misuse defense fails principally because Anker adduces no evidence whatsoever, let alone clear and convincing evidence, that Powermat's damages demand or pre-suit

conduct had an anticompetitive effect. *Cf. Saint Lawrence*, 2018 WL 915125, at *7–8. Federal Circuit precedent requires that "[t]o sustain a misuse defense involving a licensing arrangement not held to have been per se anticompetitive by the Supreme Court, a factual determination must reveal that the overall effect of the license tends to restrain competition unlawfully in an appropriately defined relevant market." *Princo Corp. v. Int'l Trade Comm'n*, 616 F.3d 1318, 1334 (Fed. Cir. 2010) (en banc) (quoting *Windsurfing Int'l Inc. v. AMF, Inc.*, 782 F.2d 995, 1001–02 (Fed. Cir. 1986)).

Here, Anker has not argued or adequately explained how Powermat's actions are per se anticompetitive as defined by Supreme Court precedent. Anker only contends, via its attorneys, that Powermat's damages demands and pre-suit negotiations with Anker were discriminatory and had an anticompetitive effect. Docket No. 97 at 8. Moreover, Anker does not argue that such discriminatory licensing practices are analogous or similar to other per se patent misuse violations. Such violations include "arrangements in which a patentee effectively extends the term of its patent by requiring post-expiration royalties." *Virginia Panel Corp. v. MAC Panel Co.*, 133 F.3d 860, 869 (Fed. Cir. 1997) (citing *Brulotte v. Thys Co.,* 379 U.S. 29, 33 (1964)). " '[T]ying' arrangements in which a patentee conditions a license under the patent on the purchase of a separable, staple good" were also once part of the per se category. *Id.* But 35 U.S.C. § 271(d)(5) abrogated that classification, and parties seeking to invoke a patent misuse defense on such a basis must offer proof "that the [patentee] has market power in the tying product." *Ill. Tool Works Inc. v. Indep. Ink, Inc.*, 547 U.S. 28, 46 (2006). Notably, other courts have determined that discriminatory pricing arrangements, like those Anker alleges, are not per se anticompetitive. *See, e.g.*, *USM Corp. v. SPS Techs., Inc.*, 694 F.2d 505, 512–13 (7th Cir. 1982) (applying the rule of reason to a patent misuse

defense premised on discriminatory pricing and explaining that "no general principle of antitrust law forbids charging different prices to different customers").

In any event, as a matter of antitrust law, the Supreme Court has concluded that the party "seeking application of the *per se* rule must present a threshold case that the challenged activity falls into a category likely to have predominantly anticompetitive effects." *Nw. Wholesale Stationers, Inc. v. Pac. Stationery & Printing Co.*, 472 U.S. 284, 298 (1985); *see also Med. Ctr. at Elizabeth Place, LLC v. Atrium Health Sys.*, 922 F.3d 713, 731 (6th Cir. 2019) ("In this context, [the plaintiff's] failure to produce any on-point precedent is damning, as we refuse to apply the per se rule in the absence of judicial experience with the challenged restraint."). Because Anker fails to make such a threshold showing, the rule of reason applies. And Anker fails to meet its burden to adduce clear and convincing evidence such that a reasonable factfinder could conclude that Powermat's conduct actually had an anticompetitive effect on the relevant market. *Cf. Princo*, 782 F.2d at 1338 ("Princo had the burden of showing that the hypothesized agreement had an actual adverse effect on competition in the relevant market."); *SPEX Techs. Inc v. Kingston Tech. Corp.*, No. SACV 16-01790 JVS (AGRX), 2020 WL 4342254, at *23–24 (C.D. Cal. June 16, 2020) (dismissing patent misuse defense at summary judgment where defendant "failed to provide any evidence of anticompetitive effects as a result of [the patentee's] conduct"); *USM*, 694 F.2d at 512–14 (affirming dismissal of a patent misuse defense where the defendant only pointed to an alleged discriminatory pricing scheme and "presented no evidence of actual or probable anticompetitive effect").

At best, Anker alleges—in a conclusory manner—that it suffered from Powermat's allegedly discriminatory pricing scheme. But, generally, antitrust law requires proof of harm "to the competitive process," "not just to a single competitor." *NYNEX Corp. v. Discon, Inc.*, 525 U.S.

128, 135 (1998). Further, unsupported attorney argument that Powermat's conduct was anticompetitive cannot save Anker's patent misuse defense from summary judgment. *Blue Spike*, 2016 WL 3653516, at *4.

Anker argues that "Powermat concedes that its refusal to license at a FRAND rate 'may suggest . . . conduct that may have anticompetitive effects.' " Docket No. 97 at 8 (internal quotation marks omitted) (quoting Docket No. 89 at 10). However, the keyword in that sentence is "may." Powermat did not admit that Anker had adduced sufficient evidence of an anticompetitive effect. And although a violation of a FRAND obligation could demonstrate anticompetitive effects, courts in this Circuit have determined that it is generally "not anticompetitive for an SEP holder to violate its FRAND obligations." *Cont'l Auto. Sys., Inc. v. Avanci, LLC*, 485 F. Supp. 3d 712, 734 (N.D. Tex. 2020), *vacated and remanded on other grounds*, 27 F.4th 326 (5th Cir. 2022), *reh'g granted, opinion withdrawn*, 36 F.4th 1185 (5th Cir. 2022), and *on reh'g aff'd*, No. 20-11032, 2022 WL 2205469 (5th Cir. June 21, 2022).[10] That is not to say that such conduct may never have anticompetitive effects. Indeed, many courts have determined that an antitrust violation may result where a patentee intentionally falsely promises to license its patents at a FRAND rate to induce a standard setting organization to designate his or her patents standard essential. *See, e.g.*, *Broadcom Corp. v. Qualcomm Inc.*, 501 F.3d 297, 314 (3d Cir. 2007) ("Deception in a consensus-driven private standard-setting environment harms the competitive process by obscuring the costs of including proprietary technology in a standard and increasing

[10] Although the Fifth Circuit initially vacated the district court's decision in *Avanci* because the Fifth Circuit determined that the plaintiff lacked Article III standing, the Fifth Circuit withdrew that opinion and subsequently affirmed the district court's judgment "that [the plaintiff] failed to state claims under Sections 1 and 2 of the Sherman Act." *Cont'l Auto. Sys., Inc. v. Avanci, L.L.C.*, No. 20-11032, 2022 WL 2205469, at *1 (5th Cir. June 21, 2022).

the likelihood that patent rights will confer monopoly power on the patent holder."). Here, Anker does not allege that Powermat committed such misrepresentations, however.

In addition, a reasonable factfinder could not conclude that Powermat's conduct harmed competition on the basis of Mr. Kline's testimony that Powermat offered discriminatory rates. Docket No. 123 at 3, 7 (citing Docket No. 123-1 (Kline Report) at ¶¶ 323–31). Such testimony fails to explain how Powermat's actions had an "actual adverse effect on competition in the relevant market." *Princo*, 616 F.3d at 1338. Moreover, the "negotiating [of] different rates and terms for different licensees when presented with different circumstances" does not alone demonstrate patent misuse. *Saint Lawrence*, 2018 WL 915125, at *8; *see also USM*, 694 F.2d at 512–14.

Dr. Ozluturk's admission does not change the Court's conclusion. Although Dr. Ozluturk admitted that Powermat would assert another set of patents if, at the conclusion of litigation, only the asserted patents were licensed, Docket No. 97-5 (Ozluturk Dep.) at 174:2–12, Dr. Ozluturk's testimony is only equivocal and speculatively comments on contingencies that have yet to come to pass. Further, Dr. Ozluturk's testimony does not address whether Powermat's damages theory or other pre-suit conduct would harm competition. Viewing the facts in the light most favorable to Anker, a reasonable factfinder could not conclude that such equivocal testimony constitutes clear and convincing evidence sufficient to establish that Powermat's conduct impermissibly broadens the scope of its patents with anticompetitive effect. *Cf. Stahl*, 283 F.3d at 272 ("Such equivocal and ill-supported testimony is simply insufficient to preclude summary judgment on this inadequate warning claim.").

Having concluded that Anker's evidence does not raise a genuine issue of material fact regarding patent misuse, that evidence certainly does not meet the more exacting standard required

to demonstrate unclean hands. Viewing the facts in the light most favorable to Anker, a reasonable factfinder could not conclude on the basis of Anker's evidence that Powermat's conduct "shocks the moral sensibilities of the judge." *Erfindergemeinschaft UroPep*, 2017 WL 275465, at *7. Powermat's alleged discriminatory licensing practices and Dr. Ozluturk's equivocal testimony are insufficient to demonstrate by clear and convincing evidence that "the patent claims themselves have [] been infected with fraud or perjury."[11] *iFLY Holdings LLC v. Indoor Skydiving Germany Gmbh*, No. 2:14-CV-1080-JRG-RSP, 2016 WL 3675136, at *2 (E.D. Tex. Mar. 25, 2016). This is especially true given that the Court has determined that Powermat's entire portfolio damages theory is admissible. *See supra* Section II.A; *cf. Oxbo Int'l Corp. v. H&S Mfg. Co., Inc.*, No. 15-CV-292-JDP, 2017 WL 2272060, at *8 (W.D. Wis. May 23, 2017) (dismissing, at summary judgment, an unclean hands defense where the defendant argued that the patentee had taken baseless positions in litigation, but the court concluded that the patentee's "claims ha[d] more than arguable merit"). Accordingly, Anker's defenses fail.[12]

Anker's arguments to the contrary are inapposite. Anker primarily relies on *Multimedia Patent Trust v. Apple Inc.* to save its defenses. 2012 WL 6863471. But *Saint Lawrence* considered and distinguished *Multimedia*. *Saint Lawrence*, 2018 WL 915125, at *6. Notably, "[i]n *Multimedia*, the district court observed, without extensive analysis, that 'several courts have held

[11] Powermat cites *Broadcom Corp. v. Qualcomm Inc.*, No. SA-CV-05-467-JVS-RN-BX, 2009 WL 10671468 (C.D. Cal. Feb. 5, 2009), and *InterDigital Communications, Inc. v. ZTE Corp.*, No. 1:13-CV-00009-RGA, 2014 WL 2206218 (D. Del. May 28, 2014), to establish that FRAND violations can give rise to an unclean hands defense, but both are inapposite. Docket No. 97 at 14–15. In *Broadcom*, the Court had no occasion to consider whether a FRAND violation could support an unclean hands defense because the movant did not argue that such violations could not form a predicate for such a defense. 2009 WL 10671468, at *5–6. And *InterDigital* only referenced that the defendants were asserting an unclean hands defense; the case did not rule on the viability of that defense. 2014 WL 2206218, at *3 n.2.

[12] Because the Court resolves these defenses on the foregoing grounds, the Court need not address Powermat's other arguments.

that a patentee's violation of its [F]RAND obligations may ***in certain circumstances*** constitute patent misuse.' " *Saint Lawrence*, 2018 WL 915125, at *6 (emphasis in original) (quoting *Multimedia*, 2012 WL 6863471, at *23). *Multimedia* did not categorically decide that a breach of FRAND obligations could always amount to patent misuse. "Indeed, the Federal Circuit has cautioned against a broad application of the patent misuse doctrine." *Saint Lawrence*, 2018 WL 915125 at *7 (citing *Princo*, 616 F.3d at 1329). And in these circumstances, the Court concludes that a reasonable factfinder could not determine that Powermat's conduct amounted to patent misuse, given, among other reasons, the absence of any evidence of Powermat's conduct having an anticompetitive effect and that the Court deemed Powermat's entire portfolio damages theory admissible. *See supra* at 66–67, 69–70.

Anker further argues that *Saint Lawrence* is distinguishable because *Saint Lawrence* was decided after a jury trial, and the Court should similarly await relevant findings from the jury before deciding these defenses. Docket No. 97 at 8–9. However, *Saint Lawrence* likewise decided that, even if the patentee had breached its FRAND obligations, that alone did not constitute patent misuse. *Id.* at *7. Moreover, the patentee in *Saint Lawrence* did not move for summary judgment on the defendant's patent misuse defense. *See* Order, *Saint Lawrence Commc'ns LLC v. ZTE Corp., et al.*, No. 2:15-CV-00349-JRG (E.D. Tex. Feb. 8, 2017), ECF No. 404. Here, where Anker adduces no evidence whatsoever that Powermat's conduct had an anticompetitive effect and the Court admitted Powermat's entire portfolio damages theory, no reasonable factfinder could conclude that Anker has proven its defenses by clear and convincing evidence, and the Court need not await a jury trial to dispose of these defenses. *See supra* at 66–67, 69–70.

B. Limitation of Damages Defense

Powermat argues that Anker's limitation of damages defenses under 35 U.S.C. §§ 286 and 287 must be dismissed because they fail as a matter of law. Docket No. 89 at 18. First, Powermat

explains that § 286 limits damages to six years prior to the filing of suit, but Powermat does not seek damages from more than six years prior. *Id.* Second, Powermat contends that § 287 is "not an affirmative defense," *id.* at 19 (quoting *Arctic Cat Inc. v. Bombardier Recreational Prods. Inc.*, 876 F.3d 1350, 1366 (Fed. Cir. 2017)), and no provision of it limits damages where an "infringer was notified of the infringement and continued to infringe thereafter," *id.* (quoting 35 U.S.C. § 287(a)). According to Powermat, Anker has been on notice of its infringement throughout the period for which Powermat seeks damages. *Id.*

Anker does not challenge this aspect of Powermat's motion and represents that it will not present these defenses at trial. Docket No. 97 at 15. Accordingly, Anker requests that the Court deny Powermat's motion as moot. *Id.*

Given that Anker unilaterally withdraws its limitation of damages defenses, the Court concludes that it should treat the disposition of that defense as an adjudication on the merits, instead of denying the relief Powermat seeks as moot. *Ferguson v. Tex. Farm Bureau*, No. 6:17-CV-00111-ADA-JCM, 2021 WL 2349340, at *19 (W.D. Tex. May 19, 2021), *report and recommendation adopted*, No. 6:17-CV-00111-ADA, 2021 WL 7906826 (W.D. Tex. June 22, 2021) (recommending granting a motion for summary judgment dismissing an affirmative defense where the defendants withdrew the defense, and the court would "not permit gamesmanship to benefit" defendants).

In its reply, Powermat improperly sought to expand the relief it sought in its motion by urging the Court to "enter partial summary judgment resolving the factual issue (which affects Powermat's claims of indirect infringement (Counts 2-6) and willful infringement (Counts 2-6)) of the latest date by which Anker had notice of Powermat's infringement allegations." Docket No. 115 at 10. "It is black-letter law that arguments raised for the first time in a reply are waived

'as a matter of litigation fairness and procedure.' " *Wantou v. Wal-Mart Stores Tex.*, LLC, No. 5:17-CV-00018-RWS-CMC, 2020 WL 4664739, at *15 (E.D. Tex. Mar. 12, 2020) (quoting *Intellectual Ventures II LLC v. Sprint Spectrum, L.P.*, No. 2:17-CV-00662-JRG-RSP, 2019 WL 2959568, at *3 (E.D. Tex. Apr. 18, 2019)). Accordingly, such relief is not a part of Powermat's motion and not properly before the Court. The Court declines to grant such relief.

* * *

Powermat's Motion for Summary Judgment of Defendant's Patent Misuse, Unclean Hands, and Damages Defenses (Docket No. 89) is **GRANTED**.

CONCLUSION

For the foregoing reasons, it is

ORDERED that Anker's Opposed Motion to Stay (Docket No. 165) is **DENIED**.

The Court hereby **ORDERS** that this case shall proceed to trial according to the following schedule of deadlines.

Jury Trial	February 2, 2026 immediately following jury selection in Texarkana, Texas
Jury Selection	February 2, 2026 at 9 a.m. in Texarkana, Texas
Pre-trial Conference	January 13, 2026 at 10 a.m. in Texarkana, Texas

It is further

ORDERED that, within **seven (7) days** of the entry of this Order, the parties shall submit a joint proposed docket control order that incorporates these deadlines along with any additional deadlines agreed on by the parties. The amended docket control order should include deadlines to file the proposed joint final pretrial order, responses to motions *in limine*, joint proposed jury instructions, a joint proposed verdict form, and a notice of time requested for trial. It is further

ORDERED that Anker's *Daubert* Motion to Exclude Testimony of Mr. John Jarosz (Docket No. 87) is **GRANTED-IN-PART** with respect to Mr. Jarosz's opinions regarding Anker's alleged profits, including his design-around cost and incremental benefit approaches, (Docket No. 100-2 (Jarosz Report) at ¶¶ 105–13, 219–33, 235–36, 267, 304, 329) and otherwise **DENIED-IN-PART**. It is further

ORDERED that Powermat's Opposed Motion to Strike and Exclude Certain Testimony and Opinions Offered by Philip W. Kline (Docket No. 90) is **GRANTED-IN-PART** as to paragraphs 99 and 100 (Docket No. 98-2 (Kline Report) at ¶¶ 99–100) but otherwise **DENIED-IN-PART**. It is further

ORDERED that Anker's *Daubert* Motion to Exclude Certain Opinions and Testimony of Dr. Tim Williams (Docket No. 88) is **GRANTED-IN-PART** in that Dr. Williams may not opine that (1) the "signal detector" recited in claim 1 of the '204 Patent requires multi-bit communication; and (2) the "substantially different" term recited in claim 1 of the '204 Patent and claim 1 of the '696 Patent requires "allow[ance] for some incremental change (increase or decrease) in frequency while remaining in the near-linear/linear regions of the frequency-amplitude graph." Anker's motion (Docket No. 88) is otherwise **DENIED-IN-PART**. It is further

ORDERED that Anker's Partial Motion for Summary Judgment of Noninfringement of U.S. Patent No. 8,626,461 (Docket No. 85) is **DENIED-IN-PART** with respect to no infringement under the DOE and no literal infringement regarding the accused products practicing EPP. Anker's partial motion for summary judgment of no literal infringement (Docket No. 85) is otherwise **GRANTED-IN-PART**. It is further

ORDERED that Anker's Partial Motion for Summary Judgment of Noninfringement of U.S. Patent Nos. 9,006,937 and 8,981,598 (Docket No. 86) is **GRANTED-IN-PART** with respect

to no infringement under DOE regarding claim element 1.c of the ’598 Patent and otherwise **DENIED-IN-PART**. It is further

ORDERED that Powermat’s Motion for Summary Judgment of Defendant’s Patent Misuse, Unclean Hands, and Damages Defenses (Docket No. 89) is **GRANTED**. It is further

ORDERED that the following affirmative defenses present in Anker’s Answer, Additional Defenses, and Counterclaims to Plaintiff’s Complaint for Patent Infringement (Docket No. 14) are **DISMISSED WITH PREJUDICE**: (1) Fourth Additional Defense – Limitation on Damages, and (2) Ninth Additional Defense as it relates to Patent Misuse and Unclean Hands. It is further

ORDERED that, within **seven (7) days** of the entry of this Order, the parties **SHALL** jointly move to file a redacted version of this Order. The parties’ joint motion **SHALL** provide proposed redactions, describe the confidential information in those proposed redactions, and provide good cause for each redaction. Or, if no redactions are necessary, the parties **SHALL** jointly file an unsealed and unredacted version of the Order with a cover page stating no redactions are needed.

So ORDERED and SIGNED this 18th day of November, 2025.

ROBERT W. SCHROEDER III
UNITED STATES DISTRICT JUDGE