UNITED STATES PATENT AND TRADEMARK OFFICE

BEFORE THE PATENT TRIAL AND APPEAL BOARD

Shenzhen Waydoo Intelligence Technology Co., Ltd.,
Petitioner

v.

MHL Custom Inc.
Patent Owner

Case IPR2024-00999

DECLARATION OF STEFANO BRIZZOLARA, PH.D
U.S. PATENT NO. 9,586,659
CHALLENGING CLAIMS 1, 2, 4-5, 7-11, 13, AND 15

TABLE OF CONTENTS

I. INTRODUCTION 1

II. QUALIFICATIONS AND PROFESSIONAL EXPERIENCE 1

III. MATERIALS CONSIDERED 2

IV. LEGAL PRINCIPLES 4

V. LEVEL OF ORDINARY SKILL IN THE ART 8

VI. BACKGROUND TECHNOLOGY AND ’659 PATENT OVERVIEW 9

- A. The Alleged Invention 9

VII. OVERVIEW OF THE PRIOR ART 11

VIII. CLAIM CONSTRUCTION 13

IX. SPECIFIC GROUNDS OF UNPATENTABILITY 14

- A. Ground 1 14
- B. Ground 2 46
- C. Ground 3 62
- D. Ground 4 71
- E. Ground 5 75

X. AVAILABILITY FOR CROSS EXAMINATION 81

XI. RIGHT TO SUPPLEMENT 82

XII. JURAT 82

I, Stefano Brizzolara, declare as follows:

I. INTRODUCTION

1. My name is Dr. Stefano Brizzolara. I am a Full Professor with tenure at Virginia Polytechnic Institute and State University ("Virginia Tech"). My position is in the Department of Aerospace and Ocean Engineering, where I have served as the Assistant Department Head and graduate program director from 2020 to 2023. In addition, I am a Virginia Tech Crofton Faculty Fellow for distinction in research.

2. I have been retained as an expert in this proceeding by counsel for Waydoo. I have been asked for my expert conclusions regarding the validity of claims 1, 2, 4-5, 7-11, 13, and 15 of U.S. Patent No. 9,586,659 (the "'659 Patent") (Ex-1001-USP659). For the reasons set forth below, it is my conclusion that claims 1, 2, 4-5, 7-11, 13, and 15 of the '659 patent are invalid.

II. QUALIFICATIONS AND PROFESSIONAL EXPERIENCE

3. My qualifications are stated more fully in my curriculum vitae, which is attached as Exhibit A. Below is a summary of my education, work experience, and other qualifications.

4. I earned my M.S. in Naval Architecture and Marine Engineering (1994) from the University of Genova. I earned my PhD (2000) in Naval Architecture at the University of Naples Federico II (jointly with the University of Genova) with the

thesis “Theory and Application of Numerical Methods for the Hydrodynamic Design of High Speed Ships”.

5. I was the founder of the MIT Innovative Ship Design Lab, a laboratory dedicated to the development of new design and design tools for innovative marine crafts that transferred and continue to direct at Virginia Tech. I was also the founder of Marine CFD Group, a research group at the University of Genova dedicated to the development and application of numerical methods for hydrodynamic in ship design.

6. As set forth in my CV (Exhibit A), my record of professional service includes recognitions from several professional organizations in my field of expertise, including the Royal Institution of Naval Architect, the Society of Naval Architects and Marine Engineers, and the American Society of Naval Engineers.

7. I am being compensated for my time at my ordinary hourly rate of $500. My compensation is not dependent on the outcome of these proceedings or the content of my opinions. To the best of my knowledge, I have no financial interest in either party or in the outcome of the proceedings.

III. MATERIALS CONSIDERED

8. In preparing this declaration, I have reviewed the claims, specification, and file history of the ‘044 patent and the ‘659 patent. I understand that the ‘044

patent issued on June 7, 2016, from U.S. Application No. 14/509,289, filed on October 8, 2014. The '044 patent states that it claims priority to U.S. Provisional Application No. 61/899,071, filed on October 10, 2013. I understand that the '659 patent claims to be a continuation of the '044 patent. The '659 patent issued on March 7, 2017 from U.S. Application No. 15/064,521 filed on March 8, 2016.

9. I have also reviewed and understand the reference and exhibits cited in this Declaration, including the following:

Exhibit	**Description**
1001	U.S. Patent No. 9,586,659 ("'659 Patent")
1003	Certified English Translation of Evolo slutrapport ("EvoloReport")
1004	Affidavit of Bjorn Lofgren Regarding Translation of EvoloReport
1005	Swedish-Language Version of Evolo slutrapport
1006	YouTube.com, *Evolo prototype run* [https://www.youtube.com/watch?v=a-_OCN50aWo&t=10s] ("EvoloPrototypeRun")
1007	Screenshot of EvoloPrototypeRun Page Information
1008	YouTube.com, *Evolo movie* [https://www.youtube.com/watch?v=zL9fO8tFl18] ("EvoloMovie")
1009	Screenshot of EvoloMovie Page Information
1010	YouTube.com, *Test run – the new Torqeedo 4.0 R installed on Evolo!!!* [https://www.youtube.com/watch?v=fKOQ0JwQnjc] ("EvoloTorqeedo")
1011	U.S. Patent No. 6,443,786 ("Woolley")
1012	U.S. Patent No. 4,020,782 ("Gleason")
1013	U.S. Patent No. 8,290,636 ("Manning")

Exhibit	Description
1014	Torqeedo Motor Operating Manual for Torqeedo Cruise 2.0 S/L
1015	U.S. Patent No. 9,359,044 ("'044 Patent")
1016	Prosecution History of '044 Patent
1017	Prosecution History of '659 Patent
1018	Declaration of Jakob Kuttenkeuler
1019	Affidavit of Ingmarie Rohdin Regarding English Language Translation of Batnytt Magazine Article; Swedish Language Version of Batnytt; English Translation of Båtnytt Magazine Article ("Batnytt")
1020	Affidavit of Ingmarie Rohdin Regarding Translation of Batnytt Magazine Viewership Information for 2009; Swedish Language Version of Batnytt Viewership Information; English Language Translation of Batnytt Viewership Information ("BatnyttViewership")
1021	Internet Archive Declaration of Nathaniel E Frank-White
1022	Screenshot of EvoloTorqeedo Page Information
1023	Claim Construction Order from *MHL CUSTOM, INC. v. WAYDOO USA, INC. and SHENZHEN WAYDOO INTELLIGENCE TECHNOLOGY CO., LTD*, C.A. No. 21-0091-RGA

IV. LEGAL PRINCIPLES

10. I am not an attorney. For the purposes of this declaration, I have been informed by Waydoo's counsel about certain aspects of the law that are relevant to my analysis, as stated in the following paragraphs. I have applied the legal principles in arriving at my conclusion expressed in this declaration.

11. I have been informed and understand that a patent claim is invalid if it would have been obvious to a person of ordinary skill in the art ("POSITA") at the time of the alleged invention recited in the claims. This means that, even if all of the requirements of a claim are not found in a single prior art reference, the claim is not patentable if the difference between the subject matter in the prior art and the subject matter in the claim would have been obvious to a POSTIA at the time of the alleged invention.

12. I have been informed and understand that a determination of whether a claim would have been obvious should be based upon several factors, including, among others: (1) the level or ordinary skill in the art at the time of the alleged invention; (2) the scope and content of the prior art; (3) the differences, if any, that existed between the claimed invention and the prior art; and (4) and objective considerations of non-obviousness.

13. I have been informed and understand that when determining any difference between the invention covered by the patent claims and the prior art, one should not look at the individual differences between the patent claims and the prior art in isolation, but rather consider the claimed invention as a whole and determine whether or not it would have been obvious in light of all of the prior art.

14. I have been informed and understand that a single reference can render a patent claim obvious if any differences between that reference and the claims would have been obvious to a POSITA. Alternatively, the teachings of two or more references may be combined in the same way as disclosed in the claims. I have been informed and understand that when deciding whether to combine the various items described in the prior art, the relevant question is whether the prior art combination would have been obvious to a person with ordinary skill in the art at the time of the invention. I have been further informed that it can be important to identify a teaching, suggestion, or motivation, in either the prior art or the knowledge of persons skilled in the art, that would have prompted a person or ordinary skill in the relevant field to combine the elements in the prior art in the way the claimed invention does.

15. In determining whether a combination based on either a single reference or multiple reference would have been obvious, it is appropriate to consider, among other factors:

a. whether the teachings of the prior art reference disclose known concepts combined in familiar ways, and when combined, would yield predictable results;

b. whether a POSTIA would implement a predictable variation, and would see the benefit of doing so;

c. whether a POSITA would have recognized a reason to combine known elements in the manner described in the claim;

d. whether there is some teaching or suggestion in the prior art to make the modification or combination of elements claimed in the patent; and

e. whether the innovation applies a known technique that had been used to improve a similar device or method in a similar way.

16. I have been informed and understand that one of ordinary skill in the art has ordinary creativity and is not an automaton. I have been informed and understand that in considering obviousness, it is important not to determine obviousness using the benefit of hindsight derived from the patent being considered. I have been informed and understand that a patent composed of several elements is not proved obvious merely by demonstrating that each of its elements was independently known in the prior art.

17. I have been informed and understand that to show a motivation to combine, one is not required to show how the references would be physically combined to render a claim obvious. The analysis is not focused on whether the

features of one reference can be physically incorporate into the structure of another reference, but rather whether a person of ordinary skill in the art would have been motivated to combine the teachings of the references to achieve the claimed invention. For example, a person of ordinary skill in the art would understand how predictable variations of known concepts could be combined and would recognize that where multiple tools were available in a "toolbox" of a POSITA, any tool could be chosen.

V. LEVEL OF ORDINARY SKILL IN THE ART

18. I have considered the '659 patent from the perspective of a POSITA at the time of the alleged invention. A persona of ordinary skill in the art for the '659 patent would have had at least the equivalent of a masters's degree in Aerospace or Naval Engineering, and one to two years of experience in the field of watercraft design and construction, particularly as that design and construction is related to personal watercraft design and construction and/or hydrofoil design and construction. This level of skill in the art is appropriate because concepts of hydrofoil design and construction along with appropriate fluid dynamics to teach the skills necessary to design and construct hydrofoil-based watercraft are taught in masters level courses. These concepts that would be understood would include academic teaching of flight dynamics utilizing well known texts (such as Etkin, B., & Reid, L. D. (1995)

Dynamics of Flight: Stability and Control. John Wiley & Sons). Moreover, an additional one to two years of experience in the industry would give one or ordinary skill in the art experience with how such systems are implemented in the real world. Before October 10, 2013, which would be the claimed priority date of the '659 patent if it relies on the '044 patent and the disclosures of its provisional application, I would have qualified at least as a POSITA under this standard.

VI. BACKGROUND TECHNOLOGY AND '659 PATENT OVERVIEW

A. The Alleged Invention

19. The '659 patent describes an improvement upon the powered hydrofoil surfboard by providing a personal watercraft that includes a hydrofoil that provides passive stability without the use of moveable surfaces. Ex-1001-USP659, 2:17-26.

20. Specifically, referring to Figure 1 below, the patent explains that the watercraft consists of four major components: a floatation device 101 for the user to occupy, a fixed strut 103 connected to the floatation device, a hydrofoil 102 with no moveable surfaces connected to the lower end of the strut 103, and a propulsion system 104 that is connected to the hydrofoil 102. Ex-1001-USP659, Fig 1, 3:7-4:7.

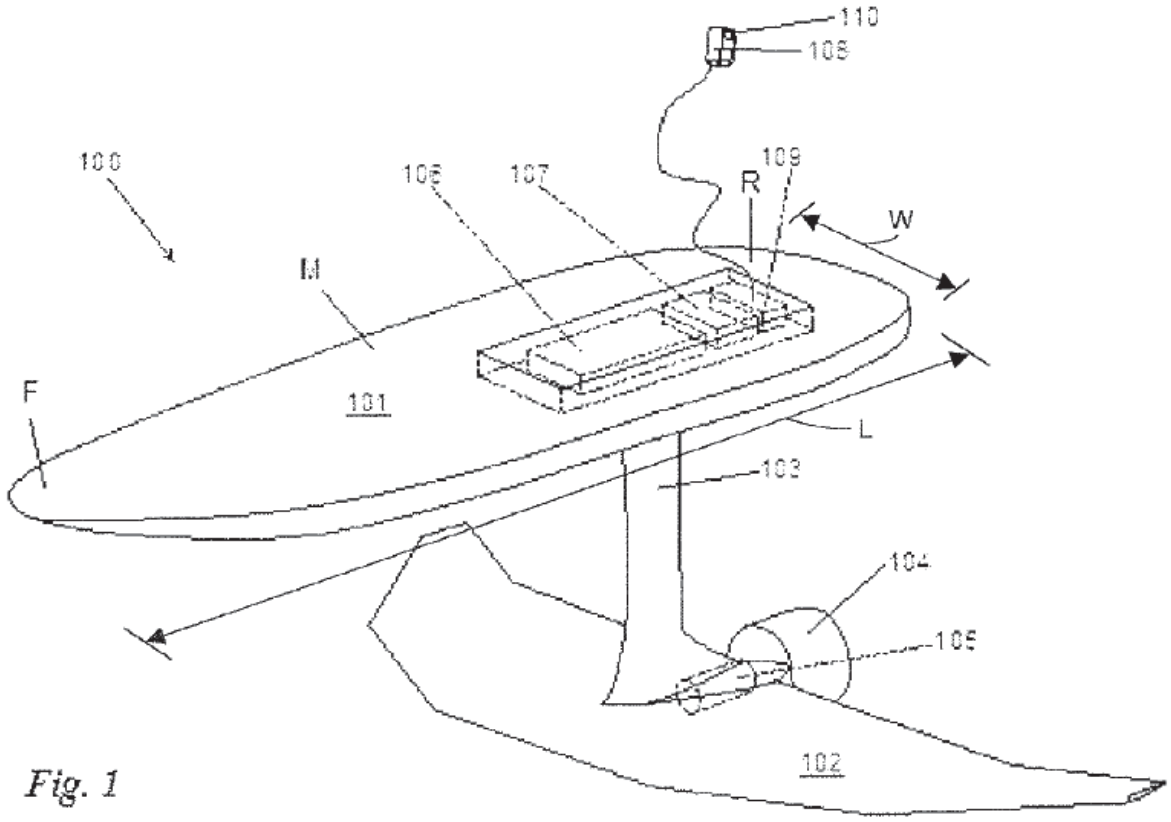

Fig. 1

21. Claim 1, the only challenged independent claim of the '659 Patent, claims each of these four structural elements as well as a negative limitation that the claimed watercraft has no moveable steering system. Ex-1001-USP659, Claim 1.

22. In addition to the four main structural elements, the watercraft can include a battery 106, motor speed controller 107, and handheld throttle system 108. Ex-1001-USP659, Fig 1, 3:1-6. These elements are claimed in different dependent claims to Claim 1.

23. The hydrofoil of the watercraft of the ‘659 patent is designed to provide passive stability to obviate the need for active control systems. Ex-1001-USP659, 6:63-65. This passive stability was intended to allow the watercraft to mimic the feel and operation of a surfboard, which typically operate based upon the use of weight shift as opposed to control mechanisms such as moveable surfaces or thrust vectoring. Ex-1001-USP659, 1:42-48.

24. The ‘659 patent discloses multiple design choices that can be made with the hydrofoil to affect its ability to provide passive stability. Ex-1001-USP659, Fig 8, 5:36-54 (disclosing the use of fixed canards, winglets, horizontal tails, and vertical tails). In addition to these specific suggestions, the ‘659 patent notes that “achieving desired levels of stability and controllability” is done through a combination of “airfoil design, planform design, and tailoring the span-wise twist distribution to achieve desired outcomes.” Ex-1001-USP659, 2:22-25.

25. The ‘659 patent notes that the degree of passive stability provided by the hydrofoil can vary, because greater stability impacts the ability for the watercraft to maneuver. Ex-1001-USP659, 2:18-22 (“desired levels of stability”), 7:11-18.

VII. OVERVIEW OF THE PRIOR ART

26. EvoloReport is a design document describing the work conducted by a Master’s Level course on Marine Design/Lightweight Design taught at Kungliga

Tekniska högskolan ("KTH") in Stockholm, Sweden. *See generally*, Ex-1003-EvoloReport.

27. The EvoloReport consists of multiple design documents, reports, analysis, and appendices tracking the design and development of the Evolo project. *See generally*, Ex-1003-EvoloReport, 5-16. The layout and presentation of the EvoloReport is typical of master levels project work by students in the area of Aerospace or Naval engineering.

28. It is my understanding that the EvoloReport was authored by the instructors and students in a marine design / lightweight-design class. Ex-1003-EvoloReport, 2. Because I have determined that a POSITA has a master's degree plus one to two years of experience, I believe that the students working on the Evolo project did not meet the standards of a POSITA.

29. It is my understanding that the EvoloReport was uploaded to a website maintained by the instructor who taught the class at KTH. At the time of the priority date of the '659 patent, it was very common for academics to maintain webpages regarding their research or the research that was being conducted by their research groups. In fact, I currently maintain a similar website disclosing the research being performed by the iShip lab research group at Virginia Tech (available at https://www.aoe.vt.edu/people/faculty/brizzolara/personal-page.html).

30. It is my understanding that an article regarding EvoloReport was published in a popular Swedish boating magazine, Båtnytt. Ex-1018-KuttenkeulerDecl. ¶¶ 29-30. It is further my understanding that Båtnytt published an article in its August 2009 issue, which described the watercraft disclosed in EvoloReport, including several photographs of the watercraft. Ex-1018-KuttenkeulerDecl. ¶¶ 29-30.

31. Because of POSITA is defined as a person who has both a masters as well as one to two years of experience working in the industry, a magazine such as Båtnytt would be typical reading and research material for a POSITA to keep track of developments in the industry. The industry experience of a POSITA would cause them to track popular publications and events related to watercraft and boats so that they would understand current trends, technology, and advancements in the field of naval engineering.

VIII. CLAIM CONSTRUCTION

32. I understand that "claim construction" is the process of determining the meaning of a term or phrase in a patent claim. I have been informed that claim construction is a matter of law and that in this proceeding, claim construction will be determined by the Patent Trial and Appeal Board ("the Board"). I understand that the proper construction of a term is how a POSITA would understand the term based

on its use and context in the claims, specification, and file history of the patent. I further understand that the claims are not to be reviewed in this proceeding under the "broadest reasonable interpretation" standard.

33. In my opinion, the prior art discloses all of the limitations of the challenged claims under any plausible construction. I have been informed and understand that in such circumstances, there is no need to construe the terms in the challenged claims.

34. To the extent that I believe that the plain and ordinary meaning of a claim term needs to be discussed more fully, I will specifically do so in the report.

IX. SPECIFIC GROUNDS OF UNPATENTABILITY

A. Ground 1

35. As explained in detail below, EvoloReport in combination with Woolley renders claims 1, 2, 4-5, 7-11, 13, and 15 would have been obvious over the combined teachings of EvoloReport and Woolley along with the knowledge of a POSITA.

1. Claim 1

(a) *[1Preamble] A passively stable, weight-shift controlled personal hydrofoil watercraft, comprising:*

36. I have been informed and understand that, in general, there are circumstances where the preamble of a claim does not limit the scope of the claim

and there are circumstances where the preamble does limit the scope of the claim. In any event, even if the preamble to claim 1 is limiting, EvoloReport discloses the claimed watercraft.

37. EvoloReport discloses a weight-shift controlled personal hydrofoil watercraft. Ex-1003-EvoloReport at 546. ("Evolo is a new type of watercraft that travels on a hydrofoil and is intended for one person. It is powered by an electric motor and is controlled only by means of center of gravity movement.").

38. EvoloReport discloses that both pitch stability and rolling stability are factors in the design of the EvoloReport hydrofoil. Ex-1003-EvoloReport at 58 – 62 ("The purpose of this analysis is to establish a configuration of the hydrofoil so that it is stable in pitch."); Ex-1003-EvoloReport at 88-98.

39. The term "stable" as used by the EvoloReport was being used to mean passive stability as contemplated by the '044 patent ("By stable is meant that if Evolo is exposed to a disturbance, it will return to its initial position."). Ex-1003-EvoloReport at 60.

40. A POSITA would have been motivated to combine the EvoloReport with Woolley along with their knowledge in the art to provide for a passively stable hydrofoil. Woolley discloses a hydrofoil that is fixedly interconnected with the lower end of a strut, the hydrofoil having no moveable surface and being designed to

provide passive static stability controlled solely by weight shift of the user. Like EvoloReport, the primary embodiment disclosed in Woolley teaches a hydrofoil – or planing blade – comprising a front blade and rear blade interconnected by a fuselage. Ex-1011-Woolley at 6:16-18. Woolley notes that the purpose of the planing blade is to provide a combination of "stability, lift, and responsiveness." Ex-1011-Woolley at 10:22-27. The ability to interchange different size front and rear planing blades in Woolley allows for providing "different stability, lift and responsiveness characteristics." Ex-1011-Woolley at 10:30-33. In addition, Woolley discloses the ability to adjust the planform and angle of attack of the rear planing blade, based upon the level stability desired between a beginner through professional rider. Ex-1011-Woolley at 16:39-19:60. Thus, Woolley discloses solutions to the stability problems discussed and contemplated throughout EvoloReport.

41. Woolley discloses a front planing blade containing a chorded upper surface that tapers towards the rear so that the upper surface has a larger surface area than the lower surface, which causes an upward lifting force on the forward blade. Ex-1011-Woolley at 11:22-30.

42. Woolley discloses the use of the rear blade with a negative angle of attack, so that the rear blade creates a downward force on the rear blade. Ex-1011-

Woolley at 16:62-17:11. The use of counteracting forces between the upward force caused by the forward blade of the hydrofoil and the downward force caused by the rear blade of hydrofoil is a well-known method for increasing pitch stability.

43. In addition to disclosing a hydrofoil that is stable in the longitudinal (pitch) plane, Woolley discloses a hydrofoil designed to be passively stable in the yaw and roll (lateral plane). As noted by the '659 Patent, yaw and roll stability are generally linked in hydrofoils. Ex-1001-USP659, 6:36-7:6. The '659 Patent notes that yaw and roll stability can be achieved through "a combination of sweep and dihederal and can also be influenced with the addition of winglets or a fin." Ex-1001-USP659 at 6:63-65. Woolley discloses the use of each of the features in its hydrofoil, along with the desire to achieve stability in yaw and roll. The front and rear blades disclosed by Woolley are swept on at least their leading edge and on both edges in some embodiments. Ex-1011-Woolley at Fig. 6A, 6B, 7A, 7B, 17:3-4. Woolley discloses a dihederal rear blade. Ex-1011-Woolley at Fig 11A.

44. Both the forward blades and rear blades disclosed within Woolley show the use of winglets or fins at their ends. Ex-1011-Woolley at Fig. 6A, 9A, 10A, 11A. Woolley discusses how these features are used to provide roll and yaw stability. Ex-1011-Woolley at 11:6-15 ("[t]he relatively large distance of the edge of the blade

from the plane of symmetry A increases the moment created by water acting on the surface of the blade”).

45. Woolley’s disclosure of both pitch stability along with roll and yaw stability through the use of the hydrofoil discloses a hydrofoil designed to provide passive static stability. Ex-1011-Woolley at 29-25 (“When the generally planar surface of the rear blade operates together with the elliptical planing surface of the front blade, these surfaces battle and counteract each other providing the desired stability characteristics. Specifically, these surfaces resist the turning of the ski from side-to-side or up and down, which is very desirable for beginners.”)

46. Woolley’s description of how it provides passive static stability far exceeds any disclosure within the ‘659 Patent regarding how to design a hydrofoil wing that is passively statically stable. The ‘659 Patent does not disclose how to design a hydrofoil wing that is passively statically stable, it simply enunciates well known aerodynamic conditions to mathematically satisfy stability and provides numerous examples of generic design choices that may provide passive static stability. *See e.g.* Ex-1001-USP659 at 2:30-35 (“A fixed canard or horizontal tail surface can also be added to further improve passive longitudinal stability …. A fixed vertical tail can be added to improve lateral stability ….).

47. To the extent that the disclosed hydrofoil in Woolley could be found to not be designed to provide passive static stability, a POSITA would have sufficient knowledge to modify the disclosed hydrofoil in Woolley such that it would be designed to provide passive static stability.

(b) *[1A1] a floatation device that has a fore-aft length greater than a lateral width, the floatation device having a top surface and a bottom surface,;*

48. EvoloReport discloses a floatation device that has a fore-aft length greater than a lateral width, with the floatation device having a top surface and a bottom surface. Ex-1003-EvoloReport, p546-550.

49. EvoloReport discloses the use of a floatation device described as a "floating body" as the portion of the disclosed watercraft. Ex-1003-EvoloReport, p.550. The EvoloReport notes that the flotation device "has sufficient volume to stay afloat with the drive." Ex-1003-EvoloReport, p.550.

50. EvoloReport further discloses a floatation device having an overall length (bow to stern) of C1, which is given as a length of 2313 millimeters. Ex-1003-EvoloReport at 546-547. EvoloReport discloses that its floatation device has an overall breadth (port to starboard) of A3, measuring 701 millimeters. Ex-1003-EvoloReport at 546-547.

51. This lateral width A3 of 701 millimeters is less than the overall aft length C1 of 2313 millimeters.

52. EvoloReport also discloses that the floatation device has a top-surface upon which a rider is disposed and a bottom-surface that is normally in the water during non-flying conditions. Ex-1003-EvoloReport at 550.

(c) *[1A2] wherein a user can be disposed on the top surface of the flotation device in a prone, kneeling, or standing position,;*

53. EvoloReport discloses that a watercraft designed for use with a "kneeling driver's position" holding the handles on the top surface of the flotation device. Ex-1003-EvoloReport at 551.

(d) *[1A3] the floatation device having a forward section, a middle section, and a rear section;*

54. The claim terms "a forward section, a middle section and a rear section" are referenced in the '044 patent as labels of the fore, middle, and aft sections of the floatation device. Ex-1001-USP659, 3:27-31; Fig. 1. A POSITA would have understood the plain and ordinary meaning of "forward section", "middle section", and "rear section" to simply be a section of the flotation device that is near or encompassing the forward end (bow) of the flotation device characterized by tapered waterlines and buttock (longitudinal) lines and a rising keel, a section of the flotation device near or encompassing the midpoint of the flotation device where the keel is

horizontal and the maximum breadth is maintained, and a section of the flotation device near or encompassing the aft end (stern) of the flotation device, where the keel stays horizontal or rises and the hull beam reduces towards the end.

55. To the extent that the floatation device claimed in the '659 Patent "may be said to have" a forward section, middle section, and a rear section, the EvoloReport discloses a floatation device showing such sections. Ex-1003-EvoloReport at 546.

(e) *[1B] a strut having an upper end and a lower end, the upper end fixedly interconnected with the flotation device between the middle section and the rear section of the flotation device.*

56. The EvoloReport discloses the use of a strut having and upper end and a lower end. Ex-1003-EvoloReport at 549-550.

57. 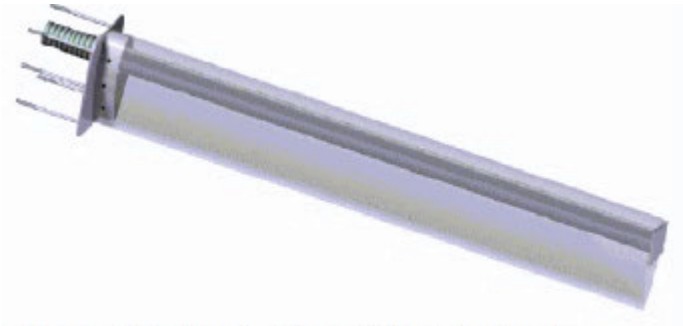

Figure. 10. Illustration of Evolo's strut

Ex-1003-EvoloReport at 549.

58. The upper end of the disclosed strut in the EvoloReport is fixedly interconnected with the floatation device. Ex-1003-EvoloReport at 211-215. EvoloReport discloses the interconnection between the strut and the floatation device occurs aft of the midpoint of the floatation device.

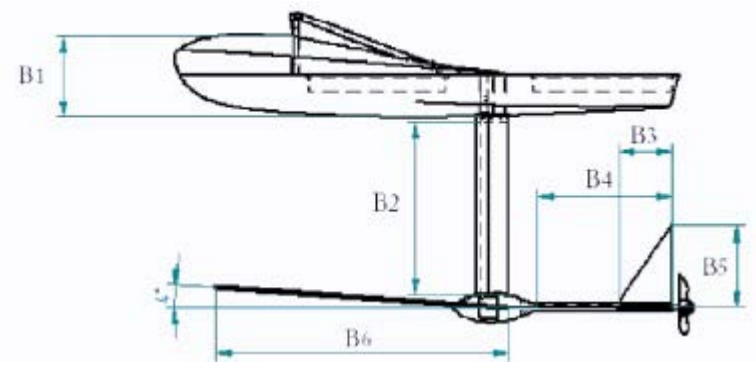

Ex-1003-EvoloReport at 546

(f) *[1C] a hydrofoil fixedly interconnected with the lower end of the strut, the hydrofoil having no moveable surface and designed to provide passive static stability controlled solely by weight shift of the user*

59. EvoloReport discloses a hydrofoil fixedly interconnected with the lower end of the strut. Ex-1003-EvoloReport at 546, 549

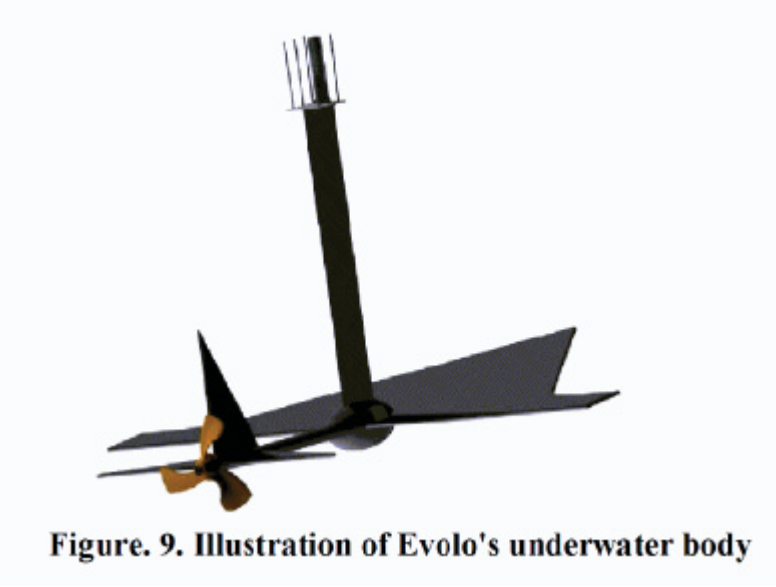

The EvoloReport further discloses that the hydrofoil has no moveable surface. Ex-1003-EvoloReport at 546, 549.

60. EvoloReport discloses that its vehicle was designed to be "controlled by means of a center of gravity shift." Ex-1003-EvoloReport at 29.

61. The limitation "controlled solely by weight shift of the user" in the '044 patent refers to the control of the entire personal watercraft, rather than the control of the hydrofoil separately from the personal watercraft. A POSITA would

have understood that this control means longitudinal and directional control of the watercraft. The '659 patent notes that "both longitudinal and directional control of the board is via weight shift." Ex-1001-US659 at 2:9-11. The purported passive stability of the claimed hydrofoil allows "the watercraft to be controlled by weight shift rather than by mechanical system." Ex-1001-USP659 at 5:65-66.

62. Because EvoloReport does not disclose any other moveable objects that would change the force of gravity on the disclosed watercraft, the weight shift of the user of the disclosed watercraft is the gravity shift disclosed in the EvoloReport. Ex-1003-EvoloReport at 29.

(g) *[1D] a propulsion system for propelling the watercraft in a body of water, wherein the propulsion system is connected to the hydrofoil; and*

63. EvoloReport discloses the use of an electric motor coupled with batteries and a propellor to provide a propulsion system for propelling the watercraft in a body of water. Ex-1003-EvoloReport at 551-552. The propulsion system in the EvoloReport is directly connected to the hydrofoil. Ex-1003-EvoloReport at 549.

(h) *[1E] the watercraft having no movable steering system.*

64. EvoloReport discloses the use of a fixed, unmovable handle for the rider to hold onto the watercraft and apply weight shifting. Ex-1003-EvoloReport, 551. The watercraft disclosed by the EvoloReport has no movable steering system.

2. Claim 2: A watercraft in accordance with claim 1, wherein the propulsion system comprises a battery, an electric motor, a motor speed controller, and a propulsor, the propulsor selected from a propeller, a ducted propellor, or a pump-jet.

65. EvoloReport discloses a watercraft having a propulsion system comprising a battery, an electric motor, a motor speed controller, and a propulsor, the propulsor selected from a propeller, a ducted propeller, or a pump-jet. Ex-1003-EvoloReport, p9 ("…in order to power the chosen ***electric motor***, ***new batteries were purchased for the project***"); *Id.* ("In order to have an advantageous propulsion system for Evolo … a standard propeller [can be] used or a propeller… is manufactured"); Ex-1003-EvoloReport, p. 498 ("The motor is controlled by varying the frequency of the input voltage by varying a control voltage to a control system ... indicates what speed or torque is desired…").

66. The final design in EvoloReport uses the Torqeedo 4.0 R, an asynchronous electric motor, to rotate a propeller to propel the watercraft through

the water. Ex-1003-EvoloReport, p.498 ("an asynchronous motor that is now being investigated in the project, Torqeedo Cruise 2.0.").

67. EvoloReport discloses using the Torqeedo 2.0 R and the Torqeedo 4.0 R at different design stages due to the availability of the 4.0 R motor; however, both Torqeedo motors are asynchronous electric motors. Ex-1003-EvoloReport, p.498 ("Since most of the industrial and marine motors on the market, eg Torqeedo, are asynchronous motors…"). The disclosed watercraft in EvoloReport further includes a electronic motor speed controller (e.g., either an inverter or pulse modeler) that controls the speed of the motor. Ex-1003-EvoloReport, p.498 ("The motor is **controlled by varying the frequency of the input voltage by varying a control voltage to a control system, known as an inverter or pulse modeler**…").

68. The EvoloReport discloses that the electric motor is powered by batteries. Ex-1003-EvoloReport, p.9 ("In order to be able to use the selected electric motor, **new batteries** were purchased for the project."). The electric motor provides rotation to a propeller that drives the watercraft through the water. *Id.* ("The **finished propeller** is shown in Figure 9.").

Figure 9 Propeller manufactured for Evolo

3. Claim 4: A watercraft in accordance with claim 1, wherein the hydrofoil is indirectly connected to the strut.

69. EvoloReport discloses a watercraft having a hydrofoil that is indirectly connected to the strut. The below figure from EvoloReport shows dimensions of the front hydrofoil wing formed by molding a wing shape with a central cutaway for a motor pod.

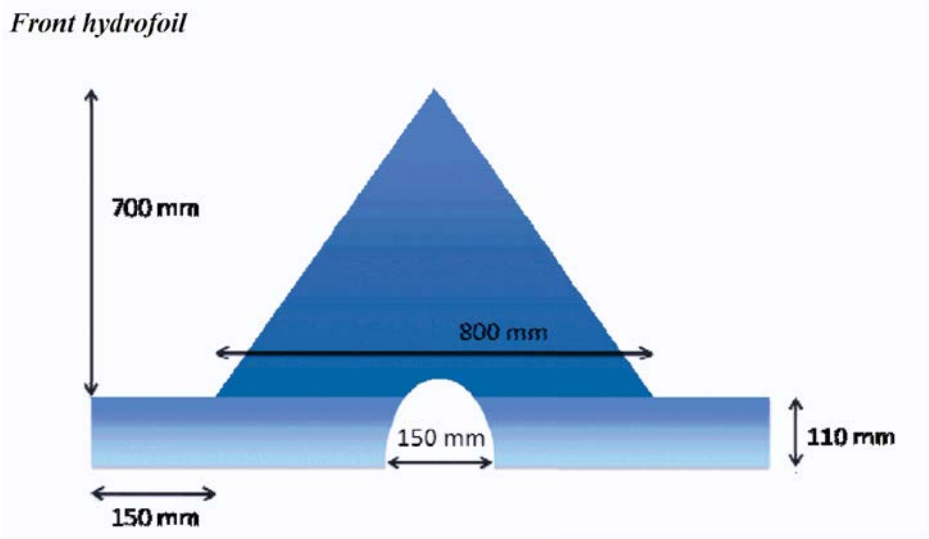

Ex-1003-EvoloReport at 322.

70. The hydrofoil is then inserted around the motor pod and attached to a flange of the motor pod by bolts. Ex-1003-EvoloReport at 271 ("The mounting of the front hydrofoil and the strut with the motor is done by **bolting the hydrofoil against the flange located on the motor pod**.") Figure 1 shows the internal connection between the motor pod, the hydrofoil flange, and the strut. Ex-1003-EvoloReport at 371.

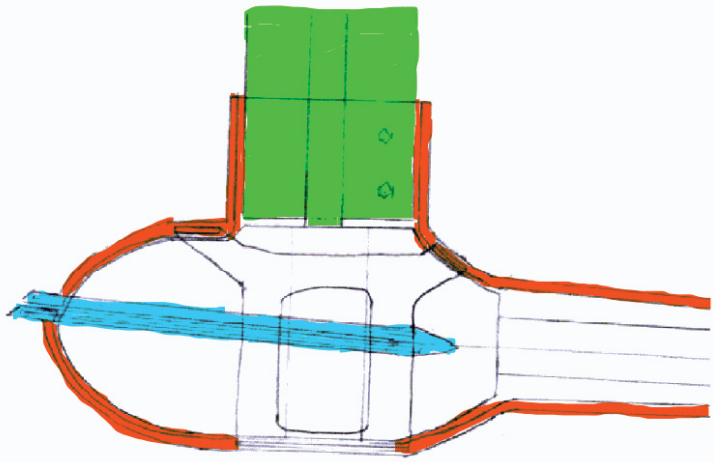

Figure 1. Drawing of "Easter egg solution" in profile. The flange visible in the center should be straight to facilitate manufacturing. The aluminum reinforcement drawn according to the hydrofoil and stay report does not need to be used.

As shown above, the top and bottom motor pods are molded around the motor to secure the attached hydrofoil in place. Ex-1003-EvoloReport at 256-267 ("These parts are then enclosed around the motor so that the hydrofoil is prevented from shifting in all degrees of freedom.").

71. The top section of the motor pod includes a hole to allow the motor pod to be secured to the strut. Ex-1003-EvoloReport at 295 ("Mounting number 3,

between the strut and the motor bulb, is the most complicated of the 4. It involves attaching the strut to an egg-like engine compartment shell which in turn is assembled with the front delta wing, *see Figure 4*").

72. EvoloReport shows the results from a test to manufacture the top section of the motor pod, in which the flange is visible protruding around the bottom edge of the motor pod and having drill holes for attaching the hydrofoil.

Figure 3. Results of test lamination.

Ex-1003-EvoloReport at 370-373 ("A submarine shaped plug with approximate dimensions as it will be on the real hydrofoil mount was hand laid with carbon fiber and matrix. Image of the construction after lamination is shown in Figure 3.")

73. As the hydrofoil is only attached to the flange of the motor pod, the hydrofoil is indirectly connected to the strut by way of the flange on the motor pod.

4. Claim 5: A watercraft in accordance with claim 4, wherein the strut is directly connected to the propulsion system.

74. EvoloReport discloses a watercraft wherein the strut is directly connected to the propulsion system. EvoloReport discloses that the watercraft's propulsion system, specifically the steel rod that extends from the motor to the motor controls and shown below in Figure 2, forms the core of the strut that links the floatation device to the motor and hydrofoil. Ex-1003-EvoloReport at 14 ("The metal bar **is part of the original engine structure** and is retained as it provides a guaranteed watertight link down to the engine bulb."); *Id.* at 276 ("As **the motor cannot be detached from the shaft**, the profile and any other parts must be put on the shaft from above."); *Id.* ("In this figure, **the motor represents the square plate**.")(referring to Figure 2, below).

Figure 2. Steel shaft from motor.

Ex-1003-EvoloReport at 276.

75. EvoloReport teaches that the steel rod provided from the Torqeedo motor does not provide the required strength and rigidity to handle the loads

transmitted by the hydrofoil. Ex-1003-EvoloReport at 276 ("**the existing shaft is not enough to give the desired strength and rigidity**.") To provide additional strength, a wing shaped structure is added around the existing shaft to form the strut.

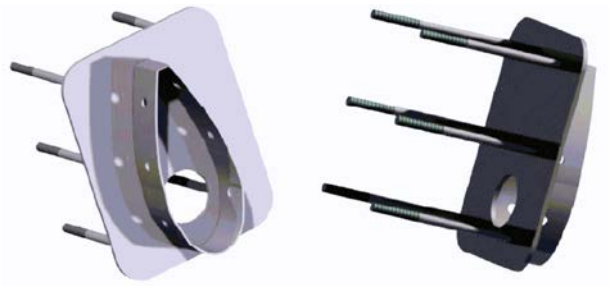

Figure 3. Base plate for joining the strut and floating body.

Id. ("To solve this problem, **the profile is used as a load-bearing structure together with the steel shaft**."). The strut, formed by the wing shaped profile and the steel shaft, is connected to the floatation device by a base plate. Ex-1003-EvoloReport at 277 ("The function of the base plate is to **transmit the forces and torques absorbed by both the shaft and the profile to the floating body**.")

76. The connection between the wing shaped profile, the steel rod from the motor, and the motor pod is shown below. Ex-1003-EvoloReport at 371.

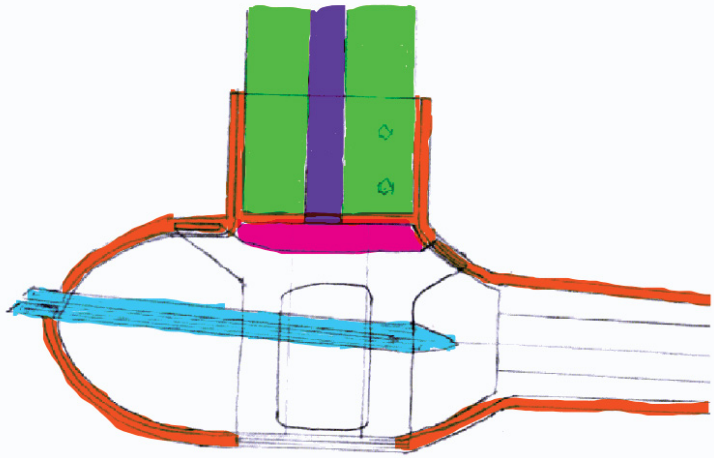

Figure 1. Drawing of "Easter egg solution" in profile. The flange visible in the center should be straight to facilitate manufacturing. The aluminum reinforcement drawn according to the hydrofoil and stay report does not need to be used.

Therefore, EvoloReport discloses a watercraft having a strut that is directly connected to the propulsion system (electric motor) by way of the steel rod extending from the motor.

5. Claim 7: A watercraft in accordance with Claim 4, wherein the hydrofoil comprises a plurality of wings that are interconnected by way of a strut.

77. EvoloReport discloses a watercraft having a hydrofoil comprising a plurality of wings that are interconnected by way of a strut. Specifically, EvoloReport discloses a watercraft having a front hydrofoil and a rear ("aft") hydrofoil that are connected by way of a carbon fiber strut (e.g., the stay). Ex-1003-

EvoloReport at 7 ("As can be seen in Figure 6 below, it was chosen to integrate the motor in **the front hydrofoil** and that the propeller is placed **behind the aft hydrofoil**. The propeller shaft runs from the motor to the propeller **inside a carbon fiber stay**.").

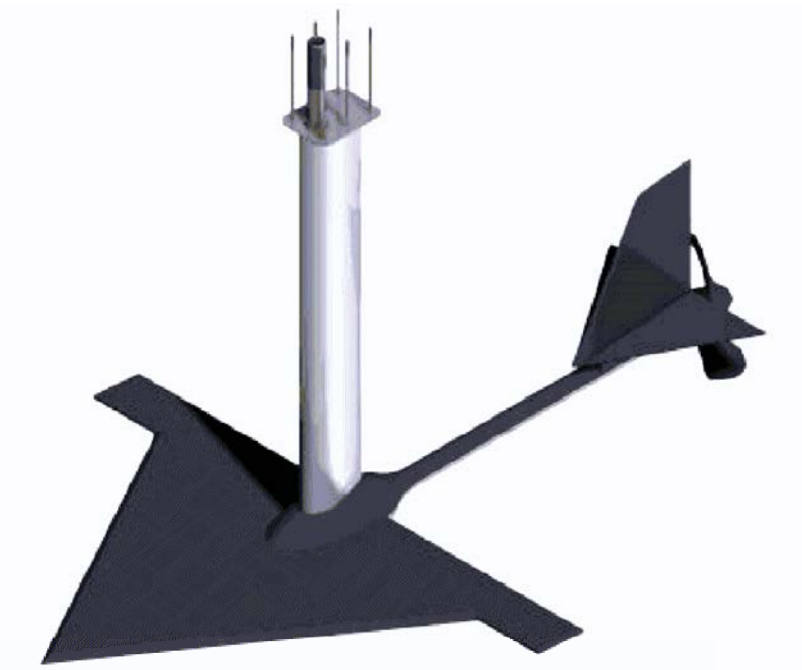

Figure 6 Illustration of Evolo's underwater body

As the front hydrofoil and the rear hydrofoil are connected via the motor pod and the rear strut, the front hydrofoil is interconnected to the rear hydrofoil by way of a strut.

78. Furthermore, Woolley discloses a hydrofoil comprised of two wings – its front blade and rear blade – interconnected by way of a strut.

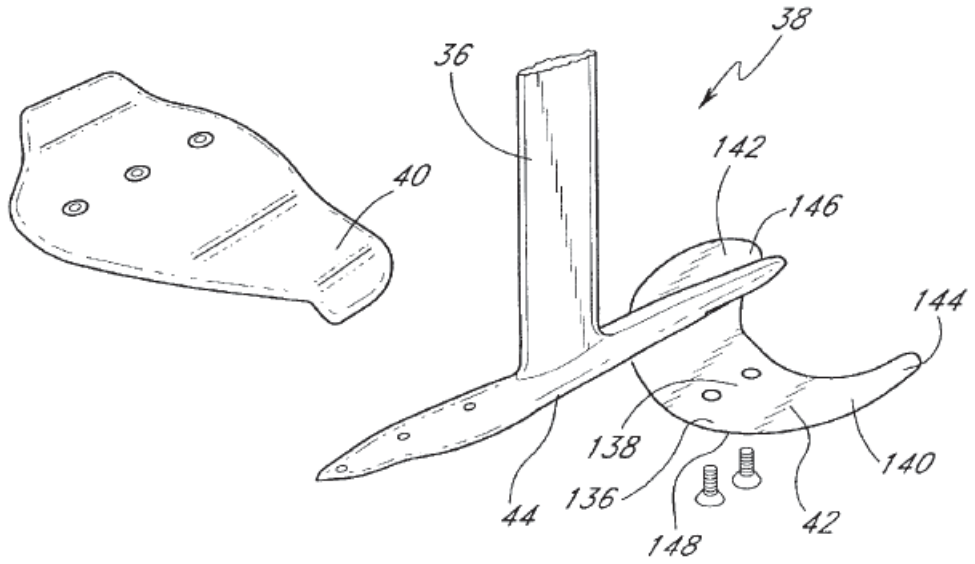

FIG. 7A

Ex-1011-Woolley at Fig 7A. Forward blade 40 and aft blade are interconnected via strut 44. Ex-1011-Woolley at 10:38-40 ("The planing blade or blade assembly 38 advantageously has a front blade 40 and a rear blade 42 interconnected by a fuselage 44.").

79. Accordingly, POSITA would have found claim 7 rendered obvious by EvoloReport in light of Woolley.

6. Claim 8: A watercraft in accordance with claim 2, wherein the battery and motor speed controller are contained in a water-tight compartment integrated into the flotation device.

80. EvoloReport discloses a watercraft having a watertight compartment integrated into the flotation device. The watertight compartment of EvoloReport is shown by the grey plates in the below Figures 11 and 12. Ex-1003-EvoloReport at 550; 327 ("this throttle should be placed **inside the waterproof battery container** that encloses the top of the mounting of the strut…. This is the critical point of the cable routing due to the fact that **the battery container must be waterproof**.")

These watertight compartments house the batteries. Ex-1003-EvoloReport at 550 ("The floating body has sufficient volume to be able to stay afloat with the driver. **It should also have room for batteries**.").

81. EvoloReport further discloses including additional electronics (i.e., the throttle, lanterns, and a display screen) in the watertight battery compartment. Ex-1003-EvoloReport at 327 ("this throttle should be placed **inside the waterproof battery container** that encloses the top of the mounting of the strut."); Ex-1003-EvoloReport at 524 ("A slightly larger volume is also required for other reasons **such as containing batteries and electronics**. The vision is that **this volume should also be able to contain a waterproof storage compartment, a clear LCD screen with information about speed, battery level, depth, position, etc., and lanterns**.").

82. Although EvoloReport discusses incorporating both the throttle and batteries into the watertight compartment, EvoloReport specifically chooses to use a Torqeedo motor largely because the Torqeedo was already available and was provided with all the required components in a preassembled package. Ex1003-EvoloReport at 180 ("The motor available today is a Torqeedo Cruise 2.0R….The **advantages of this system are that it is a complete driveline**. **Control systems are available and can be modified to work on Evolo**."); Ex1003-EvoloReport at 490 ("There are several options on the market today in terms of **ready-made electric motor concepts** for marine use. The method would be to source a product… then **remove the excess parts to build the motor and electrical system into the Evolo's design**.")

83. EvoloReport does not specifically disclose whether the motor speed controller is contained within the watertight motor pod or within the watertight battery container as EvoloReport drafters purposely chose the already completed Torqeedo motor unit. Ex1003-EvoloReport at 8 ("[The throttle] is designed like a bicycle brake, see Appendices 20 and 44, and **its wiring is passed through the strut down to the motor and its control unit**."); *Id* at 181 ("When it comes to controlling the motors, there is no major difference as **Torqeedo's options include complete systems** and VIAB's **only need some form of potentiometer to regulate the current**."); *Id* at 498 ("Since **most industrial and marine motors on the market, eg Torqeedo, are asynchrounous motors** there is a need to summarize their function and control… Since the motor control of asynchronous motors is of a control technology type and that the skills required to manufacture an own system are not available in the project today, **it is strongly recommended to purchase an already completed system**, adapted to the motor that is finally chosen for Evolo…. **Due to the complexity of motor control of asynchronous motors, it is strongly recommended to use the motor manufacturer's own control system**.")

84. EvoloReport discloses obtaining alternative engine systems and that a control unit would need to be obtained and connected with the chosen motor. Ex1003-EvoloReport at 189 ("The purpose of this study is to make a benchmarking

of what opportunities there are to develop your own motor solution instead of modifying an existing one and what consequences and opportunities it gives the project…. **Another challenge is that such an motor requires control. This is not built yourself**.”); *Id*. at 193 (“The company could also sell a control unit for about 350 dollars plus shipping…. **The advantage of these motors is that they are completely ready and ‘only’ to integrate and connect with a control unit**.”).

85. EvoloReport also discusses integrating a control unit (i.e., a potentiometer) near the handle mounted throttle control. Ex1003-EvoloReport at 184 (“This has a great advantage in view of the fact that **the potentiometer, or control unit for the motor, can be placed separately from the handle** and that the handle can then be moved more easily…. The cable to the potentiometer can be selected as a regular bicycle brake cable. **If the motor is a torqeedo, the wiring to the motor bulb**, which is an ordinary telephone cable with connectors at the ends, can be easily spliced and extended, which **provides easy movement and separation of handles, control unit and motor**.”) *Id.* at 185-186 (“The components are easy to procure or manufacture and **allow a wide variety of final placement**. However, **the control itself should not be made too far** as it will then be pulled obliquely if you do not apply the throttle in the middle of the control.”).

86. EvoloReport states that the throttle control for the Torqeedo motor, should logically be located in the watertight battery container to ensure that the throttle control will always be dry. Ex-1003-EvoloReport at 327 ("Preliminarily, this **throttle control should be placed inside the waterproof battery container** that encloses the top of the mounting of the strut. This means that **the throttle control will always be dry and is currently the logical choice**…. This is the critical point of the cable routing due to the fact **that the battery container must be waterproof** and the cable must be pulled in such a way that they do not destroy it."). EvoloReport thus teaches that it is important to keep sensitive electronics, such as the batteries and throttle controls, dry to prevent water damage.

87. Accordingly, a POSITA would have been motivated, based on EvoloReport's own teachings, to incorporate the motor speed controller into the watertight compartment of the flotation device if a preassembled waterproof engine were not used.

7. Claim 9: A watercraft in accordance with claim 2, wherein the electric motor is integrated into a waterproof, streamlined pod and the watercraft comprises a cooling system for cooling the electric motor.

88. EvoloReport discloses a watercraft having an electric motor integrated in a waterproof, streamlined pod. Ex-1003-EvoloReport Fig. 2 at.492 (below).

In EvoloReport, the structure of the Torqeedo motor is altered such that only the waterproof pod housing and vertical steel rod that houses the cables are retained from the stock image of the Torqeedo motor shown above. Ex-1003-EvoloReport at 490 ("There are several options on the market today in terms of **ready-made electric motor concepts for marine use**. The method would be to source a product… then **remove the excess parts to build the motor and electrical system into the Evolo's design**."). EvoloReport retains the waterproof, streamlined pod of the Torqeedo motor and removes the lower fin, propeller, and upper controls to allow the motor to be integrated into the motor pod mountings.

89. Additionally, the disclosed Torqeedo 4.0 R includes a cooling system. Ex-1003-EvoloReport at 257 ("…holes in the mold must be left around the center of the motor because **the cooling to the motor is there**.…aluminum plates must be cast into the mold around **the motor's cooling part**.") EvoloReport further discloses

constructing a streamlined, watertight housing having a cooling system for the motor in the event a completed marine motor was unavailable. Ex-1003-EvoloReport at 515 ("If an option not initially adapted to drive a propeller in water is chosen, **the motor must be built into some kind of watertight housing**. Construction of such must be verified, **both in terms of strength and resistance contribution to the craft** but **also in terms of function such as cooling** and that it holds tight."). EvoloReport therefore discloses a watercraft having an electric motor that is integrated into a waterproof, streamlined pod and the watercraft comprises a cooling system for cooling the electric motor.

8. Claim 10: A watercraft in accordance with claim 9, wherein the waterproof, streamlined pod is removably interconnected with the hydrofoil through a fitting.

90. EvoloReport discloses a watercraft having an electric motor that is removably interconnected to the hydrofoil through a fitting. Ex-1003-EvoloReport at 256-257 ("…the **hydrofoil must be fixed to the motor without the use of glue or screws**. To solve this the easiest way, we recommend molding the entire underwater body into two parts. These parts are then **enclosed around the motor so that the hydrofoil is prevented from shifting in all degrees of freedom**…In addition, the shape should be **fixed by screws to the fin that usually sits under the bulb**."). The hydrofoil taught in EvoloReport is formed with a center cut out

allowing the hydrofoil to be mounted on the flange of the motor pod, which sections are then sized to fit around the electric motor. Ex-1003-EvoloReport at 271 ("The mounting of the front hydrofoil and the strut with the motor is done by **bolting the hydrofoil against the flange located on the motor pod**.") Thus, the hydrofoil is designed to be removably attached with bolts to the motor pod which is designed to wrap around the electric motor. *Id.* Accordingly, EvoloReport discloses an electric motor within a waterproof, streamlined pod that is removably interconnected with the hydrofoil through a fitting.

9. Claim 11: A watercraft in accordance with claim 8, further comprising a wireless handheld controller having a transmitter, and a throttle interface having a receiver, wherein the transmitter is adapted to send wireless signals to the receiver that cause an output of the propulsion system to change.

91. EvoloReport discloses or renders obvious a watercraft comprising a wireless handheld controller having a transmitter, and a throttle interface having a receiver, wherein the transmitter is adapted to send wireless signals to the receiver that cause an output of the propulsion system (motor) to change. Ex-1003-EvoloReport p.524 ("The handles have controls for the engine and dead man's switch. For even greater freedom, you should be able to remove the stays for the

handles completely and disconnect the handles, **which can then regulate the motor wirelessly**.”)

92. Although wireless control of the motor was not implemented in the final design of Evolo-Report, it was clearly contemplated in the early design stages of the project. Therefore, it was obvious to the authors of EvoloReport, who contain less skill than a POSITA, where motivated to incorporate a wirelessly controlled motor. A POSITA would have had the knowledge and experience to incorporate a wirelessly controlled motor via a handheld transmitter and throttle interface receiver as this is the primary way to incorporate a wireless control device to operate an electric motor. Therefore, a POSITA would have been motivated to modify the watercraft of EvoloReport to incorporate the wireless motor control that is discussed in EvoloReport’s conceptual design to yield predictable results (a wirelessly controlled watercraft). A POSITA would have a reasonable expectation of success given that remote control technology was well known at the time and incorporating a hand held remote control is well within the skill of a POSITA.

10. Claim 13: A watercraft in accordance with claim 8, wherein the strut has an internal passage and electrical wires extend from the electric motor to the waterproof compartment inside the strut through the internal passage for controlling the electric motor.

93. EvoloReport discloses that the strut contains an internal passage to allow electrical wires to extend from the electric motor to the waterproof compartment through the internal passage. Ex-1003-EvoloReport at 14 ("The metal bar **is part of the original engine structure** and is retained as it provides a guaranteed watertight link down to the engine bulb.") The strut includes the hollow rod that links the electric motor to the battery compartment. Ex-1003-EvoloReport at 276.

94. The strut is then connected to the flotation device by bolting a base plate to the flotation device. Ex-1003-EvoloReport at 275 ("The existing motor construction consists of the motor unit which is linked to the steering by means of a 750 mm long steel shaft with an outer diameter of 35 mm, **through which shaft control cables and power cables run**."); *Id.* at 276 ("**Note the hole for the cables at the aft towards the battery boxes** [3], as well as the threaded upper part of the shaft….The function of the base plate is to transmit the forces and torques absorbed by both the shaft and the profile to the floating body.")

95. As shown below, the rod contains a passage to allow for cables to be routed from the motor to the battery and controls to provide power and control signals to the motor.

Figure 2. Steel shaft from motor.

Ex-1003-EvoloReport at 276. EvoloReport therefore discloses a watercraft having a strut with an internal passage and electrical wires extending from the electric motor to the waterproof compartment inside the strut through the internal compartment for controlling the electric motor.

11. Claims 15: A watercraft in accordance with claim 1, wherein the propulsion system is directly or indirectly connected to the hydrofoil.

96. To the extent this claim provides limitations in excess of Claim 1, EvoloReport discloses a hydrofoil that is directly or indirectly connected to the propulsion system. EvoloReport discloses a watercraft having a propulsion system (an electric motor) and a hydrofoil in which the hydrofoil is directly or indirectly connected to the propulsion system by a flange located on the motor pod. Ex-1003-EvoloReport at 271 ("The mounting of the front hydrofoil and the strut with the

motor is done by **bolting the hydrofoil against the flange located on the motor pod**."); *Id*. at 370 ("The proposal is to partly **build the "sleeve" around the motor** so that it goes up a few centimeters around the strut, and partly just **have a horseshoe-shaped, aluminum-reinforced flange around the sides and in front of the motor** into which you can **fasten a loose hydrofoil** in the same way as on the experimental craft."). Thus, EvoloReport discloses a watercraft having a propulsion system (the electric motor) and hydrofoil that are indirectly or directly connected.

B. Ground 2

97. EvoloVideos in combination with Woolley renders claims 1, 4-5, 7, and 15 obvious under 35 USC §103.

1. Claim 1

(a) *[1Preamble] A passively stable, weight-shift controlled personal hydrofoil watercraft, comprising:*

98. EvoloVideos refers to the collection of three separate videos, Ex-1006-EvoloVideos-ProtoypeRun, Ex-1008-EvoloVideos-EvoloMovie, and Ex-1010 EvoloVideos-Torqeedo. A POSITA would have been motivated to combine the disclosures of these three videos because the videos are related to the disclosure of the same information – the development of the Evolo Project.

99. To the extent that the preamble of Claim 1 is limiting, EvoloVideos discloses a weight-shift controlled personal hydrofoil watercraft.

Ex-1006-EvoloVideos-PrototypeRun at 1:21. EvoloVideos disclose a single person on a watercraft utilizing weight-shift to control the watercraft. Ex-1006-EvoloVideos-PrototypeRun at 1:21. To the extent that EvoloVideos do not sufficiently disclose a watercraft that is passively stable, it would have been obvious to a POSITA to modify the watercraft disclosed in EvoloVideos to make it passively stable.

100. A POSITA would have been motivated to combine the watercraft disclosed in the EvoloVideos with the teachings of Woolley to provide for a passively stable hydrofoil. As disclosed in ¶¶40-47, Woolley discloses a hydrofoil fixedly interconnected with the lower end of a strut, the hydrofoil having no

moveable surface and designed to provide passive static stability controlled solely by weight shift of the user. A POSITA would have the same motivation to combine the hydrofoil disclosed and described in Woolley with EvoloVideos as with the EvoloReport in that all are directed to personal hydrofoil watercraft.

(b) *[1A1] a floatation device that has a fore-aft length greater than a lateral width, the floatation device having a top surface and a bottom surface,;*

101. EvoloVideos discloses a floatation device that has a fore-aft length greater than a lateral width, with the floatation device having a top surface and a bottom surface. EvoloVideos disclose a floatation device having a fore-aft length greater than the lateral width.

Ex-1006-EvoloVideos-PrototypeRun at 0:27–0:30. EvoloVideos discloses that the floatation device has a top surface and a bottom surface.

Ex-1006-EvoloVideos-PrototypeRun at 0:09.

(c) *[1A2] wherein a user can be disposed on the top surface of the flotation device in a prone, kneeling, or standing position,;*

102. EvoloVideos discloses a watercraft where a user can be disposed in a kneeling position on the top of the surface of the flotation device.

Ex-1006-EvoloVideos-PrototypeRun at 1:21.

(d) *[1A3] the floatation device having a forward section, a middle section, and a rear section;*

103. The claim terms "a forward section, a middle section and a rear section" are referenced in the '044 patent as labels of the fore, middle, and aft sections of the floatation device. Ex-1001-USP044, 3:27-31; Fig. 1. To the extent that the floatation device claimed in the '044 Patent "may be said to have" a forward section, middle section, and a rear section, EvoloVideos discloses a floatation device with a hull form that shows such types of sections along its length. Ex-1006-EvoloVideos-PrototypeRun at 0:09.

(e) *[1B] a strut having an upper end and a lower end, the upper end fixedly interconnected with the flotation device between the middle section and the rear section of the flotation device.*

104. EvoloVideos discloses the use of a strut having an upper end and a lower end with the upper end fixedly interconnected with the flotation device between the middle section and the rear section of the flotation device.

Ex-1006-EvoloVideos-PrototypeRun at 0:09.

(f) *[1C] a hydrofoil fixedly interconnected with the lower end of the strut, the hydrofoil having no moveable surface*

105. EvoloVideos discloses a hydrofoil fixedly interconnected with the lower end of the strut. Ex-1006-EvoloVideos-PrototypeRun at 0:09.

106. EvoloVideos further discloses that the hydrofoil has no moveable surface. Ex-1006-EvoloVideos-PrototypeRun at 0:09. In EvoloVideos, the user of the watercraft is shown to control the watercraft solely by the weight shift of the user. Ex-1006-EvoloVideos-PrototypeRun at 0:50-1:00.

Ex-1006-EvoloVideos-PrototypeRun at 1:53.

(g) *[1D] a propulsion system for propelling the watercraft in a body of water, wherein the propulsion system is connected to the hydrofoil; and*

107. EvoloVideos disclose a propulsion system for propelling the watercraft in a body of water, wherein the propulsion system is connected to the hydrofoil.

Ex-1006-EvoloVideos-PrototypeRun at 0:09.

(h) *[1E] the watercraft having no movable steering system.*

108. The watercraft disclosed by the EvoloVideos has no movable steering system.

109. As such a POSITA would have been motivated to combine the teachings of EvoloVideos with Woolley to obtain a passively statically stable watercraft as disclosed in claim 1. Both EvoloVideos and Woolley are directed to recreational hydrofoil watercraft. Further, to the extend that the watercraft disclosed in EvoloVideos lacks passive stability, Woolley discloses methods and solutions for providing additional passive stability.

2. Claim 4: A watercraft in accordance with claim 1, wherein the hydrofoil is indirectly connected to the strut.

110. EvoloVideos shows a watercraft having a hydrofoil that is indirectly connected to the strut. Ex-1008-EvoloVideos-EvoloMovie, 1:42.

The red circle above depicts the mounting point between the hydrofoil and the motor pod housing, which is further shown in a partially disassembled state, below.

Ex-1010-EvoloVideos-Torqeedo, 0:23.

The motor pod is then reassembled with the top and bottom sections encasing the motor. Ex-1010-EvoloVideos-Torqeedo, 0:25.

The hydrofoil is then bolted onto the flange that extends around the motor pod to secure the two halves of the motor pod and the hydrofoil. Ex-1010-EvoloVideos-Torqeedo, 0:28.

The top half of the motor pod is integrally formed with the strut as shown. Ex-1010-EvoloVideos-Torqeedo, 0:27.

111. As the hydrofoil is directly connected (bolted) to the flange of the motor pod and not the strut, the hydrofoil is indirectly connected to the strut via the motor pod.

3. Claim 5: A watercraft in accordance with claim 4, wherein the strut is directly connected to the propulsion system.

112. EvoloVideos depict a watercraft wherein the strut is directly connected to the propulsion system. EvoloVideos-Torqeedo depicts installation of a Torqeedo motor by routing the top rod of the motor through the strut such that the rod of the motor becomes a part of the strut. Ex-1010-EvoloVideos-Torqeedo, 0:00-0:01.

As shown, the rod connecting the motor to the motor controls and battery is being inserted into the strut to allow the motor pod to be closed around the motor. EvoloVideos-Evolo-Torqeedo. As shown above, with respect to Claim 7, the

motor is encapsulated by the top and bottom sections of the motor pod. *See* ¶¶109-110. The assembled motor pod is displayed below and shows the top section of the motor pod (inverted) integrally formed with the strut. Ex-1010-EvoloVideos-Torqeedo.

As the metal rod that is connected to the engine extends through the hollow strut, EvoloVideos-Torqeedo discloses a watercraft in which the propulsion system (electric motor) is directly connected to the strut.

4. Claim 7: A watercraft in accordance with Claim 4, wherein the hydrofoil comprises a plurality of wings that are interconnected by way of a strut.

113. As discussed previously in ¶¶78-80, Woolley discloses a hydrofoil comprised of two wings – its front blade and rear blade – interconnected by way of

a strut. Furthermore, EvoloVideos shows a watercraft having a hydrofoil comprised of a plurality of wings connected by a strut. Ex-1008-EvoloVideos-EvoloMovie, 1:39.

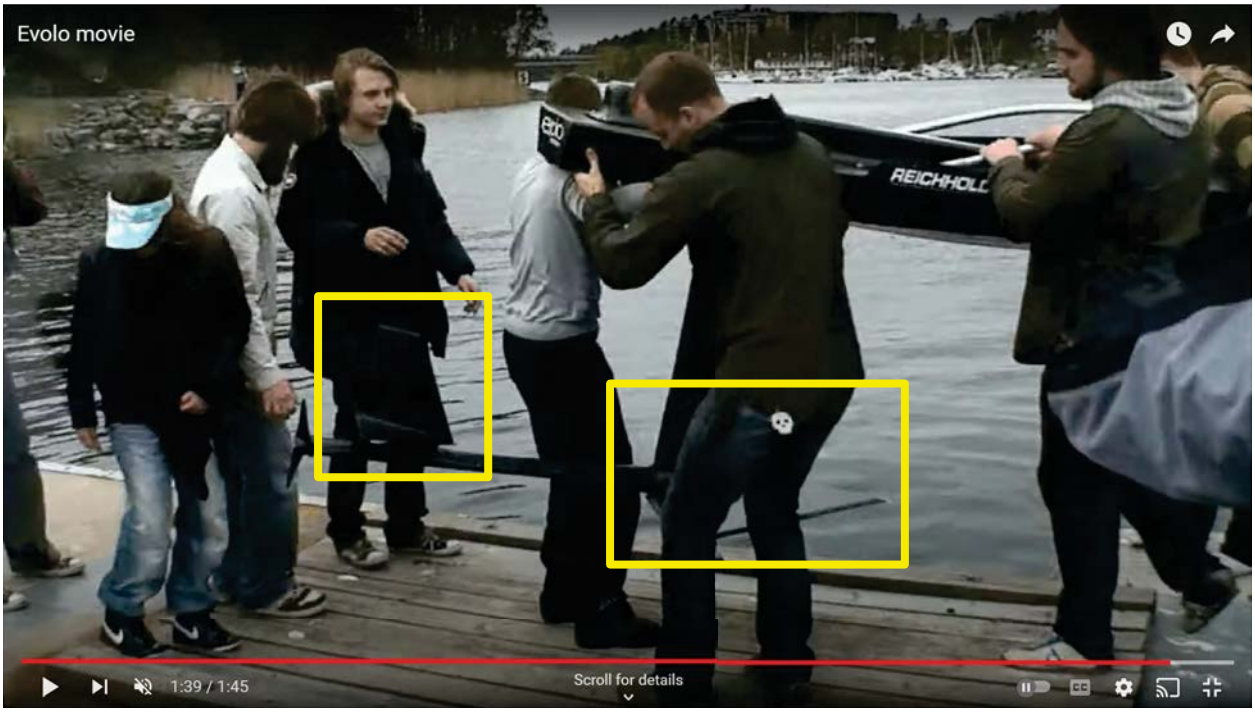

114. As shown above, EvoloVideos displays a watercraft having a hydrofoil composed of a front and a rear wing. The rear wing is mounted on a strut that leads to the motor pod, which is connected to the hydrofoil. Therefore, the rear wing is connected to the front wing of the hydrofoil by a strut. Accordingly, the combination of the watercraft disclosed by EvoloVideos and Woolley discloses this element.

5. Claim 21: A watercraft in accordance with claim 1, wherein the propulsion system is directly or indirectly connected to the hydrofoil.

115. To the extent that Claim 21 is limiting in excess of Claim 1, EvoloVideos-Prototype-Run discloses a propulsion system directly or indirectly connected to the hydrofoil.

C. Ground 3

116. EvoloVideos in combination with Woolley and TorqueedoManual renders claims 2, 9 and 10 obvious under 35 USC §103.

1. Claim 2: A watercraft in accordance with claim 1, wherein the propulsion system comprises a battery, an electric motor, a motor speed controller, and a propulsor, the propulsor selected from a propeller, a ducted propellor, or a pump-jet.

117. EvoloVideos disclose an electric powered watercraft. Ex-1008-EvoloVideos-EvoloMovie, 0:11.

EvoloVideos disclose an electric watercraft having a battery compartment and a propeller. Ex-1006-EvoloVideos-PrototypeRun, 0:09.

As shown in EvoloVideos, the disclosed watercraft contains a raised compartment to store the batteries. Ex-1006-EvoloVideos-PrototypeRun. The electric motor is housed in the motor pod at the bottom of the strut and powers the propeller located at the rear of the lower section. Ex-1006-EvoloVideos-PrototypeRun.

118. Evolo-Torqeedo shows the installation of the Torqeedo 4.0 R electric motor into the motor pod of the watercraft. Ex-1010-EvoloVideos-Torqeedo, 0:23 (showing the installation of the motor into the motor pod).

EvoloVideos-Torqeedo further depicts the Torqeedo motor causing rotation of a propeller. Ex-1010-EvoloVideos-Torqeedo, 0:40-0:50.

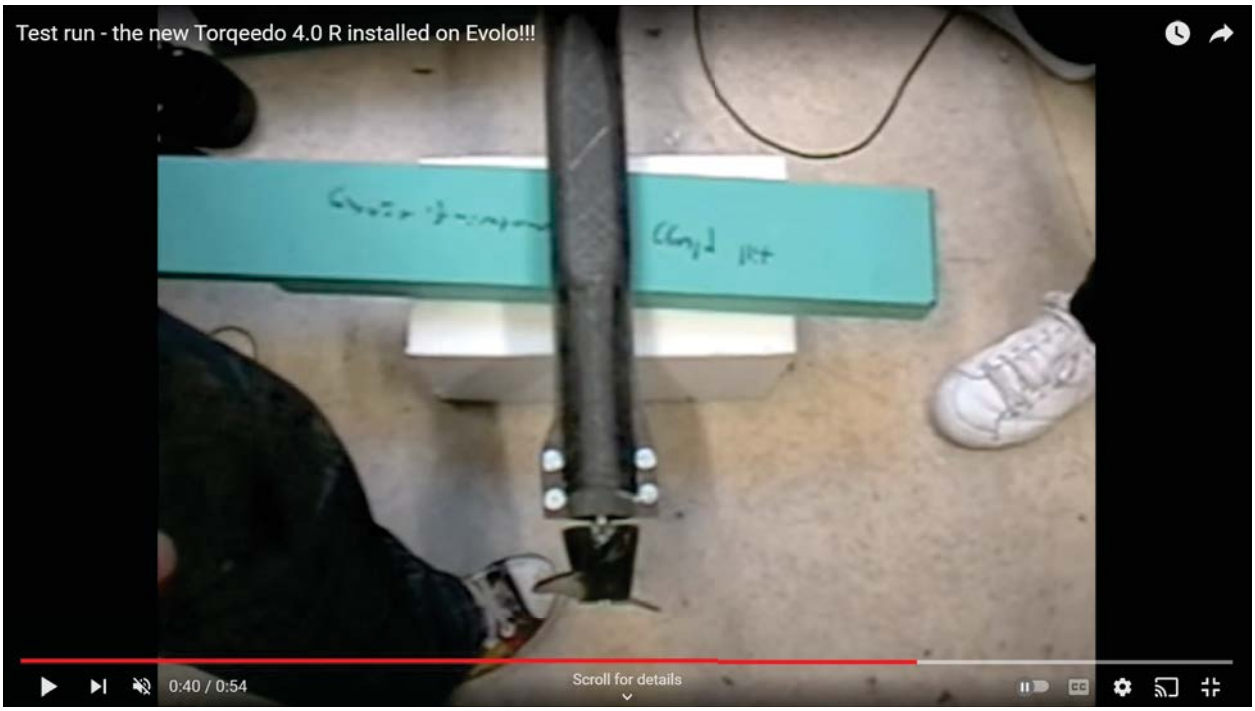

119. Torqeedo-Manual describes that the motor and the motor speed controller (electronic control system) of Torqeedo motors are located in the lower pylon. Ex-1014-Torqeedo-Manual at 23 ("The motor and the electronic control system are located in the pylon."). Further, Torqeedo-Manual states that Torqeedo Cruise model motors can be operated by battery power. Ex-1014-Torqeedo-Manual at 13 ("The Cruise models can be operated with lead-acid, lead-gel, AGM or lithium-based batteries.").

120. A POSITA would have been motivated to combine the teachings of the Torqeedo-Manual with the EvoloVideos for the following reasons.

121. Each of these references relate to electric powered water vehicles. Ex-1014-Torqeedo-Manual at 7 ("We, Torqeedo GmbH, with sole responsibility, declare the conformity of the Cruise 2.0 product range with the following provisions: Small water vehicles"). Further, the watercraft shown in the EvoloVideos uses a Torqeedo brand motor. Ex-1010-EvoloVideos-Torqeedo. Therefore, a POSITA would have been motivated to review Torqeedo-Manual and incorporate the teachings into the watercraft disclosed in EvoloVideos.

122. EvoloVideos-Torqeedo depicts the installation of a Torqeedo motor into the disclosed watercraft. Ex-1010-EvoloVideos-Torqeedo.

123. As such, a POSITA would have understood that the watercraft disclosed in the EvoloVideos all show a watercraft containing batteries, an electric motor, a motor speed controller (electronic control system), and a propeller.

2. Claim 9: A watercraft in accordance with claim 2, wherein the electric motor is integrated into a waterproof, streamlined pod and the watercraft comprises a cooling system for cooling an electric motor.

124. EvoloVideos-Torqeedo and TorqeedoManual disclose that the electric motor is integrated into a waterproof, streamlined pod, and the watercraft comprises a cooling system. Ex-1010-EvoloVideos-Torqeedo 0:01, Ex-1014-Torqeedo-Manual.

As shown above, EvoloVideos-Torqeedo depicts installation of the Torqeedo motor into a streamlined pod of the watercraft. *See generally* Ex-1010-EvoloVideos-Torqeedo.

125. Torqeedo-Manual describes that Torqeedo motors contain temperature protection measures that will reduce the motor speed to allow the motor to cool off (a cooling system). Ex-1014-Torqeedo-Manual ("If the motor overheats, **the motor control system reduces the output of the drive until a temperature equilibrium is established between generated and disposed heat**.")

126. Further, the Torqeedo 4.0 that is being installed is a marine motor that is intended to be used underwater and is therefore waterproof. Ex-1014-Torqeedo-Manual.

127. Accordingly, EvoloVideos and Torqeedo-Manual disclose where the electric motor is integrated into a waterproof, streamlined pod and the watercraft comprises a cooling system.

3. Claim 10: A watercraft in accordance with claim 9, wherein the waterproof, streamlined pod is removably interconnected with the hydrofoil through a fitting.

128. EvoloVideos discloses a watercraft having an electric motor that is removably interconnected with the hydrofoil through a fitting. Ex-1010-EvoloVideos-Torqeedo, 0:01-0:28 (depicting installing an electric motor into a housing and mounting a hydrofoil to the housing).

As shown above, the electric Torqeedo 4.0 R motor is installed by inserting the shaft extending upwards from the motor into the upper motor pod portion. Ex-1010-EvoloVideos-Torqeedo.

129. Next, the bottom motor pod portion is secured to the upper motor portion. Ex-1010-EvoloVideos-Torqeedo, 0:23-0:25.

130. The hydrofoil is bolted to the motor pod to secure the hydrofoil to the sections of the motor pod. Ex-1010-EvoloVideos-Torqeedo, 0:28.

The hydrofoil has a cutaway portion to allow the hydrofoil to wrap around the motor pod and attach to the flange on the front and both sides of the flange.

131. Accordingly, EvoloVideos-Torqeedo depicts a watercraft in which the electric motor is removably interconnected through bolt connections to the hydrofoil by a fitting (fitted connection between the flange of the motor pod and the hydrofoil).

D. Ground 4

132. Claim 8 is rendered obvious under 35 U.S.C. §103 by the combination of EvoloVideos, Woolley, TorqeedoManual, and Gleason.

1. Claim 8: A watercraft in accordance with claim 2, wherein the battery and motor speed controller are contained in a water-tight compartment integrated into the flotation device.

133. Gleason discloses a motorized surfboard having an electric motor that is powered by batteries located in a compartment of the board. Ex-1012-Gleason, 2:16-21 ("An electric **storage battery 20 is positioned within the storage compartment** and is **operatively connected with the motor 16 by means of electrical conductors 22**), 2:39-46 ("Although not shown **it will be understood that speed control means can be incorporated with control means 24**…. In the event that an electric motor is employed **any of the usual speed regulators can be provided**.") As shown below in Gleason Fig. 1, the battery 20 is located in a container within the flotation device (the surfboard deck 30) and connected to the motor with electrical conductors 22.

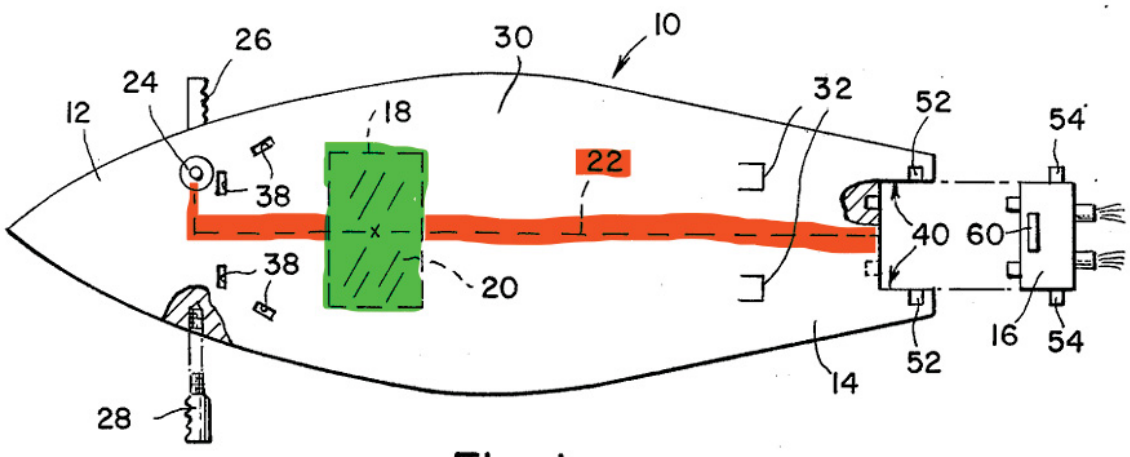

Fig. 1

Ex-1012-Gleason at Fig1.

134. Further, Gleason describes providing a motor speed controller (speed control means) for the electric motor along with the other controls to operate the electric motor. These are positioned along the electrical conductors, which pass through the battery container to connect the battery to the motor. Ex-1012-Gleason at Fig1.

135. As shown below in the yellow highlighted section, EvoloVideo-PrototypeRun depicts a flotation device having a container for batteries within the flotation device. Ex-1006-EvoloVideos-PrototypeRun, 0:09.

136. A POSITA would have been motivated to combine the teachings of Gleason and EvoloVideos-PrototypeRun to create a watercraft having a motor speed controller and battery in a watertight container within the flotation device for several reasons.

137. First, EvoloVideos-PrototypeRun and Gleason are both related to electric powered watercraft intended for recreational use. Second, EvoloVideos-PrototypeRun and Gleason both use a battery storage compartment within the flotation device of the watercraft that house a battery to power the electric motor. Ex-1012-Gleason, 2:16-21 ("An electric storage battery 20 is positioned within the

storage compartment and is operatively connected with motor 16….”). It is known that water damages electronics and therefore any electronics should be shielded from contact with water. *See e.g.* Ex1014-Torqeedo-Manual at 5 (“However, you must not submerge the tiller and the shaft head and you must keep the plug contacts in the tiller dry. Submerging the tiller and the shaft can irreparably damage the electronics.”) A POSITA would therefore be motivated to keep the electronics in the watercraft dry.

138. Therefore, a POSITA would combine the teachings of Gleason with those of EvoloVideos to arrive at a watercraft in which the battery and motor speed controller are located in a waterproof container.

E. Ground 5

139. Claims 11 and 13 are rendered obvious under 35 U.S.C. §103 by the combination of EvoloVideos, TorqeedoManual, Woolley, Gleason, and Manning.

1. Claim 11: A watercraft in accordance with claim 8, further comprising a wireless handheld controller having a transmitter, and a throttle interface having a receiver, wherein the transmitter is adapted to send wireless signals to the receiver that cause an output of the propulsion system to change.

140. Manning discloses a wireless handheld device that is intended to affect the output of a motor controller mounted to a water board. Ex-1013-Manning, 2:37-

41 ("Another object of the invention is to provide **a power water board comprising a booster system electrically associated with a controller wherein said controller includes a wireless interface in communication with a remote module associated with a user**.") As shown below, Manning teaches a hand-held apparatus that allows the user to control multiple functions of the board, including an output of the motor. Ex-1013-Manning, 9:24-28 ("For example, the resistive value of control lines (110) changes as control lines (110) **are stretched when a user makes a fist**. Such **changes are sensed by user module** (120) and the **appropriate booster system control signals are sent to controller** (34)."), Fig.7.

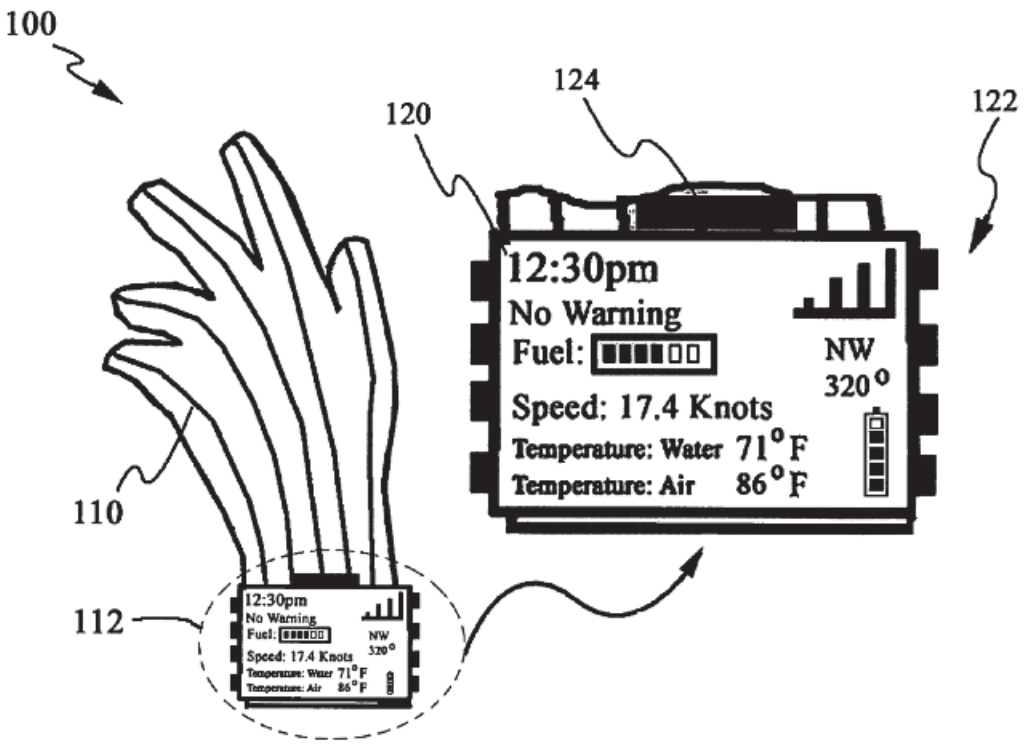

Fig. 7

141. Manning-Patent discloses using a handheld wireless controller having a transmitter (user module 120) to send signals via a transmitter to a throttle interface having a receiver (controller 34). Ex-1013-Manning, 9:24-28.

142. A POSITA would have been motivated to combine the teachings of Manning with EvoloVideos with a reasonable expectation of success. Manning and EvoloMovies are all related to powered water sporting devices and have similar design considerations. *See, e.g.* Ex-1013-Manning, Ex-1006-EvoloVideos-PrototypeRun.

143. Second, as the watercraft displayed in EvoloVideos uses a handle mounted throttle (shown in red box below), the user must constantly grip the handle at the specific location of the throttle. Ex-1008-EvoloVideos-EvoloMovie, 0:08.

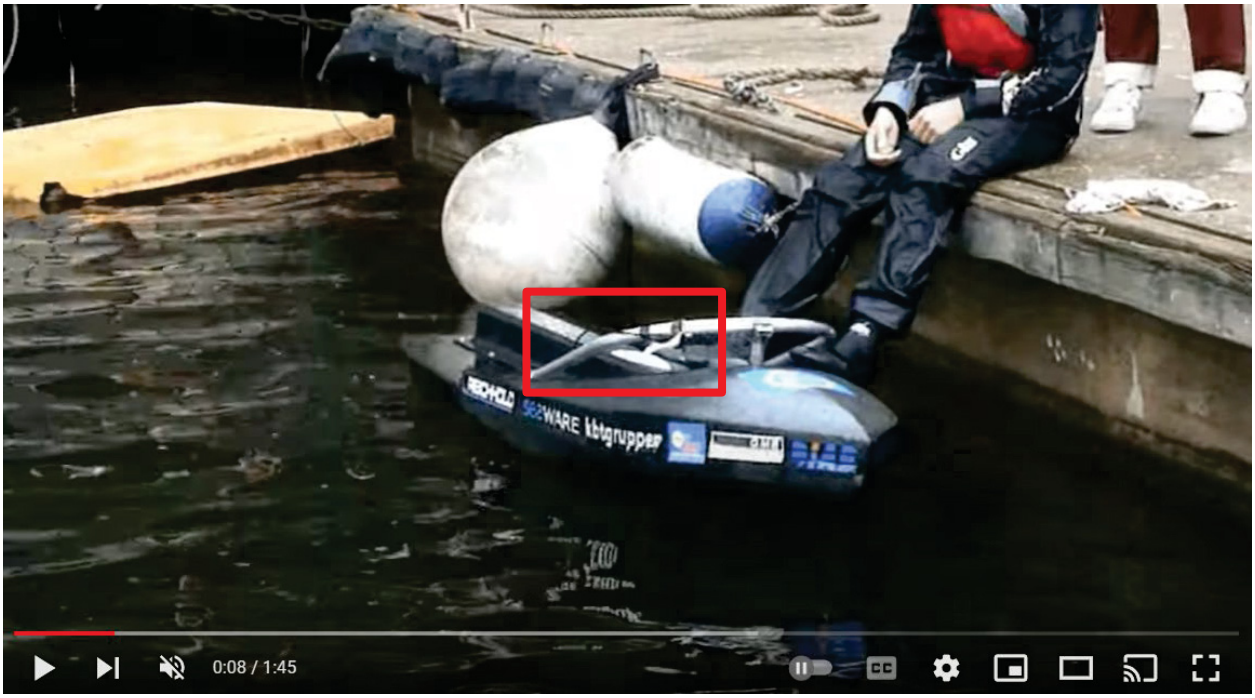

By removing this limitation, a user would be able to grip the handles in whatever location is most comfortable and offers the most support and control.

144. Third, wireless control devices were generally known in the art and it would be well within the skill of a POSITA to use a wireless connection to control the output of an electric motor.

145. Therefore, a POSITA would have readily applied Manning-Patent's wireless handheld control device to the watercraft in EvoloVideos to yield

predictable results (a wireless handheld controller having a transmitter and a throttle interface having a receiver, wherein the controller can cause an output of the propulsion system to change). A POSITA would have combined EvoloVideos and Manning's teachings with a reasonable expectation of success given that Manning's wireless handheld controller would be used for its intended purpose of controlling the output of a motor on a watercraft.

2. Claim 13: A watercraft in accordance with claim 8, wherein the strut has an internal passage and electrical wires extend from the electric motor to the waterproof compartment inside the strut through the internal passage for controlling the electric motor.

146. EvoloVideos teaches a strut having an internal passage and electrical wires extending from the electric motor to the waterproof compartment inside the strut through the internal passage for controlling the electric motor. Ex-1010-EvoloVideos-Torqeedo, 0:30.

147. As depicted above, the strut contains a passage having electrical wires extending from the strut. As described above with respect to Claim 10, the motor includes a rod for cables that is inserted into the strut and connects to the flotation device. ¶¶127-130.

148. EvoloVideo-PrototypeRun shows the watercraft in a completed state having the strut connected to the craft below the battery compartment. Ex.1006-EvoloVideos-PrototypeRun 0:09.

149. As shown, the strut connects to the flotation device and provides an internal passage for the electrical wires between the battery compartment and the motor.

X. AVAILABILITY FOR CROSS EXAMINATION

150. In signing this declaration, I recognize that the declaration will be filed as evidence in a contested case before the Patent Trial and Appeal Board of the United States Patent and Trademark Office. I also recognize that I may be subject to cross examination in the case and that cross examination will take place within the United States. If cross examination is required of me, I will appear for cross examination within the United States during the time allotted for cross examination.

XI. RIGHT TO SUPPLEMENT

151. I reserve the right to supplement my opinions in the future to respond to any arguments that the Patent Owner raises and to take into account new information as it becomes available to me.

XII. JURAT

152. I declare that all statements made herein of my own knowledge are true and that all statements made on information and belief are believed to be true; and further that these statements were made with the knowledge that willful false statements and the like so made are punishable by fine or imprisonment, or both, under Section 1001 of Title 18 of the United States Code.

Dated: June 4, 2024

Digitally signed by
Stefano Brizzolara
Date: 2024.06.04
13:32:52 -04'00'

Dr. Stefano Brizzolara