US006443786B2

(12) **United States Patent**
Woolley

(10) **Patent No.: US 6,443,786 B2**
(45) **Date of Patent: *Sep. 3, 2002**

(54) **FLYING SKI**

(75) Inventor: **Robert C. Woolley**, Lake Havasu City, AZ (US)

(73) Assignee: **Air Chair, Inc.**, Lake Havasu City, AZ (US)

(*) Notice: Subject to any disclaimer, the term of this patent is extended or adjusted under 35 U.S.C. 154(b) by 0 days.

This patent is subject to a terminal disclaimer.

(21) Appl. No.: **09/808,307**

(22) Filed: **Mar. 14, 2001**

Related U.S. Application Data

(63) Continuation of application No. 09/404,236, filed on Sep. 23, 1999.

(51) **Int. Cl.**[7] **B63B 1/00**

(52) **U.S. Cl.** **441/65**; 441/72; 441/79; 114/253; 114/280

(58) **Field of Search** 441/65, 68, 72, 441/79; 114/253, 274, 275, 276, 277, 278, 279, 280, 281, 282, 283

(56) **References Cited**

U.S. PATENT DOCUMENTS

2,257,406	A	9/1941	Burtenbach
2,597,048	A	5/1952	Almqvist et al.
2,751,612	A	6/1956	Shepard
2,930,338	A	3/1960	Flomenhoft
2,931,332	A	4/1960	Hebrank
2,955,559	A	10/1960	Palmer et al.
3,003,778	A	10/1961	Taggard
3,026,546	A	3/1962	Kakes
3,085,537	A	4/1963	Headrick et al.
3,092,857	A	6/1963	Churchman
3,092,858	A	6/1963	Wallach
3,105,249	A	10/1963	Palmore

(List continued on next page.)

FOREIGN PATENT DOCUMENTS

FR	17.387	6/1913
FR	1.295.926	5/1962

OTHER PUBLICATIONS

BW Rotor Co., Inc. Advertisement regarding Flying Water Ski, facsimile received Jan. 25, 1994.

BW Rotor Co., Inc. Advertisement regarding Knee Skee, Sky Ski and Sky Bike, date unknown.

Web site information from Cyber Sea, www.cyber–sea.com modified, Jun. 15, 1998.

U.S. application No. 09/404,236, filed Sep. 23, 1999, entitled Improved Flying Ski.

Primary Examiner—S. Joseph Morano
Assistant Examiner—Ajay Vasudeva
(74) *Attorney, Agent, or Firm*—Knobbe, Martens, Olson & Bear LLP

(57) **ABSTRACT**

The improved flying ski is designed to be towed behind a conventional powered watercraft utilizing a standard ski tow rope or similar device having a handle that can be held by a human rider. In use, the rider is seated on the seat of the flying ski and towed by the watercraft. The improved flying ski comprises an elongate board and a seat that extends generally perpendicular to and upward from the board to support the seated rider's buttocks. The rider's legs extend toward the front of the board and are secured by a pair of foot holders that attach to the board. An elongate strut extends generally perpendicular to and downward from the board and couples the seat to a planing blade. The planing blade advantageously has a front blade and a rear blade interconnected by a fuselage. The improved flying ski accommodates a variety of rider skill levels by incorporating a mechanism and system that allows the rider to selectively adjust performance characteristics of the ski. In particular, the rider can control stability, lift and maneuverability ski characteristics to accommodate the rider's particular skill level and the particular challenge that the rider seeks. The improved flying ski also provides for quick and easy attachment and detachment of component parts of the ski. This feature allows the ski to be more easily transported when not in use and reduces the risk of accidentally dropping or otherwise damaging the ski.

9 Claims, 15 Drawing Sheets

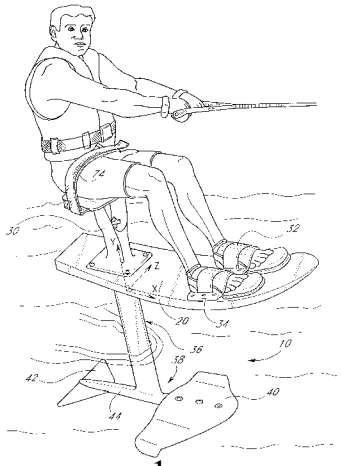

WAYDOO 1011

U.S. PATENT DOCUMENTS

3,121,890	A		2/1964	Rumsey, Jr.
3,123,844	A		3/1964	Bailey
3,145,399	A		8/1964	Jackson
3,164,119	A		1/1965	Emmanuel et al.
3,182,341	A		5/1965	Rieffle
3,201,807	A		8/1965	Weaver
3,208,422	A		9/1965	Schopmeyer
3,216,031	A		11/1965	Ingold, Jr.
3,221,697	A		12/1965	Allegretti
3,221,698	A		12/1965	Turner
3,294,055	A		12/1966	McGuire
3,326,165	A		6/1967	Collins
3,455,264	A		7/1969	Castellani
3,472,192	A		10/1969	Yuan
3,547,063	A		12/1970	Follett
3,604,031	A		9/1971	Cahill et al.
3,617,070	A		11/1971	Roberts
3,651,775	A		3/1972	Kock
3,688,723	A		9/1972	Ulvesand et al.
3,744,811	A		7/1973	Johnston
3,747,138	A		7/1973	Morgan
3,803,653	A		4/1974	Trostad
3,996,868	A		12/1976	Schagen
4,028,761	A		6/1977	Taylor
4,050,397	A		9/1977	Vanderleest
D265,116	S		6/1982	Churchill
4,361,103	A		11/1982	Willat
4,508,046	A		4/1985	Coulter et al.
4,593,926	A		6/1986	Pergola
4,669,992	A		6/1987	Morris
4,720,280	A		1/1988	Hufnagl et al.
4,811,674	A		3/1989	Stewart
4,857,025	A		8/1989	Brown et al.
4,857,026	A		8/1989	Hull
4,977,847	A		12/1990	Bartlett
5,100,354	A		3/1992	Woolley et al.
5,136,961	A		8/1992	Follett
5,231,950	A		8/1993	Poulos
5,249,998	A		10/1993	Woolley et al.
5,544,607	A		8/1996	Rorabaugh et al.
5,647,296	A		7/1997	Pasanen
6,070,543	A		6/2000	A'Lateef
6,234,856	B1	*	5/2001	Woolley 441/65

* cited by examiner

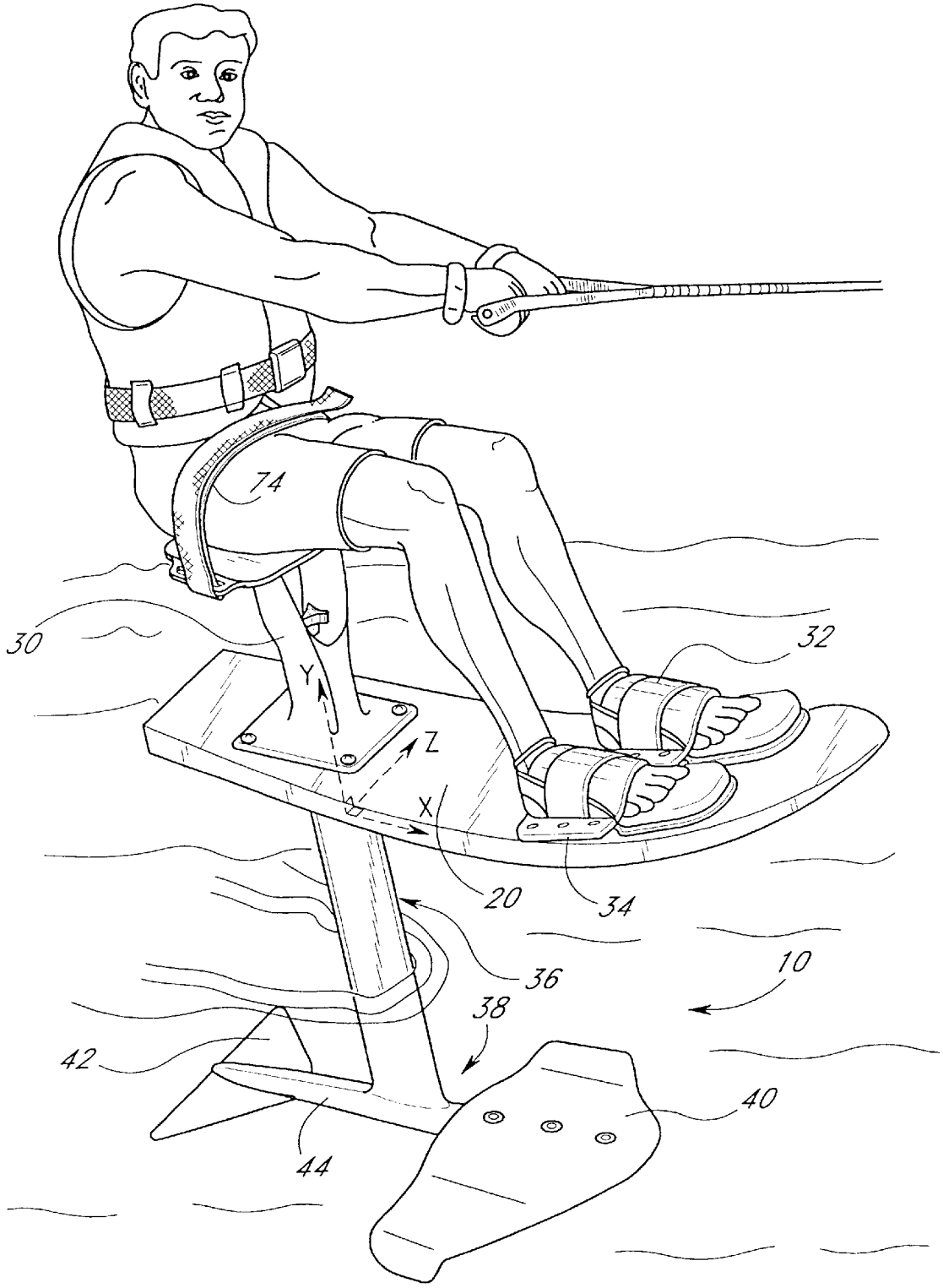

FIG. 1

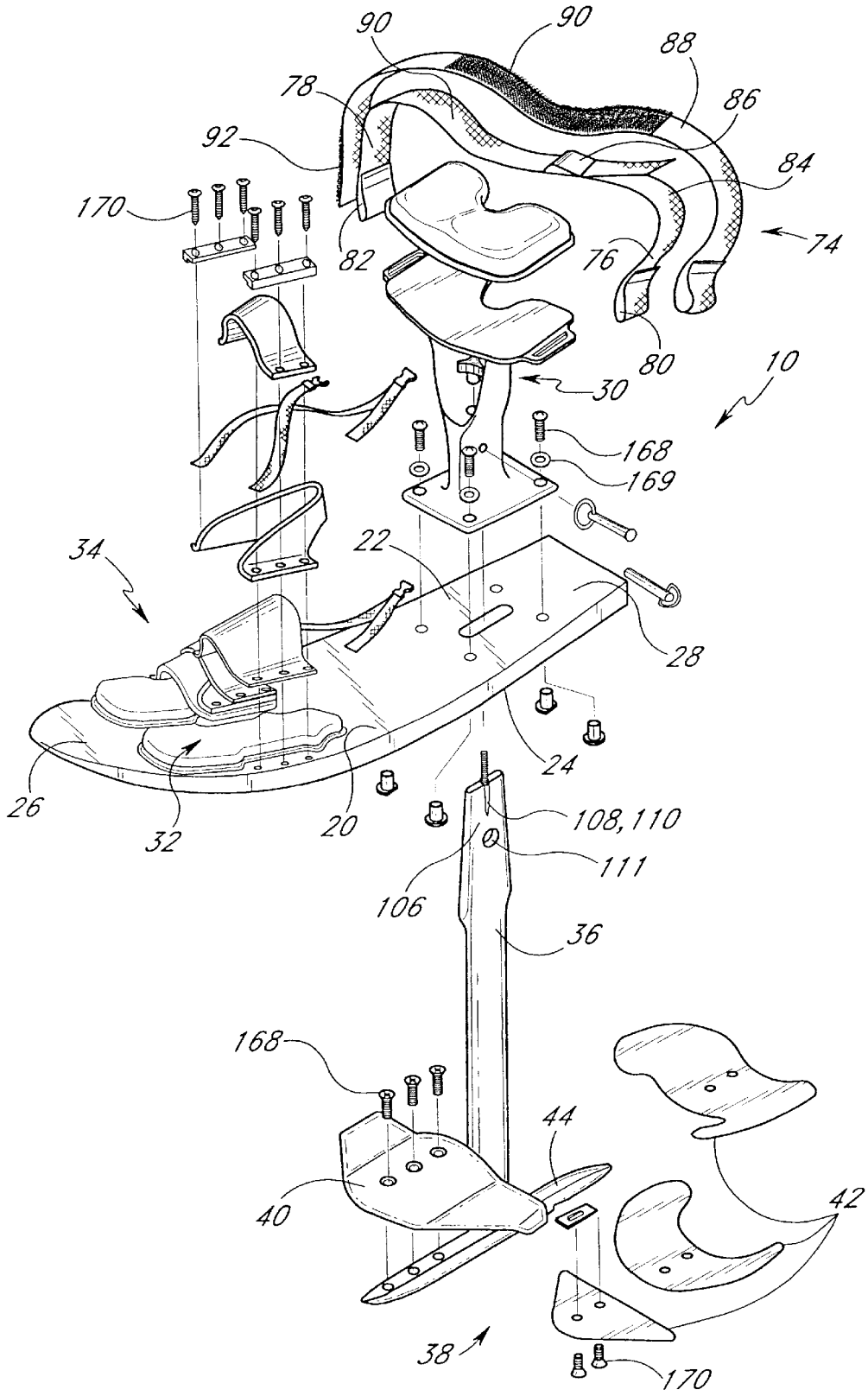
90
90
88
78
86
92
84
170
74
82
76
80
10
30
168
169
34
22
28
24
26
32
20
108,110
111
106
36
168
44
40
42
38
170

FIG.2

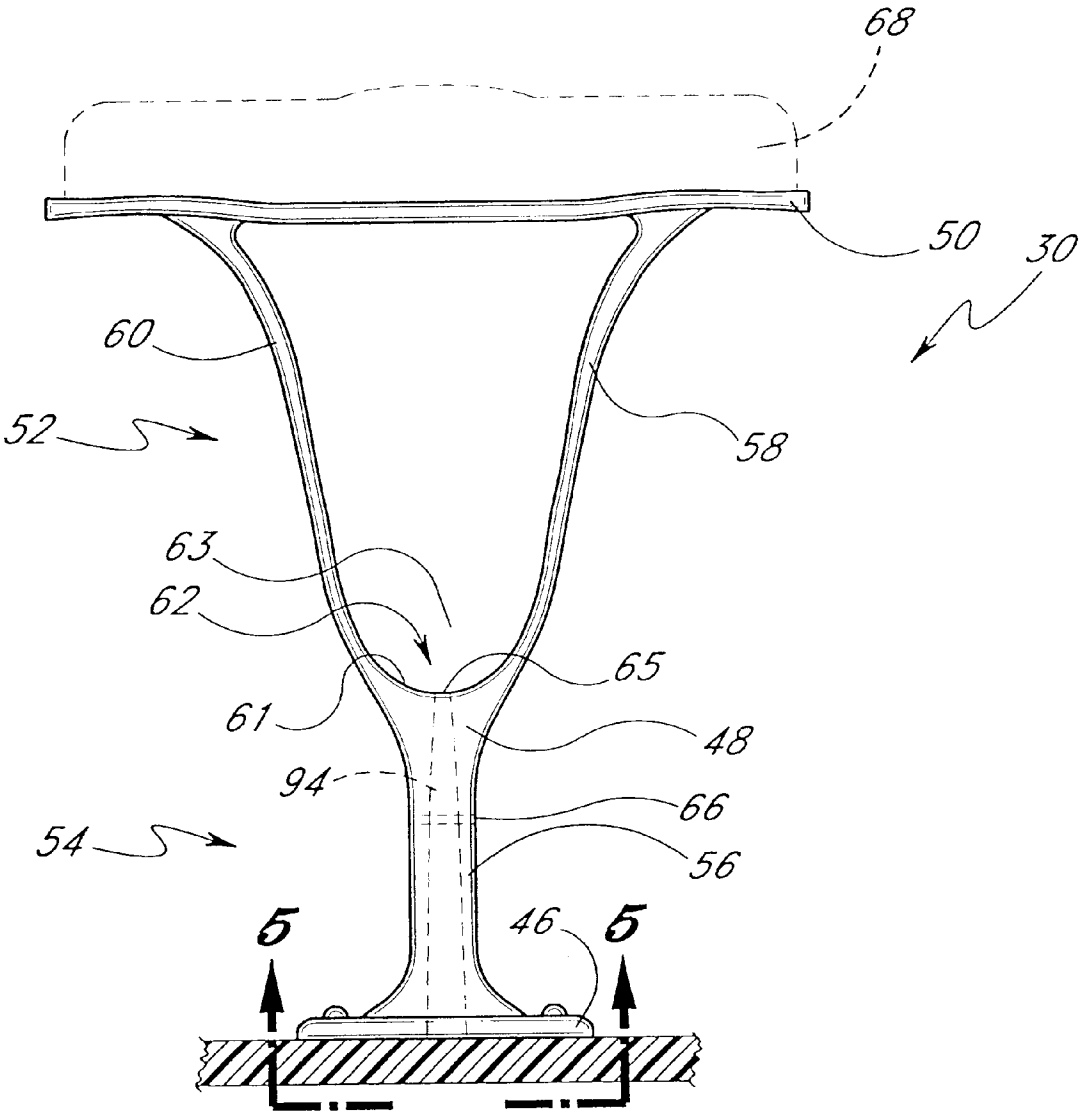

FIG. 3

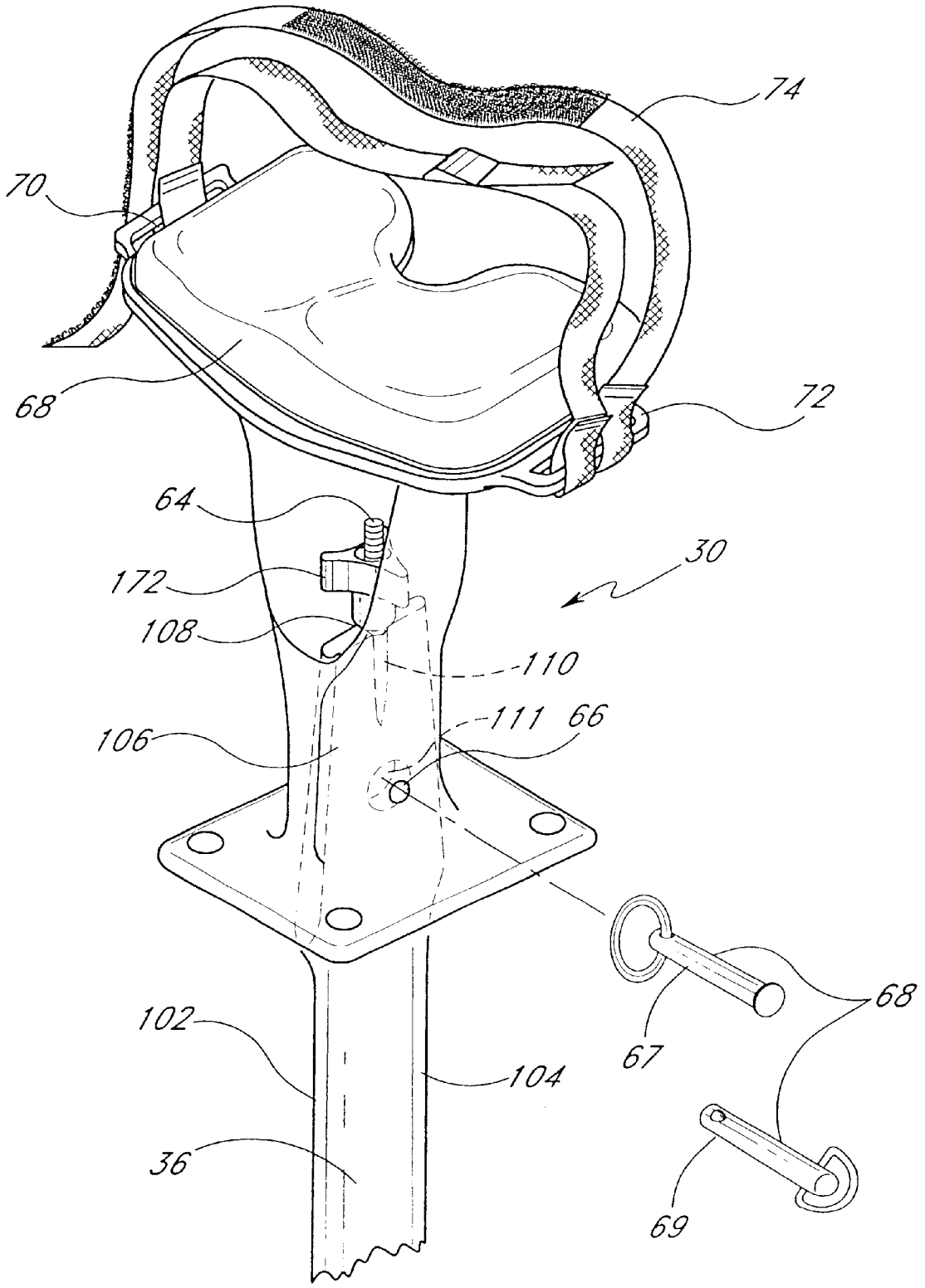

FIG. 4

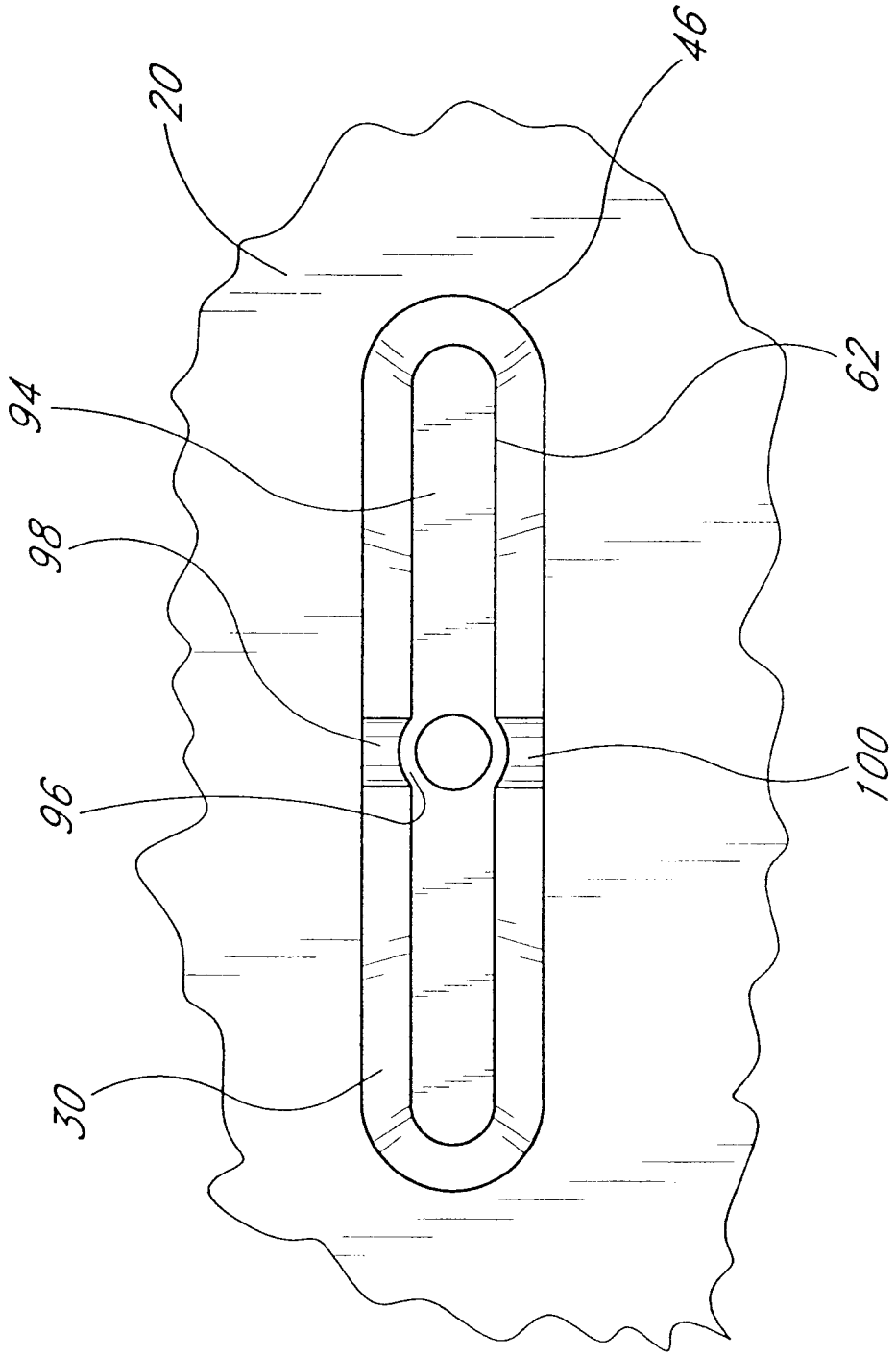

FIG. 5

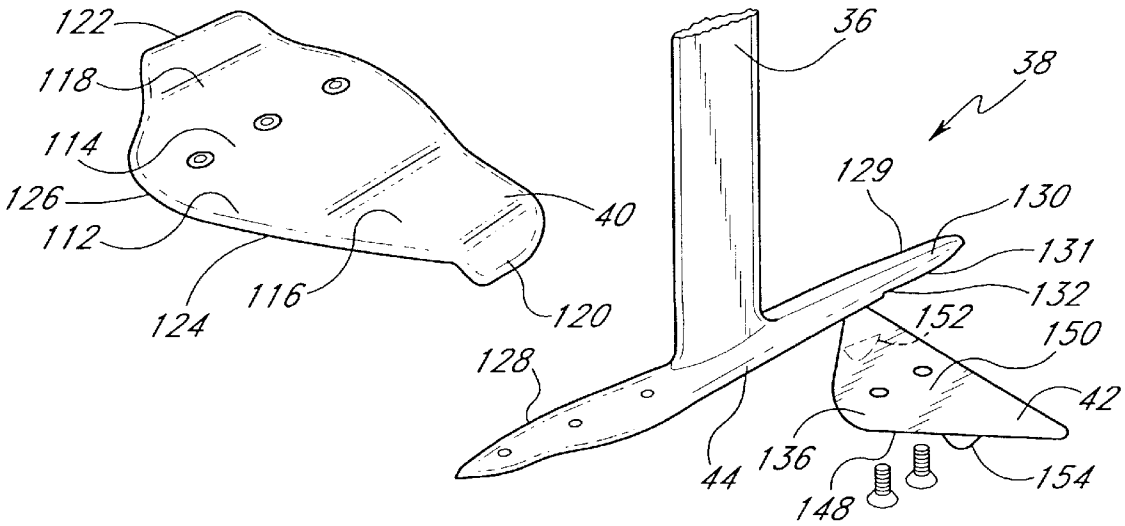
122
118
114
126
112
124
116
40
120
36
38
129
130
131
132
152
150
128
42
44
136
148
154

FIG. 6A

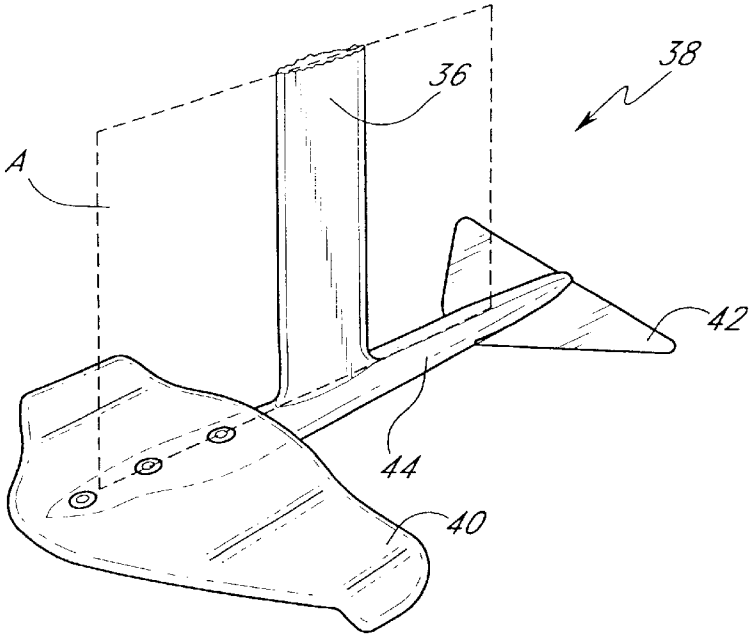
38
36
A
42
44
40

FIG. 6B

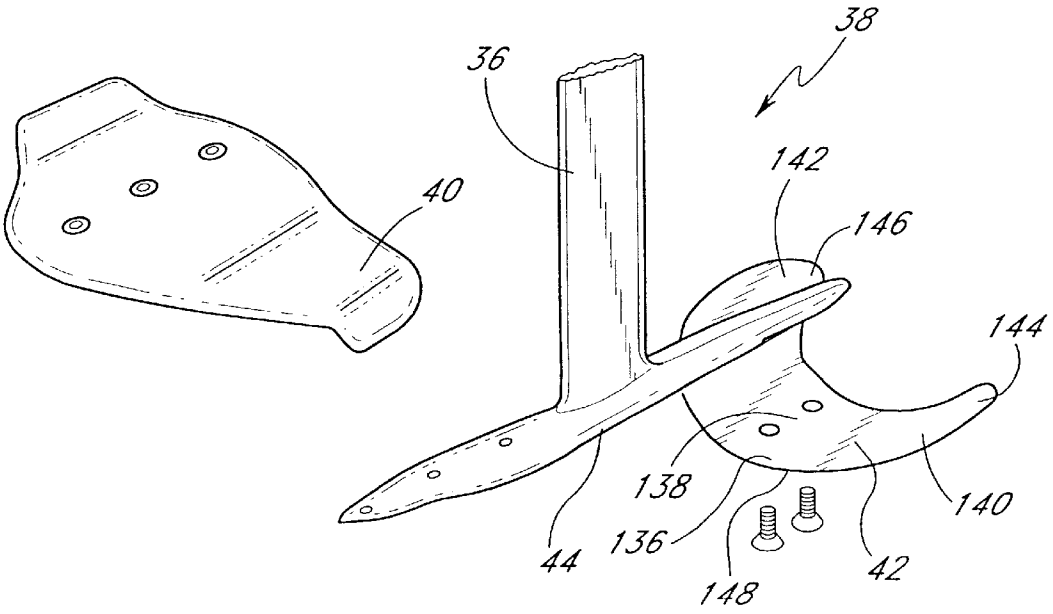

FIG. 7A

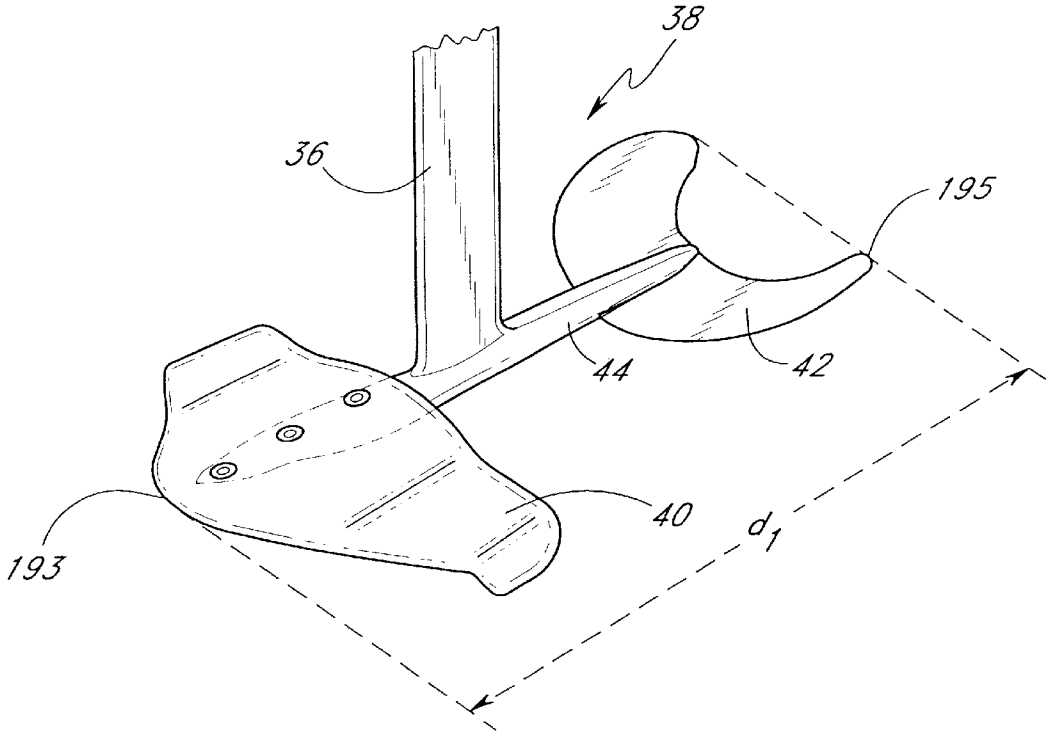

FIG. 7B

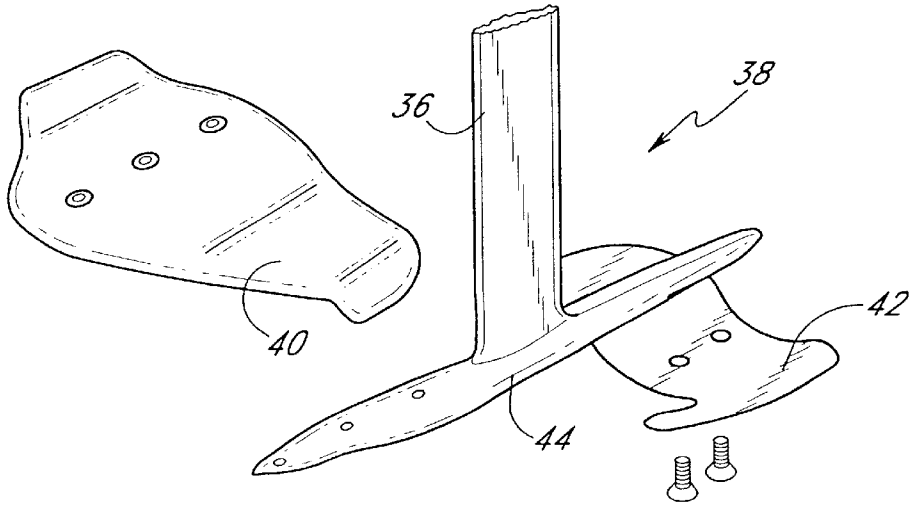

FIG. 8A

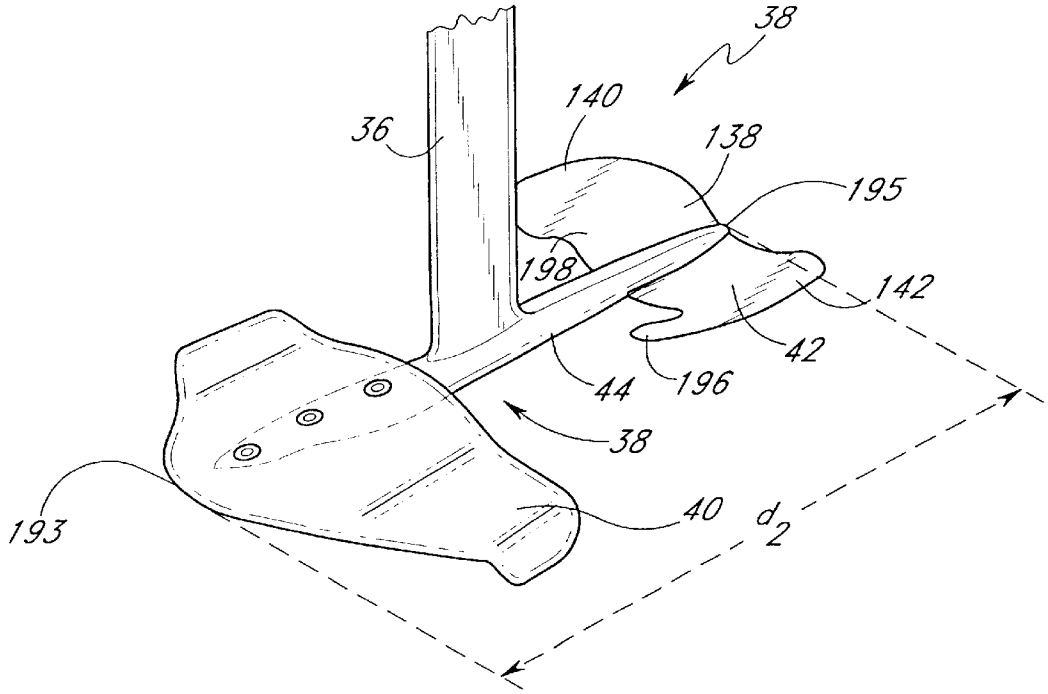

FIG. 8B

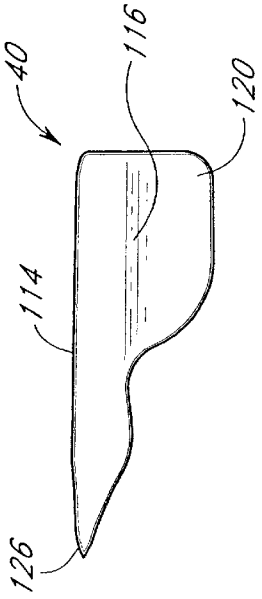

FIG. 9B

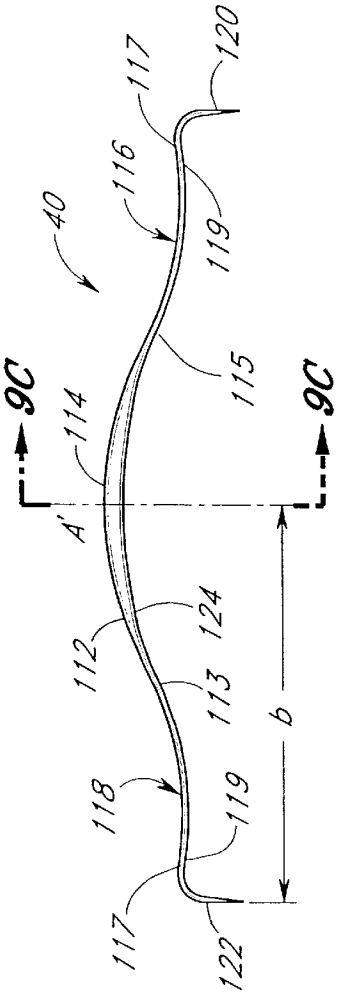

FIG. 9A

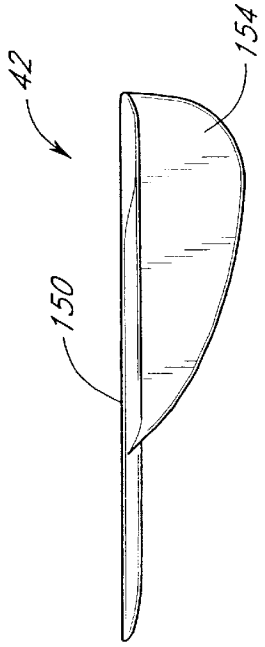

FIG. 10B

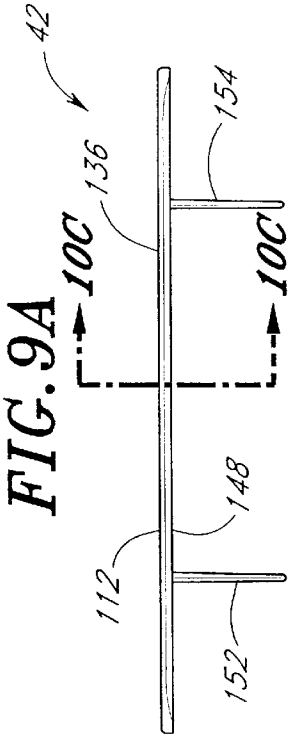

FIG. 10A

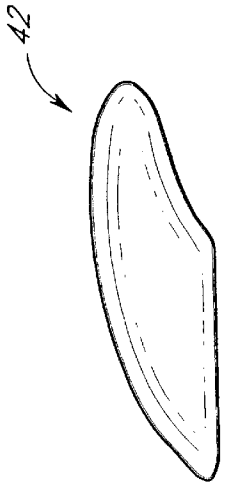

FIG. 11B

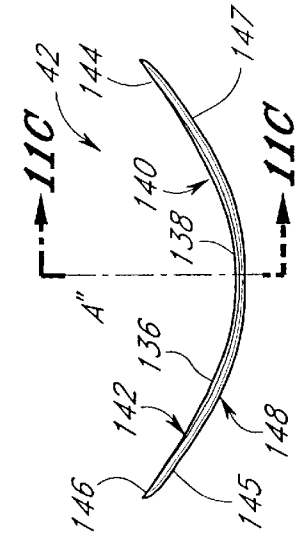

FIG. 11A

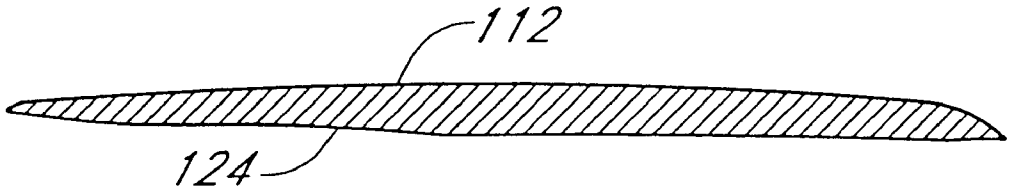

FIG. 9C

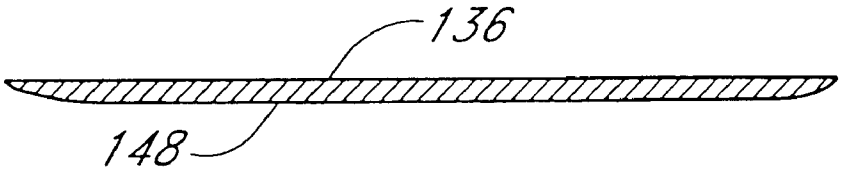

FIG. 10C

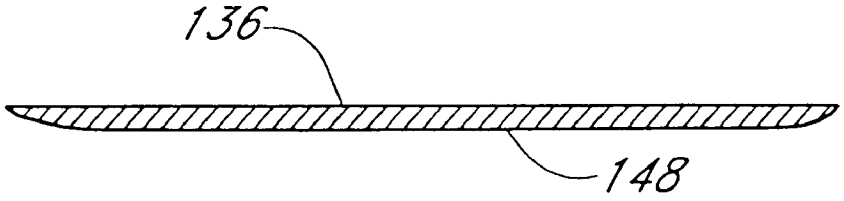

FIG. 11C

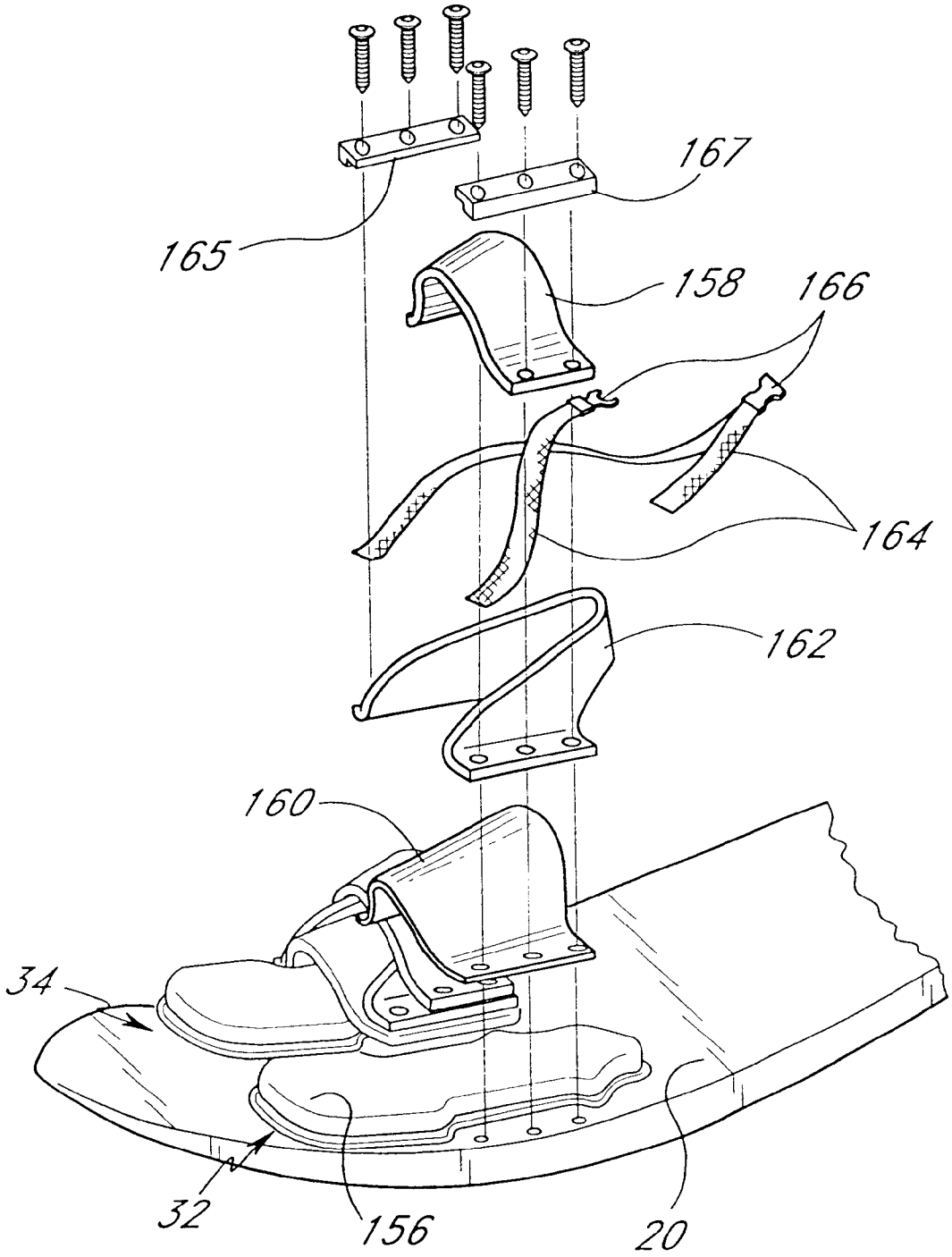

FIG. 12

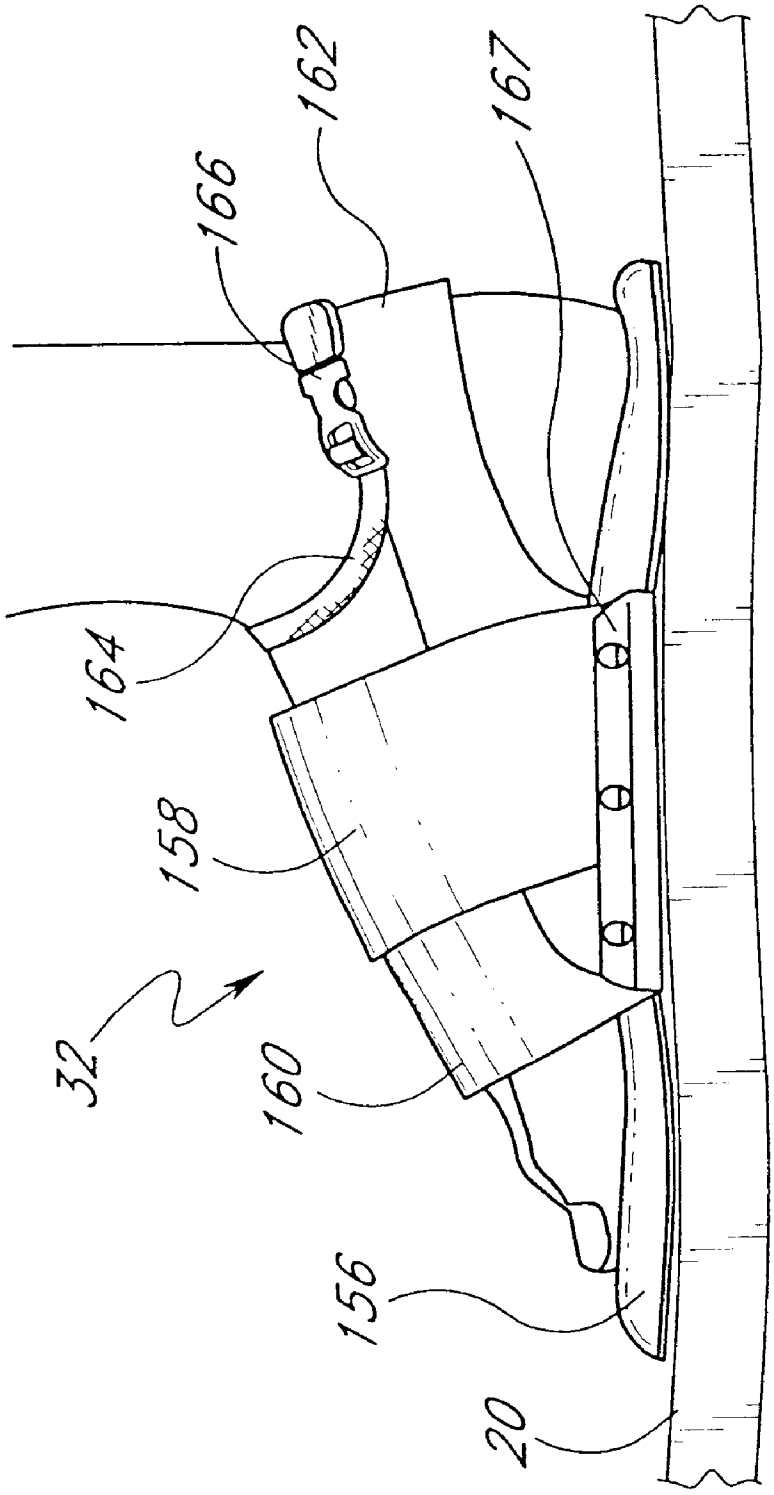

FIG. 13

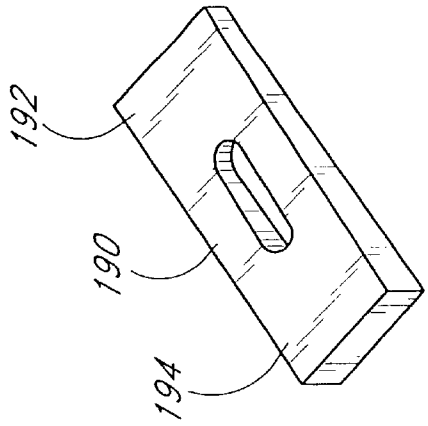

FIG. 16

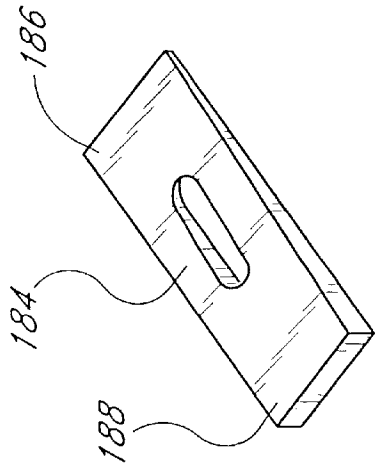

FIG. 15

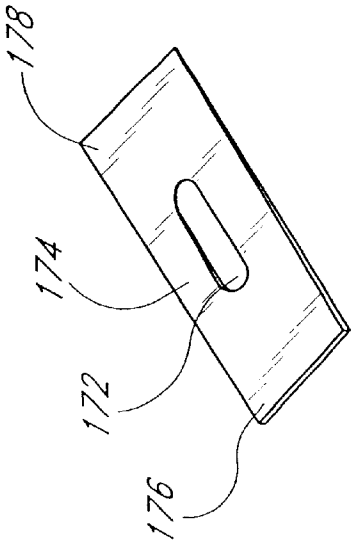

FIG. 14

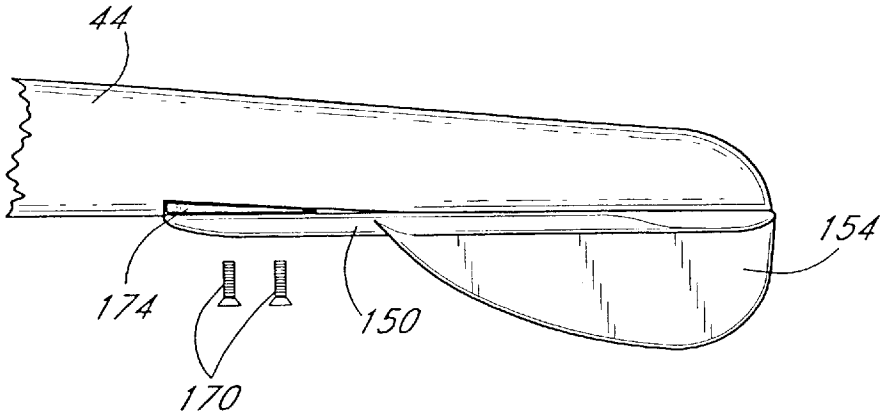

FIG. 17A

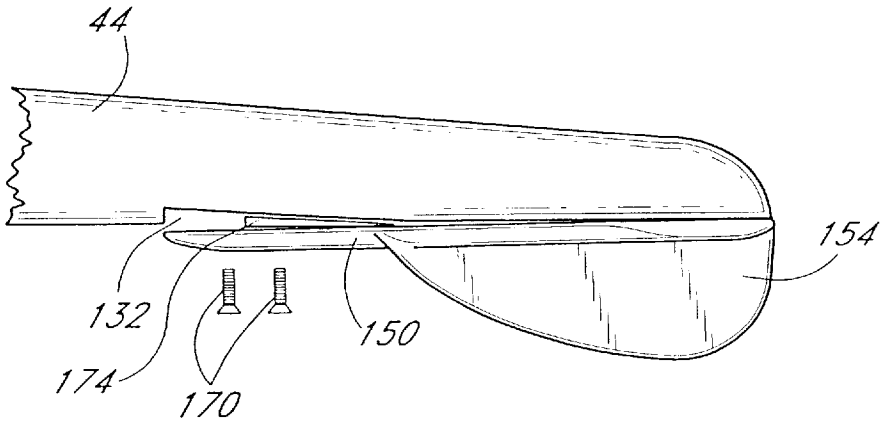

FIG. 17B

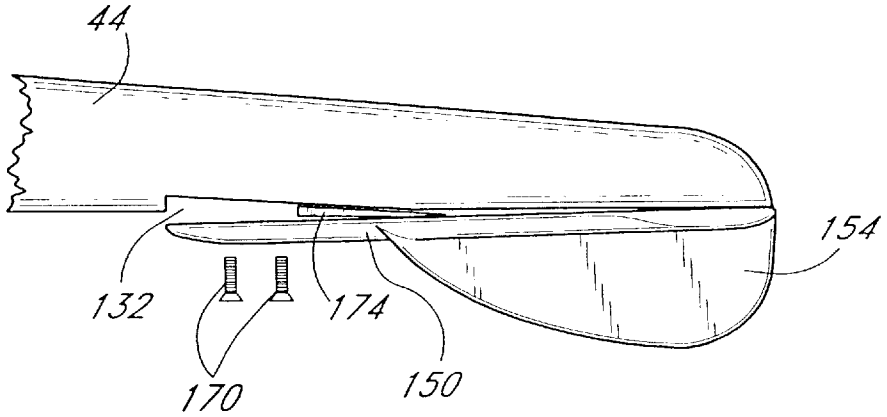

FIG. 17C

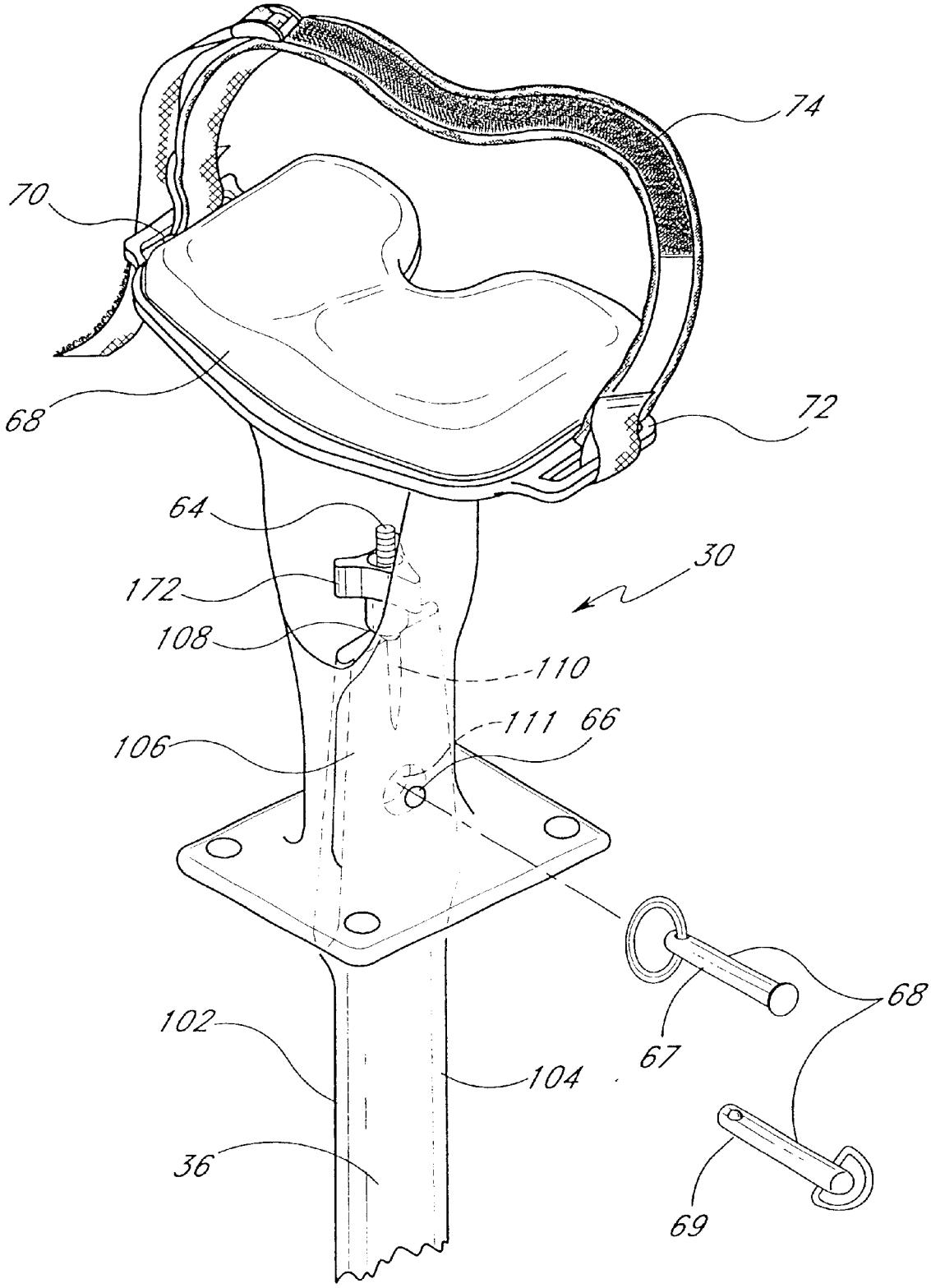

FIG. 18

FLYING SKI

This application is a continuation of prior application Ser. No. 09/404,236 filed Sep. 23, 1999.

BACKGROUND OF THE INVENTION

1. Field of the Invention

This invention relates to recreational water equipment and, in particular, to an improved flying ski and method of use.

2. Description of the Related Art

U.S. Pat. Nos. 5,100,354 and 5,249,998 disclose an apparatus known as a flying ski. The flying ski is a device adapted to be towed behind a powered watercraft in a manner similar to a water ski. In contrast to a water ski, however, the rider sits on a seat spaced above the ski board and primarily rides on a blade structure that is spaced below the ski board by a vertical strut. When the ski is in use, the rider, seat and board are above the water surface and the blade structure is submerged below the water surface. The flying ski disclosed in the above-identified patents was a pioneering recreational water device.

As flying ski popularity has increased, it has been observed that beginning riders with low skill levels tend to find the flying ski relatively difficult to operate and can become frustrated to the point that they do not attempt to use the ski again. It has also been observed that advanced riders with high skill levels tend to find the flying ski too easy to operate and insufficiently challenging.

A need therefore exists for an improved flying ski.

SUMMARY OF THE INVENTION

The present invention provides an improved flying ski that accommodates a variety of rider skill levels by incorporating a mechanism and system that allows the rider to selectively adjust performance characteristics of the ski. In particular, ski stability, lift and maneuverability can be controlled by the rider to accommodate the rider's particular skill level and the particular challenge that the rider seeks.

The improved flying ski must be appreciated in the context of the conditions to which it is subjected and the environment within which it is used. Flying skis can be used to jump over twenty feet in the air. Landing impacts from such jumps are very large. Accordingly, the ski structural configuration must be adapted to withstand these forces. Additionally, it is highly desirable that the ski configuration be adapted to minimize the transfer of these forces to the spine of the rider. Finally, riders of different skill levels will often be riding in the same boat and wish to use the same flying ski. Accordingly, it is highly desirable that the flying ski be easily and reliably adjustable to accommodate the various skill levels. The ski configuration should also require a minimum of parts and disassembly thereof, to avoid the risk of parts falling overboard or being lost.

One aspect of the present invention involves a recreational device that supports a seated human rider while the rider and the device are towed behind a powered watercraft. This recreational device comprises an elongated board having a front end and a back end, a seat, a strut which depends from one of the board and the seat and defines a plane of symmetry, and a blade assembly secured to the strut.

The seat extends from the board for supporting the buttocks of the seated rider at a position spaced above the board.

The blade assembly has a front blade and a rear blade connected by a fuselage. The front blade includes a first

portion defining a first surface on a first side of the plane of symmetry. The front blade also includes a second portion defining a second surface on a second side of the plane of symmetry. The first surface and the second surface direct water toward the plane of symmetry upon landing of the front blade on water.

The front blade has a leading edge and the rear blade has a first edge and a second edge. The rear blade is mountable on the fuselage in a first position wherein the first edge defines a trailing edge of the blade assembly. The rear blade is mountable on the fuselage in a second position wherein the second edge defines a trailing edge of the blade assembly. In one embodiment, the greatest perpendicular distance between the leading edge and the first edge when the rear blade is in the first position is longer than the greatest perpendicular distance between the leading edge and the trailing edge when the rear blade is in the second position.

The rear blade may include a first portion defining a first surface on a first side of the plane of symmetry and a second portion defining a second surface on a second side of the plane of symmetry wherein the first surface and the second surface directed water away from the plane of symmetry upon landing of the rear blade on water.

The front blade may further comprise a first depending fin on the first side of the plane of symmetry at a first outer side of the front blade and a second depending fin on the second side of the plane of symmetry at a second outer side of the front blade. These first and second fins may be angled toward the plane of symmetry from front to back.

The front blade may further comprise a third portion which defines a third surface on the first side of the plane of symmetry which directs water away from the plane of symmetry upon landing of the front blade on water as well as a fourth portion which defines a fourth surface on the second side of the plane of symmetry which directs water away from the plane of symmetry upon landing of the front blade on water.

In accordance with the present invention, the front blade may have an upper surface that is curved such that the pressure exerted on said front blade from above is lower than the pressure exerted on the front blade from below.

The rear blade may include a first upwardly curved portion defining a first surface on a first side of the plane of symmetry and a second upwardly curved portion defining a second surface on a second side of the plane of symmetry. In this embodiment, the first surface and the second surface direct water away from the plane of symmetry upon landing of the rear blade on water.

Another aspect of the present invention also involves a recreational device that supports a seated human rider while the rider and the device are towed behind a powered watercraft. This recreational device comprises an elongated board having a front end and a back end, a seat, a strut depending from either the board or the seat and defining a plane of symmetry, and a blade assembly secured to the strut.

The seat extends from the board and supports the buttocks of the seated rider at a position spaced above the board.

At least a portion of the strut is submerged underwater when the device is in use.

The blade assembly has a front blade and a rear blade connected by a fuselage. The front blade has a leading edge and the rear blade has a first edge and a second edge. The rear blade is mountable on the fuselage in a first position wherein the first edge defines a trailing edge of the blade

assembly. The rear blade is mountable on the fuselage in a second position wherein the second edge defines a trailing edge of the blade assembly. The greatest perpendicular distance between the leading edge and the first edge when the rear blade is in the first position is longer than the greatest perpendicular distance between the leading edge and the trailing edge when the rear blade is in the second position.

The recreational device may further comprise a blade support mounted between the fuselage and the rear blade. The blade support has a first position in which the blade support cooperates with the fuselage to position the rear blade so as to have a first angle of attack. The blade support has a second position in which the blade support cooperates with the fuselage to position the rear blade so as to have a second angle of attack. A fastener may selectively secure both the rear blade and the blade support in a fixed position.

Another aspect of the present invention involves a kit which can be assembled to form a recreational device that supports a seated human rider while the rider and the device are towed behind a powered watercraft. The kit comprises an elongated board having a front end and a back end, a seat, a strut which is securable to one of the board and the seat and which defines a plane of symmetry, a blade assembly, and a plurality of blade supports.

The seat extends from the board for supporting the buttocks of the seated rider at a position spaced above the board.

The blade assembly is securable to the strut. The blade assembly has a front blade and a rear blade connected by a fuselage. The front blade has a leading edge and the rear blade has a first edge and a second edge. The rear blade is mountable on the fuselage in a first position wherein the first edge defines a trailing edge of the blade assembly. The rear blade is mountable on the fuselage in a second position wherein the second edge defines a trailing edge of the blade assembly. The greatest perpendicular distance between the leading edge and the first edge when the rear blade is in the first position is longer than the greatest perpendicular distance between the leading edge and the trailing edge when the rear blade is in the second position.

Each of the blade supports are alternatively mountable between the fuselage and the rear blade. Each of the plurality of blade supports are sized and shaped to cooperate with the fuselage to position the rear blade so as to have an angle of attack.

Another embodiment of the invention is directed to a blade for use with a flying ski type recreational device that supports a seated human rider while the rider and the device are towed behind a powered watercraft. The blade defines a plane of symmetry and includes a first portion defining a first surface on a first side of the plane of symmetry and a second portion defining a second surface on a second side of the plane of symmetry. The first surface and the second surface direct water toward the plane of symmetry upon landing of the blade on water.

This embodiment includes a first depending fin on the first side of said plane of symmetry at a first outer side of the blade as well as a second depending fin on the second side of the plane of symmetry at a second outer side of the blade.

The first and second fins can be angled toward the plane of symmetry from front to back.

The blade may further comprises a third portion which defines a third surface on the first side of the plane of symmetry which directs water away from the plane of symmetry upon landing of the blade on water as well as a fourth portion which defines a fourth surface on the second side of the plane of symmetry which also directs water away from the plane of symmetry upon landing of the blade on water.

This blade may define between 69 and 114 square inches. Alternatively, this blade may define between 82 and 101 square inches.

Another aspect of the invention involves a method of varying the attack angle of a planing blade for use with a flying ski type recreational device that supports a seated human rider while the rider and the device are towed behind a powered watercraft. The method comprises providing a fuselage that removably attaches to any one of a plurality of rear planing blades and selecting one rear planing blade and attaching the selected rear planing blade to the fuselage.

The step of selecting one rear planing blade may include selecting one rear planing blade with a generally planar surface or one with a curved rear planing blade. A curved rear planing blade that has a pair of spaced apart upswept wings may be selected. The curved rear planing blade may be detached from the fuselage and the orientation of the curved rear planing blade reversed so that the curved rear planing blade has a pair of spaced apart frontswept wings. The rear planing blade is then reattached to the fuselage.

The method also may comprise the steps of detaching the rear planing blade from the fuselage, placing a blade support in a cut-out formed in the fuselage and reattaching the rear planing blade to the fuselage.

Further aspects, features, and advantages of the present invention will become apparent from the detailed description of the preferred embodiment of the present invention that follows.

BRIEF DESCRIPTION OF THE DRAWINGS

The above-mentioned and other features of the invention will now be described with reference to the accompanying drawings which are intended to illustrate, but not limit, the concepts of the invention. The drawings contain like reference numerals to designate like parts throughout the figures thereof, and wherein:

FIG. **1** is a perspective view an improved flying ski in accordance with a preferred embodiment of the present invention, illustrating the general orientation of the ski when in use and supporting a seated human rider being towed behind a powered watercraft (not shown);

FIG. **2** is an exploded perspective view of the ski of FIG. **1**, illustrating component parts of the ski;

FIG. **3** is a front elevational view of a seat for the ski of FIG. **1**, illustrating the components thereof;

FIG. **4** is a perspective view of a strut and the seat for the ski of FIG. **1**, illustrating interengagement between the strut and an internal passageway formed within the seat;

FIG. **5** is a bottom plan view of the internal passageway of the seat;

FIG. **6**A is an exploded perspective view of a preferred embodiment of a planing blade for the ski of FIG. **1**;

FIG. **6**B is an assembled perspective view of the planing blade of FIG. **6**A;

FIG. **7**A is an exploded perspective view of another preferred embodiment of a planing blade for the ski of FIG. **1**;

FIG. **7**B is an assembled perspective view of the planing blade for the ski of FIG. **7**A;

FIG. **8**A is an exploded perspective view of another preferred embodiment of a planing blade for the ski of FIG. **1**;

FIG. **8**B is an assembled perspective view of the planing blade for the ski of FIG. **8**A;

FIG. **9**A is a front elevational view of a front planing blade for the ski of FIG. **1**;

FIG. **9**B is a side elevational view of the front planing blade for the ski of FIG. **9**A;

FIG. **9**C is a sectional view along the line **9**C-**9**C of FIG. **9**A;

FIG. **10**A is a front elevational view of a rear planing blade for the ski of FIG. **1**;

FIG. **10**B is a side elevational view of the rear planing blade for the ski of FIG. **10**A;

FIG. **10**C is a sectional view along the line **10**C-**10**C of FIG. **10**A;

FIG. **11**A is a front elevational view of another rear planing blade for the ski of FIG. **1**;

FIG. **11**B is a side elevational view of the rear planing blade for the ski of FIG. **11**A;

FIG. **11**C is a sectional view along the line **11**C-**11**C of FIG. **11**A;

FIG. **12** is an exploded perspective view of a footholder for the ski of FIG. **1**;

FIG. **13** is an assembled side elevational view of the footholder for the ski of FIG. **12**;

FIG. **14** is a perspective view of a first shim for use in connection with varying the attack angle of the planing blade.

FIG. **15** is a perspective view of a second shim for use in connection with varying the attack angle of the planing blade;

FIG. **16** is a perspective view of a third shim for use in connection with varying the attack angle of the planing blade;

FIG. **17**A is a side elevational view of a portion of the planing blade of FIG. **6**A, illustrating the first shim placed within a cut-out of the fuselage and between the fuselage and the rear planing blade to alter the angle of attack of the rear planing blade;

FIG. **17**B is a side elevational view of a portion of the planing blade of FIG. **17**A, illustrating the first shim moved from within a cut-out of the fuselage towards the rear end of the planing blade to increase the angle of attack of the rear planing blade; and

FIG. **17**C is a side elevational view of a portion of the planing blade of FIG. **17**B, illustrating the first shim moved further towards the rear end of the planing blade to further increase the angle of attack of the rear planing blade.

FIG. **18** is a perspective view of the strut and an alternative seat and seatbelt for a flying ski.

DETAILED DESCRIPTION OF THE PREFERRED EMBODIMENT

The present embodiments of the improved flying ski are disclosed in the context of the types of flying ski disclosed in U.S. Pat. Nos. 5,100,354 and 5,249,998, each of which are incorporated by reference in their entirety herein. The principles of the present invention, however, are not limited to the types of flying ski in those disclosures. Instead, it will be understood by one of skill in the art, in light of the present disclosure, that the improved types of flying ski disclosed herein can also be successfully utilized in connection with other types of flying skis, both presently known and later developed, as well as other recreational water and nonwater devices. One skilled in the art may also find additional applications for the improvements disclosed herein. However, the invention described herein is particularly advantageous in connection with the types of flying ski disclosed in the incorporated patents.

The improved flying ski described herein is especially adapted to accommodate a variety of rider skill levels and to provide quick and easy assembly and disassembly of component parts.

With reference to FIGS. **1** and **2**, the improved flying ski **10** comprises an elongate board **20** having an upper face **22** and a lower face **24**, and a front end **26** and a rear end **28**. A seat **30** extends generally perpendicular to and upward from the upper face **22** of the board **20** to support the seated rider's buttocks. The rider's legs extend toward the front end **26** of the board **20** and are secured by a pair of foot holders **32**, **34** that attach to the board **20**. An elongate strut **36** extends generally perpendicular to and downward from the board **20** and couples the seat **30** to a planing blade **38**. The planing blade **38** advantageously has a front blade **40** and a rear blade **42** interconnected by a fuselage **44**.

To assist in the description of the components of the flying ski **10**, the following coordinate terms are used. Referring to FIG. **1**, a "longitudinal axis" ("X") is generally parallel to the longest dimensional section of the elongate board **20** and bisects the strut **36** laterally. A "lateral axis" ("Z") is normal to the longitudinal axis, is generally parallel to the width of the elongate board **20** and bisects the board **36** vertically. A "transverse axis" ("Y") extends normal to both the longitudinal and lateral axes, vertically from the planing blade to the elongate board to the seat and intersects the intersection of the X and Z axis. In addition, as used herein, "the longitudinal direction" refers to a direction substantially parallel to the longitudinal axis; "the lateral direction" refers to a direction substantially parallel to the lateral axis; and "the transverse direction" refers to a direction substantially parallel to the transverse axis. Also, the terms "proximal" and "distal", which are used to describe the present flying ski **10**, are used consistently with the description of the exemplary application. Thus, proximal and distal are used in reference to the center of the seated rider's body. A detailed description of the flying ski **10**, and associated method of use, now follows.

With reference to FIG. **1**, the improved flying ski **10** is desirably towed behind a conventional powered watercraft (not shown) utilizing a standard ski tow rope or similar device having a handle that can be held by the human rider (illustrated at a point spaced above the rider's knees for rider comfort). In use, the rider is seated on the seat of the flying ski and towed by the watercraft.

COMPONENTS

As noted above, the types of flying ski disclosed in the prior art are relatively insensitive to riders with different ability levels and thus beginning riders tend to become frustrated while advanced riders tend to maximize the capabilities of the ski. The present invention incorporates significant changes and modifications to both individual components of the ski **10** as well as to the overall ski **10** itself to accommodate a variety of rider skill levels and to allow the ski to be more easily assembled and disassembled.

The various components of the improved flying ski **10** will now be described in greater detail.

Elongate Board

Referring to FIG. **2**, the elongate board **20** is configured generally similar to the board of the incorporated patents.

The improved board **20** has a longitudinal length of about 0.5 to 5 m, more preferably about 1 to 2 m and most preferably about 1.3 m. The front portion of the board is curved upward at an increasing rate toward the front end **26** of the board **20**. That is, the rear end **28** of the board **20** is substantially planar in the longitudinal direction while the front end **26** has approximately one foot of rise. This rise is greater than that of prior flying skis to improve performance characteristics of the ski **10**, including easing impact on the rider when landing. The lateral width of the board **20** is generally bullet shaped, with the rear end **28** width about 200 mm, a midsection width of about 300 mm, and a front end **26** nose width of about 20-40 mm.

The board **20** is advantageously constructed from hot melt unidirectional and continuous strand glass with expoxy resin. The board desirably has a foam core and nylon backing plates to reinforce the attachment of the bindings. However, the board **20** can be constructed from any of a variety of other suitable materials, such as wood, plastic, fiberglass, metal, composites and the like and combinations thereof, both presently known or later developed.

The board **20** is preferably manufactured by compression molding. However, in other embodiments the board **20** can be manufactured through a variety of other suitable manufacturing techniques, both presently known or later developed.

Seat

Referring to FIGS. **2** and **3**, the seat **30** advantageously has a unitary one-piece construction so that the ski **10** can respond to the rider's actions (e.g. shifting body weight in one particular direction) with minimal "play" that could otherwise exist if the seat **30** comprised separate component parts that shifted relative to one another in response to the rider's actions. However, less preferred embodiments of the seat **30** could have multi-piece construction, so that the seat **30** comprises a plurality of components that interconnect to form the seat **30**.

The seat **30** includes a base portion **46**, an intermediary portion **48**, and a buttocks-receiving portion **50**. The illustrated base portion **46** has a generally rectangular cross-sectional shape to fit within the elongate confines of the board **20**, although, the base portion **46** can be any of a variety of other shapes such as square, circular, oval, triangular, curvilinear and the like. The base portion **46** attaches the seat **30** to the rear end **28** of the board **20**, as described below.

The intermediary portion **48** interconnects the base portion **46** to the buttocks-receiving portion **50**. The intermediary portion **48** has an upper section **52** and a lower section **54**, with the lateral width of the upper section **52** advantageously wider than the lateral width of the lower section **56**. This lateral configuration allows the buttocks-receiving portion **50** to accept a variety of riders' buttocks while allowing the base portion **46** to maintain a smaller footprint and fit within the confines of the board **20**, if desired and as illustrated. However, the upper section **54** may have the same or smaller lateral width than that of the lower section. The illustrated embodiment shows the intermediary portion **48** being generally Y-shaped. This particular shape, as well as other alternative shapes (e.g. inverted triangle, rectangle, cylinder etc.) affords an internal passageway **94** for connecting the seat **30** to the strut **36**, described below.

The exemplary generally Y-shaped intermediary portion has a brace **56** and a pair of upper extensions **58**, **60**, each having a generally oval cross-sectional shape with the major axis in the longitudinal direction and the minor axis in the lateral direction. The brace **56** has a minor axis thickness of at least about 5 mm for structural strength but less than the lateral width of the elongate board **20** for aerodynamic efficiency, hydrodynamic efficiency and reduced weight. The extensions **58**, **60** are preferably symmetrical about the brace **56** and taper away from each other to support opposing ends of the buttocks-receiving portion **50** of the seat **30**, each extension **58**, **60** having a minor axis thickness of about 2-10 mm and more preferably about 4 mm for structural strength.

Referring to FIGS. **3** and **4**, a Y-junction site **62**, accommodates the lateral distance between the joined bottom of the extensions **58**, **60** and has a sufficient surface area **61** to accept at least a portion of a fastener, such as a bolt **64** as well as a sufficient area **63** above the bolt **64** to accept a turn knob **172** with interior threads, nut or other device that interengages with the fastener. The bolt **64** extends through a Y-junction hole **65** in the seat **30** and, in cooperation with the turn knob **172**, provides for quick and easy interconnection between the strut **36** and seat **30**, as explained below. The illustrated Y-junction site **62** has a surface area with a transverse width of about 5-50 mm and more preferably about 10-30 mm, and a lateral width generally similar to that of the brace **56**. The surface area **63** of Y-junction site **62** can be curved, as illustrated, planar or a combination thereof.

A through-hole **66** is arranged through the brace **56** and is designed to accept a conventional safety pin **68**, such as a clevis pin **67** or a ball-lock pin **69**. The safety pin **68** and through-hole **66** provide a redundant coupling structure for securing the strut **36** to the seat **30**. The illustrated through-hole has **66** a diameter of about 5 mm.

The buttocks-receiving portion **50** of the seat **30** is sized and configured to accommodate and support the buttocks of a variety of human riders, whether the particular rider is an adult or child, and irrespective of the weight, proportions or size of the rider. The illustrated buttocks-receiving portion **50** lies generally parallel to the rear end **28** of the board **20** and is supported by the extensions **58**, **60**. The illustrated buttocks-receiving portion **50** is generally rectangular shaped and laterally extends beyond the extensions **58**, **60**. A lateral width of about 300 mm and a longitudinal length of about 150 mm has been found suitable to perform the intended function of the buttocks-receiving portion **50**, however, a variety of other dimensions and geometric configurations could easily be used.

A cushion **68** is advantageously placed over the buttocks-receiving portion **50** for rider comfort. The cushion **68** may be contoured similar to the contours of the seated riders' buttocks and may be constructed of any of a variety of soft, pliable, water-resistant materials such as neoprene, rubber, gel, silicone, plastic and the like for additional rider comfort. The illustrated cushion **68** is generally U-shaped with a pair of depressions formed therein.

Referring to FIGS. **2** and **4**, a pair of openings **70**, **72** are advantageously incorporated along the lateral ends of the buttocks-receiving portion **50** to secure opposing ends of a seat belt **74**. The openings **70**, **72** allow the seat belt **74** to be permanently attached to the seat **30** so that the seat belt **74** cannot be accidentally misplaced or lost. A variety of particular configurations can be used to achieve this purpose. For example, the illustrated seat belt **74** incorporates ends **76**, **78** that are passed through the respective openings **70**, **72** and then stitched to a portion of the seat belt **30** near the respective ends **76**, **78** of the seat belt **74** to form loops **80**, **82**.

A primary lap strap **84** and a buckle **86** cooperate to secure the rider to the seat **30** in a manner similar to that found in

an airplane or automobile. However, the seat belt **74** has a supplemental lap strap **88** to inhibit unintentional loosening of the primary lap strap **84** which may otherwise occur during use as a result of the appreciable movement of the rider. The supplemental lap strap **88** extends over the primary lap strap **84** and buckle **86** and can be configured and used in a wide variety of ways. For example, and as illustrated, the supplemental lap strap **88** can be placed over the primary lap strap **84** (thereby exposing Velcro hook fasteners **90** attached to a portion of the supplemental lap strap **88**), looped through one of the openings **70** and then backtracked over itself (thereby aligning Velcro loop fasteners **92** attached to a portion of the supplemental lap strap **88**, that interlock with the Velcro hook fasteners **90**). Of course, a variety of other seat belt and seat belt type securement devices could be used to secure the rider to the seat **30** and to inhibit unintentional loosening of the primary lap strap **84**.

Referring to FIGS. **3**, **4** and **5**, at least a portion of the seat **30** interior is hollow and forms a passageway **94** through which a portion of the strut **36** extends. The passageway **94** is advantageously sized and configured to form a keyway groove **96** that accepts and form-fits with the strut **36**. This configuration reduces "play" caused by attachment of these parts **30**, **36**. The illustrated keyway groove **96** extends through the base and intermediary portions **46**, **48** of the seat **30** and is generally oval shaped like the brace **56**. Of course, a variety of other shapes can be used to form the keyway groove **96**. Importantly, the keyway groove **96** is tapered such that the smallest cross-section of surfaces defining the grove is near the Y-junction site **62** and the largest cross-section of the surfaces defining the grove is near the base portion **46**, the particular taper shown being a Morse taper. The keyway groove **96** also has a pair of opposing tracks **98**, **100** recessed into the seat body **30**. The tracks **98**, **100** further reduce "play" and allow the keyway groove **96** and strut **36** to form-fit.

The illustrated unitary seat **30** is preferably constructed from cast aluminum and particularly **365**A aluminum for strength, cost, hydrodynamic efficiency, and ease of manufacture. However, the seat **30** can be constructed from any of a variety of other suitable materials, such as wood, plastic, fiberglass, metal, composites and the like and combinations thereof, both presently known or later developed.

Strut

Referring to FIGS. **2**, **4** and **6**, the strut **36** extends in the transverse direction and couples the planing blade **38** to the seat **30**. The strut **36** defines a plane of symmetry A that runs through the planing blade **38**.

The illustrated strut **36** is formed in unity with at least a portion of the planing blade **38** and, like the seat **30**, is constructed from **365**A cast aluminum. However, the strut **36** can be formed as a stand-alone component part of the ski and comprise any of the materials identified above.

The strut **36** has a transverse length of about 0.3–2 m and preferably about 0.9 m to provide a suitable distance between the board **20** and planing blade **38**. If the board **20** and planing blade **38** are too close or too far apart, performance characteristics of the ski tend to decrease. In cross-section, the strut **36** has a generally oval-shaped hydrodynamically efficient configuration that reduces drag and turbulent waterflow and around the strut **36**, the major axis extending in the longitudinal direction and the minor axis extending in the lateral direction. More particularly, the lateral thickness of the strut **36** is oblong with a forward end **102** thickness of about 2-5 mm before tapering to a rounded point, and a rearward end **104** thickness of about 1-4 mm before tapering to a rounded point.

A tongue **106** extends from the upper end of the strut **36** and is sized and configured to form-fit with the keyway groove **96** of the seat **30**. The illustrated tongue **96** has a Morris taper with a centered stainless steel bolt **64** extending therefrom and reinforcing ears **108**, **110**. A portion of the bolt **64** is cast into the tongue **106** about 20–50 mm and preferably about 35 mm for strength and so that it will not break off from the strut **36**. The portion of the bolt **64** that is not cast in the tongue **106** extends from the tongue **106** for a transverse height of about 20–50 mm and preferably about 35 mm, and has a diameter of about 3–7 mm and more preferably about 5 mm to secure the strut **36** to the seat **30**. The ears **108**, **110** laterally surround and reinforce the bolt **64** so the bolt **64** will not break off from the strut **36**, and provide a mating structure that form-fits with the tracks **98**, **110** of the keyway groove **96** of the seat **30** to assist in reducing "play." Ears **108**, **110** having a lateral thickness of about 3–10 mm and longitudinally tapering uniformly along the front and rear ends have been found suitable for this purpose.

A void **111** is arranged through the tongue **106** and aligns with the through-hole **66** in the brace **56** of the seat **30** to enable the safety pin **68** to pass through the strut **36** and seat **30**. As explained above, this provides a redundant coupling structure for these components **30**, **36**.

Planing Blade

Referring to FIGS. **6**–**10**, the planing blade **38** provides stability, lift and responsiveness performance characteristics to the ski **10**. Components of the planing blade **38** are advantageously interchanged to vary these performance characteristics, as discussed below. The ski **10** can thereby accommodate a variety of rider skill levels.

The planing blade or blade assembly **38** advantageously has a front blade **40** and a rear blade **42** interconnected by a fuselage **44**. Each of these components can be each configured in a variety different sizes and shapes to provide different stability, lift and responsiveness characteristics. The unassembled ski **10** advantageously provides a plurality of each of these components **40**, **42**, **44** and can be made commercially available as a kit. Thus, various planing blade components **40**, **42**, **44** when assembled can be selectively interchanged with the other various planing blade components **40**, **42**, **44** when assembled (and subsequently repeatedly disassembled and reassembled) to alter the performance characteristics of the ski **10** as often as the rider prefers. The kit may alternatively comprise a plurality of one-piece unitary planing blades **38** but preferably comprise planing blades **38** having two or four or more components to accomplish the purpose of varying ski performance characteristics easily with a minimum of materials and cost.

The planing blade **38** components are preferably constructed of **365**A cast aluminum, but, like the seat **30** and strut **36**, can be constructed of a variety of other materials. Also, each embodiment of the front and rear blades **40**, **42** has a thickness sufficient to resist breaking or chipping when the ski **10** is used and when the blades **40**, **42** are accidentally dropped or mishandled when not in use. The thickness, however, need not be uniform along the entire dimension of the front and rear blades **40**, **42** and can range from about 1–20 mm. Each embodiment of the fuselage **44** similarly has a thickness sufficient to resist breaking or chipping when the ski **10** is used and when it is accidentally dropped or

mishandled when not in use. The thickness also need not be uniform along the entire dimension of the fuselage **44** and can range from about 1–50 mm.

Front Blade

Referring to FIGS. **6** and **9**, in the illustrated embodiment, the front blade **40** comprises an undulated hydrodynamically efficient member designed to provide lift and responsiveness characteristics to the ski **10**. This configuration further provides reduced resistance to water when compared to the front planing blade disclosed in the prior art.

The illustrated front blade **40** comprises an upper surface **112** having a central hill **114** with first and second valleys **116, 118** symmetrically arranged on opposing lateral sides of the hill **114**. The front blade **40** is symmetric about a plane of symmetry A', which corresponds to the plane of symmetry A defined by the strut **36**. The valleys **116, 118** terminate into stabilizing fins **120, 122** that extend downward and away from the seated rider. The fins **120, 122** may be angled toward the plane of symmetry A from front to back. The greatest perpendicular distance between the edge of the blade and the plane of symmetry A defined by the strut **36** corresponds to a distance b that is about 191 mm. The relatively large distance of the edge of the blade from the plane of symmetry A increases the moment created by water acting on the surface of the blade. A lower surface **124** is shaped generally as a mirror image of the upper surface **112**. The front blade **40** has a thickness that tapers from about 5–20 mm and preferably about 10–15 mm along the upper surface **112** of the central hill **114** to about 2–10 mm and preferably about 3–7 mm along the upper surface **112** of the valleys **116, 118** and fins **120, 122**.

The perimeter edges of the front blade **40** are advantageously tapered so that the upper and lower surfaces **112, 124** meet along a smooth rounded edge having a thickness of about 1–5 mm and preferably about 1–3 mm for improved hydrodynamic efficiency. Preferably, the surface area on the upper surface **112** of the front blade **40** is greater than the surface area on the lower surface **124**. With this design, the path that water follows over the front blade **40** is longer than the path that the water must follows beneath the front blade. Thus, the front blade **40** functions like the wing of a plane. The pressure exerted on the front blade **40** from above is lower than the pressure exerted on the front blade from below. The net result is lift.

The lateral pivot point of the front blade **40** advantageously runs along the longitudinal length of the top of the central hill **114**. Because the valleys **116, 118** define rising surfaces toward the central hill **114**, the pivot point provides mechanical advantage.

The front blade **40** has a nose **126** that extends from the central hill **114** in the longitudinal direction and is generally squared-off in the rear. Thus, the central hill **114** has a longitudinal length longer than that of valleys **116, 118** or fins **120, 122**. A longitudinal hill **114** length of about 200–250 mm, has been found suitable.

The fins **120, 122** are advantageously toed out toward the rear blade **42** at an angle of about 2–5° and preferably about 3°. This slight angle assists in catching and packing water toward the rear blade **42**. This increases the velocity of water past the rear blade **42** and enhances maneuverability.

Various other aspects of the shape of the front blade also provide significant advantages. Each of the valleys **116, 118** define generally planar upper and lower support surfaces **117, 119** respectively proximate the outer fins. Because the support surfaces are spaced downward from the portion of the front blade which mates with the fuselage, the length of the moment arm is increased. Similarly, the relatively large spacing of these surfaces from the plane of symmetry A of the strut **36** also increases the moment created by water acting on these surfaces.

Another important improvement is that the curved underside of the inner portion of the valleys directs water toward the plane of symmetry A defined by the strut **36**. This action greatly diminishes the force communicated to the spine of the rider when the rider lands from a jump. In particular, surfaces **113** and **115** on curved underside of the inner portion of the valleys direct the water toward the plane of symmetry A. Similarly, the lower outer support surfaces **119** are curved so as to direct the water somewhat away from the plane of symmetry A of the strut **36**, again reducing the force communicated to the rider. This is in stark contrast to a flat blade in which most of the force is directed upward upon reentry into the water after a jump. Importantly, the center portion of the blade along the axis of symmetry is thick enough to withstand any impact forces exerted on it and the blade continually tapers as it extends outward thereby reducing the weight of the blade.

The front blade is desirably between 46 and 137 square inches, is more desirably between 69 and 114 square inches and most desirably is between 82 and 101 square inches. If the blade is larger, the ski is very difficult to maneuver. If the blade is smaller, the blade does not sufficiently break the impact of the ski upon reentry into the water after a jump.

In another embodiment (not shown), the front blade **40** defines a generally planar member designed to increase stability characteristics. This configuration is generally similar to that disclosed in the prior art front blade but includes a taper along the perimeter edges of the front blade **40** so that the upper and lower surfaces meet along a smooth rounded edge having a thickness of about 1–5 mm and preferably about 1–3 mm.

Fuselage

Still referring to FIG. **6**, the fuselage **44** spaces apart the front and rear blades **40, 42** so that the blades **40, 42** can perform their intended functions. The fuselage **44** also assists in varying the performance characteristics of the ski **10**.

In the illustrated embodiment, the fuselage **44** comprises a streamlined hydrodynamically efficient member designed to provide lift and responsiveness characteristics to the ski **10**. This configuration also provides reduced resistance to water when compared to the fuselage disclosed in the prior art.

The fuselage **44** has a slightly twisted cylindrical-oval or serpentine shape with a longitudinal length of about 0.3-1 m and preferably about 0.6 m, a lateral width of about 10-30 mm and preferably about 20 mm, and a transverse height of about 25-45 mm and preferably about 35 mm. The front end **128** of the fuselage **44** tapers to a rounded point, with the upper surface **129** tapering more sharply than the lower surface **131**. The rear end **130** of the fuselage **44** also tapers to a rounded point, however, the upper surface tapers less sharply than the bottom surface.

A notch or cut-out **132** is formed on the lower surface **131** of the fuselage **44**, longitudinally aligned with the attachment point(s) to the rear blade **42**. The cut-out **132** is sized and configured to accept a wedge or shim **174** (FIGS. **14–16**) and is illustrated as having a generally elongated L-shape to accept a generally rectangular shim **174** with a varied thickness. The cut-out **132** and shim **174** cooperate to vary

of the attack angle of the rear blade **42** and thereby vary the performance characteristics of the ski **10**, as described below. The fuselage desirably has cast in stainless steel threads for receiving and retaining the bolts securing the blades **40**, **42** thereto.

In another embodiment (not shown), the fuselage comprises a generally linear tubular-oval member designed to provide stability characteristics to the ski. The fuselage has a longitudinal length, a lateral width, and a transverse height similar to the previous embodiment. Both the front and rear ends of the fuselage symmetrically taper to a smooth rounded point.

Rear Blade

Referring to FIGS. **6** and **10**, in the illustrated embodiment, the rear blade **42** defines a generally planar member **150** designed to provide stability characteristics to the ski **10**. This configuration is generally similar to that disclosed in the prior art rear blade but further includes a taper along the perimeter edges so that the upper and lower surfaces **136**, **148** meet along a smooth edge having a thickness of about 1–5 mm and preferably about 1–3 mm. Preferably, the rear blade **42** is designed such that the surface area on the lower surface **148** is greater than the surface area on the upper surface **136**. More specifically, the lower surface **148** of the generally planar member **150** is curved while the upper surface **136** is flat. With this design, the path that water follows over the rear blade **42** is shorter than the path that the water must follows beneath the rear blade. Thus, the rear blade **42** functions like an inverted wing of a plane. The pressure exerted on the rear blade **42** from above is higher than the pressure exerted on the rear blade from below. The result is that the rear blade **42** is forced downward. At the same time, the front blade **40** is being force upward. The combination of opposing forces on the front and rear blades **40**, **42** makes the ski **10** especially suitable for jumping.

Stabilizing fins **152**, **154** are symmetrically spaced about 70-90 mm from the longitudinal centerline of the rear blade **42** that is defined by the intersection of the rear blade and the plane of symmetry A. These fins **152**, **154** have a transverse height of about 20 to 40 mm that tapers into the lower surface **148** of the rear blade **42** in the longitudinal direction. The rear blade **42** is desirably between 15 and 44 square inches, is more desirably between 22 and 37 square inches and most desirably is between 26 and 32 square inches.

When the generally planar surface **150** of the rear blade **42** operates together with the elliptical planing surface of the front blade **40**, these surfaces battle and counteract each other, providing the desired stability characteristics. Specifically, these surfaces resist the turning of the ski from side-to-side or up and down, which is very desirable for beginners.

In another embodiment, illustrated in FIGS. **7** and **11**, the rear blade **42** defines a curved hydrodynamically efficient member designed to provide lift and responsiveness characteristics to the ski **10**. Significantly, elliptical planing surface of the curved rear blade **42** cooperates with the elliptical planing surface of the front blade **40** greatly enhancing responsiveness. In addition, the curved planing surface of the curved rear blade **42** significantly reduces the amount of impact felt by a rider when reentering the water after a jump. The curved underside of the rear blade **42** directs the water away from the plane of symmetry A. Directing the water away from the plane of symmetry A diminishes the force communicated to the spine of the rider when the rider lands from a jump.

The rear blade **42** includes an upper surface **136** having a central valley **138** with a pair of upswept wings **140**, **142** symmetrically arranged on opposing lateral sides of the valley **138**. The rear blade **42** is symmetric about a plane of symmetry A", which corresponds to the plane of symmetry A defined by the strut **36**. The upswept wings **140**, **142** extend transversely above and longitudinally beyond the valley **138**, and terminate as curved protuberances **144**, **146**. A valley **138** length of about 50–150 mm in the longitudinal direction has been found suitable.

The lower surface **148** is configured generally as a mirror image of the upper surface **136**. Surfaces **145**, **147** on the curved underside of the upswept wings **140**, **142** direct the water away from the plane of symmetry A upon landing of the rear blade **42** on the water.

The rear blade **42** is desirably between 10 and 30 square inches, is more desirably between 15 and 25 square inches and most desirably is between 18 and 22 square inches.

The rear blade **42** has a thickness that tapers from about 5–15 mm and preferably about 10–15 mm.

The perimeter edges of the rear blade **42** are tapered so that the upper and lower surfaces **136**, **148** meet along a smooth edge having a thickness of about 1–5 mm and preferably about 1–3 mm. Preferably, the rear blade **42** is designed such that the surface area on the lower surface **148** is greater than the surface area on the upper surface **136**. More specifically, the lower surface **148** of the rear blade **42** curves toward the perimeter edges while the upper surface **136** is not curved toward the perimeter edges as seen from a cross-section of the rear blade **42** taken parallel to the plane of symmetry A". With this design, the path that water follows over the rear blade **42** is shorter than the path that the water must follows beneath the rear blade. Thus, the rear blade **42** functions like an inverted wing of a plane and is forced downward as water flows past the blade. This downward force in conjunction with the upward force imposed on the front blade **40** makes the ski **10** especially suitable for jumping.

Foot Holder

Referring to FIGS. **12** and **13**, a pair of foot holders **32**, **34** are shown attached to the upper face **22** of the board **20** near its front end **26**. Each foot holder **32**, **34** has a similar size and configuration to house and secure a respective rider's foot. Alternatively, one holder sized and configured to house both rider's feet could also be used although this is less preferred because a relatively wide base assists the rider in controlling and acting on the ski **10**. Secure housing of the rider's feet is desired so the rider can precisely act on and control the ski **10** (e.g. by pushing or pulling on the board via his or her feet) and thereby maneuver the ski **10**.

The illustrated foot holders **32**, **34** are preferably identical for ease of manufacture and assembly and only the exploded foot holder **32** is detailed for descriptive convenience, although it is understood that the other footholder **34** is constructed, assembled and operates in a similar manner as the below-described foot holder **32**. The foot holder **32** has an orthopedic foot bed **156** configured similar to the bottom of a person's foot to provide rider comfort and help secure the rider's foot within the foot holder **32**. The foot bed **156** is sized to accommodate a variety of human riders, whether the riders are adults or children, and irrespective of the proportions or size of the rider. The foot bed **156** is preferably constructed of a soft, resilient, water-resistant material such as foams, gels, neoprene, silicon and the like or combinations thereof. The foot bed **156** may also have a slip

resistant surface and/or be ridged or scalloped (not shown) to further inhibit movement of the rider's foot relative to the foot bed **156**.

A binding **158** extends laterally across the foot bed **156** with a dome-like transverse height sufficient to accept and house the rider's foot thereunder. Like the foot bed **156**, the binding **158** is preferably constructed of a soft, resilient water-resistant material and may also have a slip resistant surface and/or be ridged or scalloped. Additional binding layers can also be incorporated into the foot holders **32** for any of a variety of a particular purposes, such a using a foam inset layer **160** closest to the rider's foot for additional rider comfort.

A heel strap **162** further inhibits the rider's foot from sliding out the rear of the foot holder **32**. The heel strap **162** is advantageously moveable relative to the foot bed **156** and/or binding **158** to accommodate a variety of foot sizes and shapes. This moveable feature can be achieved in a variety of ways. For example and as illustrated, the heel strap **162** can comprise a resilient material, such as neoprene, rubber or silicon. For another example, the heel strap **162** can use Velcro hook and loop fasteners to interconnect opposing portions of the heel strap.

An ankle leash **164** is connected to the foot holder **32** to prevent to the rider's foot from significantly separating from the foot holder **32**. The leash **164** comprises an elongated flexible material with sufficient length to circumnavigate the rider's ankle. The ankle leash **164** length is advantageously adjustable to accommodate various ankle sizes and thickness and to allow a variety of separation distances between the rider's foot and the foot holder **32, 34** before the ankle leash **164** engages. The leash **164** also has a conventional quick-release buckle **166** for easy engagement and disengagement. The illustrated leash **164** has first and second ends that interconnect via the buckle **166**.

A pair of elongated brackets **165, 167** having an inverted ledge are positioned along opposing lateral sides of the footholder **32**. At least a portion of the binding **158**, insert layer **160**, heel strap **162**, and ankle leash **164** are all secured under the bracket ledges **165, 167** to form the footholder **32**, as further described below.

ASSEMBLY

As noted above, the flying ski **10** is advantageously constructed from several separately manufactured components for ease of manufacture. Some of the component parts may be assembled by the manufacturer, particularly those designed for permanent or semi-permanent attachment to other components. Permanent or semi-permanent attachment by the manufacturer is advantageous when there is little likelihood that the components will be detached and thus the manufacturer can help assure that the components are properly assembled.

Other components of the ski are advantageously removably attached to each other and/or specifically designed for repeated quick and easy attachment and detachment. This removable feature allows the ski to be disassembled into component parts when not in use and more easily carried.

Although some of the components are advantageously permanently, semi-permanently or removably attached, any and all of the components can be permanently, semi-permanently or removably attached to each other. Moreover, any and all of the components can be formed as a larger unitary member.

Referring to FIG. **2**, the seat **30** is preferably permanently mounted to the board **20** by four allen bolts **168** and washers **169** placed on opposing corners of the base portion **46** of the seat **30** and plugs. However, the seat **30** can be permanently, semi-permanently or removably attached to the board **20** by other suitable means, such as screws, nails, clamps, clips, fasteners, adhesives, magnets, Velcro and the like or combinations thereof.

The foot holders **32, 34** are preferably connected to the board **20** by three screws **170** on one side of the foot holder **32, 34** and three screws **170** on the opposite side of the foot holder **32, 34**. Like the seat **30**, the foot holders **32, 34** can be attached to the board **20** by a variety of other suitable fastening devices. The illustrated footbed **156** is preferably separately attached to the board **20** by an adhesive glue, although there is no requirement for separate attachment or use of glue.

Referring to FIGS. **3, 4**, and **5**, the strut **36** connects to the seat **30** through the internal passageway **94** and advantageously can be repeatedly connected and disconnected in a quick and easy manner so that these two components **30, 36** can be detached and easily carried when the ski **10** is not in use. Specifically, the bolt **64** that extends from the tongue **106** of the strut **36** is advanced through the keyway groove **96** in the strut **36** and into the Y-junction site **62** of the seat **30**. The Morris taper and outwardly extending ears **108, 110** of the tongue **106** form-fit into the keyway groove **96**. The threaded turn knob **172** is then attached to the bolt **64** to secure the strut **36** to the seat **30**. This configuration provides for quick and easy repeated connection and disconnection of these components **30, 36**. That is, to connect the strut **36** to the seat **30**, a person merely places the board **20** (with seat **30** attached thereto) over the strut **36**, aligns the passageway **94** and the tongue **106**, then lowers the passageway **94** onto and through the tongue **106** (or vice-versa) so that the bolt **64** extends into the Y-junction site **62**, and then attaches the turn knob **172** to the exposed bolt **64**. Similarly, to disconnect the strut **36** from the seat **30**, a person merely detaches the turn knob **172** from the exposed bolt **64** and then removes the tongue **106** from the passageway **94**. The opposing end of the strut **36** is preferably formed in unity with the fuselage **44**, however, as explained above, this connection can be provided by other permanent, semi-permanent or removable configurations.

Referring back to FIG. **2**, the front and rear planing blades **40, 42** are attached to the fuselage **44**. Although a variety of attachment devices can be used, the particular device used preferably does not alter the performance characteristics of the particular planing blade components **40, 42, 44** coupled thereto. The illustrated embodiment shows the front planing blade **40** attached to the top of the fuselage **44** by three bolts **168** laterally centered along internal stainless steel insets cast into the fuselage and corresponding to the attachment location of the central hill **114** of the planing blade and extending in the longitudinal direction. The illustrated embodiment shows the rear planing blade **42** attached to the bottom of the fuselage **44** by two bolts **170** laterally centered along internal stainless steel inset threads cast into the central fuselage and received in countersunk holes in the valley **138** of the planing blade and extending in the longitudinal direction.

ALTERING PERFORMANCE CHARACTERISTICS OF THE SKI

As noted above, one of the improvements of the flying ski **10** of the present invention relates to a method and system for altering the performance characteristics of the ski **10**. That is, the improved flying ski **10** can be readily adapted for

use with beginning and intermediate riders such that the ski provides a substantially stable, steady ride while being relatively unresponsive to rider actions (such as swaying from side to side). In this mode, ski responsiveness is generally analogous to a conventional jet ski. The improved flying ski **10** can also be readily adapted for use with advanced riders such that the ski provides a generally stable ride while promptly responding to rider actions. In this mode, ski responsiveness is generally analogous to a conventional water ski. The improved flying ski **10** can further be readily adapted for use with professional riders such that the ski provides an action-packed extremely responsive ride while immediately responding to rider actions and being capable of such maneuvers as jumping up to about 10 m in the air or performing a series of continuous somersaults.

A variety of methods can be used to alter the performance characteristics of the flying ski **10**, such as shortening the distance between the planing blades or increasing the size differential between the planing blades (a smaller rear blade will enhance performance). Preferably, however, it has been found that varying the hydrodynamic configuration of the planing blade **38** and varying the attack angle of the planing blade **38** provides a suitable range of performance characteristics while requiring few additional components or modifications to the overall flying ski **10**. More specifically, it has been found that selectively using a rear planing blade **42** with either a generally planar member **150** (FIGS. **6** and **10**), a curved member with rearwardly extending upswept wings **140**, **142** (FIGS. **7** and **11**), or a curved member with frontwardly extending upswept wings **196**, **198** (FIGS. **8** and **11**), and/or varying the attack angle of the rear planing blade **38** by placing a shim **174** between the rear blade **38** and the fuselage **44**, allows the ski **10** to provide sufficiently varied performance characteristics so as to be enjoyed by beginning, intermediate, advanced and professional riders, as described below. While the disclosed blades are strongly preferred, the planing blade **38** could have a variety of other shapes. Similarly, the attack angle could be varied in other ways, such as by an adjustment screw. Moreover, methods and systems other than by selectively using a rear planing blade **42** with either a generally planar member **150**, a curved member with upswept wings **140**, **142**, or a curved member with frontswept wings **196**, **198** and/or varying the attack angle of the rear planing blade **38** by placing a shim **174** between the rear blade **38** and the fuselage **44** can be used to alter the performance characteristics of the flying ski **10**. However, the disclosed shim arrangement is preferred in that it provides strength, reliability, few parts and permits the blades to be adjusted without removal of the blade or shim, speeding adjustment and reducing the risk of lost parts. This is particularly important in a water setting.

Beginning and Intermediate Modes

Referring to FIGS. **6**A and **6**B, in beginning mode, the board **20**, seat **30**, foot holders **32**, **34**, fuselage **44** and undulated front planing blade **40** are attached as described above. The rear planing blade **42** having the generally planar member **150** is similarly attached to the fuselage as described above. When so configured, the ski **10** provides a significantly stable, steady boat-like ride that is relatively dampened response to rider actions.

Referring to FIG. **17**A, as the rider's skills increase, the generally planar rear blade **150** can be detached from the fuselage **44** and a first blade position support or shim **174** (FIG. **14**) placed within the cut-out **132** of the fuselage **44** and between the rear planing blade **42** and the fuselage **44**. The first shim **174** is sized and configured to be accepted into the cut-out **132** and is shaped in continuity with the fuselage **44**. The first shim **174** has an elongated oval opening **172** that extends along the shim **174** in the longitudinal direction through which the fastener (e.g. screw **170**) that couples the fuselage **44** to the rear blade **42** can extend and the shim **174** sandwiched therebetween. Accordingly, the fasteners function to secure both the rear blade **42** and the blade support **174** in a fixed position. The first shim **174** has a longitudinal length of about 30–70 mm, a lateral width that varies from about 20–30 mm at one end **176** of the shim to a lateral width of about 15–25 mm at the opposite side **178** of the shim **174**, and a transverse height that varies linearly from about 0.5–1 mm at one end **176** of the shim **174** to a thickness of about 1–3 mm at the opposite end **178** of the shim **174**. So positioned, the first shim **174** increases the attack angle of the rear blade **42** about 0.5°. An increased attack angle increase the downward force on the rear blade **42**, which, in turn, provides increased performance characteristics.

Referring to FIG. **17**B, as the rider's skills further increase, the generally planar rear blade **150** can be again detached from the fuselage **44** and the first shim **174** moved out of or along the cut-out **132** and advanced in the longitudinal direction toward the rear of the fuselage **44**. The rear blade **150** can then be reattached to the fuselage **44**. Moving the first shim **174** toward the rear of the fuselage **44** further increases the attack angle greater than about 0.5°**0** which further provides increased performance characteristics and the first shim **174** can be repeatedly and incrementally moved in the longitudinal direction toward the rear of the passageway (e.g. FIG. **17**C) to vary the attack angle of the rear blade **42** from about 0.5° to about 10°.

As the rider's skills continue to increase, the generally planar rear blade **150** can be detached from the fuselage **44** and the first shim **174** replaced by a second blade support or positioning shim **184** (FIG. **15**) that is placed between the rear planing blade **42** and the fuselage **44**. Like the first shim **174**, the second shim **184** is sized and configured to be accepted into the cut-out **132** of the fuselage **44** and is shaped in continuity with the fuselage **44**. The second shim **184** has a longitudinal length and lateral width similar to the first shim **174** and a transverse height that varies from about 1–3 mm at one longitudinal end **186** of the shim **184** to a thickness of about 3–5 mm at the opposite longitudinal end **188** of the shim **184**. The second shim **188** increases the attack angle of the rear blade **42** to about 10° when arranged in within the cut-out **132**. However, like the first shim **174**, the second shim **184** can be repeatedly moved towards the rear of the fuselage **44** to further increase the attack angle of the rear blade **42** along a continuum of about 10°20°.

As the rider's skills still further increase, the generally planar rear blade **150** can be detached from the fuselage **44** and the second shim **184** replaced by a third blade positioning support or shim **190** (FIG. **16**) that is placed between the rear planing blade **42** and the fuselage **44**. Like the first and second shims, **174**, **184** the third shim **190** is sized and configured to be accepted into the cut-out **132** of the fuselage **44** and is shaped in continuity with the fuselage **44**. The third shim **190** has a longitudinal length and lateral width similar to the first and second shims **174**, **184** and a transverse height that varies from about 3–5 mm at one longitudinal end **192** of the shim **184** to a thickness of about 5–9 mm at the opposite longitudinal end **194** of the shim **184**. The third shim **190** increases the attack angle of the rear blade **42** to about 20° when arranged within the cut-out **132**. However, like the first and second shim **174**, **184**, the third shim **190** can be repeatedly moved towards the rear of the fuselage **44** to further increases the attack angle of the rear blade **42** along a continuum of about 20°–30°.

Advanced mode

Referring to FIGS. **7**A and **7**B, in advanced mode, the board **20**, seat **30**, foot holders **32**, **34**, fuselage **44**, and undulated front planing blade **40** are attached as described in connection with the beginning and intermediate modes. However, rather than using the rear planing blade **42** with the generally planar member **150**, the rear planing blade **42** with upswept wings **140**, **142** is used and attached to the fuselage **44** as described above. When so configured, the ski **10** provides a generally stable ride while promptly responding to rider actions. The rear planing blade **42** with upswept wings **140**, **142** enhances the hydrodynamic nature of the planing blade **38**, which, in turn, provides increased performance characteristics.

In the advanced mode, the blade assembly **38** has a longitudinal length d_1 that is larger than that of the configuration designed for professional riders. As shown in FIG. **7**B, the front blade **40** has a leading edge **193** and rear blade has a trailing edge **195** that correspond to the foremost front and rear edges of the planing blade **38**. The longitudinal length d_1 is the greatest perpendicular distance between the leading edge **193** and the trailing edge **195**. As the distance between the front edge **193** of the front blade and the rear edge **195** of the rear blade is increased, there is a longer effective moment arm and thus, a larger moment generated by the resistance of the water on the blades.

As the rider skills increase, and in a similar manner as described in connection with the beginning and intermediate modes, a series of shims **174**, **184**, **190** (FIGS. **14**–**16**) can be used to modify the attack angle of the rear planing blade **42** and thereby further increase the performance characteristics of the ski **10**.

Professional Mode

Referring to FIGS. **8**A and **8**B, in professional mode, the board **20**, seat **30**, foot holders **32**, **34**, fuselage **44**, and undulated front planing blade **40** are attached as described in connection with the beginning, intermediate and advanced modes. Like the advanced mode, the rear planing blade **42** with upswept wings **140**, **142** is used rather than the rear planing blade **42** with the generally planar member **150**. However, the rear planing blade **42** with upswept wings **140**, **142** is rotated 180° to form a rear planing blade **42** with frontswept wings **196**, **198** that is attached to the fuselage **44** as described above. The frontswept wings **196**, **198** act like canards. When so configured, the ski **10** provides an action-packed ride while immediately responding to rider actions. The rear planing blade **42** with frontswept wings **196**, **198** significantly enhances the hydrodynamic nature of the planing blade **38**, which, in turn, provides increased performance characteristics.

In the professional mode, the blade assembly **38** has a longitudinal length d_2 that is shorter than the longitudinal length d_1 used in the advanced mode where the upswept wings **140**, **142** are employed. As above, the longitudinal length d_2 is defined as the greatest perpendicular distance between the leading edge **193** and the trailing edge **195**.

As the rider skills increase, and in a similar manner as described in connection with the beginning, intermediate and advanced modes, the series of shims **174**, **184**, **190** (FIGS. **14**–**16**) can be used to modify the attack angle of the rear planing blade **38** and thereby further increase the performance characteristics of the ski **10**. It has been observed that thicker wedges that provide an increased attack angle are desirable to vary ski performance when the frontswept wings **196**, **198** are used because the frontswept wings **196**, **198** are closer to the front blade **40**, which decreases the mechanical leverage of the overall planing blade **38**. That is, in the professional mode, the distance between the front edge **193** of the front blade **40** and the rear edge **195** of the rear blade **42** is reduced, so there is a shorter effective moment arm and thus, a smaller moment generated by the resistance of the water on the blades. The rear blade **42** also has a fixed angle of attack which pulls the rear of the fuselage downward. In the professional mode, this angle of attack is greater to compensate for the decreased effective movement arm of the rear blade.

Use of a limited number of shims to vary the angle of attack to less than about 30° is preferred in order to reduce the number of component parts used in connection with the ski **10** and because this particular system embodiment provides a sufficient continuum of varied performance characteristics to satisfy beginner, intermediate, advanced and professional riders. Similarly, the disclosed device is preferred in that only two types of rear planing blades **38** can be used to vary the hydrodynamic nature of the ski **10** for use with beginner, intermediate, advanced and professional riders.

SKI MAINTENANCE

It has been observed that when the planing blade **38**, strut **36** and seat **30** are constructed from the preferred aluminum material, this material tends to tarnish and lose its original smooth, shiny finish. The smooth finish is preferred, particularly in connection with the submerged planing blade **38** and strut **36**, because it decreases water resistance and otherwise improves ski performance.

A variety of techniques can be used to maintain the preferred smooth, shiny surface. For example, conventional metal cleaners, such as MOTHER'S magnesium and aluminum polish, are suitable for this purpose when the manufacture's directions are followed. Importantly, however, the performance of the cast strut and blades is greatly enhanced if the polished surface is also sealed. Conventional aluminum sealants are suitable for this purpose when applied to the components **30**, **36**, **38** as follows. First, the sealant is applied by a rag or towel and allowed to turn generally cloudy. After about 1–3 minutes, the sealant is wiped off. Through this application procedure, the sealant has been found to inhibit tarnishing for up to about 1 month.

Although this invention has been described in terms of a certain preferred embodiment and suggested possible modifications thereto, other embodiments and modifications apparent to those of ordinary skill in the art are also within the scope of this invention. It is also understood that various aspects of one or several embodiments or components can be used in connection with another or several embodiments or components. Accordingly, the scope of the invention is intended to be defined only by the claims that follow.

What is claimed is:

1. A recreational device that supports a seated human rider while the rider and the device are towed behind a powered watercraft, comprising:

an elongated board having a front end and a back end;

a seat extending from the board for supporting the buttocks of the seated rider at a position spaced above the board;

a strut depending from one of the board and the seat, said strut defining a plane of symmetry;

a blade assembly secured to the strut, the blade assembly having a front blade and a rear blade connected by a fuselage,

wherein said front blade includes a first portion defining a first surface on a first side of said plane of symmetry and a second portion defining a second surface on a second side of said plane of symmetry, and

wherein said rear blade includes a first portion defining a first surface on a first side of said plane of symmetry and a second portion defining a second surface on a second side of said plane of symmetry, said first surface and said second surface directing water away from said plane of symmetry upon landing of said rear blade on water

wherein said device is configured such that said entire rear blade is normally completely submerged beneath the surface of the water when the device is in contact with the water and being towed behind a watercraft.

2. The recreational device of claim **2**, wherein said rear blade comprises a pair of upswept wings defining a central valley therebetween, said upswept wings symmetric about said plane of symmetry.

3. The recreational device of claim **2**, wherein said pair of upswept wings are forward sweeping.

4. The recreational device of claim **2**, wherein said pair of upswept wings are rearward sweeping.

5. The recreational device of claim **2**, wherein said rear blade comprises between about 10 to 30 square inches of surface area.

6. The recreational device of claim **5**, wherein said rear blade comprises between about 15 to 25 square inches of surface area.

7. The recreational device of claim **6**, wherein said rear blade comprises between about 18 to 22 square inches of surface area.

8. The recreational device of claim **2**, wherein said central valley has a length between about 50 to 150 millimeters from front to back.

9. The recreational device of claim **8**, wherein said rear blade has a thickness between about 5 to 15 millimeters.

* * * * *