US006729495B2

(12) **United States Patent**
Gardiner

(10) **Patent No.: US 6,729,495 B2**
(45) **Date of Patent: *May 4, 2004**

(54) **BEVERAGE CONTAINER**

(75) Inventor: **James Lee Gardiner**, North Mission Beach (AU)

(73) Assignee: **Crown Cork & Seal Technologies Corporation**, Alsip, IL (US)

(*) Notice: Subject to any disclaimer, the term of this patent is extended or adjusted under 35 U.S.C. 154(b) by 65 days.

This patent is subject to a terminal disclaimer.

(21) Appl. No.: **10/095,203**

(22) Filed: **Mar. 11, 2002**

(65) **Prior Publication Data**

US 2002/0134787 A1 Sep. 26, 2002

Related U.S. Application Data

(63) Continuation of application No. 09/530,927, filed as application No. PCT/AU98/00946 on Nov. 12, 1998, now Pat. No. 6,425,493.

(30) **Foreign Application Priority Data**

Nov. 12, 1997	(AU)	PP0330
Dec. 9, 1997	(AU)	PP0804
Mar. 10, 1998	(AU)	PP2249
Oct. 19, 1998	(AU)	PP6558

(51) **Int. Cl.**[7] **B65D 1/16**; B65D 8/00; B65D 17/00

(52) **U.S. Cl.** **220/733**; 220/906; 220/646

(58) **Field of Search** 220/733, 269, 220/906, 646, 655, 797, 698, 640, 641, 642, 648

(56) **References Cited**

U.S. PATENT DOCUMENTS

3,704,805	A	12/1972	Sheafe, III	220/906
5,244,111	A	9/1993	Merom	220/906
5,497,896	A	3/1996	Shand	220/269
5,501,362	A	3/1996	Cudzik	220/612
5,645,190	A	7/1997	Goldberg	220/674
5,655,678	A	8/1997	Kobayashi	220/269
5,715,964	A	2/1998	Turner et al.	220/269
5,813,561	A	9/1998	Chang et al.	220/269
5,967,363	A	10/1999	Allen	220/806
6,425,493	B1	7/2002	Gardiner	220/733

FOREIGN PATENT DOCUMENTS

DE	2 318 669	11/1974
DE	32 22 894	1/1984
DE	195 24 427	1/1996
EP	0 165 639	12/1985
JP	4-311450	11/1992
JP	09-058681	3/1997

Primary Examiner—Nathan J. Newhouse
(74) *Attorney, Agent, or Firm*—Woodcock Washburn LLP

(57) **ABSTRACT**

A beverage can cap member **(16, 100)** is configured so that its exterior surface **(28)** extending radially inwardly from the rim **(18)** or rim forming portion **(140)** is substantially flat or continuous, or has a slight curve from apposition adjacent from the rim **(18)** or rim forming portion **(140)**. The cap member **(16, 100)** may have a countersink **(160)** which is filled with a filler material including a curable adhesive, an insert **(180)** of a natural or synthetic material or the like. The filler material increases the structural strength of the cap member **(16, 100)** to an extent that it can be made of a relatively thinner material and still complies with the minimum peaking pressure of the industrial standard.

18 Claims, 12 Drawing Sheets

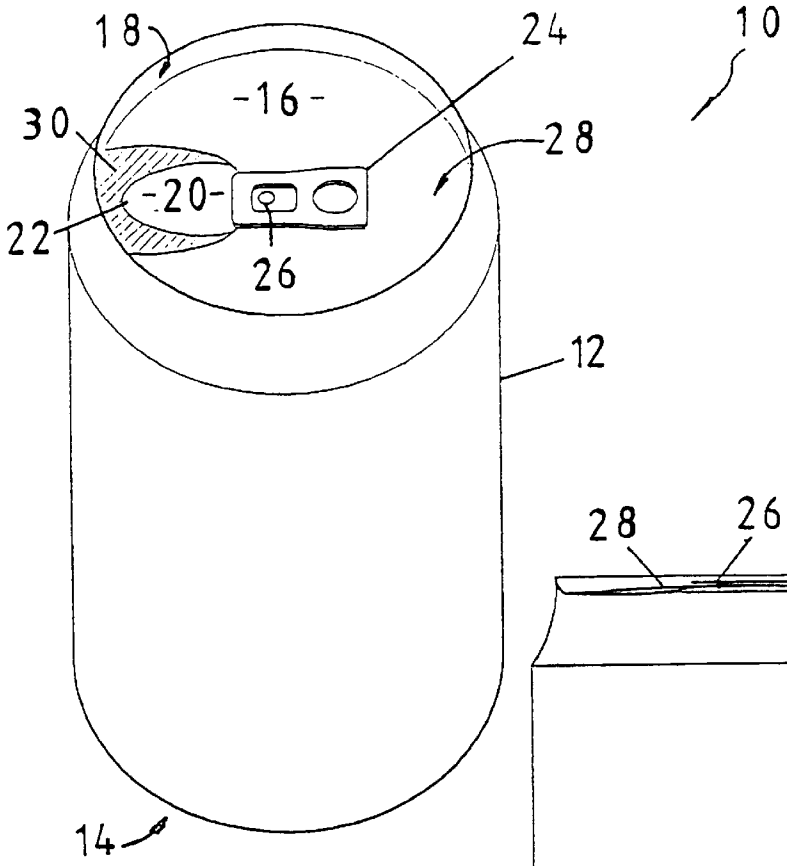

FIG. 1

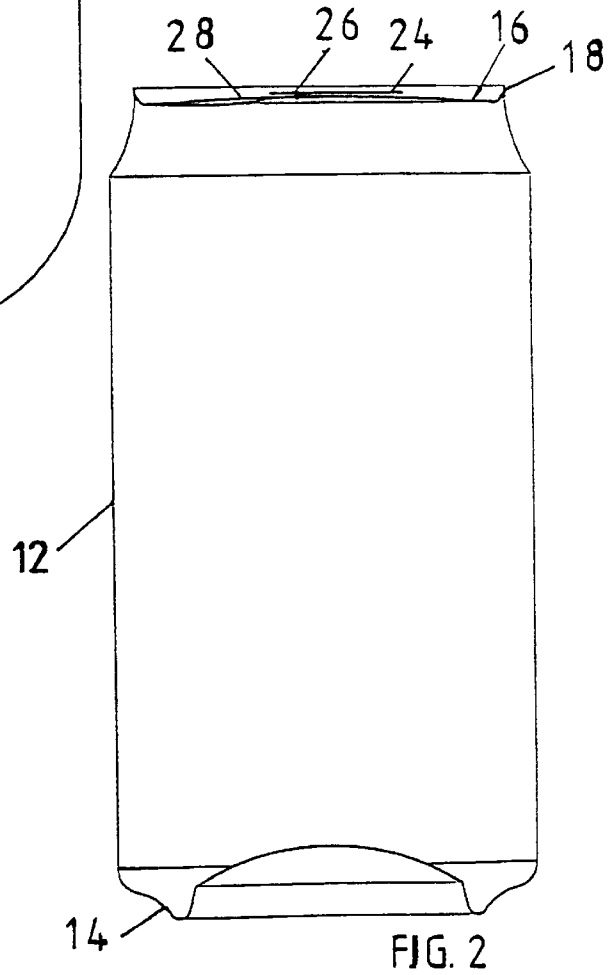

FIG. 2

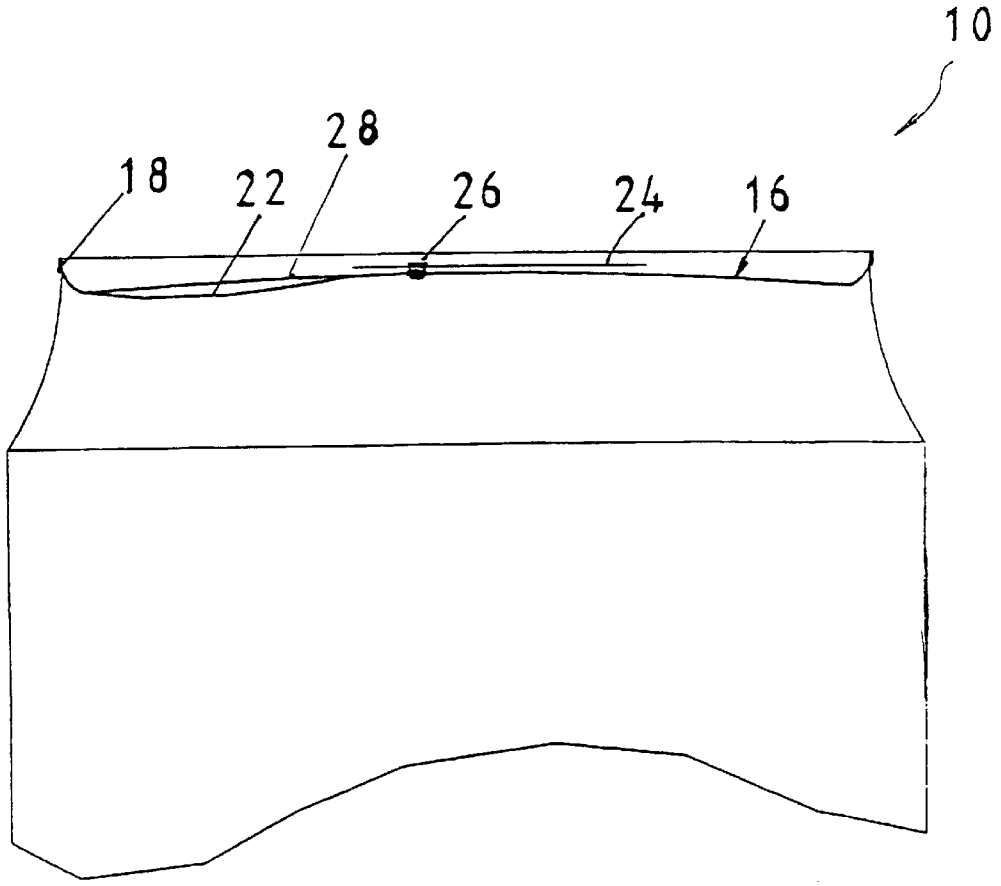

FIG. 3

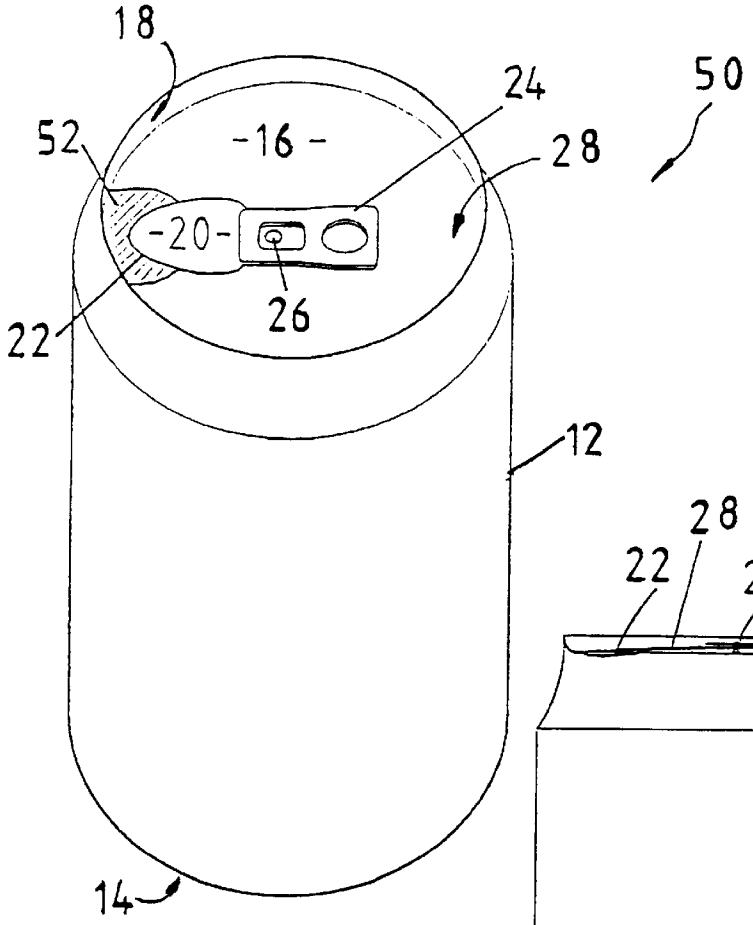

FIG. 4

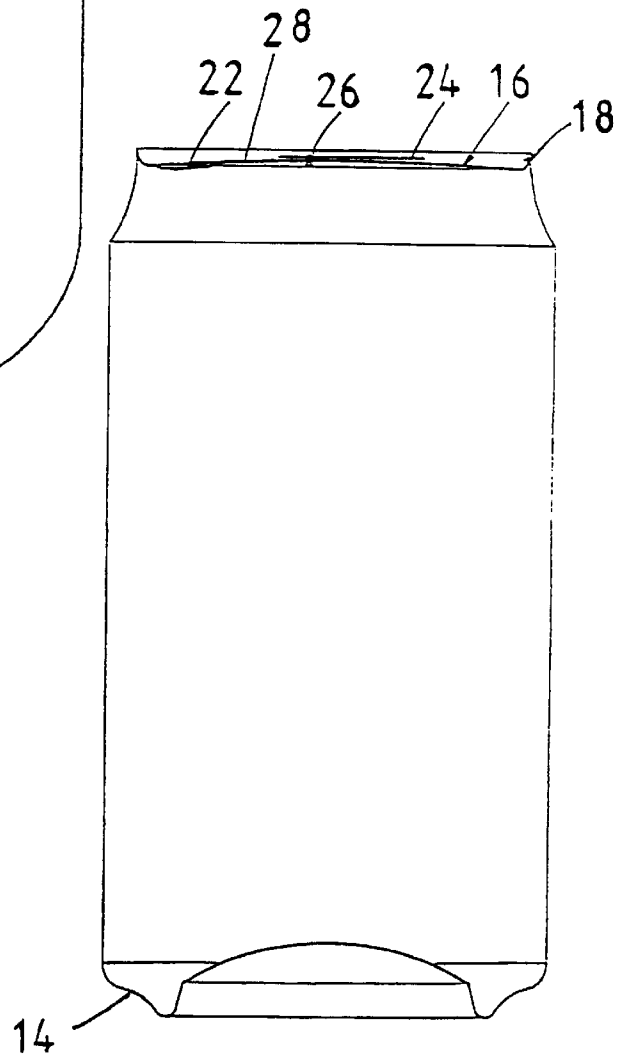

FIG. 5

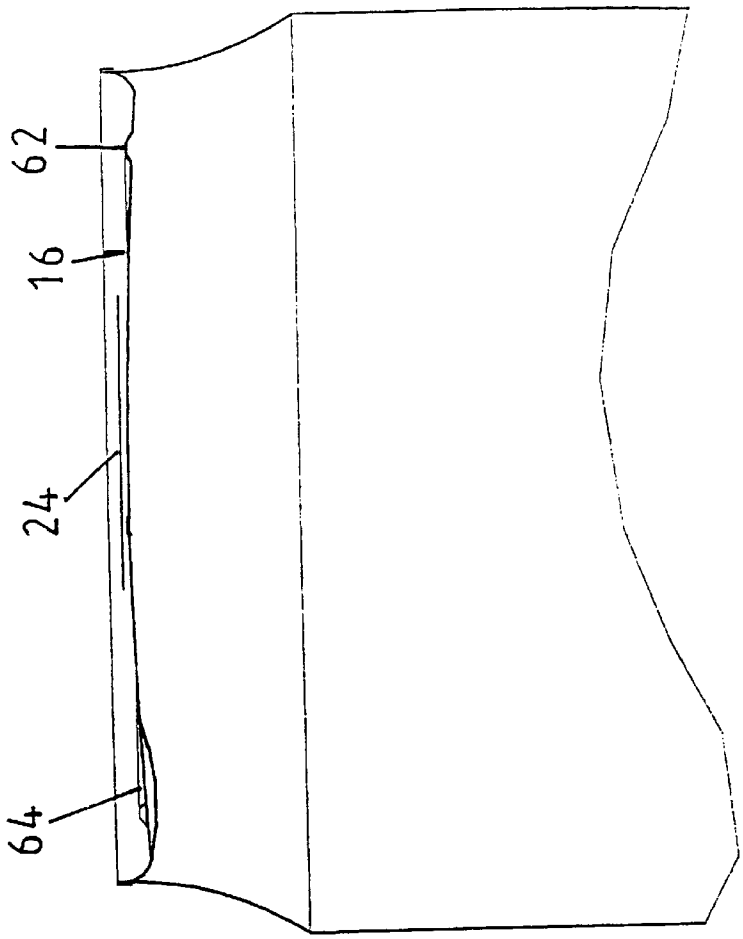

FIG. 7

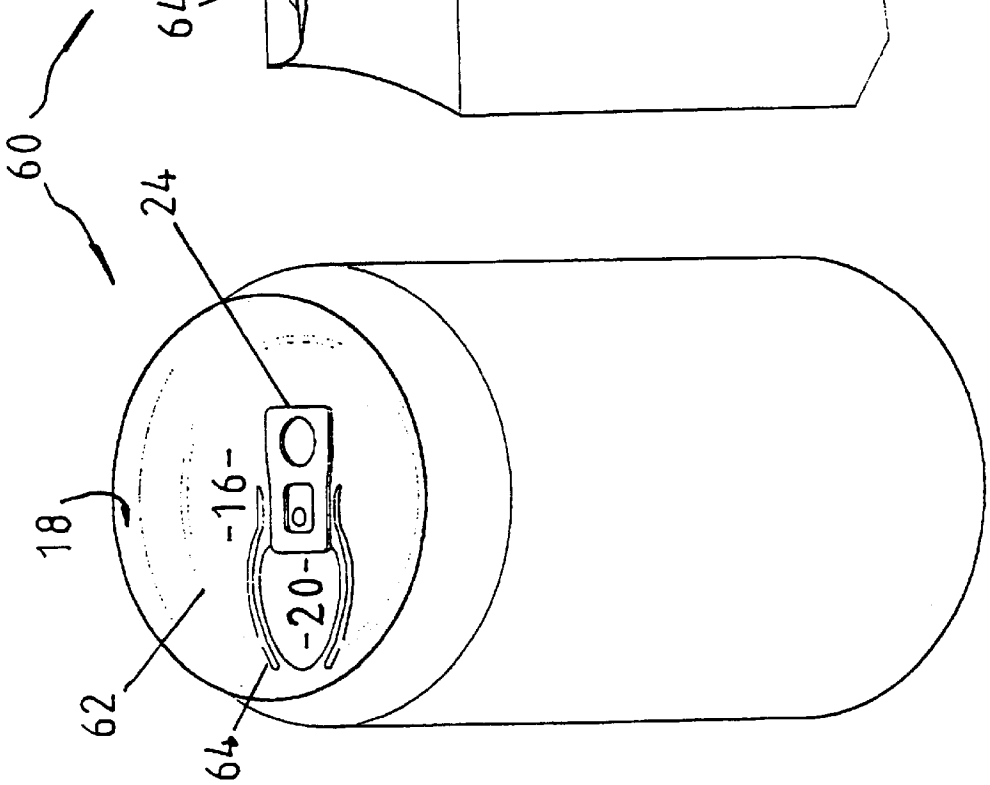

FIG. 6

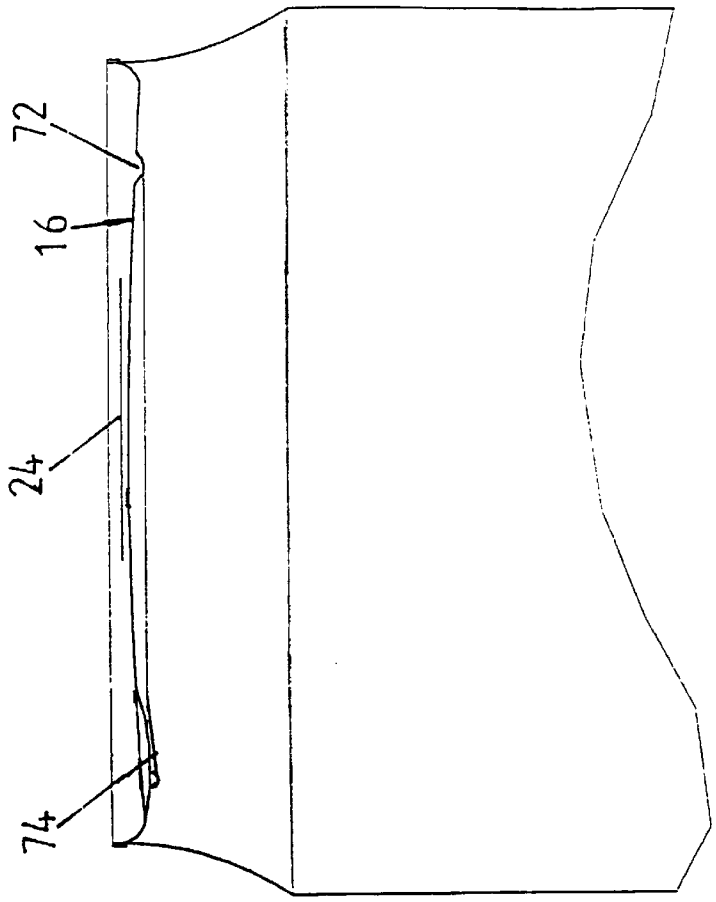

FIG. 9

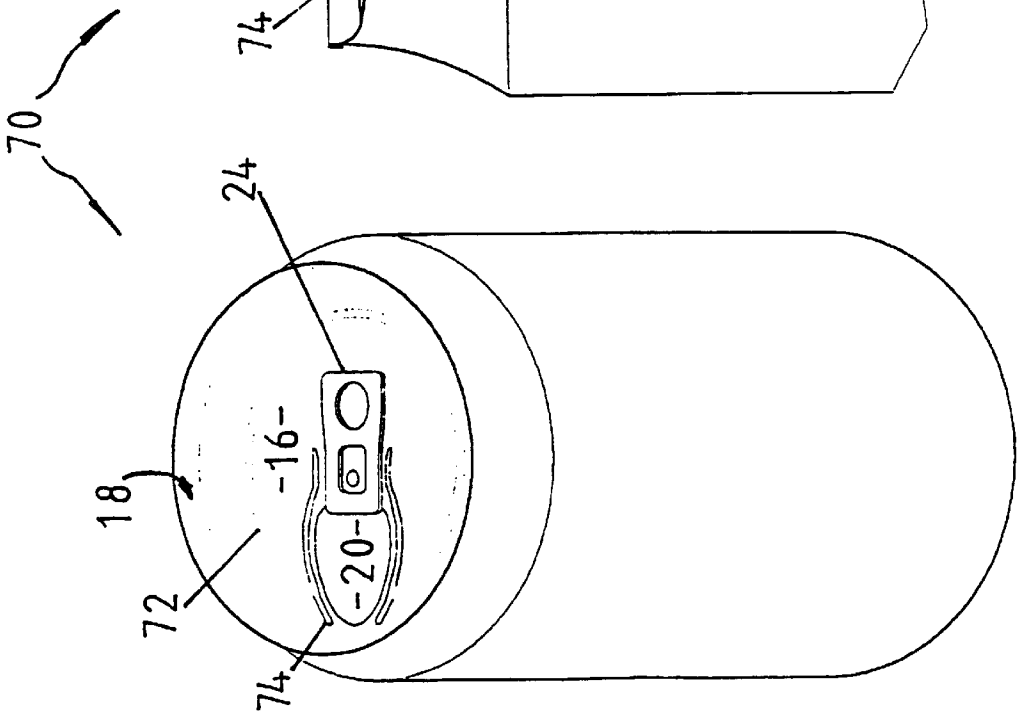

FIG. 8

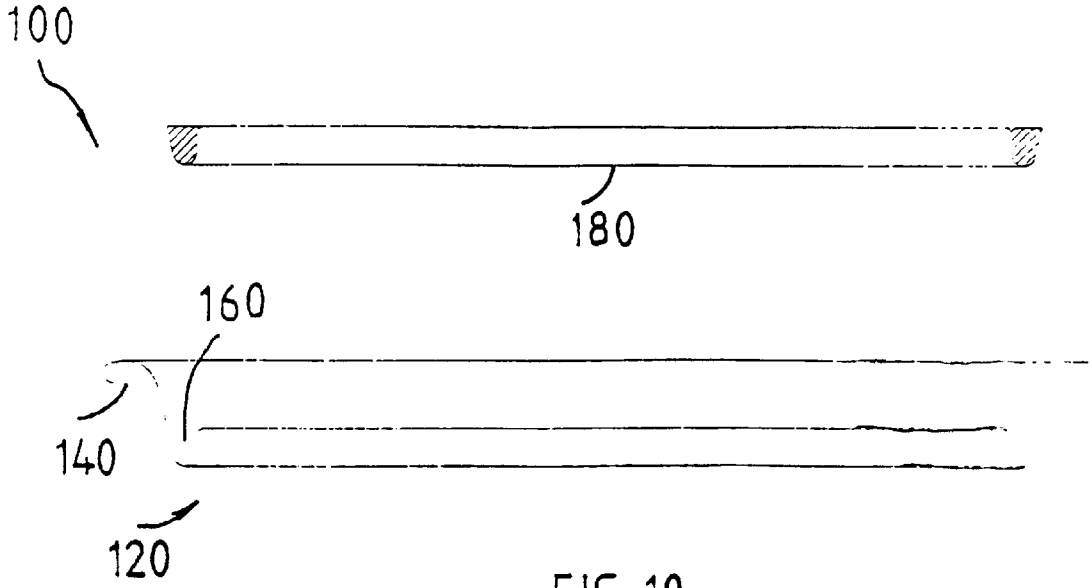

FIG. 10

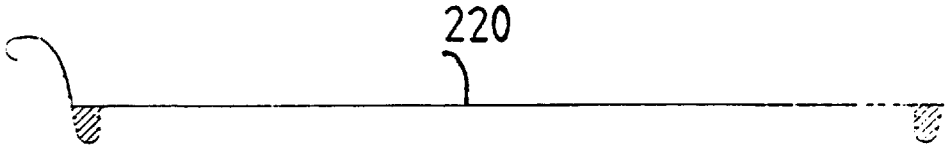

FIG. 11

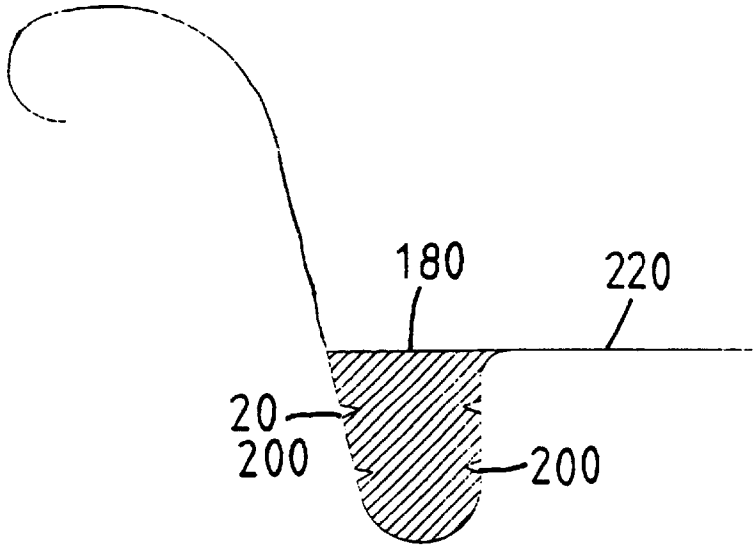

FIG. 12

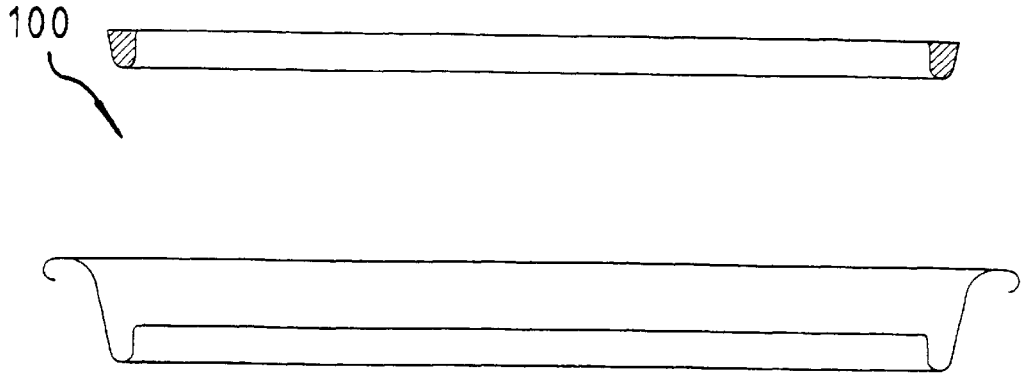

FIG. 13

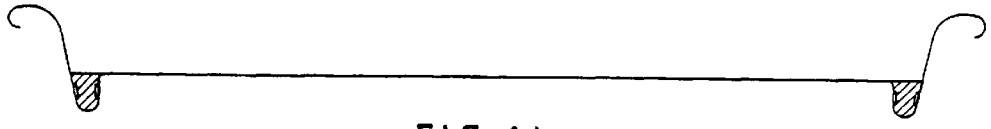

FIG. 14

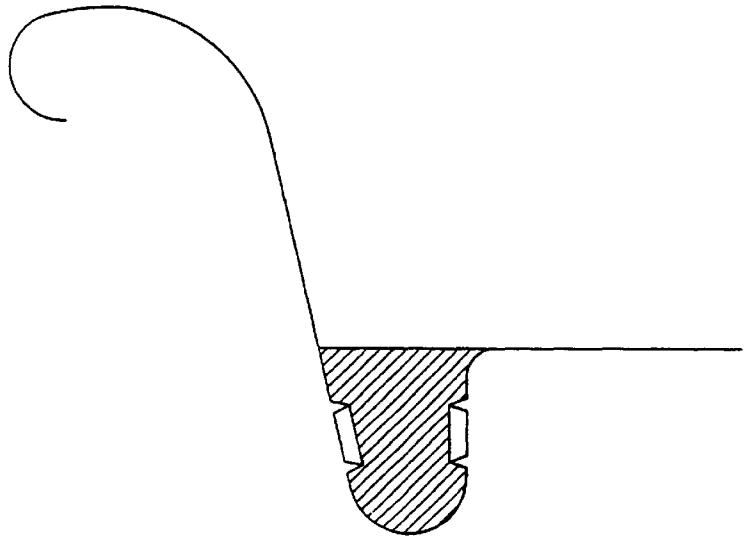

FIG. 15

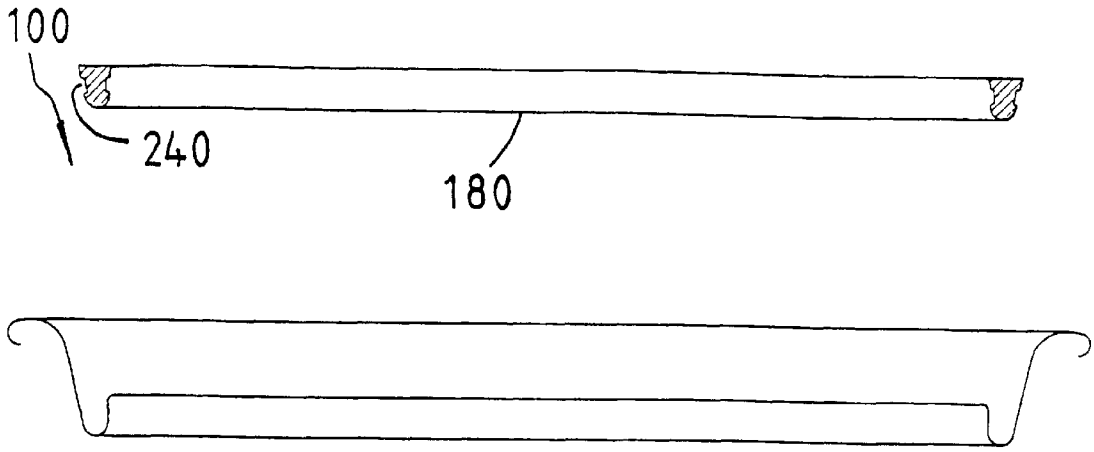

FIG. 16

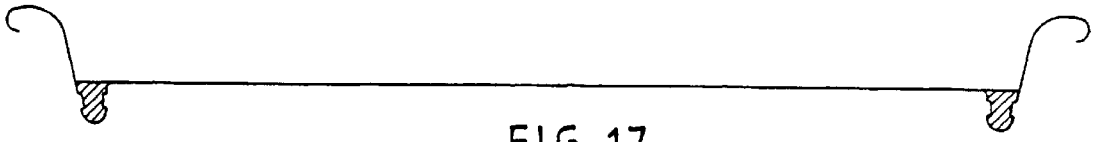

FIG. 17

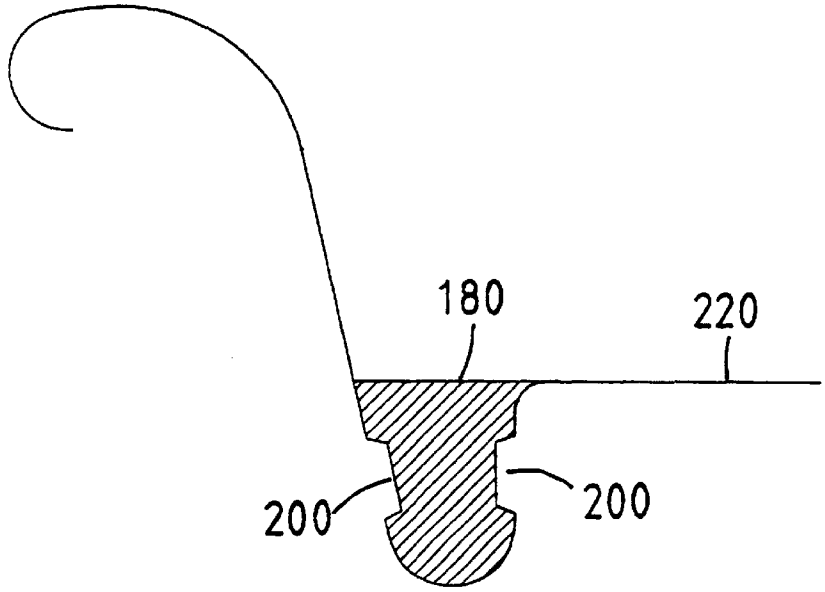

FIG. 18

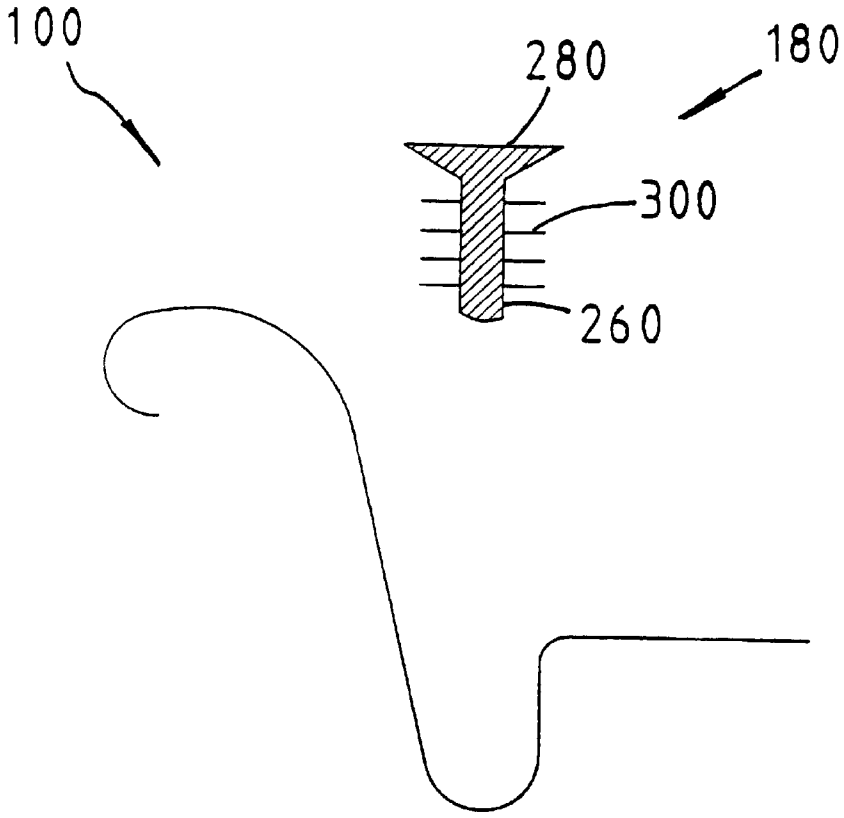

FIG. 19

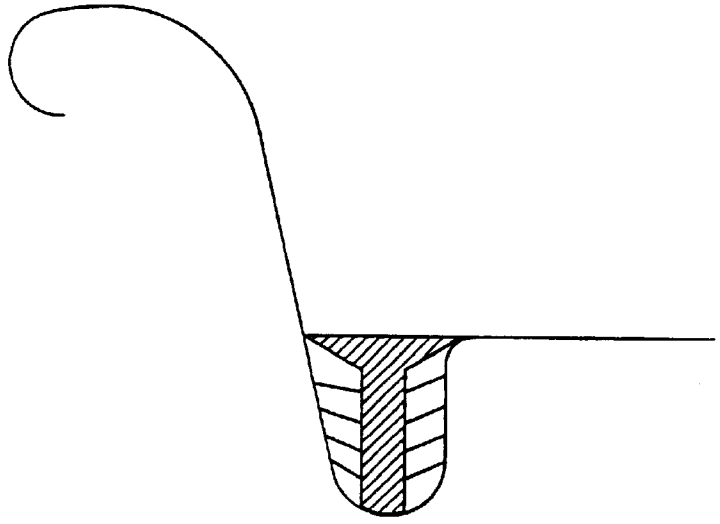

FIG. 20

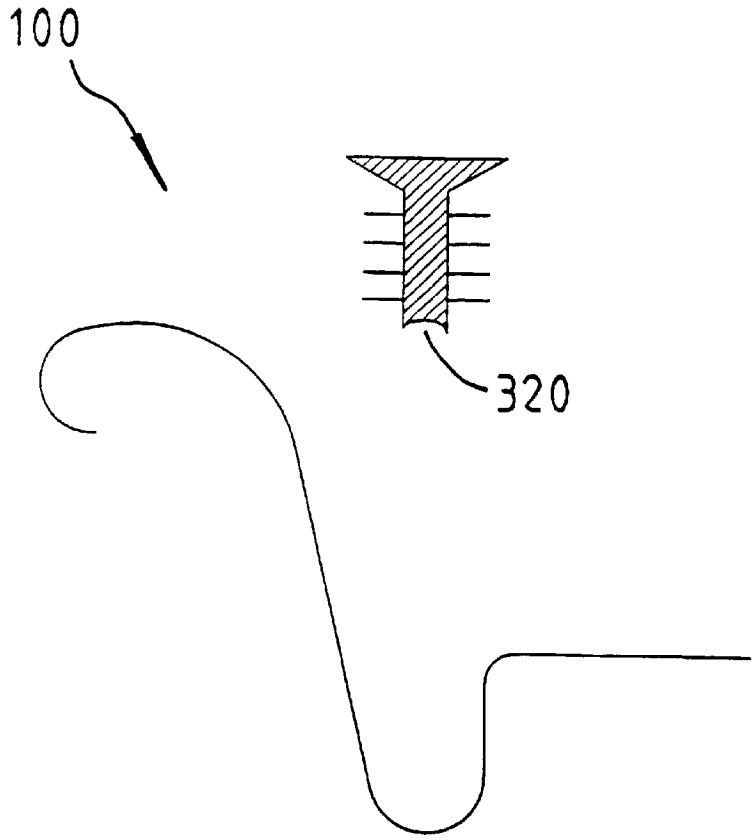

FIG. 21

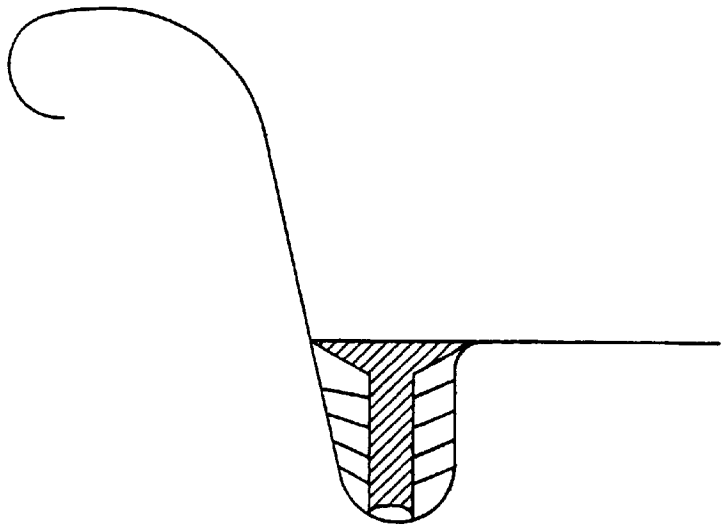

FIG. 22

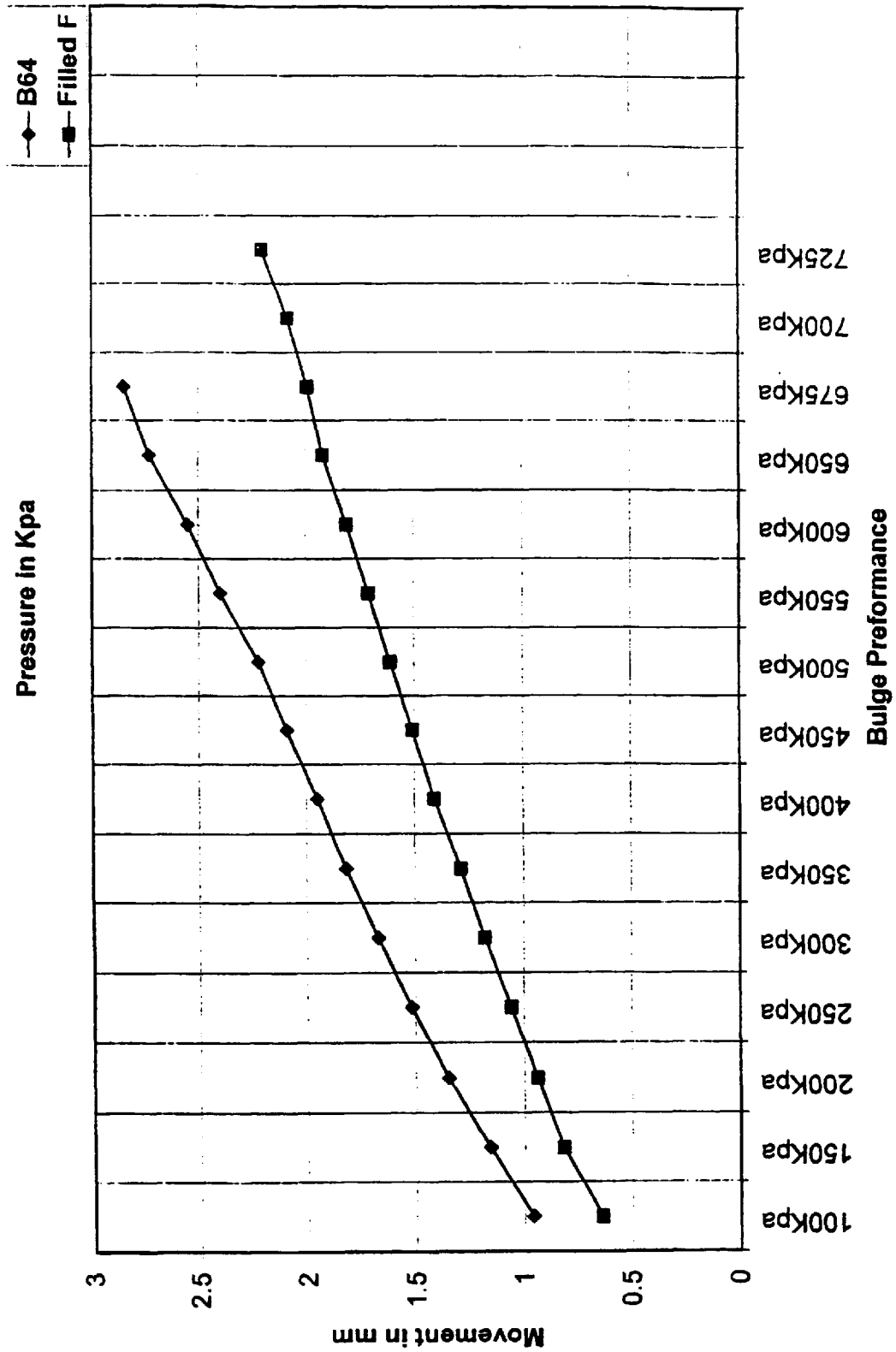
B64
Filled F
Pressure in Kpa
Movement in mm
3
2.5
2
1.5
1
0.5
0
100Kpa
150Kpa
200Kpa
250Kpa
300Kpa
350Kpa
400Kpa
450Kpa
500Kpa
550Kpa
600Kpa
650Kpa
675Kpa
700Kpa
725Kpa
Bulge Preformance

FIG. 23

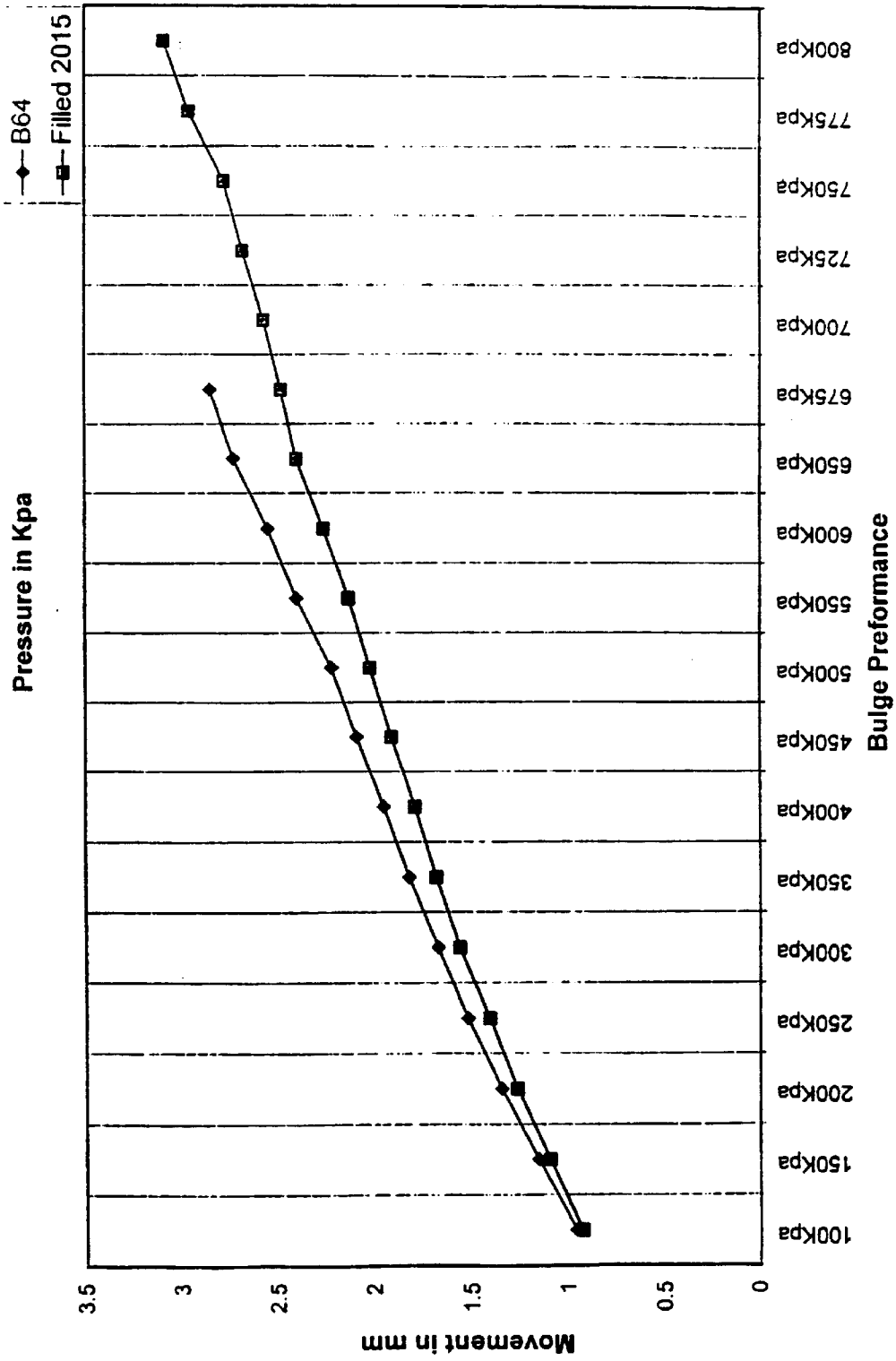
B64
Filled 2015
Pressure in Kpa
Movement in mm
3.5
3
2.5
2
1.5
1
0.5
0
100Kpa
150Kpa
200Kpa
250Kpa
300Kpa
350Kpa
400Kpa
450Kpa
500Kpa
550Kpa
600Kpa
650Kpa
675Kpa
700Kpa
725Kpa
750Kpa
775Kpa
800Kpa
Bulge Preformance

FIG. 24

BEVERAGE CONTAINER

CROSS REFERENCE TO RELATED CASES

This application is a continuation of patent application Ser. No. 09/530,927 filed May 8, 2000, now U.S. Pat. No. 6,425,493, which was the National Stage of International Application No. PCT/AU98/00946 filed Nov. 12, 1998 which claims priority to Australian patent application Nos. PP0330 filed Nov. 12, 1997, PP0804 filed Dec. 9, 1997, PP2249 filed Mar. 10, 1998, and PP6558 filed Oct. 19, 1998, the entirety of which is incorporated herein by reference.

TECHNICAL FIELD

This invention relates to a beverage container having a cap of a suitable material and the cap is configured for easy cleaning; and in particular but not limited thereto the cap is arranged with a ring of countersink adjacent to its peripheral and a filler material is fixed in the countersink so that the cap has a relatively reduced cap material yet is able to withstand normal internal pressure exerted on the cap when the container is filled with a carbonated drink.

BACKGROUND OF THE INVENTION

The applicant has observed that beverage containers, especially aluminium alloy drink cans, have a deep countersink in their caps at a position adjacent to their rims.

As these containers are normally stored in an upright position, foreign materials such as dirt and other undesired matters find their way in the countersinks. Where the containers are kept with foods such as meat or fish in a refrigerator or, cooler drips from such foods may fall in the countersinks. As the countersinks are relatively deep the foreign materials therein are not easily noticeable and are difficult to clean.

Further, for containers with beverage pouring apertures in their caps, beverage spillage tends to settle in the countersinks and on other parts of the caps.

Many people drink beverages directly from pour apertures in the caps. Bacteria, germs and diseases in the countersinks can come in contact with the drinkers. Accordingly these containers are not only unhygienic but also a health hazard.

The applicant has also noted that the caps of the beverage cans are normally secured to the can bodies by seaming with or without the assistance of an adhesive. For carbonated drinks the caps must have a minimum thickness in order that the seaming securement is sufficiently strong to prevent separation by internal pressures exerted by the carbonated drinks. This limitation is costly to can manufacturers as the use of thinner materials for the caps is currently not an option.

OBJECT OF THE INVENTION

It is an object of the present invention to alleviate or at least reduce to a certain level one or more of the above prior art disadvantages.

SUMMARY OF THE INVENTION

In one aspect the present invention resides in a beverage container having a hollow body member with opposed ends, a bottom member at one end and a cap member covering an opening at the opposite end thereof. The cap member is sealingly fixed to the body member at said opposite end and in a manner forming a rim at about the periphery of said opposite end. The cap member is configured so that its

exterior surface extending radially inwardly from the rim is substantially flat or continuous, or has a slight curvature from a position adjacent to the rim.

In a further aspect therefore the present invention resides in a cap member for covering an open end of a beverage container. The cap member ,is configured with a rim forming portion at its periphery and so that its exterior surface extending radially inwardly from the rim forming portion is substantially flat or continuous, or has a slight curvature from a position adjacent to the rim forming portion.

It is preferred that the cap member has a substantially ring-shaped countersink at a position adjacent to the rim or rim forming portion and a filler material arranged in the countersink.

The cap member and the body member may be arranged for removably fixing the cap member to the body member.

The removably fixing arrangement may include a thread on said opposite end and a complementary thread on a periphery of the cap member so that the cap member can be threadably fixed to the body member.

The beverage container can be made of any suitable material. Aluminium, aluminium alloy, steel and plastic are examples of the suitable materials. Different components of the container can be made of different ones of the materials. For example the body member can be made of steel and the cap member made of plastic. Preferably the cap member is configured so that its mid-point is relatively higher than its portion adjacent to the rim or rim forming portion.

The cap member may have one or more ribs or ridges formed on its interior surface and/or exterior surface for improving its structural strength. Other ribs or ridges may also be formed adjacent to a pour aperture in the cap member. The filler material preferably extends to about the same level as a region of the cap member radially inward therefrom.

Typically the cap member has a scored region and means for assisting separation of the scored region from the rest of the cap member. When the scored region is separated the cap member presents the pouring aperture for dispensing beverage contained in the container.

The assisting means can be a ring-pull tab, a press button or any other suitable means.

One or more parts of the cap member surrounding the pour aperture may be shaped so that any spillage of beverage may flow automatically back into the container through the aperture.

The filler material can be a natural or synthetic material. Desirably it is a material approved by the relevant authority for use in or on a drink container.

The filler material preferably extends to about the same level as a region of the cap member radially inward therefrom.

It is also preferred that the filler material is an adhesive material provided in the countersink and set therein.

In an alternative form the filler material is a ring of rubber or plastic insert element adapted for insertion in the countersink and fixed therein by fixing means.

The fixing means may include an adhesive and/or mechanical deformation of the cap at the countersink or of the filler material.

In one form the mechanical deformation comprises one or wedge portions projecting into the filler material. The or each wedge portion may be arranged to project into one side or opposite sides of the filler material. The wedge portion or

portions may also extend laterally or longitudinally or at any angular direction, or in a combination of alternate lateral and/or longitudinal directions and/or angular directions.

In another form the mechanical deformation comprises one or more deformable portions on the filler material and the deformable portion(s) are arranged so that upon insertion of the filler material into the countersink they flow or deform in a manner which in cooperation with the sides of the countersink fixes the filler material therein.

In a further form the mechanical deformation comprises a suction portion formed on the material. The suction portion upon insertion in the countersink fixes to a surface of the countersink and thereby fixes the filler material in the countersink.

The applicant has found that the cap member with a filler material surprisingly increases the peaking pressure (i.e. a pressure at which the cap member fails or separates from the can body) substantially higher than the industrial standard peaking pressure of 620 Kpa or 6.32 Kg/cm^2 for Aluminium alloy cap member. It follows that a relatively thinner material can be utilized for the cap member and at the same time complying with the industrial requirements. As millions if not billions of beverage containers are consumed each day the applicant's invention will save the can manufacturers substantial material costs. It will also reduces reduce energy consumption as aluminium alloy manufacturing which uses large amount of energy will have no need to maintain the current production rate.

BRIEF DESCRIPTION OF THE DRAWINGS

In order that the invention can be clearly understood and put into practical effect the invention will now be described in reference to the accompanying drawings which illustrate non-limiting embodiments of the present invention, and wherein:

FIG. **1** is a perspective view of a beverage container according to an embodiment of the present invention;

FIG. **2** is a section view of the container shown on FIG. **1**;

FIG. **3** is an enlarged partial cross sectional view **6**f the container shown in FIG. **1**;

FIG. **4** is a perspective view of a beverage container according to another embodiment of the present invention;

FIG. **5** is a cross sectional view of the container shown in FIG. **4**;

FIG. **6** is a perspective view of a beverage container according to a further embodiment of the present invention;

FIG. **7** is an enlarged partial cross-sectional view of the container shown in FIG. **6**;

FIG. **8** is a perspective view of a beverage container according to another further embodiment of the present invention;

FIG. **9** is an enlarged partial cross-sectional view of the container shown in FIG. **8**;

FIG. **10** is a schematic view showing a cap member according to yet another embodiment of the present invention, with a form of the insert element about to be inserted in the countersink;

FIG. **11** is a section view of the cap member shown in FIG. **10** with the insert element fully inserted in the countersink;

FIG. **12** is a blown-up partial cross sectional view of the cap member shown in FIG. **2**;

FIGS. **13** to **15** are respectively similar to FIGS. **10** to **12** except for the mechanical deformation arrangement for fixing the insert element;

FIGS. **16** to **18** are respectively similar to FIGS. **1** to **3** except for the mechanical deformation arrangement for fixing the insert element;

FIG. **19** is a partial schematic cross-section view of another form of a cap member for a beverage container according to the present invention, with a form of the insert element about to be inserted in the countersink;

FIG. **20** is a section view of the cap member shown in FIG. **19** with the insert element fully inserted in the countersink;

FIG. **21** is a partial schematic cross-section view of a cap member for a beverage container as shown in FIG. **19** except with the addition of a suction portion in the insert element;

FIG. **22** is a section view of the cap member shown in FIG. **21** with the insert element fully inserted in the countersink;

FIG. **23** is a comparison chart showing deformation in the cap members with and without Araldite F as a filler material; and

FIG. **24** is a comparison chart showing deformation in the cap members with and without Araldite 2015 as a filler material.

DETAILED DESCRIPTION OF THE DRAWINGS

Referring initially to FIGS. **1** to **3** there is shown a beverage container **10** which in this case is in the form of an aluminium alloy beverage can, for beer, carbonated drink, fruit juice and the like. It should be noted that the container **10** can also be made of steel or plastic.

The can **10** has a tubular body member **12** with a top end and a bottom end. As can be seen in FIGS. **2** an end member **14** is formed at the bottom end and a cap member **16** is sealingly fixed to the periphery of the top open end by seaming in this case. A rim **18** is formed at the seam. Alternative the top end may be threaded,(not shown) and the cap member **16** may have a complementary threaded periphery (not shown) so that the cap member **16** can be threadably fixed to the top end and easy removal of the cap member **16** from the top end.

While it is not shown it should be understood that a sealing compound can be applied at the seam.

The can **10** has a tubular body member **12** with a top end and a bottom end. As can be seen in FIG. **2** an end member **14** is formed at the bottom end and a cap member **16** is sealingly fixed to the periphery of the top open end by seaming in this case. A rim **18** is formed at the seam. Alternatively the top end may be threaded (not shown) and the cap member **16** may have a complementary threaded periphery (not shown) so that the cap member **16** can be threadably fixed to the top end and easy removal of the cap member **16** from the top end.

FIGS. **2** and **3** clearly show that the exterior surface **28** of the cap **16** has a slightly convex curvature radially inward from the rim **18**. Any foreign material on the exterior surface **28** and the portion **20** can be easily noticed and cleaned.

Cleaning the surface **28** and the portion **20** is simply done by a wiping motion with a cleaning cloth or other suitable material for cleaning.

A portion **30** of the cap **16** is shaped to allow spillage of the beverage to flow back into the can **10** through the pour aperture.

As can be seen in FIG. **1** the portion **30** extends from near the rim **18** and around to substantially embrace the portion **20** and to about the tip of the tab portion **24**. The portion **30**

(see FIGS. **2** and **3**) slopes downwardly from the rim **18** to the score line **22**.

FIG. **4** shows another embodiment of a beverage can **50** according to the present invention. The can **50** is substantially similar to the can **10** described with reference to FIGS. **1** to **3** and features which are the same as or similar to those of the can **10** are given the same numeral references.

In this embodiment the shaped portion **52** extends from near the rim **18** to about half way of the separable portion **20**.

Ribs or ridges may be formed on the interior surface and/or the exterior surface of cap members **16** of the cans **10**, **50** for improving structural strength of the cap members **16** **10**, **50**. One or more other ribs or ridges may also be formed adjacent to the score line **22** for preventing deformation when separating the portion **20**.

FIGS. **6** and **7** show a further embodiment **60** of the beverage can according to the present invention. The can **60** is substantially similar to the cans **10** and **50** described earlier except for the configuration of the cap member **16**.

The cap member **16** of the can **60** has a rib **62** on the exterior surface thereof. The rib **62** is radially inward of the rim **18** and extends from adjacent to one side of the scored portion and around the tab **24** to adjacent the other side of the portion **20**.

The rib **62** joins to spaced further ribs **64** on either side of the portion **20**.

As can be seen in FIG. **6** each further rib **64** is spaced from the scored portion **20** and follows substantially the shape of the scored portion **20** at each side thereof.

FIGS. **8** and **9** show another further embodiment **70** of the beverage can according to the present invention. The can **70** in this case is substantially the same as the can **60** shown in FIGS. **6** and **7**, except that it has its rib **72** and further ribs **74** on the interior surface of the cap member **16**.

It should be noted that the present invention anticipates that a can of the present invention can incorporate both ribs **62** and **72**, and further ribs **64** and **74** on a single cap member **16**. Alternatively, the can may have either rib **62** or rib **72** and either further rib **74** or **64** respectively arranged on the cap member **16**.

Referring now to FIGS. **10** to **12** there is shown a cap member **100** for a beverage can (not shown for clarity). The cap member **100** has a cap body **120** with a peripheral **140** which is shaped to be positioned to position over an open end of a can body and seamed thereat to join to the can body for forming a rim of the can. Adjacent to the peripheral **140** is formed a countersink **160**.

An insert element **180** of a plastic material such as PET is inserted in the countersink **160** and fixed therein by wedge portions **200** which in this case are nibs pressed into the insert element **180**.

The insert element **180** when fully inserted is substantially level with the radially inner part **220** of the cap **10**. The cap **10** can therefore be easily cleaned. It also allows a relatively thinner cap material to be used as it improves the overall strength of the cap **100**.

FIGS. **13** to **15** show another embodiment of the cap **100** according to the present invention. The only difference from the embodiment shown in FIGS. **10** to **12** is that the wedge portions **200** are now in the form of a combination of alternating laterally directed and longitudinally directed indentions.

FIGS. **16** to **18** show yet another embodiment of the cap **100** according to the present invention. In this embodiment the insert element **180** has recesses **240** on both its sides and the wedge portions **200** are indentations pressed into the recesses **240**.

FIGS. **19** and **20** show an embodiment of the cap **100** according to the present invention. In this embodiment the insert element **180** has a stem position **260**, a top portion **280** joined to an end of the stem portion **280** and a number of spaced rings **300** extending around the stem portion **260**. In use the rings **300** are deformed upwardly as shown in FIG. **20**, when inserting into the countersink **160** and thereby fixing the insert **180** within the countersink **160**.

FIGS. **21** and **22** show another embodiment of the present invention. This embodiment is substantially similar to that shown in FIGS. **19** and **20**. In this embodiment **30** the free end of the stem portion **260** has a suction portion **320** which further assists in the fixing of the insert element **180** in the countersink **160**.

It should be noted that the cap **100** of the embodiments shown in FIGS. **19** to **22** can have their insert elements **180** inserted in the countersink **16** before or after the cap body **12** is seamed to the can body.

The chart in FIG. **23** shows that an industrial standard B**64** alloy beverage can with a cap member of 0.25mm thickness currently in use in Australia subjecting to 50 KPa incremental internal pressures peaks at 675 KPa. When the countersink in the cap member of the same can is filled with a filler material of 5 part Araldite®F (a Ciba-Geigy product) and 1 part hardener HY2404 (a Ciba-Geigy product), the same test shows that the peaking pressure increases to about 725 KPa. In fact the filled cap member has less deformation throughout the whole range of the test pressures.

The test for the FIG. **23** comparison is repeated with a filler material represented by Araldite®2015 (a Ciba-Geigy product) which is a mixture of 1 part of AV 5308 adhesive to 1 part of HV 5309-1 hardener. As can be seen in FIG. **24** the peaking pressure increases to about 800 KPa.

The comparison results in FIGS. **23** and **24** support the finding that beverage cans with a thinner grade alloy cap member of the present invention can be used without degrading the peaking pressure requirement of the industry.

Whilst the above has been given by way of illustrative examples of the present invention many variations and modifications thereto will be apparent to those skilled in the art without departing from the broad ambit and scope of the invention as herein set forth.

What is claimed is:

1. A cap member for covering an open end of a beverage container, the cap member comprising:

a rim portion at its periphery;

a substantially ring-shaped countersink at a position proximate to the rim forming portion;

a filler material disposed in the countersink; and

a base extending substantially radially inwardly from the countersink, the base including an interior surface and an opposing exterior surface; wherein the filler material comprises at least one of a plastic material and a rubber material.

2. The cap member according to claim **1**, wherein the plastic is a polyester.

3. The cap member according to claim **1**, wherein the filler material is substantially even.

4. The cap member according to claim **1**, wherein the base includes at least one rib formed therein.

5. The cap member according to claim **1**, wherein the base includes at least one ridge formed therein.

6. The cap member according to claim **1**, wherein the base exterior surface is convex.

7. The cap member according to claim **6**, wherein a base mid-point is relatively higher than regions of the base proximate the rim forming portion.

8. A cap member for covering an open end of a beverage container, the cap member comprising:

a rim portion at its periphery;

a substantially ring-shaped countersink at a position proximate to the rim forming portion;

a filler material disposed in the countersink; and

a base extending substantially radially inwardly from the countersink, the base including an interior surface and an opposing exterior surface;

wherein the filler material is substantially even and extends to approximately the same level as a region of the cap member radially inward therefrom.

9. The cap member according to claim **8**, wherein the base includes at least one rib formed therein.

10. The cap member according to claim **8**, wherein the base includes at least one ridge formed therein.

11. The cap member according to claim **8**, wherein the base exterior surface is convex.

12. The cap member according to claim **11**, wherein a base mid-point is relatively higher than regions of the base proximate the rim forming portion.

13. The cap member according to claim **8**, wherein the filler material comprises a plastic.

14. The cap member according to claim **13**, wherein the plastic comprises PET.

15. The cap member according to claim **8**, wherein the filler material comprises a rubber material.

16. The cap member according to claim **8**, wherein the cap member is made from a material comprising aluminum.

17. A cap member for covering an open end of a beverage container, the cap member comprising:

a rim portion at its periphery;

a substantially ring-shaped countersink at a position proximate to the rim forming portion;

a filler material disposed in the countersink; and

a base extending substantially radially inwardly from the countersink, the base including an interior surface, an opposing exterior surface, and at least one of a rib and a ridge formed therein, wherein the filler material is substantially even and extends to approximately the same level as a region of the cap member radially inward therefrom.

18. A cap member for covering an open end of a beverage container, the cap member comprising:

a rim portion at its periphery;

a substantially ring-shaped countersink at a position proximate to the rim forming portion;

a filler material disposed in the countersink and comprising at least one of a plastic material and a rubber material; and

a base extending substantially radially inwardly from the countersink, the base including an interior surface and an opposing exterior surface, wherein the filler material is substantially even.

* * * * *

UNITED STATES PATENT AND TRADEMARK OFFICE

CERTIFICATE OF CORRECTION

PATENT NO. : 6,729,495 B2
DATED : May 4, 2004
INVENTOR(S) : James Lee Gardiner

It is certified that error appears in the above-identified patent and that said Letters Patent is hereby corrected as shown below:

Title page,
Item [57], **ABSTRACT**,
Line 4, delete "apposition" and insert -- a position --;

Column 2,
Lines 64-65, delete "comprises one or wedge" and insert -- comprises one or more wedge --;
Lines 65-66, delete "The or each wedge portion" and insert -- The wedge portion --;

Column 3,
Line 25, delete "reduces";
Line 27, delete "amount" and insert -- amounts --;

Column 4,
Line 33, delete "FIGS. 2" and insert -- FIG. 2 --;
Line 37, delete "Alternative" and insert -- Alternatively --;
Delete the paragraph beginning at lines 44-53 and replace with the following paragraph, -- The can 10 as shown is an easy open type. Its cap 16 has a separable portion 20 defined by a score line 22. A ring pull tab 24 fixed to the cap 16 by a rivet 26 is pivotally movable for separating the portion 20 and thereby presenting a pour aperture for dispensing the beverage in the can 10. --.

Signed and Sealed this

Third Day of August, 2004

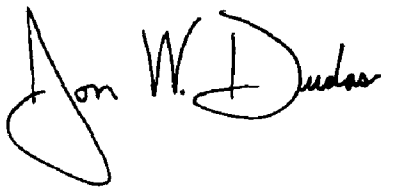

JON W. DUDAS
Acting Director of the United States Patent and Trademark Office