US006648862B2

(12) **United States Patent**
Watson

(10) **Patent No.: US 6,648,862 B2**
(45) **Date of Patent: Nov. 18, 2003**

(54) **PERSONALLY PORTABLE VACUUM DESICCATOR**

(75) Inventor: **Richard Watson**, Mc Pherson, KS (US)

(73) Assignee: **Spheric Products, Ltd.**, San Antonio, TX (US)

(*) Notice: Subject to any disclaimer, the term of this patent is extended or adjusted under 35 U.S.C. 154(b) by 39 days.

(21) Appl. No.: **09/996,970**

(22) Filed: **Nov. 20, 2001**

(65) **Prior Publication Data**

US 2003/0097100 A1 May 22, 2003

(51) **Int. Cl.**[7] **A61M 1/00**
(52) **U.S. Cl.** **604/319**; 604/327
(58) **Field of Search** 604/317–328, 604/313

(56) **References Cited**

U.S. PATENT DOCUMENTS

4,710,165	A		12/1987	McNeil et al.	
4,930,997	A		6/1990	Bennett	
5,002,541	A	*	3/1991	Conkling et al.	604/319
5,073,172	A		12/1991	Fell	
5,134,994	A		8/1992	Say	
5,419,769	A	*	5/1995	Devlin et al.	604/119
5,429,601	A	*	7/1995	Conley et al.	604/65
5,449,347	A	*	9/1995	Preen et al.	604/118
5,466,229	A	*	11/1995	Elson et al.	604/317
5,522,808	A	*	6/1996	Skalla	604/319
5,634,893	A	*	6/1997	Rishton	604/6.1
5,944,703	A		8/1999	Dixon et al.	
6,024,731	A		2/2000	Seddon et al.	
6,142,982	A		11/2000	Hunt et al.	
6,152,902	A		11/2000	Christian et al.	
6,210,360	B1	*	4/2001	Kong	604/73
6,352,525	B1	*	3/2002	Wakabayashi	604/322
6,503,450	B1	*	1/2003	Afzal et al.	422/45

OTHER PUBLICATIONS

Ametek Product Bulletin, Lamb Electric, Mar., 1998.*

* cited by examiner

Primary Examiner—Weilun Lo
Assistant Examiner—Michael Bogart
(74) *Attorney, Agent, or Firm*—Loeffler Jonas & Tuggey LLP

(57) **ABSTRACT**

The vacuum desiccator low pressure vacuum pump and trap and is transportable upon a user's person. The device is especially useful to remove excess fluids from wounds and incisions as they heal. The device includes a desiccator cartridge containing a fluid trapping agent. The desiccator cartridge is connected to a vacuum pump member providing a low vacuum pressure to the interior chamber of the desiccator cartridge. A small battery powered, electric motor drives the pump member. An electrical control circuit, including the battery power source, controls the operation of the electric motor. A single passage, one-way, gas/liquid flow pathway connects the inlet port of the desiccator cartridge to an occlusive dressing covering the wound to be drained. The control circuit includes one or more ancillary circuits for controlling operation of the device, such as: a power circuit, a moisture sensor, a timer circuit, a vacuum pressure sensor, and a pressure differential sensor.

34 Claims, 4 Drawing Sheets

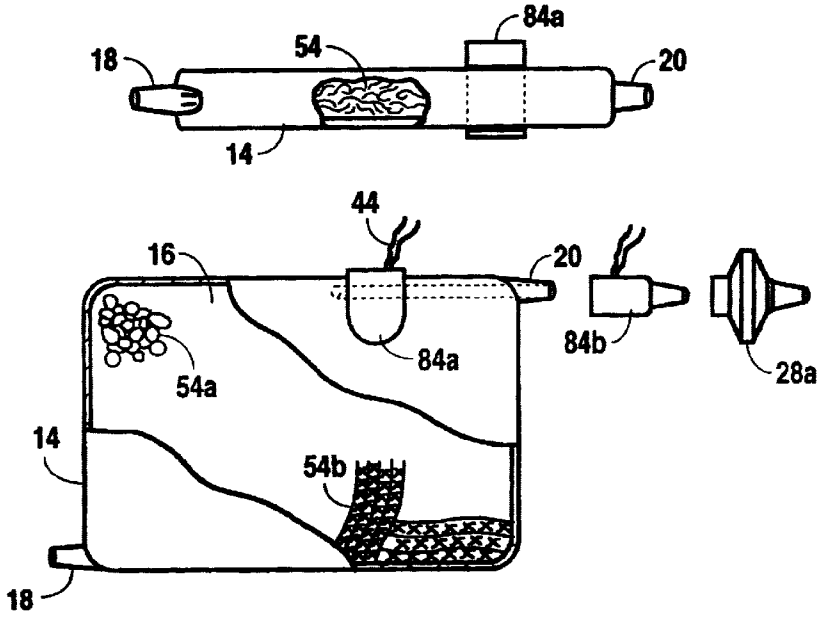

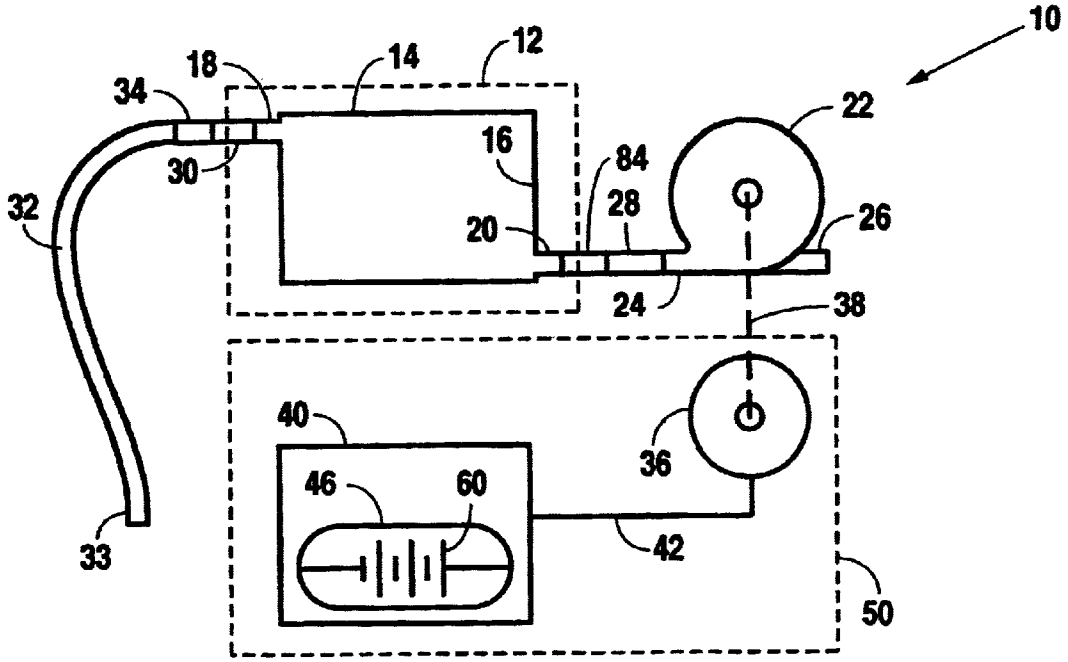

Fig. 1

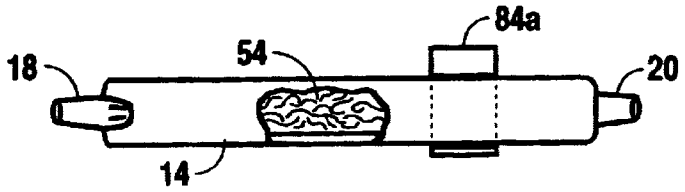

Fig. 2A

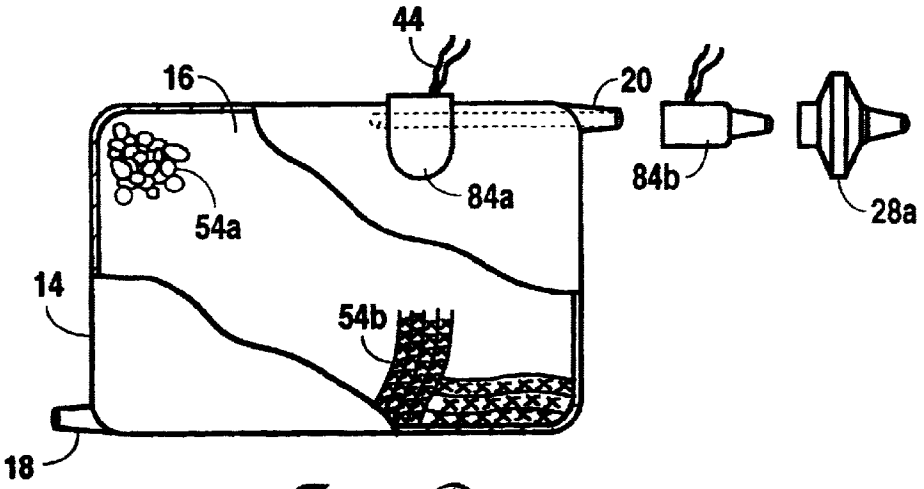

Fig. 2B

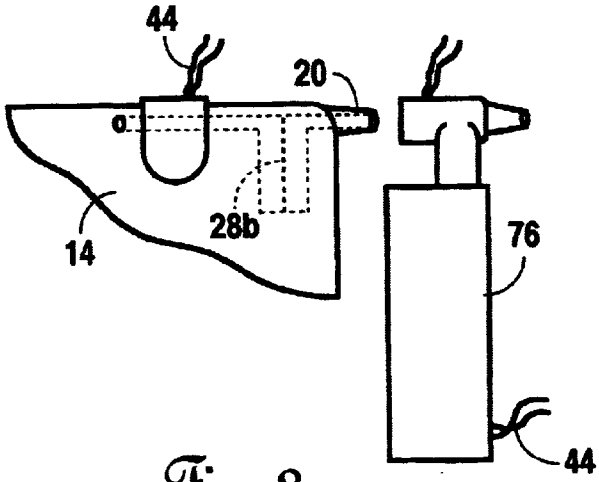

Fig. 3

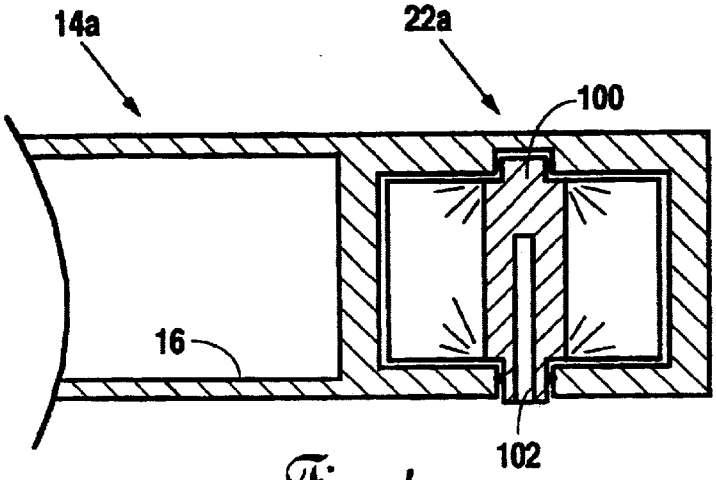

Fig. 4

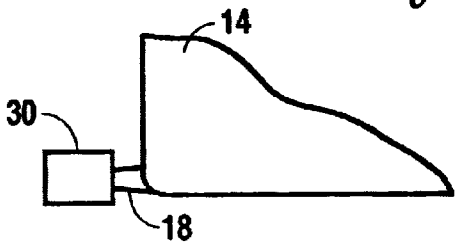

Fig. 5A

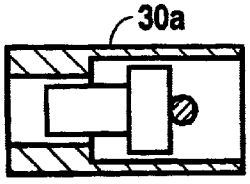

Fig. 5B

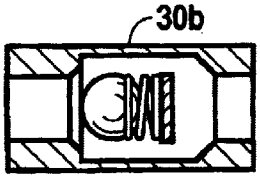

Fig. 5C

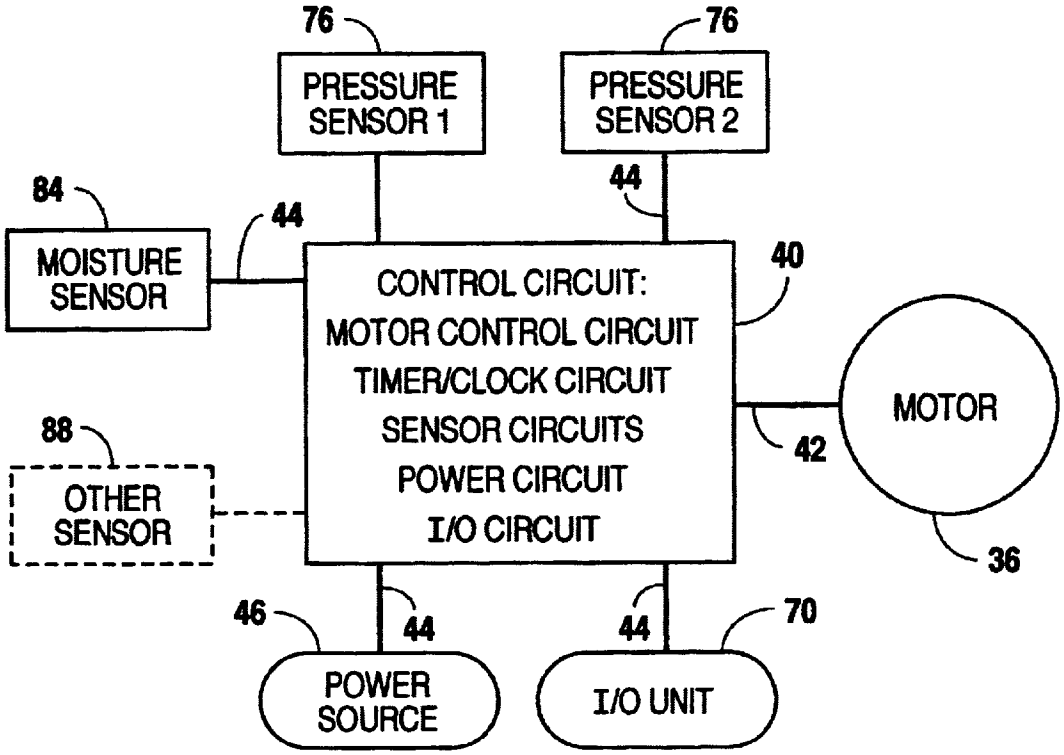

Fig. 6

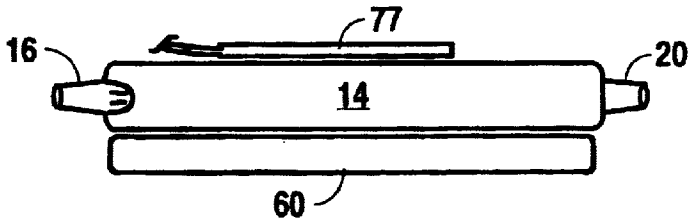

Fig. 7A

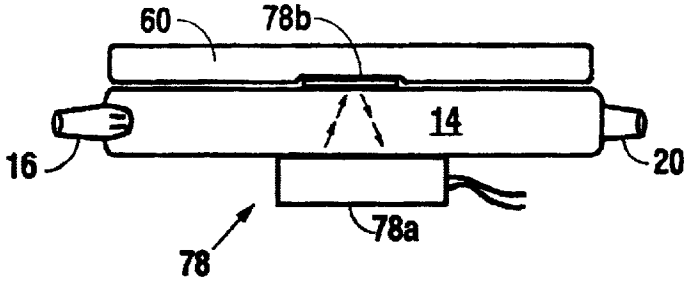

Fig. 7B

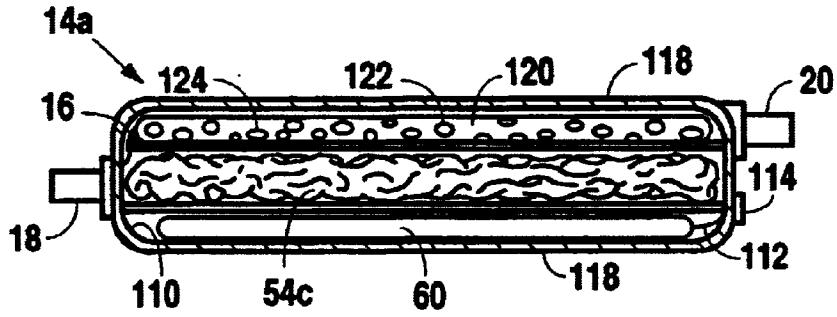

Fig. 8

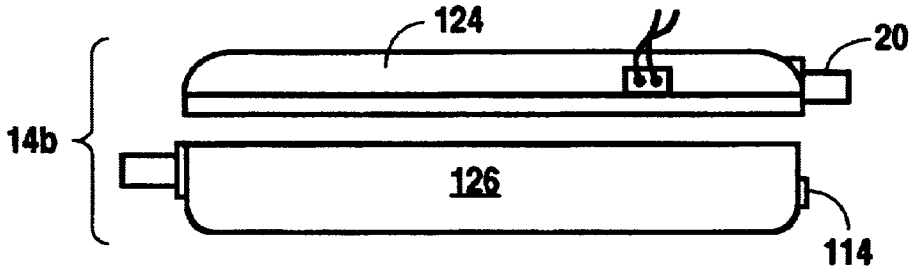

Fig. 9A

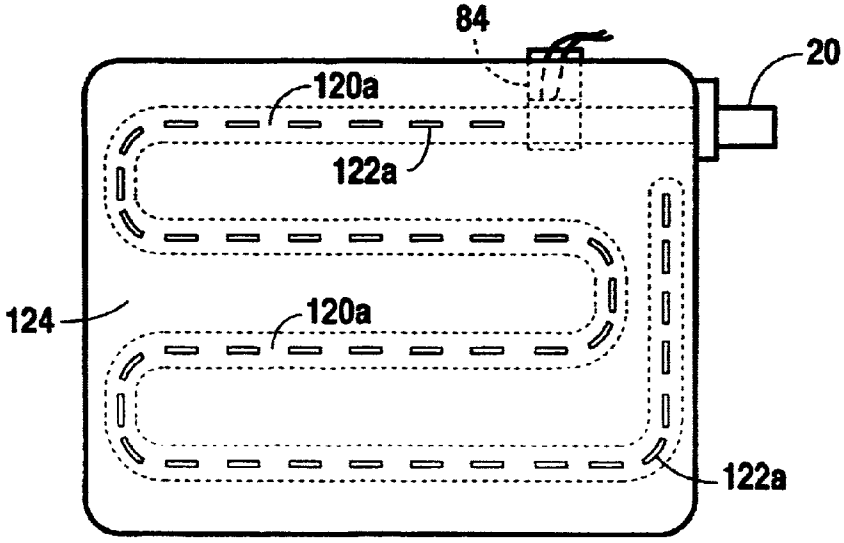

Fig. 9B

PERSONALLY PORTABLE VACUUM DESICCATOR

FIELD OF THE INVENTION

The present invention is in the field of portable, motor driven vacuum p-umps having a movable working member which is motivated by electricity or a magnetic field. More specifically, the present invention relates to a personally portable, low negative pressure, motor driven vacuum pump having an electric power storage means and a moisture trap.

BACKGROUND OF THE INVENTION

A number of portable, low pressure vacuum apparatuses capable of producing vacuum pressures down to about 500 mm HG currently exist. Medicine, particularly the wound healing arts, is a field where such devices have a specific utility. In the wound healing arts, it has been recognized that the removal of excess fluid from a wound site can improve the healing of the wound. This recognition has motivated the field to develop wound treatment regimens that include the use of vacuum devices for removing excess exudate from a wound site. For example, in full thickness dermal wounds devices to assist in the removal of excess fluid from these wounds have been developed and used. Further, because of the recognized benefits of encouraging patients to be active and mobile if possible, these devices need to be portable, and preferably, personally portable.

One strategy for providing a personally portable, low pressure vacuum source for drainage of wound site involves the use of a passive vacuum reservoir. Examples of this types of device includes those disclosed by Fell, U.S. Pat. No. 5,073,172; Seddon et al., U.S. Pat. No. 6,024,7311 and Dixon et al., U.S. Pat. No. 5,944,703. Typically, these devices comprise an evacuated cannister attached to a drainage tube. Because the vacuum pressure in the reservoir of these devices continuously decreases as the wound is drained (and the reservoir filled), they often include a means for regulating the pressure delivered to the wound site at some level below the maximum pressure of the vacuum reservoir. Additionally, these devices require a reservoir of a relatively larger volume than that of the volume of fluid they are capable of removing from a wound site.

Recognizing these limitations, the field has been further motivated to develop means for providing a portable, low pressure vacuum source for drainage of a user's wound site which provides a relatively constant vacuum pressure. A strategy for accomplishing this objective includes having the device comprise a vacuum pump to provide a constant low pressure vacuum source, or to replenish a separate vacuum reservoir. An example of this type of device includes that disclosed by McNeil et al., U.S. Pat. No. 4,710,165. Also see U.S. Pat. No. 5,134,994 to Say. Although portable, these devices are bulky and obvious to an observer of the user, and may subject the user to embarrassment or personal questions. It would be beneficial to have a portable vacuum device that was personally portable by the user without being obvious to an observer.

An apparatus which addresses this latter benefit is disclosed in U.S. Pat. No. 6,142,892 to Hunt et al. The Hunt apparatus is supported on a belt or harness worn by the user, and is small enough to be unobtrusive when worn under a jacket or the like. However, the Hunt apparatus utilizes a liquid reservoir containing the fluids drained from a wound site. Fluids contained in the liquid reservoir of Hunt are subject to slouching, which may adversely affect the function of the Hunt apparatus if the fluid prematurely enters an inappropriate pathway (the outlet end of the cannister). Also, the Hunt device requires multiple tubes or a multi-lumen tube running from the device to the wound site to accomplish its full utility. Additionally, the Hunt apparatus is intended to be worn by a patient at waist level or higher. This means that wound sites below and distal to the users waist can be subjected to a higher vacuum pressure than with a device that may be located more proximal the wound site than the Hunt apparatus.

Although the above apparatuses may be useful in the field for accomplishing their intended purposes, it would be beneficial to have an alternative personally portable vacuum device that can be worn unobtrusively by the user, and which is not subject to slouching of the fluid it retains, and further which does not require special tubing to connect it to a wound site.

SUMMARY OF THE INVENTION

The present desiccator is a personally portable vacuum pump and moisture trapping device. The invention is useful where a user desires to carry a device for collecting and trapping small volumes of liquids. As a specific example, the present invention is therapeutically useful to provide a personally portable low negative pressure source and trap for aspirating and collecting fluid exudate from a wound or incision. A further benefit of the present invention for such applications involving biological waste is that the trap and all other components of the desiccator device that contact the aspirated biological materials are removable from the device and are replaceable. The desiccator device includes a trap, a vacuum pump head member, an electric motive mechanism and an electric control and power circuit.

The trap comprises a desiccator cartridge enclosing an interior space or chamber. An inlet port and an outlet port provide gas/liquid flow communication with the interior chamber of the desiccator cartridge. The desiccator cartridge is of a design and construction to withstand the application of an appropriate vacuum without substantial collapse of the interior chamber. Some distortion of the cartridge while under vacuum is desirable in some applications, e.g., where buffering of the vacuum pressure of the system is beneficial. A trapping agent is contained within the interior chamber for retaining the fluid that enter the chamber. The composition of the trapping agent is selectable by one of ordinary skill in the art in view of the teaching herein and in consideration of the characteristics of the fluid to be trapped.

A vacuum pump member or pump head is connected in gas flow communication with the interior chamber of the trap by having the low pressure port of the vacuum pump member being connected to the outlet port of the trap. The exhaust port of the vacuum pump member is vented to atmosphere. Operation of the vacuum pump member develops a low vacuum pressure which is communicated to the interior chamber of the desiccator cartridge and then to the inlet port of the trap. The vacuum pressure at the inlet port of the trap is selectable by the ordinary skilled artisan depending on the intended use of the present device. Typically, the selected vacuum pressures range less than about 250 mm Hg, and in part depends on the vacuum pressure to be delivered to the wound site and the any loss of vacuum pressure across the delivery tube connecting the inlet port to the wound site. An electric motive means (an electric motor) is coupled to the vacuum pump member and drives the pump head. An electrical control circuit, including an electrical power source, is in electrical communication

with the electric motive means. The control circuit is operable to control the operation of the electric motive means.

The desiccator cartridge of the trap has only a single, ingress gas/liquid flow pathway, which is the inlet port. Additionally, the flow path at the inlet port is unidirectional, in that gas/liquid flow can enter the trap via the inlet port, but not exit or back flow out of the trap via the inlet port. Optionally, the personally portable vacuum desiccator includes a single passage gas/liquid flow path delivery tube for connecting the trap to a source of gas or liquids to be delivered into the trap. The delivery tube has an input end for communicating with the gas/liquid source and an output end connectable to the inlet port of the desiccator cartridge. A one-way valve is located proximate the inlet port of the desiccator cartridge. The one-way valve prevents the contents of the desiccator cartridge from back-flowing out of the inlet port. The one way valve may be separate from or incorporated into the inlet port. The desiccator cartridge is removable from the vacuum desiccator and separately disposable. A fresh desiccator cartridge is installed in the desiccator to replace the removed cartridge.

The desiccator cartridge contains a trapping agent for containing the liquids or moisture delivered to the trap under the force of the vacuum. The trapping agent combines with the liquid or moisture to alter its physical features, i.e., from a liquid or vapor to a mixed phase or solid state. Compositions suitable for use as trapping agents in the present invention are selectable by one of ordinary skill in the art in view of the present disclosure and teachings herein. The trapping agent should adsorb, absorb or in some way combine with the liquid or moisture to immobilize and keep it from sloshing in the desiccator cartridge as it is accumulated in the interior chamber. Examples of potentially suitable trapping agents include: a desiccant, an adsorbent and an absorbent. Specific examples include silica gel, sodium polyacrylate, potassium polyacrylamide and related compounds. Such moisture trapping materials are often found in disposable baby diapers and in feminine napkins. The level of moisture in the desiccant chamber is monitored by the moisture sensor circuit. When the amount of moisture trapped in desiccant material approaches saturation, the chamber may either be removed and disposed of or recharged with fresh desiccant material and repositioned in the device (depending on the design of the desiccator cartridge).

The present vacuum desiccator can further comprise a filter for blocking bacteria and/or untrapped moisture from passing into the vacuum pump member or from being vented to atmosphere. The filter may be located proximate the outlet port to protect the pump member and/or proximate the exhaust port to prevent venting bacteria or moisture to atmosphere.

The electric motive means of the vacuum desiccator includes an electric motor. The motor is coupled to the vacuum pump member to drive the pump. The motor may be coupled to the pump head by any of a number of means known to and practicable by the ordinary skilled artisan. For example, the motor shaft may be integrated with the vacuum pump head, it may be mechanically coupled to the vacuum pump so as to be readily separable from the pump head, or it may be magnetically coupled to the pump head so as to, again, be readily separable from the vacuum pump member. A readily separable motive means is particularly useful where the vacuum pump member and the desiccator cartridge are integrated together as a unit.

A purpose of the electrical control circuit is to monitor the condition of the device and to control operation of the motive means. The electrical control circuit includes the electrical power source for the device. The power source comprises an electrical power storage means, such as a battery. A feature of the power source is that the electrical storage means is removable from the electrical control circuit and is replaceable. Additionally, the electric control circuit optionally includes other ancillary circuits for the operation and control of the device. These circuits include: a moisture sensor circuit for detecting the presence of moisture proximate the low pressure port of the vacuum pump member; a timer circuit for intermittently operating the electric motive means; a vacuum pressure sensor circuit for detecting a vacuum pressure in the interior chamber or elsewhere in the device; and a pressure differential sensor circuit for sensing a difference in pressure between the inlet and outlet ports of the desiccator cartridge.

The component parts of the vacuum desiccator device which are in gas/liquid flow communication are replaceable. This allows the components of the device which are exposed to contact with the wound fluids to be separable from the other components of the device to facilitate cleaning or disposal of contaminated components.

The present personally portable vacuum desiccator can further comprise a housing for containing some or all of the component parts of the device. For example, the housing may contain the electric motive means and the electrical control circuit, while the other components are simply attached to the housing, e.g., an integrated pump head/trap combination assembly. Other configurations obviously are possible, such as a housing containing the electric motive means and the electrical control circuit and additionally either or both of the trap (desiccator cartridge) and the vacuum pump member.

Additionally, the present vacuum desiccator device may comprise the battery being housed in a battery compartment attached or integral to the desiccator cartridge of the moisture trap. In this configuration, the battery and the desiccator cartridge are replaceable in the device as a single unit.

It is a feature of the present invention that the personally portable vacuum desiccator can be used as part of a treatment regimen to promote wound healing by drawing excess wound exudate away from the wound site. As an example of using the desiccator for this purpose, an open, full thickness dermal wound is covered with an air tight dressing, such as are commercially available. The input end of the gas/liquid flow delivery tube is positioned under the dressing in flow communication with the wound site. The vacuum desiccator is activated, a low negative pressure is produced at the wound site via the delivery tube and excess fluids excreted by the wound are removed under the force of the low negative pressure.

BRIEF DESCRIPTION OF THE DRAWINGS

FIG. **1** is a schematic diagram of the major components of the present vacuum desiccator showing the electric control circuit contained in a housing with the motor coupled to the trap and vacuum pump member.

FIG. **2**A is a side elevation and partial cross-sectional view of the desiccator cartridge of the present device, showing the interior chamber containing a trapping agent.

FIG. **2**B is a top plan and partial cross-section view of the desiccator cartridge showing the interior chamber containing alternative trapping agents and showing alternative moisture/fluid sensors for detecting fluid in flow path proximate the outlet port of the cartridge. Also shown is a separately mountable outlet microfilter.

FIG. **3** is a partial top plan view of the outlet port portion of the desiccator cartridge showing in phantom a micro-filter integral to the desiccator cartridge flow path, and also a vacuum pressure sensor mountable to the outlet port of the cartridge.

FIG. **4** is a cross-sectional view through a side elevation of a combination of a desiccator cartridge and vacuum pump head as an integral unit.

FIG. **5**A is a partial top plan view of the inlet portion of the desiccator cartridge showing the inlet port with a one-way gas/fluid flow valve installed.

FIGS. **5**B and **5**C are partial cross-sectional views of two types of one-way gas/liquid flow valves.

FIG. **6** is a block diagram of the electric control circuit of the desiccator device indicating its sub-circuits and the interconnect relationship with certain ancillary components.

FIGS. **7**A and **7**B show alternative strain-gauge means for monitoring vacuum pressure in the interior chamber of the desiccator cartridge.

FIG. **8** is a partial cross-section of a side elevation of a desiccator cartridge showing the interior components and their layout.

FIG. **9**A is an exploded view of a side elevation of a desiccator cartridge showing a cover member incorporating an integral gas flow channel.

FIG. **9**B is a bottom plan view of the cover member of FIG. **9**A illustrating an example of an integral gas flow channel layout (in phantom) and the perforations by which the integral channel is in gas flow communication with the interior chamber of the desiccator cartridge.

DETAILED DESCRIPTION OF THE INVENTION

The personally portable vacuum desiccator is a device useful as a source for providing a low vacuum pressure for removing excess wound exudate from dressed dermal wounds. This application of present personally portable vacuum desiccator is useful for promoting wound healing by draining such excess wound exudate from the wound site.

Referring now to the drawings, the details of preferred embodiments of the present invention are graphically and schematically illustrated. Like elements in the drawings are represented by like numbers, and any similar elements are represented by like numbers with a different lower case letter suffix.

As shown in FIG. **1**, the present invention is a personally portable vacuum desiccator **10** comprises a trap **12**, a vacuum pump member operable to provide a source of low vacuum pressure, an electric motive or drive means **36** for operating the vacuum pump member, and an electrical control circuit, including an electrical power source. The control circuit is electrically connected to the electric motive means to control its operation, i.e., to turn it on and off. The trap **12** includes a desiccator cartridge **14** The desiccator cartridge **14** has an interior chamber **16** containing a trapping agent **54** (see FIG. **2**). Additionally, the desiccator cartridge **14** has an inlet port **18** and an outlet port **20** in gas/liquid communication with the interior chamber **16** of the cartridge **14**. A vacuum pump head or member **22** serves as a source for a low pressure vacuum of about 250 mm Hg or less. The vacuum pump member **22** is placed after desiccant chamber **14** in the gas/liquid flow pathway to facilitate preventing fluid from entering the vacuum pump member. The vacuum pump head **22** has a low pressure port **24** and an exhaust port **26**. The low pressure port **22** is in gas/liquid flow communication with the outlet port **20** of the desiccator cartridge **14**. The exhaust port **26** of the vacuum pump head **22** is vented to atmosphere. When operated, the vacuum pump member **22** provides a low vacuum pressure to the interior chamber **16** of the desiccator cartridge. As further shown in FIG. **1**., an electric motive means **36** is in communication with the vacuum pump member **22** via a coupling **38**. The electric motive means **36** is a low voltage electric motor, which is operable to drive the vacuum pump member **22**, thus providing a low vacuum pressure at the pump member's low pressure port **24**. The electrical control circuit **40**, including an electrical power source **46**, is in electrical communication with the electric motive means **36** via an electric motor lead **42**. The control circuit **40** controls the operation of the electric motive means.

Optionally, a delivery tube **32** is included with the desiccator device **10** to put the trap **14** in gas/liquid flow communication with a location to which a low negative vacuum pressure is to be applied, such as a wound site covered by an occlusive dressing (not shown). The delivery tube **32** consists of a single passage gas/liquid flow path, having an input end **33** and an output end **24**, the output end **34** being connected to the inlet port **18** of the desiccator cartridge **14**.

The components of the personally portable vacuum desiccator **10** can further comprise a housing **50** for containing or mounting the component parts of the vacuum desiccator **10**. As exemplified in FIG. **1**, the housing **50** contains the electric motive means **26** and the electrical control circuit **40**. Alternatively, the housing **50** can contain the electric motive means **36**, the electrical control circuit **40** and additionally, the desiccator cartridge **14** and/or the vacuum pump member **22**.

The trap **12** comprises a desiccator cartridge **14**. As shown in FIGS. **2**A and **2**B, the desiccator cartridge **14** encloses an interior space or chamber **16**. The desiccator cartridge **14** is of a design and material construction to withstand the application of an appropriate vacuum without substantial collapse of the interior chamber **16**. Some distortion of the cartridge while under vacuum is desirable in some applications, e.g., where buffering of the vacuum pressure of the system is beneficial or distortion of the chamber **16** is used as an index of the vacuum pressure within the interior chamber **16**.

A trapping agent **54** is contained within the interior chamber **16** to retain (trap) fluids and moisture that enter the chamber **16**. There are a variety of compositions available in the art that are appropriate trapping agents for practice in the present invention. A specific composition or combination of compositions useful as the trapping agent **54** is readily selectable by one of ordinary skill in the art in view of the teaching herein and in consideration of the characteristics of the fluid to be trapped. Examples of classes of such compositions suitable as trapping agents **54** include desiccants, adsorbents, absorbents and the combination of any of these. Specific examples include silica gel, sodium polyacrylate, potassium polyacrylamide and related compounds. Such moisture trapping materials are often found in disposable baby diapers and in feminine napkins. These compositions may be particulate trapping agents **54***a* or fibrous trapping agents **54***b*. In a preferred embodiment, the trapping agent **54** was a pillow-like structure (see FIG. **8**), which included a fiber matrix material which served to contain and somewhat immobilize the other loose components of the trapping agent, and to act as a wick to distribute the fluid as it entered the interior chamber. The level of moisture in the interior chamber **16** proximate the outlet port **20** is monitored by a

moisture sensor **84** (see FIG. **1**). When the amount of moisture retained by the trapping agent **54** approaches saturation (as detected by the moisture sensor **84** or indicated by other means), the desiccator cartridge **14** may either be removed and disposed of or recharged with fresh desiccant material and repositioned in the device (depending on the design of the desiccator cartridge). Other means for detecting the degree of saturation of the trapping agent **54** are available. For example, the desiccant cartridge **14** may be constructed in part from a transparent material, allowing the trapping agent **54** to be directly observed. The degree of saturation of the trapping agent **54** maybe indicated by a color change in a component of the trapping agent **54** in response, for example, to a pH change or degree of hydration.

In a preferred embodiment of the vacuum desiccator **10**, all of the components in gas/liquid flow communication are replaceable. This allows the components of the device that are exposed to contact with the wound fluids to be separable from the other components of the device to facilitate cleaning or disposal of contaminated components. In particular, the desiccator cartridge **14** is removable from the device **10** and separately disposable. A fresh desiccator cartridge **14** is installed in the desiccator **10** to replace the removed cartridge. Alternatively, the cartridge **14** can be constructed to make its interior chamber **16** accessible, e.g., through a lid or by disassembly, whereby the used trapping agent **54** can be replaced with fresh. The refreshed desiccator cartridge may then be reattached to vacuum desiccator **10**. This feature may be useful where the desiccator cartridge and vacuum pump head are combined as a single integrated unit (see FIG. **4**).

The desiccator cartridge **14** has a single, gas/liquid flow pathway, which is the inlet port **18**, as the only inlet path into the trap **12**. The flow path at the inlet port **18** is unidirectional, in that gas/liquid flow can enter the trap via the inlet port **18**, but not exit or back flow out of the trap **14** via the inlet port **18**. Unidirectional flow at the inlet port is accomplished by a one-way valve **30** located proximate the inlet port **18** of the desiccator cartridge **14** (see FIG. **5**A). The one-way valve **30** prevents the contents of the desiccator cartridge **14** from back-flowing out of the inlet port **18**. The one-way valve **30** maybe separable from the desiccator cartridge **14**, as shown in FIG. **5**A, or it may be incorporated into the cartridge **14** proximate the inlet port **18** (not shown). One-way gas/liquid flow valves practicable in the present invention are known in the art and selectable by the ordinary skilled artisan for use in the present invention. Examples of such one-way valves include biased and/or unbiased piston-type **30***a* and ball-stop **30***b* valves as exemplified in FIGS. **5**B and **5**C.

A micro-filter **28** useful for blocking bacteria and/or untrapped moisture from passing into the vacuum pump member or from being vented to atmosphere is located in the gas/liquid flow path of the device **10** after the interior chamber **16** of the desiccator cartridge. The micro-filter **28** may be located proximate the outlet port **20** to protect the pump member **22** and/or proximate the exhaust port **26** to prevent venting bacteria (or moisture) to atmosphere. The micro-filter may be an in-line micro-filter **28***a* separate from the desiccator cartridge as shown in FIG. **2**B, or an integral micro-filter **28***b* incorporated into the cartridge **14** proximate the outlet port **20** as shown in FIG. **3**.

As shown in FIG. **1**, an electric motive means **36** is coupled to the vacuum pump member **22** of the vacuum desiccator **10**. In the preferred embodiment, the motive means **36** is an electric motor. Electric motors practicable in the present invention are known to and selectable by one of ordinary skill in the art in view of the teachings and figures contained herein. For example, a miniature, oil-less diaphragm pump is commercially available from the Gast Manufacturing, Inc. (Michigan): series 3D 1060, model 101-1028. The electric motor **36** communicates with the vacuum pump member **22** via a drive coupling **38** to drive the pump. The drive coupling **38** for connecting the motor **36** to the pump head **22** may be accomplished by any of a number of means known to and practicable by the ordinary skilled artisan. For example, a motor shaft coupling **38** maybe integrated with the vacuum pump head, i.e., the motor **36** and pump member **22** are substantially a single unit. Alternatively, a motor shaft coupling **38** may be mechanically coupled to the vacuum pump head **22** so as to be readily separable from the pump head **22**. For instance, as exemplified in FIG. **4**, the hub **100** of a rotary-vane pump head **22***a* has a motor shaft receiver **102** for accepting the end or spindle of a shaft coupling **38** of a motor **36**. The shaft receiver **102** has a threaded, keyed or similar interfacing configuration (not shown) complementary to the spindle or end of the shaft coupling **38** of the motor **36**. As a further alternative, the motor **36** maybe magnetically coupled (not shown) to the pump head **22** so as to again be readily separable from the vacuum pump member **22**. A readily separable motive means **36** is particularly useful where the vacuum pump member **22** and the desiccator cartridge **14** are integrated together as a unit, as shown in FIG. **4**.

As shown in FIG. **6**, the present vacuum desiccator device **10** includes an electrical control circuit **40** that comprises logic and switching circuits and a number of ancillary circuits and functions, external sensors, electrical connections and a power source. In the preferred embodiment, the purpose of the electrical control circuit **40** is to monitor the condition of the device **10** and to control operation of the motive means **36**. The ancillary circuits can be chosen for inclusion in an embodiment of the device **10** to affect one or more of the following functions: device data Input/Output, electrical power, sensor signal processing and motor control (power to the motor). An I/O unit **70** for accomplishing device data input and out put can include data input means such as a power and data entry switches (e.g., a key pad and/or on-off switch), and a readout display and alarms. Such I/O units **70** are well known in the art, and are readily practicable in the present invention by the ordinary skilled artisan. Other ancillary circuits and other sensors **88** may be provided at the user's option, and are similarly accomplishable by the ordinary skilled artisan.

In the preferred embodiment exemplified in FIG. **1**, the power source **46** for storing and providing electrical energy for the device **10** is a battery **60**. In the preferred embodiment, the power source **46** is removable from the electrical control circuit **40** and is easily replaceable. The POLAROID® P100 Polapulse™battery is an example of an appropriate battery **60** useful as a power source **46** in the present vacuum desiccator device **10** in a preferred embodiment because of its planar configuration and low profile. See FIGS. **7**A and **7**B.

It is intended that the electrical control circuit have sensory capabilities to detect certain physical conditions of the device **10**, and to utilize the conditions to control operation of the motor **36**, and other appropriate functions of the control circuit **40**. These ancillary sensory circuits include: a moisture sensor **84** and circuit, for detecting the presence of moisture proximate the outlet port **20** of the desiccant cartridge **14**; at least one vacuum pressure sensor **76** and circuit, for detecting a vacuum pressure in the interior

chamber or elsewhere in the device; and a pressure differential sensor circuit, for sensing a difference in pressure between two sections of the gas/liquid flow pathway of the device **10**, e.g., between the inlet and outlet ports **18** & **20** of the desiccator cartridge **14**. The sensors are interconnected to the control circuit **40** via electrical leads **44**. Sensors appropriate for accomplishing the various sensory functions of an electrical control circuit are known in the art and are readily adaptable for practice in the present invention by the ordinary skilled artisan. For example, a vacuum pressure sensor **76** (MPL model 500, diaphragm-type pressure differential sensor) suitable for practice in the present device is commercially available from Micro Pneumatic Logic, Inc. (Florida) from a line of pressure sensors. Other types of sensors are adaptable for use in the present invention for detecting or sensing pressure, such as surface strain gauges mounted on the surface of the desiccator cartridge **14**, and optical displacement gauges mounted to transmit light through the surfaces of desiccator cartridge **14**. For example, an optical fiber strain gauge **77** is commercially available from FISO Technologies (Quebec, model FOS "C" or "N") from a line of optical strain gauges. This sensor can be used to monitor and indicate the presence of a vacuum in the desiccator cartridge by displacement (bending) of the cartridge surface under the force of a vacuum in the interior chamber **16**. Optical displacement/strain gauges **78** are also commercially, including for the detection of fluid intrusion into a section of tubing. These gauges typically comprise a combination light source/detector **78***a* and a mirror **78***b*. Distortion of the surface of the desiccator cartridge **14** on which the mirror **78***b* is mounted alters the reflection path of the emitted light as it passes through the cartridge to return to the detector, which alteration is detectable. Of course, this requires the walls of the cartridge **14** proximate the optical displacement gauge **78** to be transparent to the light. The use of more than one pressure sensor **76** can allow sensing and/or measurement of the pressure differential between two different points in the gas/liquid flow pathway, such as between the inlet and outlet ports **18** & **20** of the desiccator cartridge **14**.

The vacuum pressure sensor **76** is used to monitor the vacuum pressure in the interior chamber **16** of the desiccator cartridge **14**. When the vacuum pressure detected in the chamber **16** by the pressure sensor **76** is sufficient, the electric control circuit **40** may switch off the motor **36**, thereby conserving electrical power. When the vacuum pressure detected in the chamber **16** by the pressure sensor **76** is no longer sufficient the control circuit **40** may switch on the motor **36** to reestablish an appropriate vacuum pressure in the interior chamber **16** of the desiccator cartridge **14**. Also, the electrical control circuit **40** can include a clock/timer circuit for intermittently operating the electric motive means **36**, as another way of conserving electrical power. The I/O unit **70** can be utilized to set the time interval for the control circuit's intermittent operation of the motor **36**.

In an alternative preferred embodiment of the vacuum desiccator **10**, the battery **60** of the power source **46** is integral with the desiccator cartridge **14***a*. As exemplified in FIG. **8**, the battery **60** is contained in a battery compartment **110**, which is integral to the structure of the desiccator cartridge **14***a*. Battery leads **112** connect the battery **60** to electrical battery contacts **114** on the exterior surface **120** of the desiccator cartridge **14***a*. In this embodiment, the desiccator cartridge **14***a* and battery **60** are replaceable as a unit.

FIG. **8** also illustrates another preferred feature of a desiccator cartridge **14**, in which a gas flow channel is disposed inside the interior chamber **16** of the cartridge **14***a*. In the embodiment illustrated, the flow channel **120** is a tube connected to the outlet port **20** and having a length sufficient to allow it to be coiled or snaked about the interior chamber **16** (also see FIG. **9**B). The flow channel tube **120** has perforations **122** along its length, or is otherwise constructed, to allow gas flow from the interior chamber **16** into the lumen of the flow channel tube **120** under the force of the vacuum pressure from the pump member **22**. Further shown in FIG. **8**, is trapping agent **54***c* having a pillow-like structure. The flow channel tube **120** is laid out on one side of the pillow trapping agent **54***c*. In the preferred embodiment, the pillow trapping agent **54***c* was constructed using 10 grams of sodium polyacrylate distributed between two layers of an elastic mesh material (nylon stocking). In addition to elastic mesh material, other fabrics are suitable for practice with the moisture trapping pillow **54***c*, including knitted fabric mesh materials like gauze and similar fabrics. To maintain even distribution of the sodium polyacrylate, the two layers of elastic mesh material were sewn together to form compartments. The volume of the interior chamber **16** of the desiccator cartridge **14** was sufficient to hold the pillow and about 50 cc of trapped moisture.

A flow channel may be accomplished by means other than a tube. For example, a flow channel may be integrated into the desiccator cartridge **14** and be in gas flow communication with the interior chamber **16**. This embodiment of a desiccator cartridge **14** can be accomplished as shown in FIGS. **9**A and **9**B, wherein the cartridge **14***b* has a cover member **124** and a body member **126** (FIG. **9**A). The cartridge cover member **124** has a gas flow channel **120***a* integrated into it. The integral flow channel **120***a* has perforations **122***a* along its length, or is otherwise constructed, to allow gas flow from the interior chamber into the lumen of the integral channel **120***a* under the force of the vacuum pressure from the pump member **22**.

While the above description contains many specifics, these should not be construed as limitations on the scope of the invention, but rather as exemplifications of one or another preferred embodiment thereof. Many other variations are possible, which would be obvious to one skilled in the art. Accordingly, the scope of the invention should be determined by the scope of the appended claims and their equivalents, and not just by the embodiments.

What is claimed is:

1. A personally portable vacuum desiccator comprising:

a moisture trap, the trap further comprising a desiccator cartridge having an interior chamber containing a trapping agent, and an inlet port and an outlet port in gas/liquid communication with the interior chamber;

a vacuum pump member having a low pressure port and an exhaust port, the low pressure port in gas/liquid flow communication with the outlet port of the desiccator cartridge and with the exhaust port vented to atmosphere, and the vacuum pump member being operable to provide a low vacuum pressure to the interior chamber;

an electric motive means in communication with the vacuum pump member and operative to drive the vacuum pump member; and

an electrical control circuit, including an electrical power source, the control circuit in electrical communication with and operative to control operation of the electric motive means;

wherein said personally portable vacuum desiccator is generally flat and may be worn unobtrusively by a user

and is adaptable for collecting and trapping liquid from a wound or incision on the user in said moisture trap.

2. The personally portable vacuum desiccator of claim **1**, further comprising a single passage gas/liquid flow path delivery tube, having an input end and an output end, the output end being connected to the inlet port of the desiccator cartridge.

3. The personally portable vacuum desiccator of claim **1**, further comprising a housing containing the electric motive means and the electrical control circuit.

4. The personally portable vacuum desiccator of claim **1**, further comprising a housing containing the electric motive means and the electrical control circuit and at least one additional element selected from the group consisting of the desiccator cartridge and the vacuum pump member.

5. The personally portable vacuum desiccator of claim **1**, wherein the vacuum pump member is integral with the desiccator cartridge.

6. The personally portable vacuum desiccator of claim **1**, wherein the electric motive means includes an electric motor mechanically coupled to the vacuum pump member.

7. The personally portable vacuum desiccator of claim **1**, wherein the electric motive means includes an electric motor magnetically coupled to the vacuum pump member.

8. The personally portable vacuum desiccator of claim **1**, wherein the electrical control circuit includes an electrical power source comprising a battery.

9. The personally portable vacuum desiccator of claim **1**, wherein the electrical control circuit includes an electrical power source comprising a battery, and the battery is removable from the electrical control circuit and replaceable.

10. The personally portable vacuum desiccator of claim **1**, further comprising a one-way valve disposed proximate the inlet port of the desiccator cartridge, the one-way valve preventing gas/liquid and particulate flow out of the inlet port.

11. The personally portable vacuum desiccator of claim **1**, wherein the electrical control circuit includes a moisture sensor for detecting the presence of moisture proximate the low pressure port of the vacuum pump member.

12. The personally portable vacuum desiccator of claim **1**, wherein the electrical control circuit includes a timer circuit for intermittently operating the electric motive means.

13. The personally portable vacuum desiccator of claim **1**, wherein the electrical control circuit includes a vacuum pressure sensor for detecting a vacuum pressure in the interior chamber of the desiccator cartridge.

14. The personally portable vacuum desiccator of claim **1**, wherein the electrical control circuit includes a pressure differential sensor for sensing a difference in pressure between the inlet and outlet ports of the desiccator cartridge.

15. The personally portable vacuum desiccator of claim **1**, wherein the desiccator cartridge is removable from the vacuum desiccator and replaceable.

16. The personally portable vacuum desiccator of claim **1**, wherein components in gas/liquid flow communication are replaceable.

17. The personally portable vacuum desiccator of claim **1**, wherein the desiccator cartridge contains a trapping agent selected from the group consisting of: a desiccant, an adsorbent and an absorbent.

18. The personally portable vacuum desiccator of claim **1**, further comprising a micro-filter positioned after the outlet port of the desiccator cartridge and before the exhaust port of the vacuum pump member, the micro-filter blocking the passage of bacteria.

19. The personally portable vacuum desiccator of claim **1**, wherein the power source is integrally combined with the desiccator cartridge, and the combined desiccator-power source being installable in and removable from the vacuum desiccator as a single unit.

20. A personally portable vacuum desiccator comprising:

a desiccator cartridge, the cartridge being removable from the vacuum desiccator and replaceable, and having an interior chamber containing a trapping agent, the trapping agent being a moisture tapping pillow, and an inlet port and an outlet port in gas/liquid communication with the interior chamber, and a one-way valve disposed proximate the inlet port for preventing gas/liquid and particulate flow out of the inlet port;

a single passage gas/liquid flow pathway having an input end and an output end, the output end being connected to the inlet port of the desiccator cartridge;

a vacuum pump member having a low pressure port and an exhaust port, the low pressure port in gas/liquid flow communication with the outlet port of the desiccator cartridge and with the exhaust port vented to atmosphere, and the vacuum pump member being operable to provide a low vacuum pressure to the interior chamber;

an electric motive means in communication with the vacuum pump member and operative to drive the vacuum pump member, the electric motive means including an electric motor coupled to the vacuum pump member; and

an electrical control circuit, including an electrical power source, the control circuit in electrical communication with and operative to control operation of the electric motive means, the electrical power source comprising a battery, with the battery being removable from the electrical control circuit and replaceable, and wherein the electrical control circuit includes one or more ancillary circuits selected from the group consisting of: a power circuit for turning the electrical control circuit on and off, a moisture sensor for detecting the presence of moisture proximate the low pressure port of the vacuum pump member, a timer circuit for intermittently operating the electric motive means, a vacuum pressure sensor for detecting a vacuum pressure in the interior chamber of the desiccator cartridge, a pressure differential sensor for sensing a difference in pressure between the inlet and outlet ports of the desiccator cartridge.

21. A personally portable vacuum desiccator for draining and collecting excess fluid from a wound ox incision on a user, said vacuum desiccator comprising;

a thin moisture trap having a fluid trapping agent, an inlet port, and an outlet port;

a delivery tube having a first end positionable in gas/liquid flow communication with the wound or incision on the user and a second end in gas/liquid flow communication with said inlet port;

a vacuum pump in gas/liquid flow communication with said outlet port;

an electric motor operably connected to said vacuum pump; and

a control circuit in electrical communication with said motor, said control circuit having an electric power source and being operable for controlling the operation of said motor;

said vacuum desiccator being transportable upon the user's person

said vacuum pump being operable to draw fluid from the wound or incision through said delivery tube and into said moisture trap;

said fluid trapping agent having a capacity for trapping a volume of the fluid.

22. The personally portable vacuum desiccator of claim **21** wherein said delivery tube comprises a single passage gas/liquid flow path.

23. The personally portable vacuum desiccator of claim **21** wherein:

said moisture trap comprises a desiccator cartridge having an interior chamber;

said interior chamber having a gas flow channel and said fluid trapping agent disposed therein;

said gas flow channel being connected to said outlet port.

24. The personally portable vacuum desiccator of claim **23** wherein said gas flow channel comprises a second tube having perforations therein.

25. The personally portable vacuum desiccator of claim **24** wherein said second rube is arranged in a configuration selected from the group consisting of coiled and snaked.

26. The personally portable vacuum desiccator of claim **23** wherein said desiccator cartridge comprises a cover member and a body member, said gas flow channel being integrated into said cover member.

27. The personally portable vacuum desiccator of claim **21** further comprising a one-way valve proximate said inlet port to prevent gas/liquid flow out of said moisture trap through said inlet port.

28. The personally portable vacuum desiccator of claim **21** further comprising a micro-filter proximate said outlet port to prevent bacteria or moisture from leaving said moisture tap through said outlet port.

29. The personally portable vacuum desiccator of claim **21** further comprising a moisture sensor proximate said outlet port and in communication wit said control for controlling said motor in response to the detection of moisture proximate circuit said outlet port.

30. The personally portable vacuum desiccator of claim **21** further comprising a vacuum pressure sensor for detecting the vacuum pressure within said moisture trap, said vacuum pressure sensor being in communication with said control circuit for controlling said motor in response to said vacuum pressure.

31. The personally portable vacuum desiccator of claim **21** further comprising a pressure differential sensor for detecting the pressure differential between said inlet port and said outlet port, said pressure differential sensor being in communication with said control circuit for controlling said motor in response to said pressure differential.

32. The personally portable vacuum desiccator of claim **21** wherein said volume is about 50 cc.

33. The personally portable vacuum desiccator of claim **21** wherein said fluid tapping agent is selected from the group consisting of desiccants, adsorbent; and absorbents.

34. The personally portable vacuum desiccator of claim **21** wherein said moisture trap has a generally rectangular shape.

* * * * *