United States Patent [19]

Phillips et al.

[11] **Patent Number: 4,569,674**

[45] **Date of Patent: Feb. 11, 1986**

[54] **CONTINUOUS VACUUM WOUND DRAINAGE SYSTEM**

[75] Inventors: **Earl G. Phillips**, Kalamazoo; **Robert W. Insalaco**, Climax; **William M. Booth, III**, Paw Paw, all of Mich.

[73] Assignee: **Stryker Corporation**, Kalamazoo, Mich.

[21] Appl. No.: **404,791**

[22] Filed: **Aug. 3, 1982**

[51] **Int. Cl.**[4] **A61M 1/00**

[52] **U.S. Cl.** **604/119**; 604/319; 604/322

[58] **Field of Search** 604/118, 119, 120, 126, 604/127, 122, 131, 317–320, 322, 323, 326, 327, 47, 73, 48, 50, 4–6; 128/760, 762, 5, 6; 417/9

[56] **References Cited**

U.S. PATENT DOCUMENTS

3,363,626	1/1968	Bidwell et al.	604/151
3,545,440	12/1970	Mishkin et al.	604/321
3,572,340	3/1971	Lloyd et al.	604/133
3,675,653	7/1972	Crawley et al.	604/120
3,993,062	11/1976	Jess	604/126
4,178,932	12/1979	Ryder et al.	604/118
4,184,510	1/1980	Murry et al.	604/30
4,256,109	3/1981	Nichols	604/320
4,261,360	4/1981	Perez	604/118
4,296,748	10/1981	Kurtz et al.	128/762
4,306,558	12/1981	Kurtz et al.	604/73
4,345,342	8/1982	Saito	128/762
4,392,858	7/1983	George et al.	604/126
4,395,258	7/1983	Wang et al.	604/119

FOREIGN PATENT DOCUMENTS

2058227 4/1981 United Kingdom .

OTHER PUBLICATIONS

WO80/02706 PCT Goldberg et al. 12/80.

Primary Examiner—Lee S. Cohen
Assistant Examiner—Steven Falk
Attorney, Agent, or Firm—Flynn, Thiel, Boutell & Tanis

[57] **ABSTRACT**

A continuous vacuum drainage system for wound drainage. A base unit has apparatus responsive to releasable attachment thereto of a drain reservoir for evacuating the reservoir to a subatmospheric pressure in a predetermined range. The drain reservoir is continuously operable before, during and after release from the base unit for uninterrupted suction draining of a wound.

32 Claims, 15 Drawing Figures

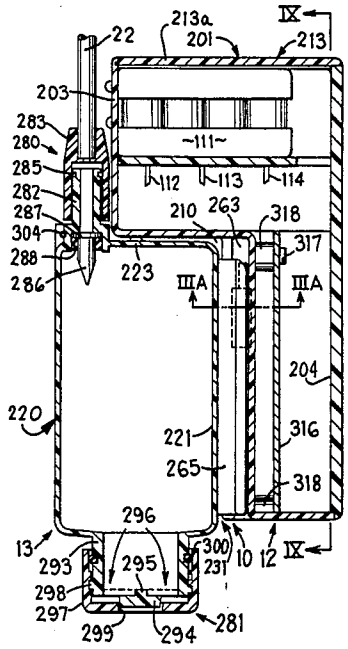

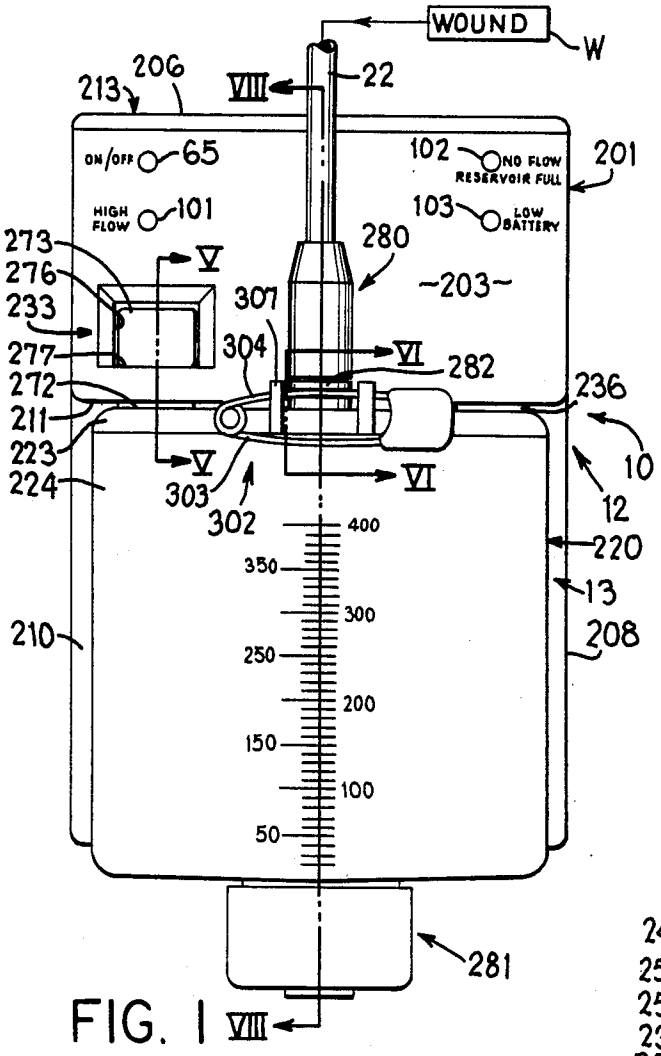

FIG. 1

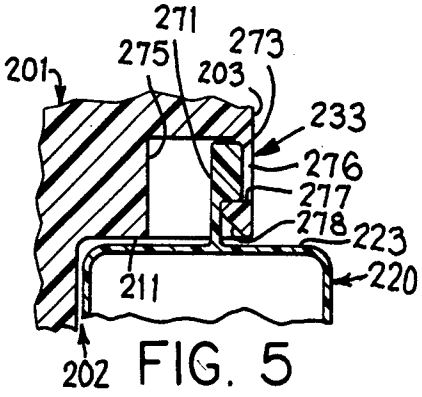

FIG. 5

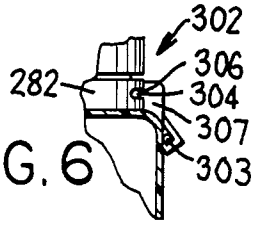

FIG. 6

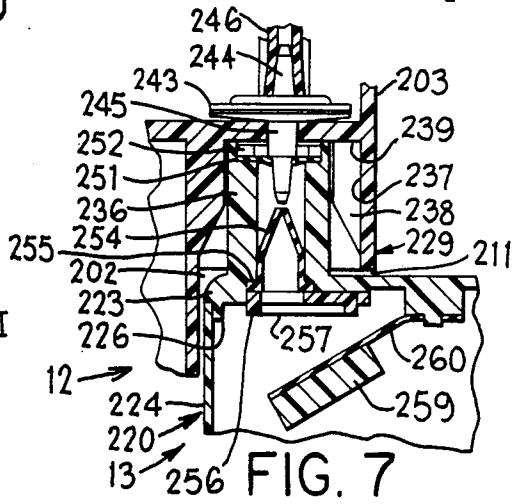

FIG. 7

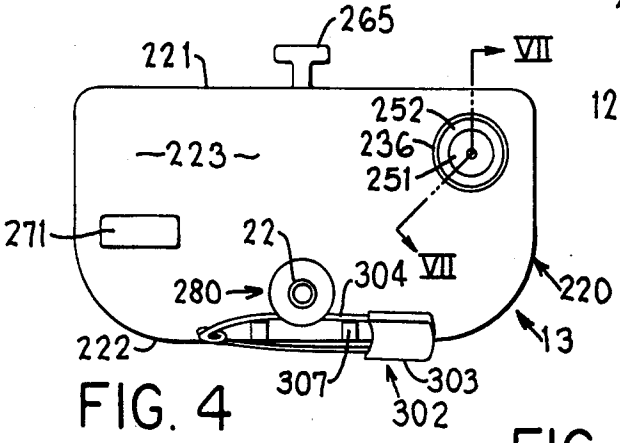

FIG. 4

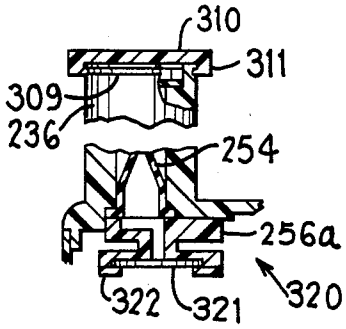

FIG. 7A

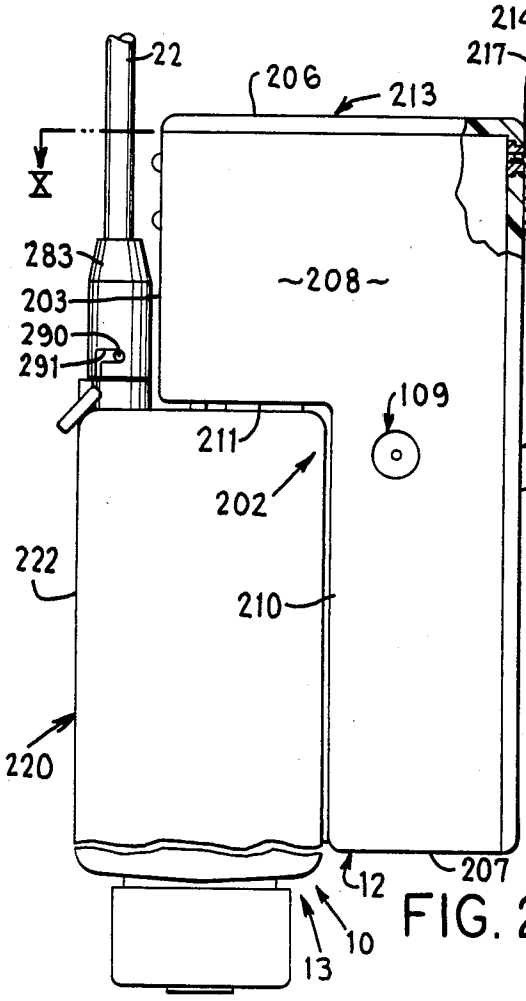

FIG. 2

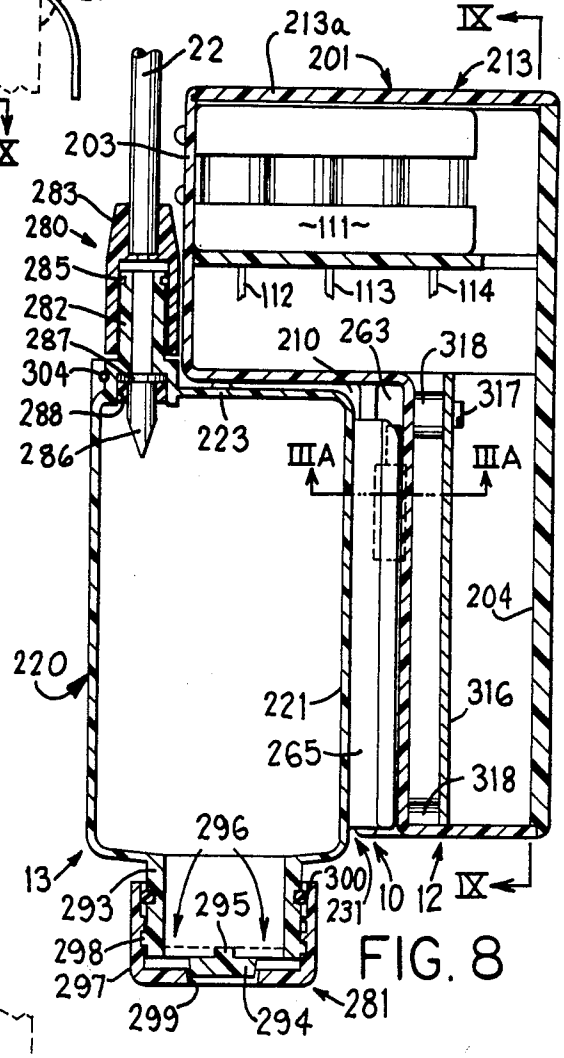

FIG. 8

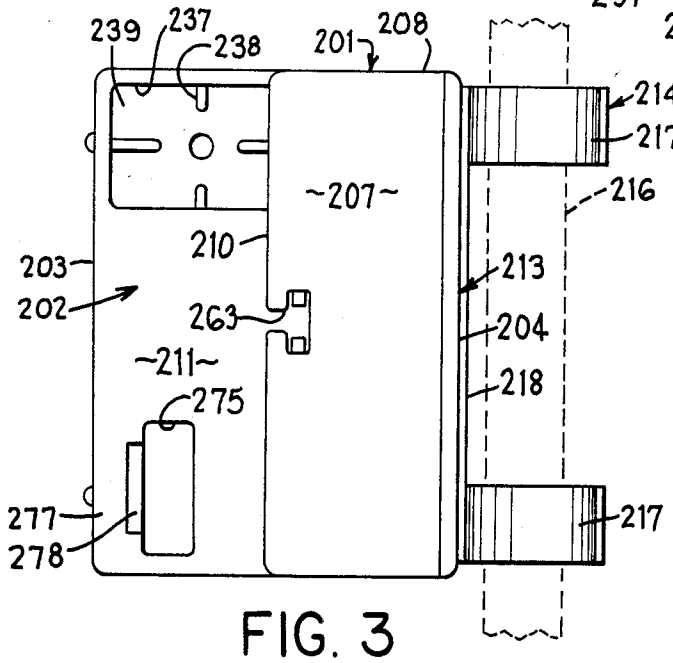

FIG. 3

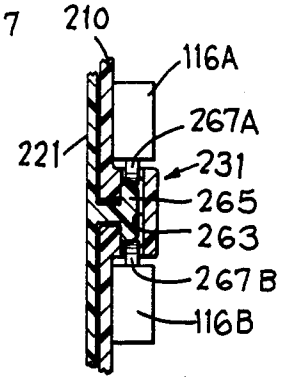

FIG. 3A

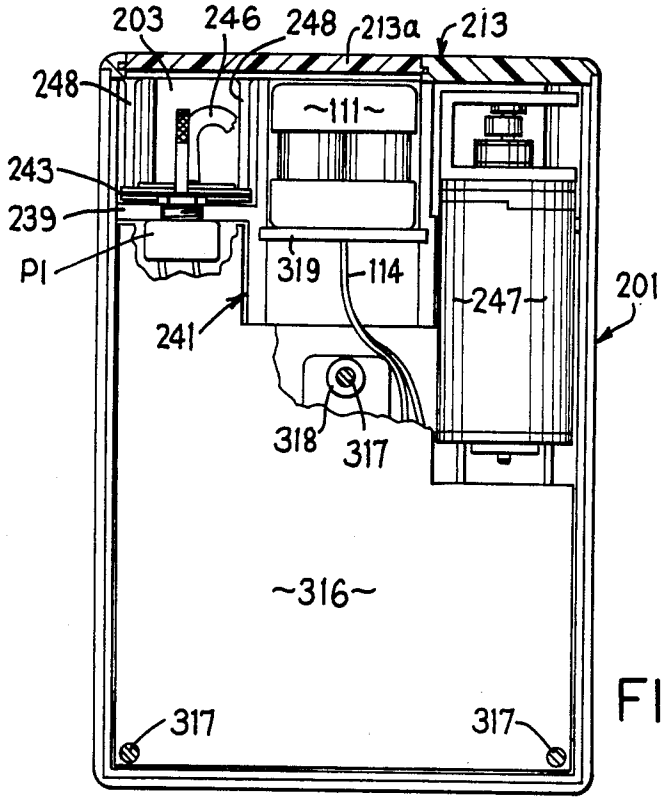
203
246
248
213a
213
248
~111~
243
239
PI
319
114
~247~
201
241
318
317
~316~
317
317

FIG. 9

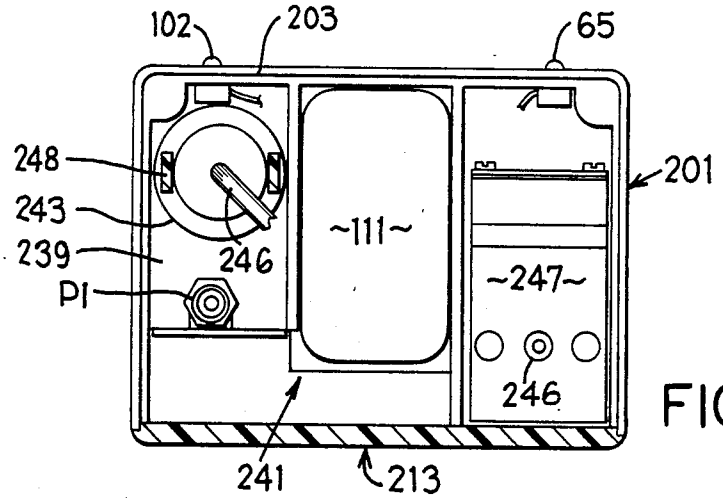
102
203
65
248
243
239
PI
246
~111~
201
~247~
246
241
213

FIG. 10

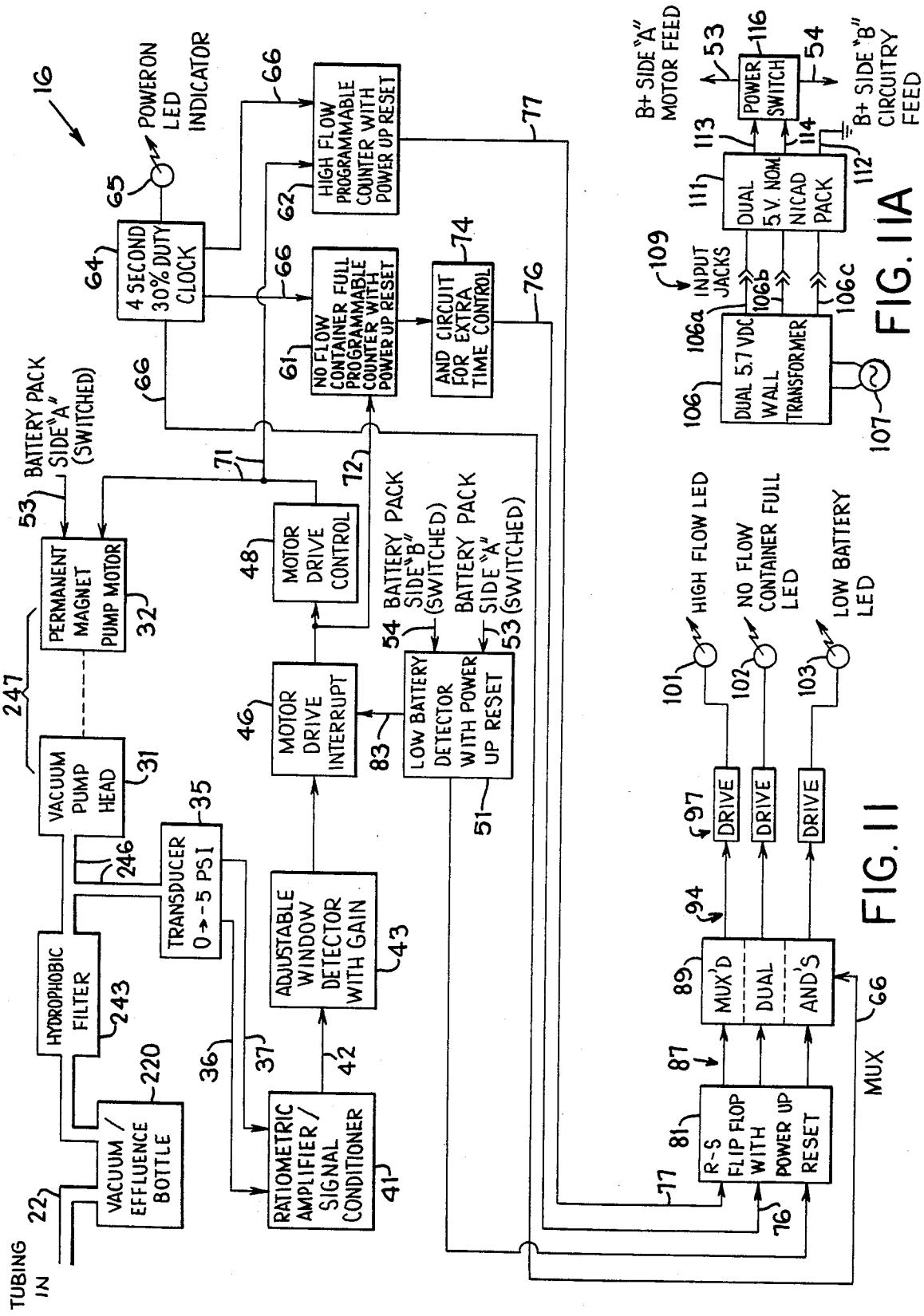
16
POWER ON LED INDICATOR
65
4 SECOND 30% DUTY CLOCK
64
66
HIGH FLOW PROGRAMMABLE COUNTER WITH POWER UP RESET
62
NO FLOW CONTAINER FULL PROGRAMMABLE COUNTER WITH POWER UP RESET
61
AND CIRCUIT FOR EXTRA TIME CONTROL
74
76
77
BATTERY PACK SIDE "A" (SWITCHED)
53
PERMANENT MAGNET PUMP MOTOR
32
247
VACUUM PUMP HEAD
31
246
HYDROPHOBIC FILTER
243
VACUUM / EFFLUENCE BOTTLE
220
22
TUBING IN
TRANSDUCER 0→-5 PSI
35
36
37
RATIOMETRIC AMPLIFIER / SIGNAL CONDITIONER
41
42
ADJUSTABLE WINDOW DETECTOR WITH GAIN
43
MOTOR DRIVE INTERRUPT
46
MOTOR DRIVE CONTROL
48
71
72
BATTERY PACK SIDE "B" (SWITCHED)
54
BATTERY PACK SIDE "A" (SWITCHED)
53
LOW BATTERY DETECTOR WITH POWER UP RESET
83
51
B+ SIDE "A" MOTOR FEED
53
POWER SWITCH
116
54
B+ SIDE "B" CIRCUITRY FEED
113
114
112
DUAL 5 V. NOM NICAD PACK
111
109
INPUT JACKS
106a
106b
106c
DUAL 5.7 VDC WALL TRANSFORMER
106
107
FIG. 11A
HIGH FLOW LED
101
NO FLOW CONTAINER FULL LED
102
LOW BATTERY LED
103
DRIVE
97
94
MUX'D
DUAL
AND'S
89
87
R-S FLIP FLOP WITH POWER UP RESET
81
MUX
FIG. 11

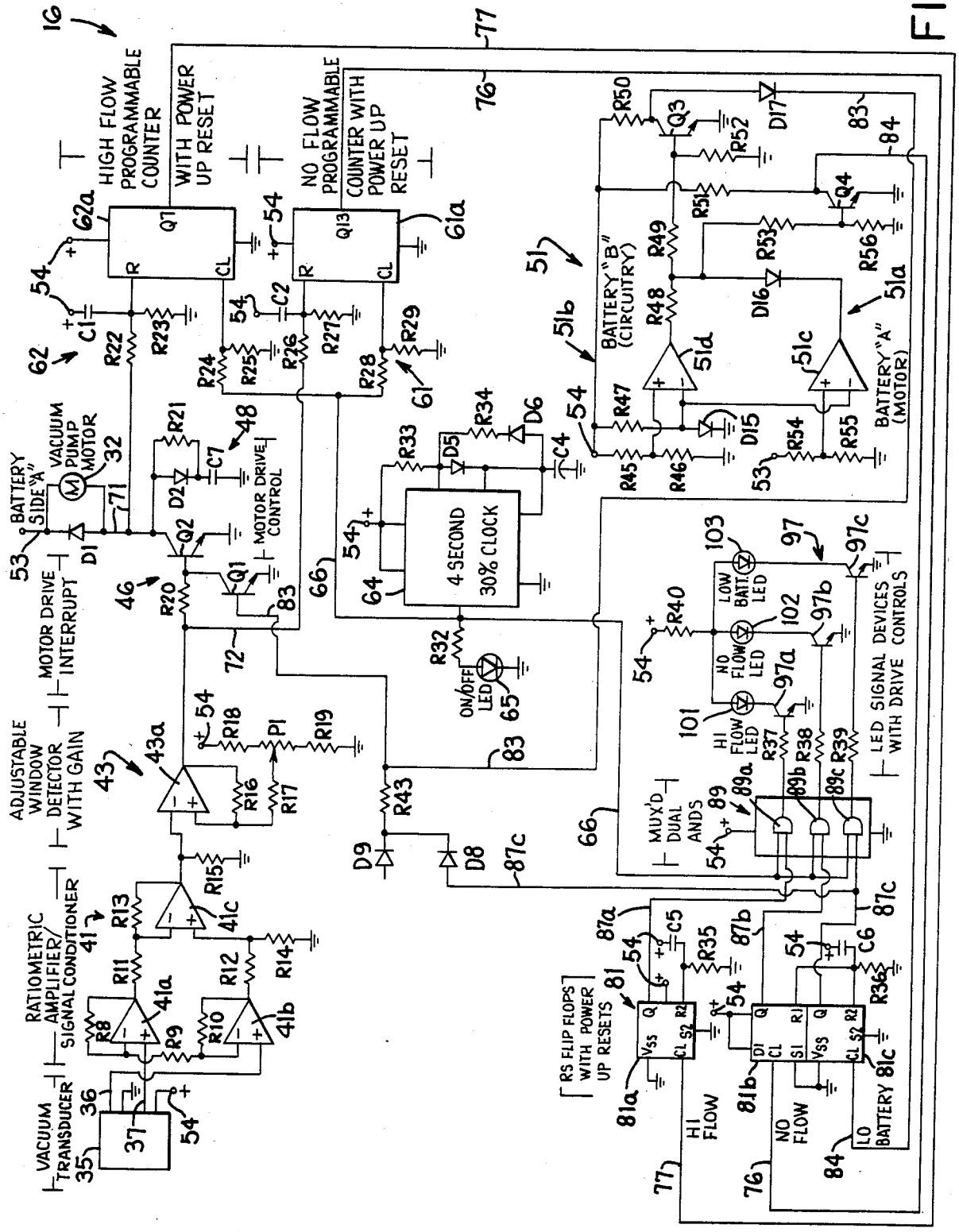
HIGH FLOW PROGRAMMABLE COUNTER WITH POWER UP RESET
NO FLOW PROGRAMMABLE COUNTER WITH POWER UP RESET
BATTERY "B" (CIRCUITRY)
BATTERY "A" (MOTOR)
BATTERY SIDE "A"
VACUUM PUMP MOTOR
MOTOR DRIVE CONTROL
MOTOR DRIVE INTERRUPT
ADJUSTABLE WINDOW DETECTOR WITH GAIN
RATIOMETRIC AMPLIFIER/ SIGNAL CONDITIONER
VACUUM TRANSDUCER
4 SECOND 30% CLOCK
ON/OFF LED
LOW BATT LED
NO FLOW LED
HI FLOW LED
LED SIGNAL DEVICES WITH DRIVE CONTROLS
MUX'D DUAL ANDS
RS FLIP FLOPS WITH POWER UP RESETS
HI FLOW
NO FLOW
LO BATTERY

FIG. 12

CONTINUOUS VACUUM WOUND DRAINAGE SYSTEM

FIELD OF THE INVENTION

This invention relates to a vacuum drainage system for wounds, and more particularly to such system having a reservoir connectible to the wound for receiving drainage fluid therefrom and apparatus for applying a negative pressure to the reservoir.

BACKGROUND OF THE INVENTION

It has long been known to drain unwanted liquid from a wound by means of a tube connected to a closed container, the interior of which is under a partial vacuum, that is, a subatmospheric or negative pressure.

In one type of prior apparatus, the drainage container is provided with a wall or walls manually deflectable inward for reducing the effective volume within the container and resilient means for oppositely deflecting such wall or walls to expand the internal volume of the container and thereby establish a negative pressure therein for drawing liquid from the wound. In some instances, these units have been made compact and light weight enough to be secured to and carried by an ambulatory patient, for example after surgery to continue drainage of the healing wound. One example is disclosed by Lloyd U.S. Pat. No. 3,572,340. However, such devices typically do not provide precise control of maximum negative pressure since the degree of inward deflection may vary widely among different users or may not be clearly or reliably related to developed maximum negative pressure. This risks excessive negative pressure when the device is used in connection with a slow draining wound in relatively delicate tissue or ineffectual suction when the device is used to drain thicker liquids from a wound in relatively heavy muscle tissue. Moreover, such prior devices are operable only for a relatively short time in that the device may pass quickly through the desired range of negative pressures prior to completely filling with drained liquid material and hence require frequent changing or emptying, resulting in waste of limited available nursing time.

On the other hand, prior drainage devices of another kind may more closely maintain negative pressure within a drain container in a relatively narrow negative pressure range and may be capable of continuous operation over a relatively long time without need to deform the container or otherwise manually reactivate the negative pressure source. One example is shown in Crowley U.S. Pat. No. 3,675,653. However, systems of this kind have generally been relatively bulky and hence have confined the patient to close proximity to a stationary vacuum pump and control.

Accordingly, prior systems of which we are aware have not been satisfactory for providing precisely controlled, continuous vacuum wound drainage for a patient starting in the operating room with closing of a surgical procedure, and continuing during transport of the patient from operating room to recovery room, while in the recovery room, during transfer to the hospital room, while in his hospital bed, and during subsequent travel by wheelchair or on foot around or out of his hospital room.

Accordingly, the objects and purposes of this invention include provision of a continuous vacuum wound

drainage system intended to overcome disadvantages such as those set forth above.

The objects and purposes of this invention are met by providing a continuous vacuum drainage system for wound drainage including a drain reservoir, a base unit having means responsive to releasable attachment thereto of such a drain reservoir for evacuating such reservoir to a subatmospheric pressure in a predetermined range, and wherein the drain reservoir has means continuously operable before, during and after release from the base unit for uninterrupted suction draining of a wound.

Other objects and purposes of this invention will be apparent to persons acquainted with apparatus of this general type upon reading the following specification and inspecting the accompanying drawings.

BRIEF DESCRIPTION OF THE DRAWINGS

FIG. **1** is a front view of a continuous vacuum wound drainage system embodying the invention, with the reservoir installed in a position of use on the base unit.

FIG. **2** is a partially broken side view of the apparatus of FIG. **1**.

FIG. **3** is a bottom view of the apparatus of FIG. **2**.

FIG. **3A** is a fragmentary sectional view substantially as taken on the line IIIA—IIIA of FIG. **8** hereafter described.

FIG. **4** is a top view of the reservoir of FIG. **1**.

FIG. **5** is a diagrammatic cross-sectional view substantially taken on the line V—V of FIG. **1**.

FIG. **6** is a fragmentary side view of the upper forward portion of the reservoir substantially taken on the line VI—VI of FIG. **1**.

FIG. **7** is a fragmentary sectional view of the vacuum connection assembly substantially as taken on the line VII—VII of FIG. **4**.

FIG. **7A** discloses a modification of the vacuum connection assembly boss portion of the receptacle of FIG. **7**.

FIG. **8** is a central cross-sectional view substantially as taken on line VIII—VIII of FIG. **1**.

FIG. **9** is a partially broken sectional view substantially taken on the line IX—IX of FIG. **8**.

FIG. **10** is a partially broken top view substantially taken on the line X—X of FIG. **2**.

FIG. **11** is a block diagram of the control circuitry of the system of FIG. **1**.

FIG. **11A** is a block diagram of the power supply portion of the control circuitry for applying DC operating potential to the FIG. **11** apparatus.

FIG. **12** is a circuit diagram corresponding in content to the block diagram of FIG. **11** and disclosing the control circuitry in more detail.

DETAILED DESCRIPTION

FIGS. **1** and **2** disclose a continuous vacuum drainage system **10** for draining of a closed wound. The system **10** includes a portable drain reservoir **13** and a base unit **12** to which the reservoir is releasably securable for partial evacuation to a subatmospheric (negative) pressure. A wound drain tube **22** is used to connect the reservoir **13** to a wound W to be drained. The reservoir **13** is disconnectible from the base unit **12** without such disconnection impairing the negative pressure within the reservoir. Thus, the reservoir **13** can be used for vacuum wound drainage both while connected with the base unit **12** as shown in FIGS. **1** and **2** as well as after disconnection from the base unit, thus permitting the

reservoir to be carried by the patient or on a mobile patient support (not shown) to locations remote from the base unit **12**.

The base unit **12** comprises a housing **201** (FIGS. **1**, **2** and **3**) which in the preferred embodiment housing **201** has a forwardly and downwardly facing recess **202** (FIGS. **2** and **3**) into which the reservoir **13** is insertable. The housing **201** is conveniently rectilinear, except for the recess **202**, and comprises front and back walls **203** and **204**, top and bottom walls **206** and **207** and side walls **208**. The recess **202** has forward and downward facing walls **210** and **211**. The top and rear walls **206** and **204** conveniently together form a cover **213** (FIGS. **2** and **8**) removable from the remainder of the housing to allow access to the interior. Cover **213** is releasably fixed to the remainder of the housing **201** by any conventional means, such as screws, not shown. Housing **201** is preferably of a molded plastics material.

An attachment bracket **214** (FIG. **2**) is fixed to the housing **201**, as by screws **215** for removably supporting the housing on a support indicated in broken lines at **216**, for example a fixed support in a hospital or operating room, or a rail or other part on a semi-mobile or mobile patient carrier, such as a hospital bed, gurney, or wheelchair. Bracket **214** preferably comprises a pair of downwardly opening hooks **217** spaced at opposite ends of and extending upward from a mounting plate **218** secured by the screws **215** to the upper edge of housing back **204** to pendantly support the housing **201**.

The drain reservoir **13** comprises a hollow bottle **220** (FIGS. **1**, **4** and **8**) having a back wall **221** complimentary to the forwardly facing recess wall **210** and hence flat in the embodiment shown. The bottle **220** is conveniently approximately rectilinear and is received in the housing recess **202** with its front wall **222** spaced forwardly from the front wall **203** of the housing, as seen in FIG. **2**, to provide room for the wound drain tube **22** and means (hereinafter described) connecting same to the bottle.

The reservoir **13** may be manufactured in any convenient manner. To simplify manufacture and permit parts thereof, such as described hereafter with respect to FIG. **7**, to be provided within the bottle **220**, the bottle **220** may be assembled from a separate top **223** fixedly sealed to a cup-shaped bottom **224**, as by the overlapped joint **226** (indicated only at the left in FIG. **7** but extending circumferentially around the top **223** and bottom **224**) fixedly as by adhesive or heat.

Insertion of the reservoir **13** into the recess **202** of housing **12** interengages the two by means of a vacuum connection assembly **229** (FIG. **7**) through which the base unit provides the reservoir with a negative pressure, and by means of mounting structure for supporting the reservoir on the housing. Such mounting structure includes a single motion guide assembly **231** (FIGS. **3A** and **8**) for guiding the reservoir properly into position on the housing, and a latch assembly **233** (FIGS. **1** and **5**) for releasably fixing the reservoir in supported relation on said housing. In the preferred embodiment shown, the vacuum connection assembly **229**, guide assembly **231** and latch assembly **233** are all arranged for straight line upward insertion of the reservoir **13** into the recess **202** of the base unit **12**.

The vacuum connection assembly **229** (FIG. **7**) includes a hollow cylindrical boss **236** extending upward from the right (FIGS. **1** and **4**) rear corner portion of the bottle top **223**. A pocket **237** (FIGS. **3** and **7**) opens downward through the downward facing wall **211** of the housing into recess **202** and has taper-ended vertical guide ribs **238** fixed therein to snugly guide the upper end of the boss **236** of the bottle upward against, or substantially against, the upper end **239** of the pocket **237**, and such that the top **223** of the bottle lies just beneath the overhanging, downwardly facing wall **211** of the housing. The pocket upper end **239** here defines a shelf which, conveniently, is formed as part of a shelf assembly **241** (FIGS. **9** and **10**) preferably molded integrally with the front wall **203** of the housing **201**, as seen in FIGS. **9** and **10**.

A commercially available, disklike, hydrophobic filter unit **243** (FIG. **7**) rests atop the shelf **239** and has an upwardly protruding hollow stem **244** connected through a vacuum hose **246** to a motor driven vacuum pump unit **247** (FIGS. **9** and **10**) preferably fixed on a further portion of the shelf assembly **241** within the housing. The filter unit **243** is releasably held on the shelf **239** by any convenient means, here by a pair of legs **248** fixedly depending from the removable housing top wall.

The filter unit **243** also has a depending hollow stem **245** (FIG. **7**). Stem **245** extends downward through an opening in the housing shelf **239** and thence sealingly through an annular resilient membrane **251** (here of latex or the like) held in the stepped upper end of the boss **236** by a conventional resilient friction ring **252** to seal the vacuum connection from the interior of the hollow boss **236**, through the filter unit **243** to the vacuum pump **247**.

A one-way valve **254** in the hollow boss **236** beneath stem **245** in the preferred embodiment shown is of the commercially available reflux, or "duck-bill" type. The one-way valve **254** is oriented for evacuation of gas upward from the reservoir by the vacuum pump unit **247** but closes upon shutting off or disconnection of the vacuum pump for preventing backflow of air or the like therethrough into the bottle **220**. A conventional duck-bill valve **254** has an upstanding tubular central portion, opposite sides of which are pre-biased to flatten and converge toward the top of the valve to form a slit normally resiliently closed to block downward flow therethrough but resiliently openable to allow upward flow therethrough. The bottom of the duck-bill valve **254** is flanged at **255** to seat in the stepped bottom of the boss **236**. A perforated retainer **256** is fixed, as by adhesive bonding, beneath the top **223** of the bottle to retain the valve **254**, normally to allow upward gas flow from the bottle interior through the valve **254** to the vacuum pump, and also to provide a downward facing seat **257**. A float valve **259** comprises a floating body (for example of closed pore, rigid plastic foam) hinged by a flexible leaf **260** of plastic film on the underside of the bottle top **223**, to lift up and seal against the perforated retainer **256** and prevent overflow should liquid in the bottle rise to near the top.

Downward movement of the reservoir **13** out of engagement with the base unit **12** pulls the boss **236** out of the pocket **237** and thereby removes the hollow stem **245** from the membrane **251** to disconnect the vacuum pump **247** from the bottle **220**. However, the partial vacuum, or negative pressure, in the bottle remains due to closure of the one-way valve **254**.

The guide assembly **231** (FIGS. **3A** and **8**) comprises an undercut slot **263** formed, as by molding, in the forwardly facing wall **210** of the housing recess **202**. The slot **263** is preferably centrally located on the forwardly facing wall **210** and extends vertically from top to bot-

tom thereof. A T-cross-section rail is fixed, preferably by molding, to the back wall **221** of the bottle **220** as seen in FIG. **4**, and is snugly but upwardly slidably receivable in the undercut slot **263** of the housing to guide the bottle **220** upward into the housing recess **202** and guide the boss **236** upward into the pocket **237**. The T-rail **265** preferably extends vertically substantially the full height of the bottle **220** and is preferably centered laterally on the back wall **221** thereof. The T-rail **265** and the surfaces defining the undercut slot **263** may be chamfered at their respective upper and lower ends to facilitate entry of the top of the T-rail into the bottom of the undercut slot.

To sense the insertion of the reservoir **13** into the base unit **12** and to control application of electric power to components (such as the vacuum pump **247**) within the housing **201**, a power switch unit **116** (FIG. 3A) here comprises individual on-off switches **116**A and **116**B actuable to a conductive state by insertion of the reservoir **13** into the base unit **12**. In the embodiment shown, switches **116**A and **116**B are fixed on the interior side of the forwardly facing recess wall **210** near the top thereof and have respective actuators **267**A and **267**B extending through openings in the housing wall into the undercut slot **263** for displacement by the top of the T-rail **265** during the last of its rise along the undercut slot **263**. Positioning of the switch actuators **267**A and **267**B within the undercut slot **263** minimizes risk of switch actuation by tampering or unintended touching, when no reservoir is in place on the housing. Suitable seal means, not shown, may be provided where the mechanical switch actuators **267**A and **267**B protrude through the housing wall into the undercut slot **263**.

While mechanically actuated switches are shown for illustrative purposes, switches of other types may be used, for example, proximity switches, such as magnetically operated reed switches actuated by magnetized means on the T-rail **265**, or optical or other nonmechanically operated switches. Use of a nonmechanically operated switch at **116**A and **116**B eliminates the need for any perforation through the wall of the housing and hence any need for a seal thereat.

The latch assembly **233** (FIGS. **1**, **3** and **5**) includes a manually releasable snap-type structure pendantly supporting the bottle **220** snugly beneath the downward facing wall **211** of the housing recess **202**. The latch assembly **233** here includes an upstanding deflectable member **271** generally of L-shaped cross section as seen in elevation in FIG. **5**. The member **271** has a resiliently rearwardly deflectable first leg **272** upstanding from and fixed (preferably by integral molding therewith) to the top **223** of bottle **220**. The deflectable leg **272** is thin from front to rear as seen in FIG. **5** and substantially wider from side to side as seen in FIG. **1**, to permit rearward deflection of the top of the member **271** rearwardly. The top leg **273** extends forwardly from the top of deflectable leg **272** and is considerably taller and wider than its front-to-rear thickness. The deflectable member **271** is spaced along the top of the bottle from both the boss **236** and the axis of drain tube **22** as seen in FIG. **4**.

An opening **275** opens through the downward facing wall **211** of the housing **201** near the housing front wall **203**. The top portion of the opening **275** opens forwardly through the housing front wall **203** to form a finger access port **276**. The bottom of port **276** is closed by a transversely extending portion of the housing front wall, namely a ledge **277** on the flat top of which the forward facing top leg **273** of the member **271** rests to latch the bottle **220** in pendantly supported relation on the housing **201**. Inserting a human finger through the port **276** shifts top leg **273** rearwardly in the opening **275** and off the ledge **277**, thereby unlatching the bottle **220** and allowing it to drop from the housing **221**. Upward insertion and latching of the bottle **220** with respect to the housing **201** is facilitated by a sloped camming surface **278** on the underside of the ledge **277** which rearwardly deflects the top leg **273** upon upward movement of the deflectable member **271** into the opening **275**, until the bottle **220** has substantially completed its upward motion into the housing recess **202**, at which point the upper leg **273** moves fully upward past the ledge **277** and snaps forward, due to its inherent resiliency, into its FIG. **5** latching position.

Turning now to portions of the reservoir **13** engaged by liquid drained from wound W, same include a wound drain port **280** (FIGS. **1** and **8**) at which the wound drain tube **22** is releasably connectible to the top of the bottle **220**, and a bottle emptying port **281** at the bottom of the bottle for emptying of liquid collected from the wound.

The wound drain port **280** comprises an internally and externally stepped hollow boss **282** (FIG. **8**) fixed, and preferably integrally molded, in upstanding relation on the front portion of the top **223** of bottle **220**, ahead of the front wall **203** of the housing **201**. The wound drainage tube **22** terminates in a sleeve **283** for removable telescoping over the upstanding boss **282** on the bottle. The sleeve **282**, near its upper end, has an annular groove for receiving an O-ring seal, or the like, at **285** for sealing against leakage of liquid from the wound between the sleeve and boss. A one-way valve **286**, here of the reflux or "duck-bill" type used at **254** in the vacuum connection assembly **229** above discussed, extends pendantly into the bottle **220** with its upper end flange **287** removably fixed in the stepped lower end of the boss **282** by a resilient friction retainer ring **288**. The one-way valve **286** permits in-flow of liquid from the wound through tube **22** and the central through-bore of hollow boss **282**, but precludes reverse flow from the interior of bottle **220**, to preclude contamination of the wound.

To releasably secure the wound drain tube **22** by its sleeve **283** to the upstanding hollow boss **282** on the bottle, a releasable latch **289** is provided. The latch **289** here is of bayonet type and comprises a pin **290** protruding radially from the boss **282** for entering an L-shaped slot **291** at the bottom of sleeve **283** (FIG. **2**). Latching is accomplished by downward movement of the tube **22** and sleeve **283** to enter the pin **290** in the vertical lower leg of the slot **291**, whereafter rotation of the sleeve **283** and tube **22** locates the pin **290** at the blind end of the horizontal leg of the L-shaped slot **291** to axially fix the sleeve **283** and tube **22** to the bottle. The tube **22** and sleeve **283** are releasable from the bottle by reversal of the rotation and axial latching movements above described.

The emptying port **281** comprises a short hollow boss **293**, of wider diameter than bosses **236** and **282** above described and depending from the bottom of the bottle **220**. At the open bottom of the boss **293**, a coaxial, downwardly tapering valve member **294** (FIG. **8**) is fixed by a diametrally extending crossbar **295**, preferably integrally molded therewith and with the boss **293**. The boss **293** is preferably integrally molded with the bottle **220**. The valve member **294** is of lesser diameter

than the interior bore of the boss **293** to provide therebetween a generally annular liquid out-flow space **296** spanned by the crossbar **295**. A cup-shaped cap **297** is upwardly threaded at **298** onto the depending boss **293**, and has a central out-flow opening **299** complementary to the valve member **294**. Thus, with the cap **297** tightly threaded on the boss **293**, the valve member **294** seals the central opening **299** of the cap to prevent out-flow of fluids from the bottom of the bottle. On the other hand, when the cap **297** is partially loosened, the valve member **294** is loose in the central opening **299** in the cap and liquid can flow outward through the central opening **299** of the cap to drain the bottle **220**. If desired, the cap **297** may be entirely removable from the boss **293**, as for cleaning. The boss **293**, above the threads **298** therein, is here provided with an annular groove seating a suitable seal, such as an O-ring seal **300**, for snugly and sealingly engaging a recess in the open upper end of the cap **297**.

To move the patient from the location of the base unit **12** for a time, the reservoir **13** can be removed from the base unit, while still holding a negative pressure and being connected to the wound W on the patient, to travel with the patient. To this end, the reservoir **13** includes an attachment unit **302** (FIGS. **1**, **4** and **6**) securable to the patient or to a mobile patient support such as a wheelchair. In the embodiment shown, the attachment unit **302** comprises a conventional large safety pin **303** having a fixed leg and a movable leg, the fixed leg **304** being removably fixed to the front upper edge portion of the bottle **220**. More particularly, the fixed leg **304** is held in snap-fit relation in a lateral groove **306** in the front face of the boss **282** by a pair of upstanding fingers **307** preferably molded integrally with the top **223** of the bottle **220**. The rear edges of the fingers **307** define a plane substantially tangent to the front of the boss **282** and the fingers **307** are spaced laterally on opposite sides of the boss **282**. The fingers **307** hold the fixed leg of the pin securely in the groove **306** for pinning of the reservoir to the patient's clothing, blanket, or the like. The resilience of the wire of the fixed leg **304** of the pin and, if desired, some resilience in the fingers **307**, permits intended forceful dislodgment from, or installation on, the bottle **220** of the safety pin **303**.

When the reservoir **13** is removed from the base unit **12**, an existing negative pressure within the bottle **220** will be maintained by closure of the one-way valve **254** (FIG. 7) to continue drawing out liquids from the wound W through tube **22** into the bottle **220**. If desired, and particularly to avoid accidental depositing of foreign matter in the interior of the hollow boss **236**, the upper end thereof may be formed with an outward facing annular groove **309** (FIG. 7A) for receiving, here by snap-fit connection, a removable cap **310**. The fit between the internal annular lip **311** of the cap **310** and the groove **309** on boss **236** establishes a secondary vacuum seal in case one-way valve **254** unexpectedly leaks and also positively prevents liquid leakage from the bottle if the latter overturns or is jarred while upside down.

Control circuitry **16**, hereafter described with respect to FIGS. **11** and **12**, is contained within the housing **201**, and for the most part, on a printed circuit board **316** (FIGS. **8** and **9**) spaced in substantially parallel relation between the forward facing wall **210** and back wall **204** in the lower part of the housing **201**. The printed circuit board **316** is fixed as by screws **317** to abutments **318** extending rearward from the forward facing wall **210** of the housing.

In addition, the aforementioned shelf assembly **241** carries additional components of the control circuitry **16**, as hereafter further described. Such components include a potentiometer **P1** (FIGS. **9** and **10**), a battery pack **111** (FIGS. **8–10**), and the aforementioned motor driven vacuum pump **247**. The battery pack **111** here is a commercial 5 volt dual nickel-cadmium unit having plug-type terminals (not shown) in the bottom thereof receivable in socket terminals (not shown) in a rearward slidable shelf **319** through which protrude battery output conductors **112–114**. If desired, the top of the cover **213** may include a door **213*a*** (FIGS. **8** and **9**) rearwardly slidable off the cover **213** for easier access to the potentiometer **P1** and battery pack **111**.

In addition, the front wall **203** (FIG. **1**) of the housing carries visible indicators **65**, **101**, **102** and **103**, hereafter described with respect to FIG. **11**, and appropriate labeling.

Also, a multiple contact input jack **109** (FIG. **2**) is provided in one side **208** of the housing **201** for applying recharging current to the battery pack **111**. Internal electrical connections within the housing are not shown in FIGS. **1–10** but are instead shown in the circuitry drawings at FIGS. **11**, **11A** and **12**, to which attention is now directed.

Operating electrical potential for the control circuitry **16** and the motor driven vacuum pump unit **247** is preferably provided by a commercially available converter **106** (FIG. **11A**), having internal transformer and rectifier circuitry, and arranged to plug into a commercial power line outlet (in the United States for example a 120 volt, 60 cycle AC outlet) and to supply to the plug (not shown) of a conventional jack unit two low voltage (here for example 5.7 volts) lines **106*a*** and **106*b*** referred to a reference, or ground, line **106*c***, for plugging into the socket **109** of the jack connection carried, as above discussed, on the side of the housing, to supply the two sections of the dual battery pack **111**. The battery pack **111** connects through a ground line **112** to the ground side of the control circuitry **16** (as indicated by the conventional ground symbols in FIG. **12**). The two battery pack sections respectively connect through the positive DC supply lines **113** and **114** to corresponding sections **116A** and **116B** of power switch **116** and (when the latter is conductive) to the motor feed conductor **53** at side "A" of the FIG. **11** power supply and to circuitry feed conductor **54**, at side "B" of the DC power supply. Thus, DC operating potential is applied to feed lines **53** and **54** only when the power switch **116** is rendered conductive by completion of insertion of the reservoir **13** into place on the base unit **12** discussed above with respect to FIGS. **3A** and **8**. Conversely, DC operating potential is removed from the lines **53** and **54** by removal of the reservoir from the housing.

The upper left portion of FIG. **11** schematically discloses the vacuum path with the reservoir **13** installed on the base unit **12**, namely with negative pressure applied to the wound drain tube **22** through bottle **220**, hydrophobic filter **243** and vacuum line **246** by the motor driven vacuum pump **247**, here shown as a vacuum pump head **31** driven by a permanent magnet pump motor **32**.

Referring to FIGS. **11** and **12**, a conventional vacuum to electric transducer **35** has a vacuum inlet connected at a branch of the vacuum line **246**. Transducer **35** has

an effective range of, for example, 0 to −5 pounds per square inch (psi).

The vacuum transducer **35** has voltage output lines **36** and **37**, the voltage level on one representing atmospheric pressure and the voltage level on the other representing pressure in the vacuum line **246**, both voltage levels referred to circuit ground.

A ratiometric amplifier/signal conditioner unit **41** comprises a pair of input operational amplifiers **41***a* and **41***b* having noninverting inputs respectively driven by transducer output lines **37** and **36** and inverting inputs strapped together by a resistor **R9** and to which are connected respective feedback resistors **R8** and **R10** from the respective outputs of the operational amplifiers **41***a* and **41***b*. Voltage outputs of the latter operational amplifiers are applied through respective resistors **R11** and **R12** to the inverting and noninverting inputs of a further operational amplifier **41***c*. Operational amplifier **41***c* has a feedback resistor **R13** connected from its output to its inverting input and a bias resistor **R14** connected from its noninverting input to ground. The operational amplifier **41***c* produces, across a grounded resistor **R15**, a voltage signal proportional to the pressure drop from atmospheric pressure to the negative pressure in vacuum line **246** and in bottle **220**.

This vacuum, or negative pressure, signal is applied through a line **42** to an adjustable window detector **43**, and more particularly to the inverting input of an operational amplifier **43***a* thereof. The gain of operational amplifier **43***a* is controlled by connecting its noninverting input to an output feedback resistor **R16** and, through a resistor **R17**, to a voltage divider comprised of a resistor **R18**, potentiometer **P1** and resistor **R19** connected in series across the circuitry DC supply, from line **54** to ground. Adjustment of the potentiometer **P1** changes both the width of the vacuum range, or "window", applied by the base unit **12** to the reservoir **13**, and the amount by which such window (mostly the maximum negative pressure end of such window) is offset below atmospheric pressure. In one example according to the invention, the potentiometer **P1** set at one extreme maintained the vacuum in the reservoir **13** between 1.5 and 4 negative psi and at its opposite extreme maintained the vacuum in the reservoir **13** at between 0.8 and 1.4 negative psi. The latter setting thus provides a relatively light vacuum which is permitted to fluctuate only over a relatively small range and is thus more suited for draining of a wound in relatively delicate tissue. On the other hand, the former setting provides a greater vacuum and permits wider fluctuation in vacuum and is thus more suited for wounds for example in heavy muscle tissue, if higher drainage rates are needed or if thicker and less flowable drainage liquids are encountered.

A motor drive control **48** comprises a transistor **Q2** connected at its base through a resistor **R20** from the output of window detector **43**. The collector-emitter path of transistor **Q2** connects in parallel with a series diode **D2** and capacitor **C7**, the diode **D2** being paralleled by resistor **R21**. A series path leads from battery side "A", namely the DC positive line **53**, through the input terminals of vacuum pump motor **32** (paralleled by an inverse oriented diode **D1**) through the collector and emitter of transistor **Q2** to ground, such that a high or low voltage out of the window detector **43** respectively causes the transistor **Q2** to conduct through (and hence energize) motor **32** or block and thereby turn off the motor **32**. The diode **D2**, resistor **R21**, and capacitor **C7** minimize current to the transistor **Q2** output by in effect shunting the oscillations of the back EMF of motor **32** through diode **D1**.

A motor drive interrupt unit **46** comprises a transistor **Q1** connected between the base of transistor **Q2** and ground and actuable to interrupt conduction of transistor **Q2** through vacuum pump motor **32**, upon application of a positive base potential to line **83** connected to the base of transistor **Q1**. The control circuitry **16** includes several condition monitoring units each responsive to occurrence of undesired, or fault, conditions for placing a high potential on line **83** and thereby disabling the vacuum pump motor **32**.

For example, to monitor battery pack voltage, the control circuit **16** includes a low battery detector unit **51** comprising sections **51***a* and **51***b* respectively responsive to DC voltage lines **53** and **54**. The detector sections **51***a* and **51***b* respectively include operational amplifiers **51***c* and **51***d*. It will be understood that all the operational amplifiers in FIG. **12** are conventionally supplied with DC operating potential by connections not shown to the positive DC circuitry feed line **54** and the ground line **112** of the battery pack. The noninverting input of operational amplifier **51***c* monitors the voltage of DC supply line **53** by connection intermediate the ends of a voltage divider comprising resistors **R54** and **R55** connected between line **53** and ground. Similarly, the noninverting terminal of operational amplifier **51***d* monitors the DC voltage line **54** by connection intermediate the ends of a voltage divider comprising resistors **R45** and **R46** connected between line **54** and ground. The inverting inputs of operational amplifiers **51***c* and **51***d* are supplied a reference potential defined by the constant forward voltage drop across a diode **D15** connected in series with a current limiting resistor **R47** running from DC voltage supply line **54** to ground. If the voltage applied to the noninverting inputs of operational amplifier **51***c* and **51***d* is less than the voltage drop across diode **D15**, due to the voltage on line **53** and **54** being at some higher though still inadequate level, the output of the corresponding operational amplifier **51***c* and **51***d* will be low.

A transistor **Q3** connects in series with a current limiting resistor **R50** from positive line **54** to ground and a bias resistor **R52** connects its base to ground. A further transistor **Q4** connects in series with a resistor **R51** from positive line **54** to ground and a bias resistor **R56** connects its base to ground. The bases of transistor **Q3** and **Q4** connect through respective resistors **R49** and **R53** and a common series resistor **R48** to the output of operational amplifier **51***d*. Thus, inadequate DC circuit voltage on line **54** and hence a low output voltage from operational amplifier **51***d* turns off transistors **Q3** and **Q4**. The resulting high positive collector voltages pass, respectively, through a diode **D17** and line **83** to turn on the motor drive interrupt transistor **Q1** and thus disable the vacuum pump motor **32**, and through a low battery signal line **84** to change to a fault state one flip-flop **81***c* of a fault condition memory **81**.

Back in the low battery detector **51**, a clamping diode **D16** connects the junction point of above-mentioned resistors **R48**, **R49** and **R53** to the output of operational amplifier **51***c*. Thus, inadequate DC motor voltage on line **53**, resulting in low voltage output from operational amplifier **51***c*, acts through the diode **D16** to again turn off both transistors **Q3** and **Q4** and apply high collector potential to their respective fault lines **83** and **84** to again turn off vacuum pump motor **32** and the change flip-

flop **81***c* to a fault state. A voltage high, or fault signal, is thus applied to both lines **83** and **84** if either of the circuit and motor supply voltages on lines **54** and **53** are insufficient. In contrast, if both voltages are sufficient, then the bases of transistors Q3 and Q4 are high and fault lines **83** and **84** are low, indicating no fault and failing to either change the flip-flop **81***c* to a fault state or to disable vacuum pump motor **32**.

Note that regardless of whether the motor supply voltage on line **53** is sufficient or not, an insufficient circuit supply voltage on line **54** results in low battery detector **51** applying the high potential fault signal to lines **83** and **84**. On the other hand, the circuit **51** permits the fault lines **83** and **84** to remain at a low potential, namely a non-fault condition, only when both of the DC supply lines **53** and **54** are at adequate potential.

If the circuitry supply voltage **54** is zero or near zero, in other words so low that an adequate positive fault potential cannot be established on lines **83** and **84**, the output of the window detector **43** will necessarily be too low to turn on motor drive control transistor Q2, such that the vacuum pump will not operate even if the motor supply voltage **53** is adequate. The high fault voltages on lines **83** and **84** will thus be understood to occur when the voltages on supply lines **53** and **54** are above zero but below the desired minimum operating potential, so as to insure disabling of the vacuum pump before dropping battery voltage can introduce error into the operation of the control circuit **16** or appreciably slow the vacuum pump motor **32**.

When a low battery condition changes flip-flop **81***c* to a fault state, the Q output of the latter switches a line **87***c* to a high potential and holds that high potential even if the low battery condition improves somehow and the high potential fault signal on line **83** disappears. The high potential on line **87***c* is applied through a diode D8 and resistor R43 and line **83** to the base of motor interrupt transistor Q1 to continue disabling the vacuum pump motor **32**, until such time as the flip-flop **81***C* may be reset by an attendant as described hereinafter.

The control circuitry **16** includes further monitoring units **62** and **61** for indicating respectively that the pump motor **32** has run continuously for too long a time (characterized as a "high flow" condition) and for indicating that the pump motor **32** has run for an abnormally short period of time (characterized as a "no flow" condition). The high flow fault condition exists when the pump motor **32** runs for an excessive time without achieving the maximum negative pressure in the bottle **220** set by the window detector **43**. Such may be caused by, for example, a break in the drain tube **22** or dislodgment of the remote end of the drain tube **22** from the wound, to in effect vent the bottle **220** to the atmosphere. On the other hand, the no flow fault condition occurs when the vacuum pump very quickly pulls the maximum negative pressure in the bottle **220** set by of window detector **43**, which may, for example, be caused by blockage of flow through the tube **22**, as by plugging or crushing of the tube. Monitoring units **62** and **61** include corresponding timing means, here programmable counters **62***a* and **61***a* having respective reset inputs R connected through corresponding resistors R22 and R26 and lines **71** and **72** respectively to the collector of motor drive control transistor Q2 and to the output of adjustable window detector **43**.

Thus, appearance of a low potential on the reset input R of either counter starts it counting. High flow counter **62***a* thus starts counting upon turning on of vacuum pump motor **32** by transistor Q2 and no flow counter **61***a* starts counting when the output of window detector **43** swings low to turn off transistor Q2 and motor **32**.

For example, if when started, the vacuum pump motor **32** promptly establishes maximum desired negative pressure in the bottle **220**, the window detector **43** shuts off transistor Q2 and motor **32**, and the line **71** goes high to reset the counter **62***a* prior to completion of its count.

In the same way, if with the pump motor **32** off the vacuum in the bottle **220** diminishes at a sufficient rate, due to proper drawing of liquid from the wound through tube **22**, the window detector **43** turns on transistor Q2 and motor **32**, and the line **72** goes high to reset low flow counter **61***a* prior to completion of its count.

A conventional clock source **64** provides clock pulses at 4-second intervals on a clock line **66** and then, by means of corresponding resistor voltage dividers R24, R25 and R28, R29, to the respective clock inputs of high flow counter **62***a* and low flow counter **61***a* to advance such counters at the clock rate when the respective reset inputs R thereof are low as above described. The counters **61***a* and **62***a* are conventionally presettable as to the count level at which they will provide an output (here a high) on their respective output terminals Q13 and Q7 and hence on their respective output lines **76** and **77**.

Such an end of count, or high, signal on either line **76** or **77** is applied to the clock input of a corresponding RS flip-flop **81***b* or **81***a* (of the RS flip-flop unit **81**) which switches the respective Q output high indicating a respective no flow or high flow fault condition has occurred. Each of the flip-flops **81***a*, **81***b* and **81***c* thus acts as a memory device for maintaining its corresponding Q output line **87***a*, **87***b* or **87***c* high regardless of any subsequent change in the potential on its corresponding clock input line **77**, **76** or **84**.

Corresponding high flow, no flow and low battery indicators **101**, **102** and **103** are driven by the Q output lines **87***a*, **87***b* and **87***c* respectively when high, namely when a high flow, no flow or low battery fault condition exists. More particularly, each indicator **101**, **102** and **103** connects in series from the circuit positive DC supply **54** through a common resistor R40 to the collector-emitter circuit of a corresponding transistor **97***a*, **97***b* and **97***c* actuable at its base by a high DC voltage through corresponding current limiting resistors R37, R38 and R39 from the output of a corresponding AND gate **89***a*, **89***b* and **89***c*. The AND gates **89** have respective first inputs connected to the flip-flop Q output lines **87***a*, **87***b* and **87***c*. The second inputs of the AND gates **89** commonly connect to the clock output line **66** from the 4-second clock **64** above described. Preferably the clock **64** has a relatively low duty cycle, or conductive time (for example 30%) to reduce the load on the battery pack **111**. Thus, upon occurrence of a high flow, no flow or low battery condition, the resulting high potential on the corresponding flip-flop Q output line **87***a*, **87***b* or **87***c* acts through the corresponding one of the AND gates **89**, which is enabled by the clock once every 4 seconds, for 30% of its 4-second interval to turn on the corresponding transistor **97***a*, **97***b* or **97***c* and hence the corresponding indicator **101**, **102** or **103**, which thus flashes on at the same rate and for the same duration, to warn hospital personnel of the fault condition. To minimize battery drain, indicators **101**, **102** and **103** are preferably light emitting diodes (LEDs).

To indicate that operating potential is supplied through line **54** to the control circuitry **16**, an on/off indicator **65** (preferably an LED) is driven through a resistor R32 from the clock output line **66** to flash in the 4-second, 30% duty cycle sequence above discussed. The timing of the clock **64** is controlled by conventional timing circuitry here included in the external connection of resistors R33 and R34, diodes D5 and D6 and capacitor C4 as shown in FIG. **12**. If desired, a different clock pulse rate and a different duty cycle may be selected.

In the embodiment shown, a diode D9 connects through aforementioned resistor R43 to the base of motor drive interrupt transistor Q1 and provides, at its anode, a test point, to which application of a positive potential will cause the motor drive interrupt transistor Q1 to disable the vacuum pump motor **32**.

In the embodiment shown, power up reset connections are provided for the counters and flip-flops. More particularly, a series capacitor C1 and resistor R23 connects between circuitry positive supply **54** and ground with the high flow counter **62***a* having its reset input connected intermediate such capacitor and resistor, such that a rise from zero to normal operating potential of the line **54**, by turning on the power switch **116** (FIG. **11**) applies a positive pulse through the capacitor C1 to the reset terminal R which resets the counter to zero.

Series capacitor C2 and resistor R27 provide a similar power up reset for no flow counter **61***a*. Similar series capacitor C5 and resistor R35 and similar series capacitor C6 and resistor R36 provide for power up reset of the flip-flops **89**, thus restoring the Q output lines thereof to their normal low condition.

As seen in the lower portion of FIG. 7A, the float valve assembly **256–260** of FIG. **7** may be replaced by a hydrophobic filter unit **320** in which a modified retainer **256***a* supports a conventional hydrophobic filter element **321** at the bottom thereof by a fixed annular shelf **322** for permitting gas flow but blocking liquid flow through its internal passage **323** between the one-way valve **254** and the interior of the bottle **220**. Unit **320** blocks liquid from leaving the bottle even if the latter is tilted or inverted or agitated, as well as when the bottle is full of liquid. The cap **310** is largely redundant if the unit **320** is used, except perhaps to keep the top of the boss **236** and membrane **251** clean.

The reservoir **13** is preferably of transparent or translucent plastic material. Thus, the interior liquid level can be seen and measured on a volume scale (FIG. **1**) on the side of the bottle. A visual determination of whether the bottle interior is at a negative pressure can be made by observing the shape of a resilient member communicating with the interior of the bottle. Here, as seen through the wall **236**, the profile of the duckbill valve **254** flattens when the bottle interior is at a negative pressure.

Although a particular preferred embodiment of the invention has been disclosed in detail for illustrative purposes, it will be recognized that variations or modifications of the disclosed apparatus, including the rearrangement of parts, lie within the scope of the present invention.

The embodiments of the invention in which an exclusive property of privilege is claimed are defined as follows:

1. A continuous vacuum drainage system for wound drainage, comprising:

a drain reservoir;

a base unit including means for releasably attaching thereto said drain reservoir and having means responsive to releasable attachment thereto of said drain reservoir for evacuating said drain reservoir at a subatmospheric pressure in a predetermined range, said drain reservoir having means continuously operable before, during and after release from said base unit for uninterrupted suction draining of a wound into said drain reservoir.

2. The apparatus of claim **1** in which said reservoir includes a vacuum port with seal means normally closed to maintain a subatmospheric pressure in said reservoir for suction draining of a wound while said reservoir is detached from said base unit, said base unit having a vacuum pump and means releasably connecting said vacuum port with said vacuum pump for actuating said vacuum pump and opening said seal means and thereby for suction draining a wound while said reservoir is mounted on said base unit.

3. A continuous vacuum drainage system for wound drainage on a patient, comprising:

a base unit having a vacuum source;

means defining a portable drain reservoir bottle alternately (1) engageable on said base unit for charging to a subatmospheric pressure and (2) carriable with the patient to locations remote from a base unit while still at subatmospheric pressure, said drain reservoir bottle having a drain port for connection of said bottle to a wound to be drained for suction draining of wounds with said bottle both (1) engaged with said base unit and (2) located remote from said base unit, said bottle having a vacuum port with seal means for sealing the drain reservoir bottle, said seal means being normally closed while said drain reservoir bottle is at subatmospheric pressure and remote from said base unit;

means on said base unit for opening said seal means with said bottle engaged on said base unit and said vacuum port connected to said vacuum source for said charging of said base to subatmospheric pressure.

4. The system of claim **3** in which said vacuum source includes in series a hydrophobic filter means in said base unit capable of passing gasses but not liquids to said vacuum source, said seal means comprising an annular resilient seal member and said opening means comprising a hollow stem associated with said base unit and sealingly insertable through said annular seal member, valve means on said reservoir bottle for permitting withdrawal of gasses from said reservoir bottle by said vacuum source in said base unit through said stem and hydrophobic filter means but sealing against flow of fluids back into said reservoir bottle, and means in said reservoir bottle for preventing against drawing of liquid from said reservoir therethrough into said vacuum source in the event of a rise in liquid level within said reservoir bottle toward said vacuum connection.

5. The apparatus of claim **4** in which said base unit includes a pocket and said reservoir bottle includes a boss extending therefrom for insertion into said pocket, said hydrophobic filter means comprising a hydrophobic filter disposed within said base unit, said preventing means being a float valve, said hollow stem extending from said hydrophobic filter means into said pocket, said annular seal member being an annular latex membrane, said valve means being a one-way valve means, said annular latex membrane, one-way valve means and float valve being sequentially located inboard from the

end of said boss, such that said hollow stem is receivable through said membrane when said boss is fully inserted into said pocket in said base unit.

6. The system of claim 4 including a boss protruding from said reservoir bottle for releasable reception in a pocket in said housing, a cap fitted to the end of said boss and applicable thereto for causing same when said reservoir bottle is not connected with said base unit, and including connector means on said cap and boss for releasably connecting same.

7. The system of claim 3 in which said reservoir includes a bottom emptying port, said bottom emptying port having valve means manually openable for draining said reservoir bottle, said valve means being removable from said bottom emptying port to permit maximum width communication between the interior of said reservoir bottle and the atmosphere.

8. The system of claim 3 in which said base unit includes removable back and top portions remote from the portion of the base unit to which the reservoir bottle is attachable.

9. The system of claim 3 including means secured to said housing for releasably supporting same on a patient support or the like.

10. The system of claim 3 including control means responsive to predetermined conditions in said reservoir bottle for energizing said vacuum source, said base unit comprising a housing, said control means being contained in said housing, said housing including circuit board support means, said housing further including shelf means therein for supporting said vacuum source, a voltage source for said control means, said bottle having top and back sides, said housing in elevation having a substantially inverted L-shape defining a downwardly and forwardly opening recess for receiving the top and back sides of the reservoir bottle, said vacuum source connecting into said recess, a forward facing wall of said recess including means adapted to guide said bottle into properly received relation with said housing, said shelf means being disposed in a horizontal upper leg of said L-shaped housing, said printed circuit board support means being disposed in a depending leg of the L-shaped housing, and including switch means adjacent the front face of said housing and adjacent said printed circuit board mounting means for sensing the insertion of a reservoir bottle into coactive relation with said housing.

11. A continuous vacuum drainage system for wound drainage on a patient, comprising:

a base unit;

a portable drain reservoir carriable by the patient or a mobile patient support to locations remote from said base unit, said drain reservoir comprising a portable bottle having a drain port for connection of said bottle to a wound to be drained and a vacuum port connectible to a vacuum source for reducing pressure in said bottle;

said base unit comprising a housing to which said reservoir is releasably attachable and a vacuum source in said housing; and

interengaging means on said reservoir and housing including (1) mounting means for releasable attachment of said reservoir on said housing and (2) vacuum connection means for connecting said vacuum source to said vacuum port,

said housing including recess means for receiving said reservoir vertically thereinto, said vacuum connection means being located at said recess means of said housing and on the portion of said reservoir receivable in said recess means, such that insertion of said reservoir into said recess means of said housing substantially simultaneously interconnects said guide means and vacuum connection means of said housing and reservoir in a single motion, said wound drain port being located on the top portion of said reservoir in an area thereof outside said housing recess, said reservoir having an emptying port in an area thereof outside said housing recess.

12. The system of claim 11 including a substantially L-shaped deflectable member extending from said reservoir in the direction of said single motion insertion and means defining an undercut opening in said housing for receiving said L-shaped member and including a ledge on said housing, which ledge has a camming surface for deflecting the entering deflectable member and a retaining surface engageable by said L-shaped member for positively holding said reservoir against removal from said housing, said opening including a first portion into which said L-shaped member is insertable and a second portion accessible from outside said housing for disengaging said L-shaped member from said retaining surface and removal of said reservoir from said housing.

13. The system of claim 11 in which said vacuum connection means includes a boss extending from said reservoir in said direction of single motion insertion and an opposing pocket in said housing for receiving said boss, said pocket having taper-ended guide means for guiding said boss coaxially into said pocket to effect said vacuum connection.

14. A continuous vacuum drainage system for wound drainage on a patient, comprising:

a base unit;

a portable drain reservoir carriable by the patient or a mobile patient support to locations remote from said base unit, said drain reservoir comprising a portable bottle having a drain port for connection of said bottle to a wound to be drained and a vacuum port connectible to a vacuum source for reducing pressure in said bottle;

said base unit comprising a housing to which said reservoir is releasably attachable and a said vacuum source in said housing; and

interengaging means on said reservoir and housing including (1) mounting means for releasable attachment of said reservoir on said housing and (2) vacuum connection means for connecting said vacuum source to said vacuum port;

said wound drain port comprising a one-way valve oriented to permit in-flow of drainage liquid from a wound but preventing transfer of fluid out of said reservoir back to said wound,

said wound drain port includes a boss protruding from said reservoir adjacent the upper end thereof, and including a wound drainage hose terminated in means snugly receivable in telescoped relation with said boss, said snugly receivable means and boss having an L-shaped slot in the free end of one thereof coactive with a pin on the other thereof for effecting releasable locking of said hose on said reservoir, said drain port having a recess at the inner end of the boss to receive the flanged end of said one-way valve and means bearing on said flanged end of said one-way valve to hold the latter in said recess at the inner end of said boss, said boss having a central through-bore for passing of

wound drainage liquid from said hose into the interior of said reservoir.

15. The apparatus of claim **14** including lug means protruding from reservoir adjacent said boss, one of said boss and lug means having an indentation for receiving in snap-fit relation fastener means for securing and supporting said reservoir on a patient or patient support independent of said housing.

16. A continuous vacuum drainage system for wound drainage, comprising:

a drain reservoir placeable at negative pressure to receive drainage from the wound;

a motor driven vacuum pump and means for effecting a connection of said pump with said drain reservoir for applying said negative pressure thereto;

control means for controlling said vacuum pump;

a power source for energizing said vacuum pump and control means;

said control means comprising window detector means having both a high negative pressure threshold and low negative pressure threshold and being responsive to a negative pressure input below said low negative pressure threshold for turning on said vacuum pump and responsive to a negative pressure input above said high negative pressure threshold for turning off said vacuum pump, said window detector means being operatively interposed between said power source and said motor driven vacuum pump for so turning the pump on and off such that the pressure in said connection ranges freely and automatically between said high and low negative pressure thresholds, and means responsive to the pressure in the connection between said reservoir and pump for supplying the negative pressure input to the window detector means.

17. A continuous vacuum drainage system for wound drainage, comprising:

a drain reservoir placeable at negative pressure to receive drainage from the wound;

a motor driven vacuum pump releasably connected with said drain reservoir for applying said negative pressure thereto;

control means for controlling said vacuum pump;

a power source for energizing said vacuum pump and control means;

said control means comprising motor drive control means interposed between said power source and said motor driven vacuum pump, and means responsive to the pressure in said reservoir and operatively connected to said motor drive control means for maintaining the pressure in said reservoir within a preselected negative pressure range; and

a base unit containing said pump, control means and power source and to which said drain reservoir is releasably engaged, said control means including power switch means responsive to withdrawal of said reservoir from said base unit for shutting off said pump.

18. A continuous vacuum drainage system for wound drainage, comprising:

a drain reservoir placeable at negative pressure to receive drainage from the wound;

a motor driven vacuum pump connected with said drain reservoir for applying said negative pressure thereto;

control means for controlling said vacuum pump;

a power source for energizing said vacuum pump and control means;

said control means comprising motor drive control means interposed between said power source and said motor driven vacuum pump, and means responsive to the pressure in said reservoir and operatively connected to said motor drive control means for maintaining the pressure in said reservoir within a preselected negative pressure range, said power source being a battery, said control means further including battery level detector means connected to said motor drive control means and responsive to a battery charge level below a desired minimum for causing same to shut off said pump.

19. The system of claim **18** in which said battery comprises a pump voltage source and a circuitry voltage source, said battery level detector means having first and second detectors respectively monitoring said pump voltage source and circuitry voltage source.

20. The system of claim **19** in which said control means includes low battery monitor means including indicator means and responsive to insufficient charge level at least in at least one said voltage source for actuating said indicator means and interrupting energization of said pump.

21. A continuous vacuum drainage system for wound drainage, comprising:

a drain reservoir placeable at negative pressure to receive drainage from the wound;

a motor driven vacuum pump and means for connecting same with said drain reservoir for applying said negative pressure thereto;

control means for controlling said vacuum pump;

a power source for energizing said vacuum pump and control means;

said control means comprising motor drive control means interposed between said power source and said motor driven vacuum pump, and means responsive to the pressure in said reservoir and operatively connected to said motor drive control means for maintaining the pressure in said reservoir within a preselected negative pressure range, said control means further including high flow monitor means including indicator means and counter means responsive to running of said vacuum pump for an excessive time for actuating said indicator means.

22. A continuous vacuum drainage system for wound drainage, comprising:

a drain reservoir placeable at negative pressure to receive drainage from the wound;

a motor driven vacuum pump and means for connecting same with said drain reservoir for applying said negative pressure thereto;

control means for controlling said vacuum pump;

a power source for energizing said vacuum pump and control means;

said control means comprising motor drive control means interposed between said power source and said motor driven vacuum pump, and means responsive to the pressure in said reservoir and operatively connected to said motor drive control means for maintaining the pressure in said reservoir within a preselected negative pressure range, said control means further including low flow monitor means including indicator means and counter means responsive to running of said vacuum pump

for an insufficient time for actuating said indicator means.

23. A continuous vacuum drainage system for wound drainage, comprising:

a drain reservoir placeable at negative pressure to receive drainage from the wound;

a motor driven vacuum pump and means for connecting same with said drain reservoir for applying said negative pressure thereto;

control means for controlling said vacuum pump;

a power source for energizing said vacuum pump and control means;

said control means comprising motor drive control means interposed between said power source and said motor driven vacuum pump, and means responsive to the pressure in said reservoir and operatively connected to said motor drive control means for maintaining the pressure in said reservoir within a preselected negative pressure range, said power source comprising a battery, said control means further including indicator means and monitor means responsive to at least one of a low battery charge level, a too long pump run time, or a too short pump run time, for actuating said indicator means, said monitor means including flip-flop means responsive to actuation of a said indicator means for maintaining said indicator means actuated.

24. The system of claim 23 in which said control means includes a clock pulse source and AND-gate means connected between said flip-flop means and indicator means, said AND-gate means being briefly and repetitively enabled by said clock pulse source, said clock pulse source having less than a 50 percent "on" duty cycle to conserve battery charge.

25. The system of claim 23 including a base unit incorporating said power source and said control means and said vacuum pump, said control means comprising means responsive to connection of said reservoir to said base unit for connecting said power source to said vacuum pump and control means, said control means incorporating further indicator means driven by said clock pulse source for indicating said reservoir is connected to said base unit.

26. A continuous vacuum drainage system for wound drainage on a patient, comprising:

a base unit;

a portable drain reservoir carriable by the patient or a mobile patient support to locations remote from said base unit, said drain reservoir comprising a portable bottle having a drain port for connection of said bottle to a wound to be drained and a vacuum port connectible to a vacuum source for reducing pressure in said bottle;

said base unit comprising a housing to which said reservoir is releasably attached and a vacuum source in said housing; and

interengaging means on said reservoir and housing including (1) mounting means for releasable attachment of said reservoir on said housing and (2) vacuum connection means for connecting said vacuum source to said vacuum port, in which said vacuum connection means on said reservoir includes a one-way valve means aimed to permit withdrawal of gases from said reservoir but preventing fluid flow therethrough back into said reservoir, and further includes a hydrophobic filter in series between said one-way valve means and the interior of said reservoir for passing gases but preventing escape of liquid from said reservoir to said one-way valve.

27. The apparatus of claim 26 including a hollow boss projecting from the top portion of the reservoir, and having an inner end communicating with the interior of the reservoir and an outer end receivable releasably in a recess in said base unit, said hydrophobic filter being located at said inner end of said boss and facing into the interior of said reservoir, said one-way valve means being located in and intermediate the ends of said boss.

28. A continuous vacuum drainage system for wound drainage on a patient, comprising:

a base unit;

a portable drain reservoir carriable by the patient or a mobile patient support to locations remote from said base unit, said drain reservoir comprising a portable bottle having a drain port for connection of said bottle to a wound to be drained and a vacuum port connectible to a vacuum source for reducing pressure in said bottle;

said base unit comprising a housing to which said reservoir is releasably attached and a vacuum source in said housing; and

interengaging means on said reservoir and housing including (1) mounting means for releasable attachment of said reservoir on said housing and (2) vacuum connection means for connecting said vacuum source to said vacuum port;

means on said reservoir defining a resiliently flexible wall having one side thereof facing into said reservoir and the opposite side thereof facing outward of said drain reservoir, said flexible wall being visible from outside said drain reservoir, said wall having a first shape with no pressure drop thereacross and a second and visibly different shape when said drain reservoir is evacuated for indicating that the interior of the reservoir is at a negative pressure.

29. A continuous vacuum drainage system for wound drainage on a patient, comprising:

a base unit;

a portable drain reservoir carriable with the patient to locations remote from said base unit, said drain reservoir having a drain port for connection to a wound to be drained and a vacuum port;

said base unit comprising a housing on which said reservoir is releasably engaged and a vacuum source in said housing thereby engaged with said vacuum port of said reservoir; and

interengaging means on said reservoir and housing actuable in response to said engagement of said reservoir on said housing and vacuum sensing means actuable in response to reservoir, said one-way valve means being located in and intermediate the ends of said boss.

30. The system of claim 29 in which said interengaging means includes power switch means on said housing positioned for actuation by said releasable attachment of said reservoir onto said base unit, and control means in said housing enabled by said actuation of said power switch means and responsive to sensing of predetermined conditions in said reservoir by said vacuum sensing means for energizing said vacuum source.

31. The system of claim 30 including protruding means fixed on said reservoir coactive with an actuator of said switch means on said housing for actuating said switch upon insertion of said reservoir into recess means on said housing, in which said actuator faces into said recess means and said protruding means on said reservoir are on a face of said reservoir received in said recess means.

32. The system of claim 31 in which said recess means comprises first and second recesses on said housing receiving different parts of said reservoir therein.

* * * * *

UNITED STATES PATENT AND TRADEMARK OFFICE

CERTIFICATE OF CORRECTION

PATENT NO. : 4 569 674

DATED : February 11, 1986

INVENTOR(S) : Earl G. PHILLIPS et al

It is certified that error appears in the above-identified patent and that said Letters Patent is hereby corrected as shown below:

Please cancel Claim 29, lines 34 - 49, and replace with the following:

---29. A continuous vacuum drainage system for wound drainage on a patient, comprising:

a base unit;

a portable drain reservoir carriable with the patient to locations remote from said base unit, said drain reservoir having a drain port for connection to a wound to be drained and a vacuum port;

said base unit comprising a housing on which said reservoir is releasably engaged and a vacuum source in said housing thereby engaged with said vacuum port of said reservoir; and

UNITED STATES PATENT AND TRADEMARK OFFICE

CERTIFICATE OF CORRECTION

PATENT NO. : 4 569 674

DATED : February 11, 1986

INVENTOR(S) : Earl G. PHILLIPS et al

It is certified that error appears in the above-identified patent and that said Letters Patent is hereby corrected as shown below:

interengaging means on said reservoir and housing actuable in response to said engagement of said reservoir on said housing and vacuum sensing means actuable in response to an insufficient vacuum at said vacuum port for together causing said vacuum source to reduce the pressure in said reservoir, said interengaging means and vacuum sensing means being cooperably connected such that actuation of either alone is insufficient to cause said vacuum source to reduce the pressure in said reservoir.---.

Signed and Sealed this

Sixteenth Day of December, 1986

Attest:

DONALD J. QUIGG

Attesting Officer

Commissioner of Patents and Trademarks