US006782106B1

(12) **United States Patent**
Kong et al.

(10) **Patent No.: US 6,782,106 B1**
(45) **Date of Patent: Aug. 24, 2004**

(54) **APPARATUS AND METHOD FOR TRANSMITTING SOUND**

(75) Inventors: **Byung-goo Kong**, Seongnam (KR); **Sang-ryong Kim**, Yongin (KR)

(73) Assignee: **Samsung Electronics Co., Ltd.**, Suwon-Si (KR)

(*) Notice: Subject to any disclaimer, the term of this patent is extended or adjusted under 35 U.S.C. 154(b) by 0 days.

(21) Appl. No.: **09/562,890**

(22) Filed: **May 1, 2000**

(30) **Foreign Application Priority Data**

Nov. 12, 1999 (KR) 1999-50222

(51) **Int. Cl.**[7] **H04R 1/10**
(52) **U.S. Cl.** **381/74**; 381/57; 381/110
(58) **Field of Search** 381/74, 57, 110, 381/104, 107, 123

(56) **References Cited**

U.S. PATENT DOCUMENTS

4,455,677 A	*	6/1984	Fox	381/110
4,491,980 A	*	1/1985	Ichikawa	455/344
4,827,458 A	*	5/1989	D'Alayer de Costemore D'Arc	367/136
4,941,187 A	*	7/1990	Slater	381/86
5,551,090 A		9/1996	Thompson	
5,647,011 A	*	7/1997	Garvis	381/123
5,694,467 A		12/1997	Young, III	
5,785,661 A		7/1998	Shennib	
5,845,197 A		12/1998	Hada et al.	
5,907,538 A		5/1999	White	
D410,466 S		6/1999	Mouri	
5,910,997 A		6/1999	Ishige et al.	
5,923,764 A		7/1999	Shennib	

FOREIGN PATENT DOCUMENTS

KR	94-18598	7/1994
KR	96-24888	7/1996

* cited by examiner

Primary Examiner—Minsun Oh Harvey
Assistant Examiner—Brian Pendleton
(74) *Attorney, Agent, or Firm*—Burns, Doane, Swecker & Mathis, L.L.P.

(57) **ABSTRACT**

An apparatus and method for transmitting sound are provided. The apparatus includes an external sound receiver for receiving external sounds and converting them into an external sound signal, a volume controller for outputting sound signals only if each of the volumes of the sound signal of a sound producing device and the sound signal of the external sound receiver exceeds a predetermined reference level, and a mixer for mixing the sound signal of the sound producing device with the sound signals output from the volume controller and outputting the result. The apparatus mixes ambient sounds having volume exceeding a certain volume with the sound of a sound producing device and transmits the mixed sounds to a pair of headphones which are a sound receiver for a user, thereby allowing the user to hear an ambient alarm sound while the user is listening to the sound of the sound producing device and making it possible for the user to audibly detect danger. Consequently, the apparatus provides user safety.

20 Claims, 3 Drawing Sheets

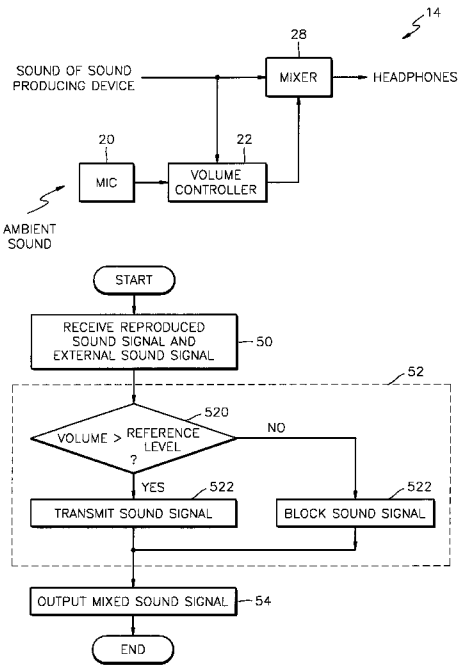

Samsung v. Techiya
IPR2024-01003
Exhibit 1027

FIG. 1

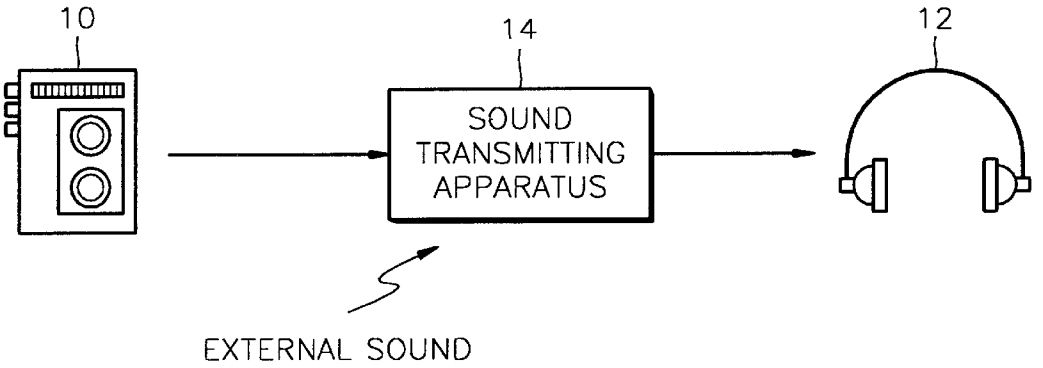
10
14
12
SOUND TRANSMITTING APPARATUS
EXTERNAL SOUND

FIG. 2

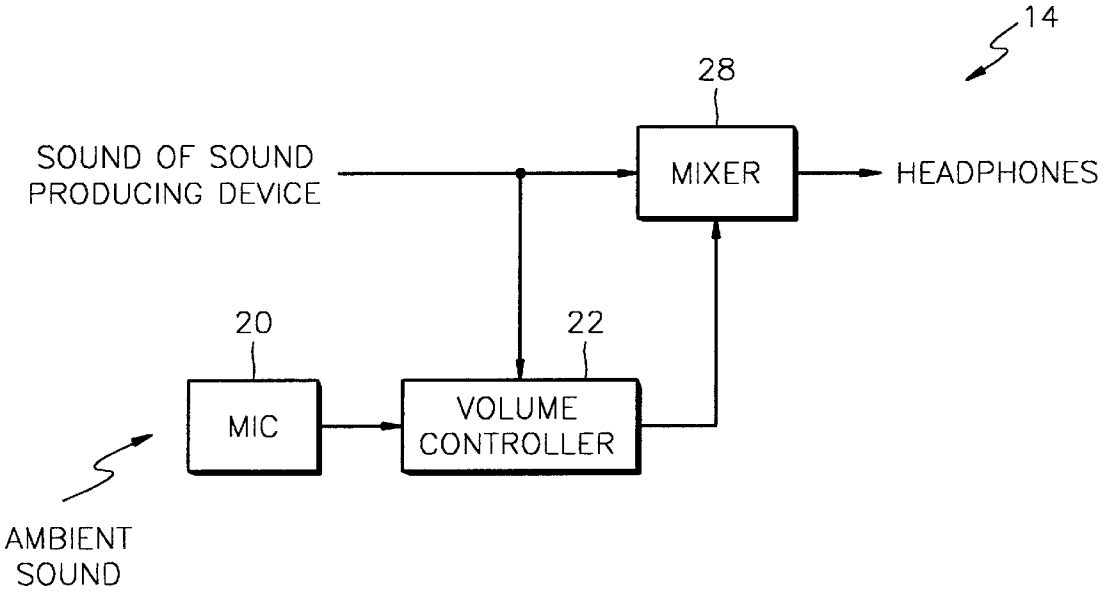
14
28
SOUND OF SOUND PRODUCING DEVICE
MIXER
HEADPHONES
20
22
MIC
VOLUME CONTROLLER
AMBIENT SOUND

FIG. 3

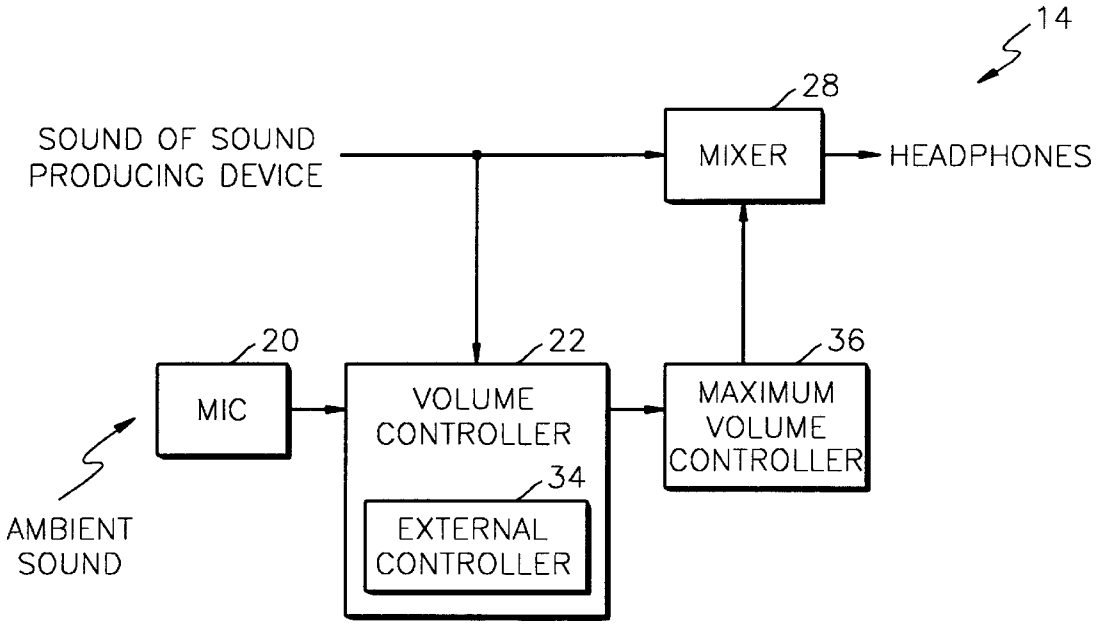
14
28
SOUND OF SOUND PRODUCING DEVICE
MIXER
HEADPHONES
20
22
36
MIC
VOLUME CONTROLLER
MAXIMUM VOLUME CONTROLLER
34
EXTERNAL CONTROLLER
AMBIENT SOUND

FIG. 4

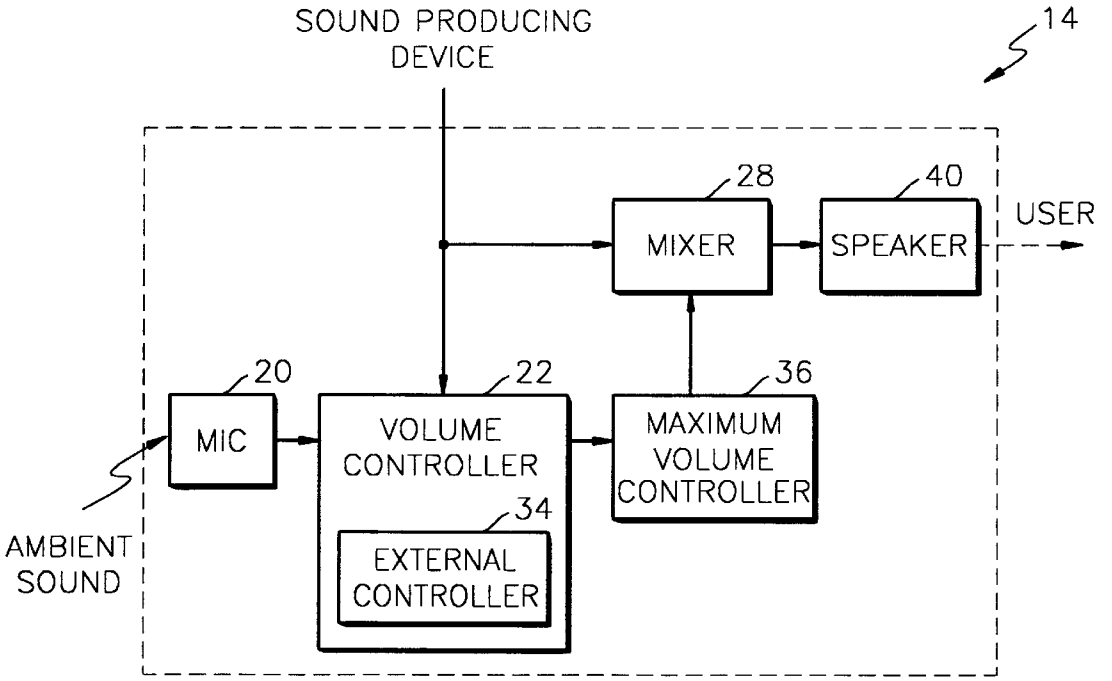
SOUND PRODUCING DEVICE
14
28
40
USER
MIXER
SPEAKER
20
22
36
MIC
VOLUME CONTROLLER
MAXIMUM VOLUME CONTROLLER
34
EXTERNAL CONTROLLER
AMBIENT SOUND

FIG. 5

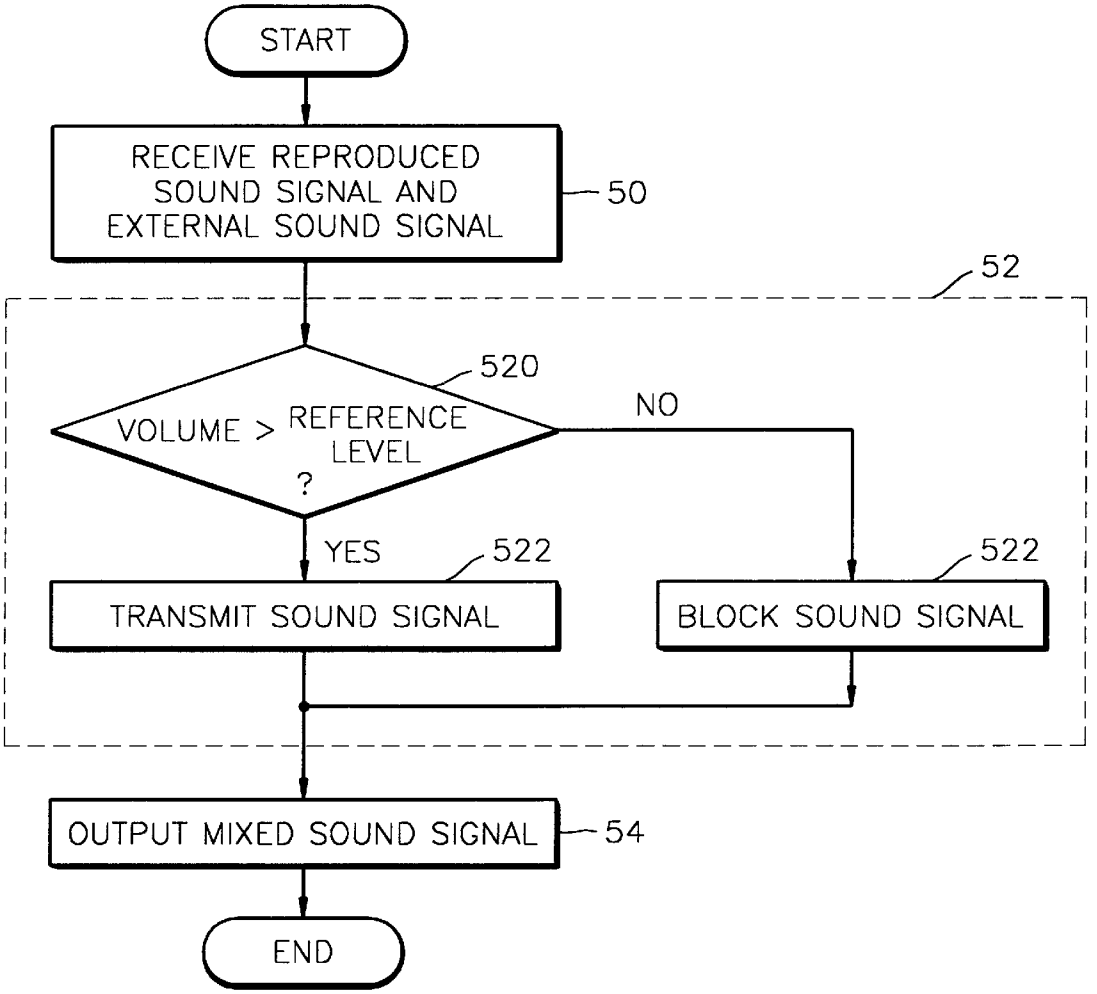
START
RECEIVE REPRODUCED SOUND SIGNAL AND EXTERNAL SOUND SIGNAL
50
52
520
VOLUME > REFERENCE LEVEL ?
NO
YES
522
522
TRANSMIT SOUND SIGNAL
BLOCK SOUND SIGNAL
OUTPUT MIXED SOUND SIGNAL
54
END

APPARATUS AND METHOD FOR TRANSMITTING SOUND

The following is based on Korean Patent Application No. 99-50222 filed Nov. 12, 1999, herein incorporated by reference.

BACKGROUND OF THE INVENTION

1. Field of the Invention

The present invention relates to sound processing, and more particularly, to an apparatus and method for transmitting the sound of a sound producing device to a user together with adjusted external sound.

2. Description of the Related Art

Sound receivers or earphones used when a user listens to sound of sound producing devices have been used for a long time. A typical example of these apparatuses is disclosed in U.S. Des. Pat. No. 410,466. These apparatuses have the same technical basis as apparatuses for protecting hearing by blocking ambient sound and apparatuses for aiding a user to hear ambient sound more clearly.

Various methods for protecting hearing from external noise have been proposed. One of them is disclosed in U.S. Pat. No. 5,551,090. Apparatuses and methods related to a hearing aid for aiding a user to hear ambient sound more clearly are disclosed, for example, in U.S. Pat. Nos. 5,923,764, 5,785,661 and 5,910,997.

Recently, people frequently listen to sound of small and portable sound producing devices using sound receivers or earphones while walking or driving. A method for allowing a user to conveniently carry a portable sound producing device with associated earphones is disclosed in U.S. Pat. No. 5,845,197.

These sound receivers and earphones described above are related only to hearing of sound from sound sources. However, apparatuses for bidirectional sound transmission have been developed. U.S. Pat. No. 5,907,538 discloses an apparatus for simultaneously generating audio output and receiving audio input. Bidirectional earphone function can be achieved through this apparatus.

When using these sound receivers and earphones, it frequently happens that users do not hear ambient sound, for example, an alarm whistle which may be a danger signal, a warning voice or a calling sound. In this case, the user him/her self may be in danger or may be placing those around him/her self in danger. One of the methods for solving this problem is an integrated sound/telephone headset system disclosed in U.S. Pat. No. 5,694,467. According to this system, a user can hear audio sound, telephone ringing sound and ambient sound through a microphone in a bypass mode according to the user's selection. When there is an incoming call, the user can convert the bypass mode into an operational mode to answer the phone. At the end of the conversation, the user can go back to the bypass mode through selection. However, this system is limited in usage and does not guarantee that a user will hear a danger signal.

To solve this problem, a method for allowing a user to hear ambient sound by piercing minute holes at the portion of a sound receiver or an earphone contacting the user's ears has been attempted. However, the problem that a user cannot hear ambient sounds well is not overcome when the volume of the sound from a sound producing device is high. Moreover, the sound of a sound producing device comes out of the sound receiver or earphone through the minute holes and may disturb and annoy other people as noise.

SUMMARY OF THE INVENTION

To solve the above problems, it is an object of the present invention to provide an apparatus and method for transmitting the sound of a sound producing device to a user together with adjusted external sound.

Accordingly, to achieve the above object, the present invention provides an apparatus for transmitting a reproduced sound signal of a sound producing device. The apparatus includes an external sound receiver for receiving external sounds and converting them into an external sound signal, a volume controller for outputting only,the reproduced sound signal and the external sound signal having a volume exceeding a predetermined reference level, and a mixer for mixing the reproduced sound signal with the reproduced and external sound signals output from the volume controller and outputting the result.

To achieve the above object, the present invention also provides a method for transmitting a reproduced sound signal of a sound producing device. The method includes the steps of (a) receiving the reproduced sound signal from a sound producing device and an external sound signal corresponding to ambient sounds, (b) transmitting only the reproduced and external sound signals having a volume exceeding a predetermined reference level, and (c) mixing the reproduced sound signal with the sound signal transmitted in the step (b) and outputting the result.

BRIEF DESCRIPTION OF THE DRAWINGS

The above object and advantages of the present invention will become more apparent by describing in detail preferred embodiments thereof with reference to the attached drawings in which:

FIG. **1** shows the connection between a sound producing device and a sound receiver through a sound transmitting apparatus according to the present invention;

FIG. **2** is a detailed block diagram of a sound transmitting apparatus according to the present invention;

FIG. **3** is a block diagram of a sound transmitting apparatus in which an external controller and a maximum volume controller are added to the sound transmitting apparatus of FIG. **2** according to the present invention;

FIG. **4** is a block diagram of a sound transmitting apparatus in which a speaker is added to the sound transmitting apparatus of FIG. **3** according to the present invention; and

FIG. **5** is a flowchart of a method for transmitting sound according to the present invention.

DETAILED DESCRIPTION OF THE INVENTION

Referring to FIG. **1**, a sound producing device **10** is connected to a sound receiver **12** through a sound transmitting apparatus **14** of the present invention. The sound receiver **12** may be a pair of headphones or a pair of earphones. Typically, the headphones **12** are directly coupled to the headphone terminal of the sound producing device **10**. When the sound transmitting apparatus **14** of the present invention is used, a reproduced sound signal output from the sound producing device **10** is input into the sound transmitting apparatus **14**. The reproduced sound signal may be directly input into the headphone **12**.

The sound transmitting apparatus **14** receives ambient sounds from the outside through a built-in external sound receiver (not shown) in addition to the reproduced sound signal from the sound producing device. The sound trans-

mitting apparatus **14** mixes the external sounds with the reproduced sound signal under predetermined conditions and outputs the mixed sound to the headphones **12**. When the external sounds are very weakly or not completely received, only the reproduced sound signal of the sound producing device **10** is transmitted to the headphones **12**.

Referring to FIG. **2**, an embodiment of the sound transmitting apparatus **14** of the present invention includes an external sound receiver **20** for receiving external sounds and outputting them as an external sound signal, a volume controller **22** for controlling the volume of an input sound when necessary, and a mixer **28** for mixing a reproduced sound signal from the sound producing device with the external sound signal from the volume controller **22** to provide an output.

The external sound receiver **20** may be a microphone (MIC). External sounds other than a sound from the sound producing device are received through the MIC **20**. The external sound signal of the MIC **20** and the reproduced sound signal of a sound producing device are input into the volume controller **22**. The volume controller **22** outputs only the reproduced and external sound signals having a volume exceeding a predetermined reference level among the external sound signal from the MIC **20** and the reproduced sound signal from the sound producing device. In other words, it is intended that external or reproduced sounds of small volume are not transmitted to a user. A purpose of allowing a user to hear external sounds is to let the user hear ambient sounds, especially, a danger sound, while the user is listening to the sound of the sound producing device. It is assumed that a sound of small volume is not related to a danger signal, and thus the present invention does not transmit a sound having a volume level less than a predetermined reference volume level to a user. Even if the volume controller **22** does not transmit a sound from the sound producing device having a volume level less than the predetermined reference volume level, it does not happen that a user cannot listen to the sound from the sound producing device because the sound from the sound producing device is transmitted to the headphones through the mixer **28**.

It is assumed that the predetermined reference volume level may vary according to the place at which the sound producing device is used and the purpose of using the sound producing device. Accordingly, it is preferable that the volume controller **22** includes an external controller **34** of FIG. **3** or **4** for controlling the reference volume level at the outside of a volume controller **22**. When the sound transmitting apparatus **14** of the present invention allows a user to change the predetermined reference volume level according to the environment in which the sound producing device is used by adjusting the external controller **34**, the user can more conveniently use the sound transmitting apparatus **14** of the present invention.

A user may not want to hear ambient sounds when listening to sound from the sound producing device. For example, a user may want to listen to calm music at a quiet place. For this case, the external controller **34** preferably includes a blocking unit (not shown) for preventing external sounds input through the MIC **20** from being transmitted to the mixer **28**.

In other words, a user may use a reference volume level predetermined during manufacturing in the sound transmitting apparatus **14** or change the reference volume level, so that the user can hear only the sound of the sound producing device by increasing the reference volume level very high and blocking transmission of ambient sounds when necessary.

Meanwhile, ambient sounds may not be heard by a user well as the volume of sound output from the sound producing device is increased, even if external sounds having a volume level exceeding a predetermined reference volume level are output to the user. To deal with this case, the volume controller **22** preferably controls the volume of an output sound signal according to the volume of a sound signal from the sound producing device. In other words, the volume of an external sound signal is increased as the volume of a reproduced sound signal from the sound producing device is increased to allow the user to hear the external sounds. A simple example for implementing this function is to control the output volume of a sound signal corresponding to external sounds in proportion to the volume of the sound signal of the sound producing device.

The sound transmitting apparatus **14** preferably includes a maximum volume controller (not shown) for receiving a sound signal from the volume controller **22** having a volume level exceeding a predetermined blocking level and controlling the same to have a volume level corresponding to the predetermined blocking level before the sound signal output from the volume controller **22** is transmitted to the mixer **28**, in order to protect the user's hearing when the volume controller **22** of the sound transmitting apparatus **14** controls the volume of external sounds. The maximum volume controller is preferably realized as an automatic gain control (AGC) device.

FIG. **3** shows a sound transmitting apparatus in which an external controller and a maximum volume controller are added to the sound transmitting apparatus of FIG. **2**. A sound signal whose volume is controlled by the volume controller **22** is input into a maximum volume controller **36**. The maximum volume controller **36** controls the maximum volume of the sound signal before outputting the sound signal to the mixer **28**. The output of the mixer **28** is input into a sound receiver such as a pair of headphones, and thus a user can hear sounds through the sound receiver.

FIG. **4** shows a sound transmitting apparatus in which a speaker is added to the sound transmitting apparatus of FIG. **3**. To directly output the output signal of the mixer **28** to a user, the sound transmitting apparatus of the present invention preferably includes a speaker **40**.

In FIG. **4**, the sound transmitting apparatus of the present invention is shown in a dashed-line box and corresponds to a combination of the sound receiver **12**, i.e., a headphone, and the sound transmitting apparatus **14** of FIG. **1**.

An embodiment of a sound transmitting apparatus according to the present invention may be implemented as shown in FIG. **4**. In another embodiment, a sound transmitting apparatus of the present invention may be used in a sound producing device, especially, a portable sound producing device. For example, a sound transmitting apparatus of the present invention may be used in a portable cassette player.

In still another embodiment, a sound transmitting apparatus of the present invention may be constructed in a remote controller of a portable sound producing device. The remote controller may be connected to the sound producing device and headphones by a cable or wirelessly. When the remote controller is connected to the sound producing device wirelessly, the mixer **28** of the sound transmitting apparatus of FIGS. **2**, **3** or **4** includes an interface for receiving the sound signal of a sound producing device wirelessly. When the remote controller is connected to a headphone wirelessly, the mixer **28** of the sound transmitting apparatus of FIG. **2**, **3** or **4** includes an interface for transmitting a sound signal to a headphone wirelessly.

FIG. **5** is a flowchart of a method for transmitting sound according to the present invention. The method includes a step **50** of receiving a reproduced sound signal from a sound producing device and an external sound signal corresponding to ambient sounds, a step **52** of transmitting only the reproduced sound signal and the external sound signal having a volume exceeding a predetermined reference level, and a step **54** of mixing the reproduced sound signal with the transmitted sound signal to provide an output signal.

The step **52** includes a step **520** of comparing the volume of the reproduced sound signal and the volume of the external sound signal with the predetermined reference level and a step **522** of transmitting only the reproduced and external sound signals having a volume exceeding the predetermined reference level and blocking the remaining sound signals.

The predetermined reference level of the step **52** or **520** is preferably controllable because it is desirable to change a reference of outputting ambient sounds according to an ambient environment or noise in the ambient environment.

It is preferable that the volume of the transmitted sound signal is controlled according to the volume of the reproduced sound signal of the sound producing device when the volume of the transmitted sound signal exceeds the predetermined reference level in the step **522**.

It is preferable that the method also includes the step of controlling the volume of the transmitted sound signal to be a volume corresponding to a predetermined blocking level when the volume of the sound signal generated in the step **522** of the step **52** exceeds the predetermined blocking level.

The predetermined blocking level is preferably controllable because it may be necessary to protect the user's hearing by limiting the volume of overly loud ambient sounds and it may be also necessary to control the predetermined blocking level limiting the volume of the ambient sounds according to an ambient environment or ambient noise.

The method according to the present invention is stated in the description of the operation of a sound transmitting apparatus according to the present invention, and thus the more description thereof will be omitted.

The present invention mixes ambient sounds having volume exceeding a certain volume with the sound of a sound producing device and transmits the mixed sounds to a pair of headphones which are a sound receiver for a user, thereby allowing the user to hear an ambient alarm sound while the user is listening to the sound of the sound producing device and making it possible for the user to audibly detect danger. Consequently, the present invention provides user safety.

While this invention has been particularly shown and described with references to preferred embodiments thereof, it will be understood by those skilled in the art that various changes in form and details may be made therein without departing from the spirit and scope of the invention as defined by the appended claims.

What is claimed is:

1. An apparatus for transmitting a reproduced sound signal of a sound producing device, the apparatus comprising:

an external sound receiver for receiving external sounds and converting them into an external sound signal;

a volume controller for receiving both the reproduced sound signal and the external signal, and for outputting the reproduced sound signal of the sound producing device only when the reproduced sound signal has a volume exceeding a predetermined reference level, and for outputting the external sound signal of the external sound receiver only when the external sound signal has a volume exceeding a predetermined reference level; and

a mixer for mixing the reproduced sound signal and signals output from the volume controller and outputting the result.

2. The apparatus of claim **1**, further comprising a maximum volume controller for receiving the sound signals from the volume controller and controlling each of the reproduced sound signal and the external sound signal so that if their volumes exceed a predetermined blocking level, their volumes will be set to the predetermined blocking level, and outputting the controlled sound signal to the mixer.

3. The apparatus of claim **2**, wherein the maximum volume controller is an automatic gain control device.

4. The apparatus of claim **1**, wherein the volume controller controls the volume of the signal output by the volume controller according to the volume of the reproduced sound signal.

5. The apparatus of claim **1**, wherein the volume controller comprises an external controller for allowing a user to control the predetermined reference level from the outside.

6. The apparatus of claim **5**, wherein the external controller comprises a blocking unit for preventing the external sound signal from being transmitted to the mixer.

7. The apparatus of claim **1**, further comprising a speaker for outputting the output of the mixer to a user.

8. A method for transmitting a reproduced sound signal of a sound producing device, the method comprising the steps of:

(a) receiving the reproduced sound signal from the sound producing device and an external sound signal corresponding to ambient sounds;

(b) transmitting the reproduced sound signal of the sound producing device only when the reproduced sound signal has a volume exceeding a predetermined reference level, and for outputting the external sound signal, only when the external sound signal has a volume exceeding a predetermined reference level; and

(c) mixing the reproduced sound signal and signals transmitted in the step (b) and outputting the result.

9. The method of claim **8**, wherein the step (b) comprises the steps of:

(b1) comparing the volume of reproduced sound signal and the external sound signal with the predetermined reference level respectively; and

(b2) transmitting the reproduced sound signal of the sound producing device and/or the external sound signal, only when the respective signal has a volume exceeding the predetermined reference level and otherwise blocking the same.

10. The method of claim **9**, wherein in the step (b2) the volume of the transmitted sound signal is controlled according to the volume of the reproduced sound signal.

11. The method of claim **8**, wherein the predetermined reference level in the step (b) can be controlled.

12. The method of claim **8**, further comprising the step of controlling the volume of the transmitted sound signals to be a volume corresponding to a predetermined blocking level when the volume of the sound signal transmitted in the step (b) exceeds the predetermined blocking level.

13. The method of claim **12**, wherein the predetermined blocking level can be controlled.

14. A system comprising:

a sound producing device produce a reproduced sound signal; and

an apparatus comprising:

an external sound receiver for receiving external sounds and converting them into an external sound signal;

a volume controller for receiving both the reproduced sound signal and the external sound signal, and for outputting the reproduced sound signal of the sound producing device only when the reproduced sound signal has a volume exceeding a predetermined reference level, and for outputting the external sound signal of the external sound receiver only when the external sound signal has a volume exceeding a predetermined reference level; and

a mixer for mixing the reproduced sound signal and signals output from the volume controller and outputting the result.

15. The system of claim **14**, further comprising a maximum volume controller for receiving the sound signals from the volume controller and controlling each of the reproduced sound signal and the external sound signal so that if their volumes exceed a predetermined blocking level, their volumes will be set to the predetermined blocking level, and outputting the controlled sound signal to the mixer.

16. The system of claim **15**, wherein the maximum volume controller is an automatic gain control device.

17. The system of claim **14**, wherein the volume controller controls the volume of the signal output by the volume controller according to the volume of the reproduced sound signal.

18. The system of claim **14**, wherein the volume controller comprises an external controller for allowing a user to control the predetermined reference level from the outside.

19. The system of claim **18**, wherein the external controller comprises a blocking unit for preventing the external sound signal from being transmitted to the mixer.

20. The system of claim **14**, further comprising a speaker for outputting the output of the mixer to a user.

* * * * *