US 20070223717A1

(19) United States

(12) Patent Application Publication

(10) Pub. No.: US 2007/0223717 A1

(43) Pub. Date: Sep. 27, 2007

Boersma

(54) HEADSET WITH AMBIENT SOUND

(76) Inventor: **Johan Boersma**, Emmen (NL)

Correspondence Address:
WARREN A. SKLAR (SOER)
RENNER, OTTO, BOISSELLE & SKLAR, LLP
1621 EUCLID AVENUE
19TH FLOOR
CLEVELAND, OH 44115 (US)

(21) Appl. No.: **11/370,349**

(22) Filed: **Mar. 8, 2006**

Publication Classification

(51) **Int. Cl.**
H04R 1/10 (2006.01)
A61F 11/06 (2006.01)

(52) **U.S. Cl.** **381/74**; 381/71.6; 381/72

(57) **ABSTRACT**

A headset that includes an input that receives an audio signal from an electronic equipment, and at least one earpiece having an electro-acoustic speaker for converting electrical signals to audible sound. The headset further includes at least one microphone that receives ambient sound and converts the ambient sound to an ambient sound signal. In addition, the headset includes a processing circuit formed as an integral unit with the input and the at least one earpiece. The processing circuit includes circuitry that combines the audio signal from the electronic equipment with the ambient sound signal from the at least one microphone and provides the combined signals to the at least one earpiece such that the electro-acoustic speaker reproduces the ambient sound in combination with audio from the audio signal.

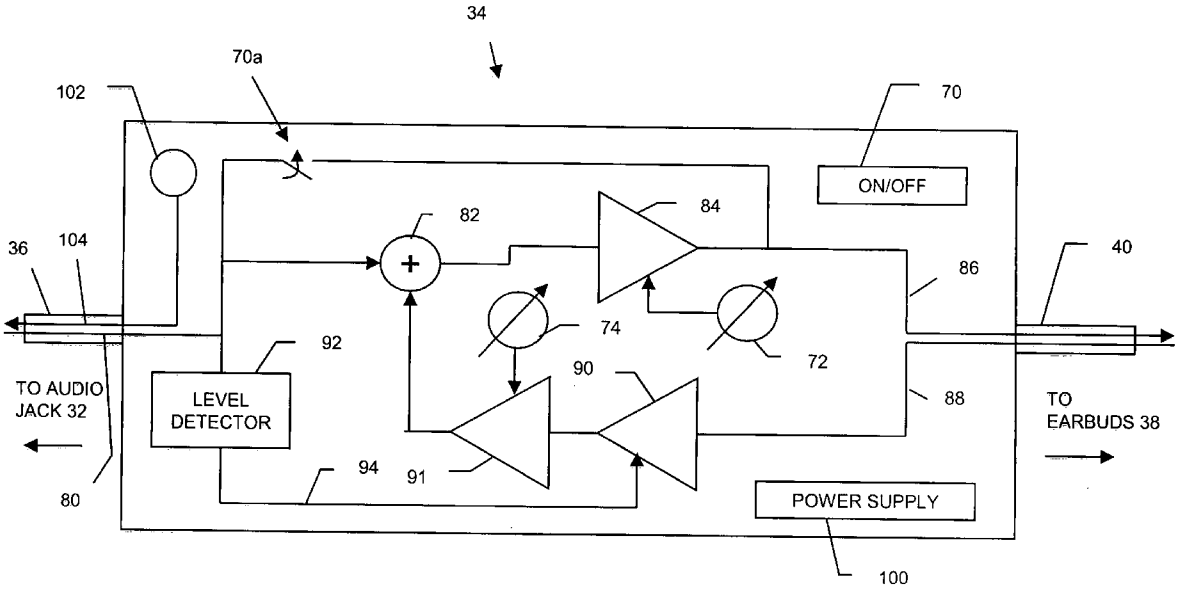

Samsung v. Techiya
IPR2024-01003
Exhibit 1051

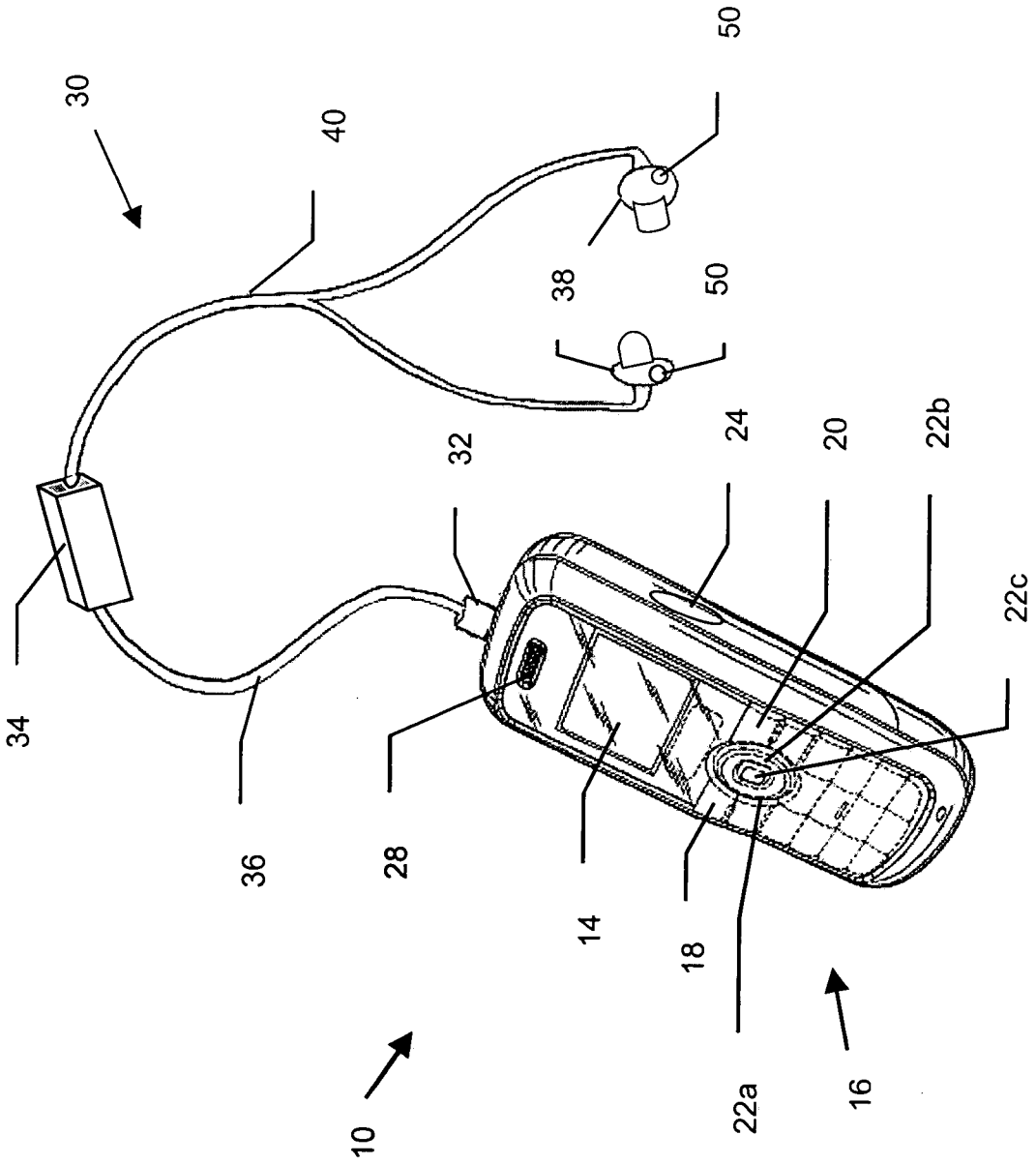

FIG. 1

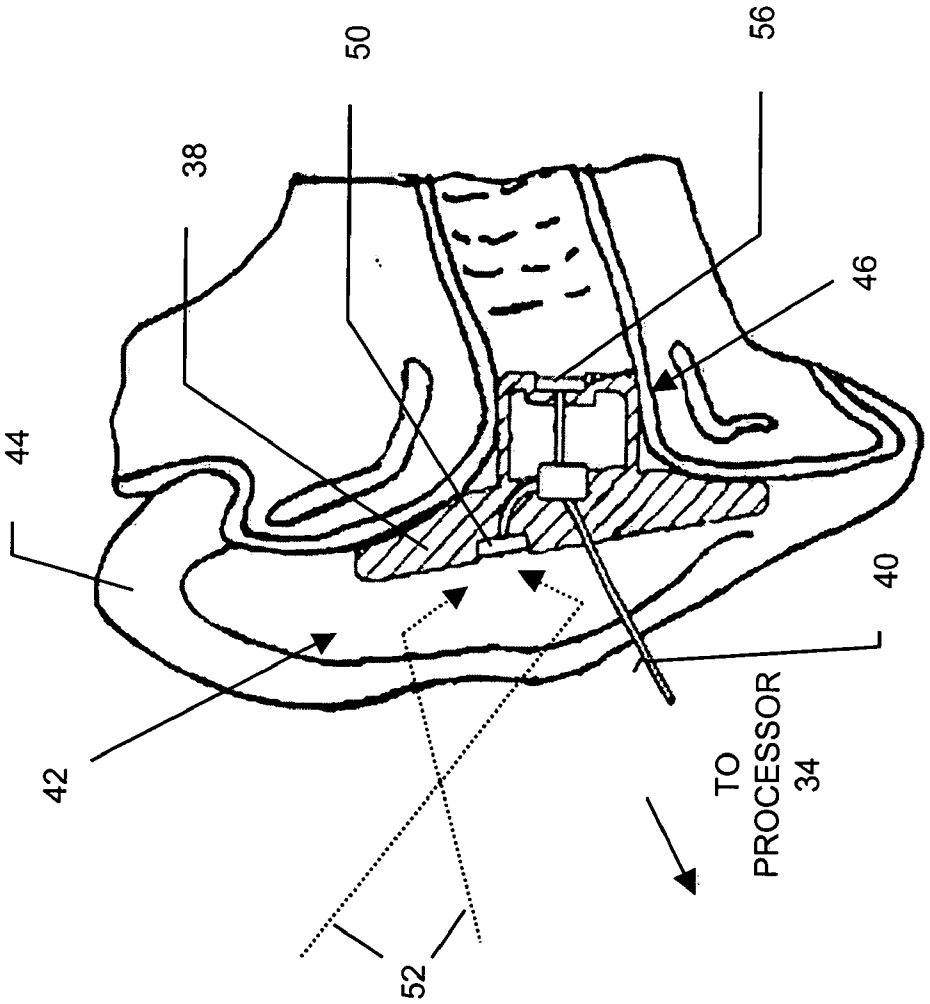

FIG. 2

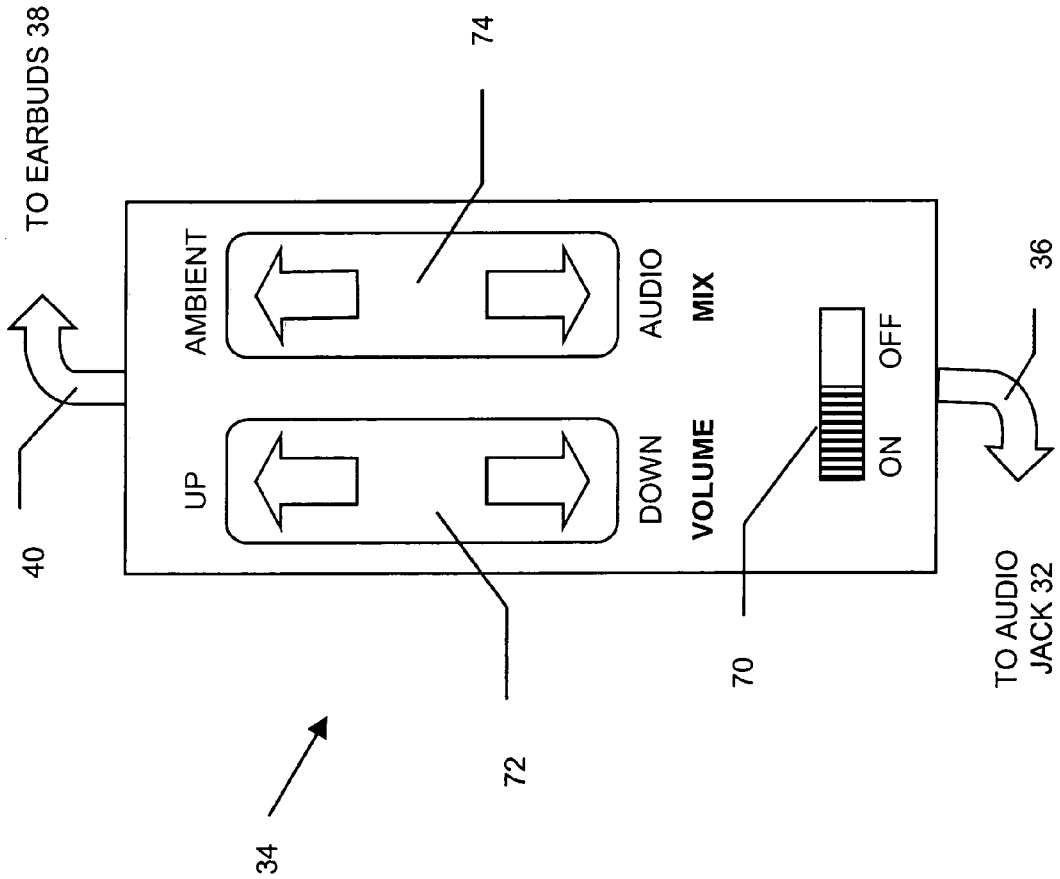
TO EARBUDS 38
40
34
UP
AMBIENT
DOWN
AUDIO
VOLUME
MIX
ON
OFF
72
74
70
36
TO AUDIO
JACK 32

FIG. 3

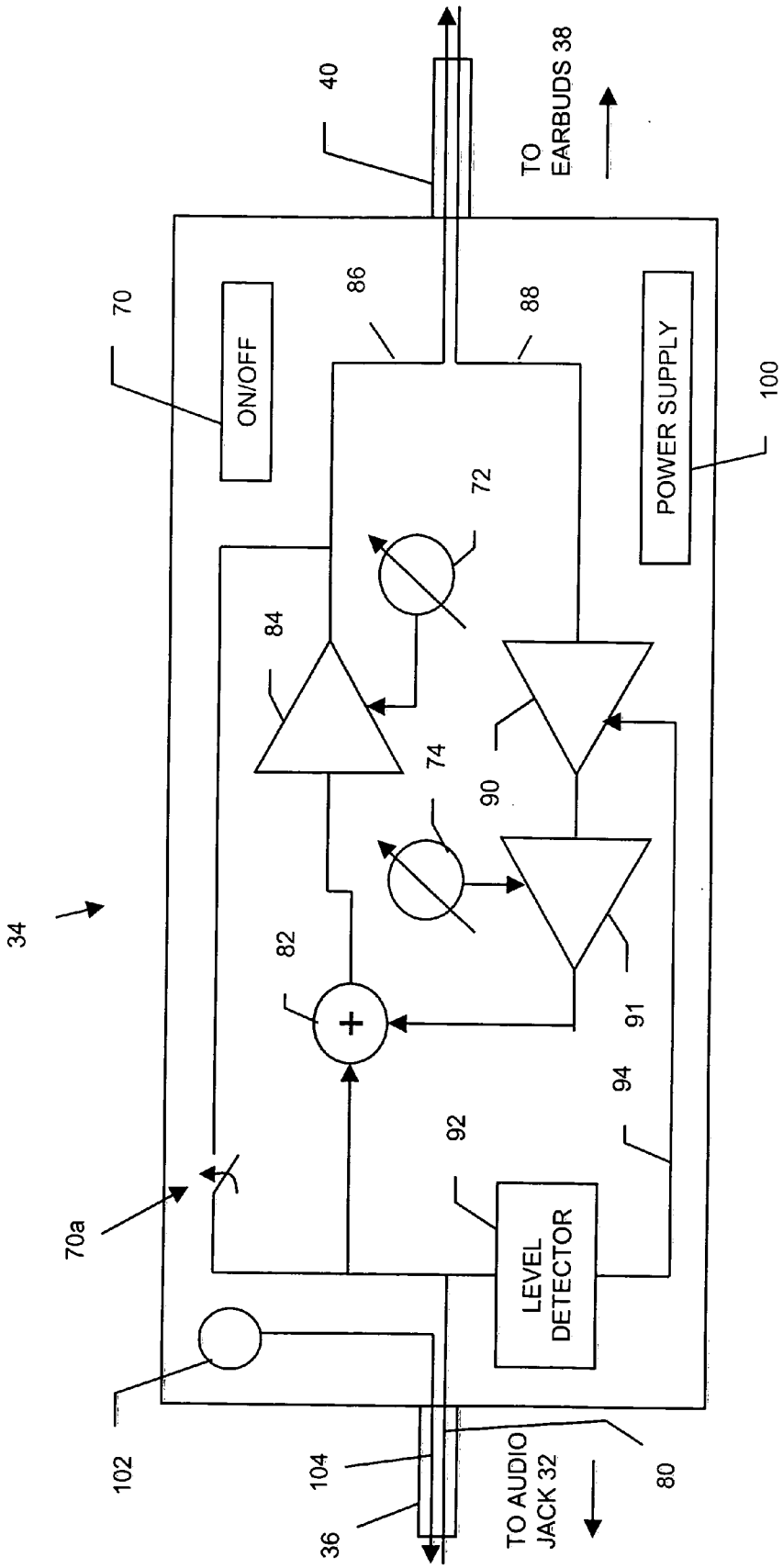
34
70
ON/OFF
40
TO EARBUDS 38
86
88
POWER SUPPLY
100
72
84
74
90
82
91
94
92
LEVEL DETECTOR
70a
102
104
36
TO AUDIO JACK 32
80

FIG. 4

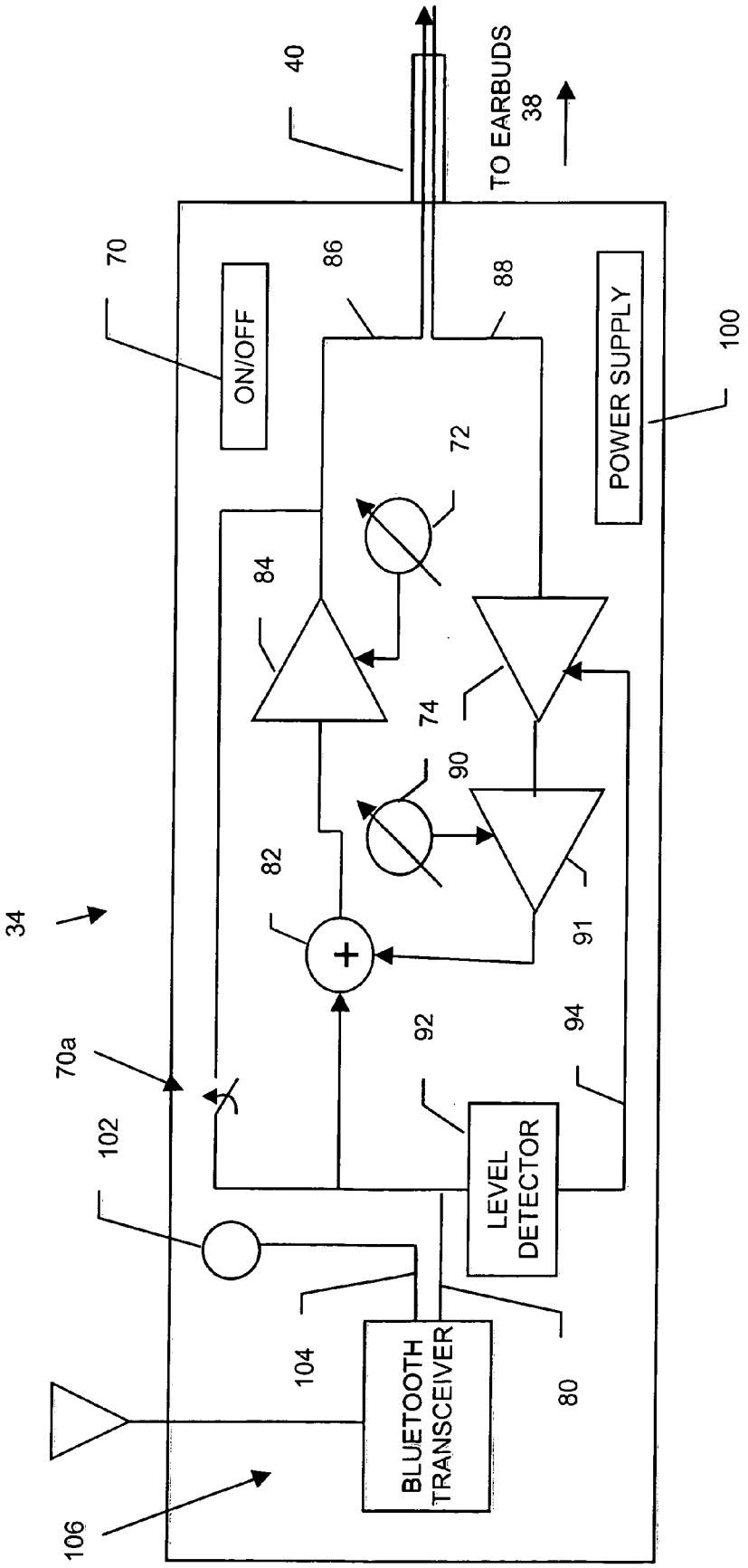
40
TO EARBUDS
38
70
ON/OFF
86
88
POWER SUPPLY
100
72
84
74
90
82
91
34
92
94
70a
102
LEVEL
DETECTOR
104
BLUETOOTH
TRANSCEIVER
80
106

FIG. 5

HEADSET WITH AMBIENT SOUND

TECHNICAL FIELD OF THE INVENTION

[0001] The present invention relates generally to electronic equipment, and more particularly to a headset for electronic equipment.

DESCRIPTION OF THE RELATED ART

[0002] Electronic equipment such as portable electronic devices have been popular for decades yet continue to increase in popularity. Many modem portable electronic devices are intended or suitable for recording or playback of acoustic and/or video signals. For example, portable CD or DVD players, MPEG players, MP-3 players, etc., provide a vast variety of forms of personal entertainment. Whether audio and/or video entertainment, there are numerous portable electronic devices to satisfy any user's tastes.

[0003] Similarly, portable electronic devices in the form of mobile phones, pagers, communicators, e.g., electronic organizers, personal digital assistants (PDAs), smartphones or the like are also becoming increasingly popular. Such devices allow a user to communicate with others, store and manipulate data, create text, etc., many times within the same device.

[0004] Depending on the particular application(s), oftentimes a headset is used in combination with the portable electronic device. The headset typically includes one or more loudspeakers formed in respective earpiece housings that are either placed within the ear (in-ear headphones) or over the ear (over-the-ear headphones). A headset allows the user of a mobile phone to engage in hands free discussion, for example. In the case of media players, a headset allows a user to enjoy a private listening experience without bothering others.

[0005] Conventional headsets, however, do possess disadvantages. The earpieces alone or in combination with the music or other audio reproduced by the headset can completely block out all other sounds from the environment. Typically, the higher the volume of the audio being reproduced, the less likely that outside environmental sounds will be recognized by the user. While there are times the user may desire isolation of this type, there also are times when the user's inability to hear these ambient sounds can be undesirable or even dangerous. For example, a user wearing a headset while in traffic may be unable to hear police or emergency equipment sirens, thereby creating a potentially dangerous situation. In a social situation, a user wearing a headset still may desire to hear sound from his/her surroundings.

[0006] Headsets in the past have attempted to maintain ambient sound in addition to the audio reproduced by the headsets. Such headsets have included headsets with one or more microphones designed to pick up ambient sounds. The ambient sounds are then combined with the audio signal and reproduced by the headsets.

[0007] Nevertheless, the aforementioned attempts have fallen short insofar as providing a user with comfortable and convenient reproduction of ambient sound together with the desired audio. For example, conventional headsets have been limited with respect to their ability to be used with a variety of types of electronic equipment. Moreover, conventional headsets have not provided the user with sufficient control as to the combining of the ambient sound with the reproduced audio. Still further, conventional headsets have restricted the user's ability to receive and appreciate the spatial characteristics of the ambient sound.

SUMMARY

[0008] In view of the aforementioned shortcomings associated with conventional headsets, there is a strong need in the art for a headset suitable for use with a variety of types of electronic equipment. Additionally, there is a strong need in the art for a headset that provides a user with the ability to control the manner in which the ambient sound is combined with the reproduced audio. Still further, there is a strong need in the art for a headset that preserves the spatial characteristics of the ambient sound.

[0009] According to an aspect of the invention, a headset for reproducing audio is provided. The headset includes an input that receives an audio signal from an electronic equipment, and at least one earpiece having an electro-acoustic speaker for converting electrical signals to audible sound. The headset further includes at least one microphone that receives ambient sound and converts the ambient sound to an ambient sound signal. In addition, the headset includes a processing circuit formed as an integral unit with the input and the at least one earpiece. The processing circuit includes circuitry that combines the audio signal from the electronic equipment with the ambient sound signal from the at least one microphone and provides the combined signals to the at least one earpiece such that the electro-acoustic speaker reproduces the ambient sound in combination with audio from the audio signal.

[0010] According to a particular aspect, the input includes an electrical connector configured to connect directly to the electronic equipment.

[0011] In accordance with another aspect, the electrical connector includes an audio plug type connector.

[0012] According to still another aspect, the processing circuitry is coupled to the electrical connector via a first audio cable and to the at least one earpiece via a second audio cable, all of which are part of the integral unit.

[0013] In still another aspect, the electronic equipment is a mobile telephone.

[0014] Regarding another aspect, the input comprises a low-power wireless interface that communicates with an interface included in the electronic equipment.

[0015] According to still another aspect, the low-power wireless interface is a Bluetooth interface.

[0016] With yet another aspect, the electronic equipment is a mobile telephone.

[0017] Regarding a further aspect, the headset includes a pair of earpieces each including an electro-acoustic speaker for reproducing audio from the audio signal and the ambient sound.

[0018] In accordance with another aspect, the headset includes a pair of microphones each included in a respective one of the pair of earpieces.

[0019] According to another aspect, the at least one earpiece is an earbud-style earpiece.

[0020] In accordance with yet another aspect, the earbud-style earpiece includes the at least one microphone.

[0021] In yet another aspect, the earbud-style earpiece is configured to be inserted into an ear of a user with the microphone positioned within a cavity formed by the auricle of the ear.

[0022] As for still another aspect, a headset for reproducing audio is again provided. The headset includes an input that receives an audio signal from an electronic equipment, at least one earpiece having an electro-acoustic speaker for converting electrical signals to audible sound, and at least one microphone that receives ambient sound and converts the ambient sound to an ambient sound signal. The headset further includes a processing circuit, the processing circuit including circuitry that combines the audio signal from the electronic equipment with the ambient sound signal from the at least one microphone and provides the combined signals to the at least one earpiece such that the electro-acoustic speaker reproduces the ambient sound in combination with audio from the audio signal. The at least one earpiece includes the at least one microphone, and the earpiece is configured to be inserted into an ear of a user with the microphone positioned within a cavity formed by the auricle of the ear.

[0023] According to another aspect, the headset includes a pair of earpieces each including a respective electro-acoustic speaker and corresponding microphone, the respective electro-acoustic speaker reproducing the ambient sound received by the corresponding microphone.

[0024] In accordance with still another aspect, the processing circuit includes mixture circuitry adjustable by a user to adjust a ratio by which the processing circuit combines the audio signal and the ambient sound signal.

[0025] With still another aspect, the processing circuit includes volume adjust circuitry adjustable by the user to adjust the volume of the combined signals independently of the ratio.

[0026] As for still another aspect, the processing circuit includes gain control circuitry that compensates for changes in amplitude of the input signal such that the ratio remains constant.

[0027] Regarding another aspect, the processing circuit includes bypass circuitry allowing the input signal to pass to the at least one earpiece substantially without modification.

[0028] According to another aspect, the processing circuit is formed as an integral unit with the input and the at least one earpiece.

[0029] In accordance with another aspect of the invention, a headset for reproducing audio is provided that includes an input that receives an audio signal from an electronic equipment and at least one earpiece having an electro-acoustic speaker for converting electrical signals to audible sound. The headset also includes at least one microphone that receives ambient sound and converts the ambient sound to an ambient sound signal and a processing circuit. The processing circuit includes circuitry that combines the audio signal from the electronic equipment with the ambient sound signal from the at least one microphone and provides the combined signals to the at least one earpiece such that the electro-acoustic speaker reproduces the ambient sound in combination with audio from the audio signal. The processing circuit also includes mixture circuitry adjustable by a user to adjust a ratio by which the processing circuit combines the audio signal and the ambient sound signal.

[0030] According to another aspect, the processing circuit includes volume adjust circuitry adjustable by the user to adjust the volume of the combined signals independently of the ratio.

[0031] As for another aspect, the processing circuit includes gain control circuitry that compensates for changes in amplitude of the input signal such that the ratio remains constant.

[0032] In accordance with still another aspect, the processing circuit includes bypass circuitry allowing the input signal to pass to the at least one earpiece substantially without modification.

[0033] Regarding yet another aspect, the at least one earpiece includes the at least one microphone, and the earpiece is configured to be inserted into an ear of a user with the microphone positioned within a cavity formed by the auricle of the ear.

[0034] According to another aspect, the processing circuit is formed as an integral unit with the input and the at least one earpiece.

[0035] To the accomplishment of the foregoing and related ends, the invention, then, comprises the features hereinafter fully described and particularly pointed out in the claims. The following description and the annexed drawings set forth in detail certain illustrative embodiments of the invention. These embodiments are indicative, however, of but a few of the various ways in which the principles of the invention may be employed. Other objects, advantages and novel features of the invention will become apparent from the following detailed description of the invention when considered in conjunction with the drawings.

[0036] It should be emphasized that the term "comprises/comprising" when used in this specification is taken to specify the presence of stated features, integers, steps or components but does not preclude the presence or addition of one or more other features, integers, steps, components or groups thereof.

BRIEF DESCRIPTION OF THE DRAWINGS

[0037] FIG. **1** is an environmental view of a mobile phone and headset in accordance with an embodiment of the present invention;

[0038] FIG. **2** is a cross-sectional view of an earbud including a microphone positioned so as to be located within the cavity of the auricle in accordance with an embodiment of the present invention;

[0039] FIG. **3** is front view of a processor of a headset in accordance with an embodiment of the present invention;

[0040] FIG. **4** is a simplified circuit diagram of the processor of FIG. **3** in accordance with an embodiment of the present invention; and

[0041] FIG. **5** is a simplified circuit diagram of a processor in accordance with another embodiment of the present invention.

DETAILED DESCRIPTION OF EMBODIMENTS

[0042] The present invention will now be described with reference to the drawings, wherein like reference numerals are provided for like elements throughout.

[0043] The term "electronic equipment" as referred to herein includes personal portable electronics, including, but not limited to, media players of various formats such as digital music players (e.g., CD, MP3, AC-3, .wma, etc.), video players (e.g., DVD, MPEG, .wmv, etc.), picture players (e.g., JPEG, etc.). Electronic equipment includes traditional media players such as CD and DVD players, as well as the increasingly popular "flash memory" and "hard drive" type media players, referring to the type of memory used to store various media files. Electronic equipment includes dedicated media players as well as multi-functional devices that include media players. Such multi-functional devices include portable radio communication equipment. The term "portable radio communication equipment", also referred to herein as a "mobile radio terminal", includes all equipment such as mobile phones, pagers, communicators, e.g., electronic organizers, personal digital assistants (PDAs), smartphones or the like. In the present application, the invention is described primarily in the context of a mobile phone. However, it will be appreciated that the invention is not intended to be limited to a mobile phone and can be any type of electronic equipment. Moreover, although the invention is described primarily in the context of listening to music via an electronic equipment such as a mobile telephone, it will be appreciated that the invention more generally has application with any type of electronic equipment for which sound is reproduced.

[0044] Referring initially to FIG. **1**, an electronic equipment **10** is shown in accordance with the present invention. In the exemplary embodiment described herein, the electronic equipment is a mobile phone **10**. The mobile phone **10** is shown as having a "brick" or "block" design type housing, but it will be appreciated that other type housings such as clamshell or slide-type housings may be utilized without departing from the scope of the invention.

[0045] The mobile phone **10** includes a display **14** and keypad **16**. As is conventional, the display **14** displays information to a user such as operating state, time, phone numbers, contact information, various navigational menus, etc., which enable the user to utilize the various features of the mobile phone **10**. Similarly, the keypad **16** may be conventional in that it provides for a variety of user input operations. For example, the keypad **16** typically includes alphanumeric keys for allowing entry of alphanumeric information such as telephone numbers, phone lists, contact information, notes, etc. In addition, the keypad **16** typically includes special function keys such as a "call send" key **18** for initiating or answering a call, and a "call end" key **20** for ending, or "hanging up" a call. Special function keys may also include menu navigation keys **22***a*, **22***b* and **22***c*, for example, for navigating through a menu displayed on the display **14** to select different phone functions, profiles, settings, etc., as is conventional. Other keys included in the keypad **16** may include a volume key **24**, on/off power key **26**, as well as various other keys such as a web browser launch key, camera key, etc.

[0046] In the particular embodiment of FIG. **1**, the mobile phone **10** includes the display **14** and separate keypad **16**. In an alternative embodiment, the display **14** may comprise a touchscreen which itself includes one or more keys. In yet another embodiment, the display **14** may comprise a touchscreen that includes all or substantially all of the keys used to operate the phone **10** so as to include a very limited keypad **16** or no keypad **16** at all. As will be appreciated, the particular form and function of the keys included in the keypad **16** or touchscreen/display **14** are not germane to the invention in its broadest sense.

[0047] The mobile phone **10** is a multi-functional device that is capable of carrying out various functions in addition to traditional mobile phone functions. For example, the mobile phone **10** in accordance with the present invention also functions as a media player. More specifically, the mobile phone **10** is capable of playing different types of media objects such as audio files (e.g., MP3, .wma, AC-3), video files (e.g., MPEG, .wmv, etc.), still images (e.g., .pdf, JPEG, .bmp, etc.). The media objects are typically stored in non-volatile memory within the mobile phone **10**. The mobile phone **10** reproduces audio files through a speaker **28** or an accessory such as a stereo headset **30** in accordance with the present invention. The stereo headset **30** may be plugged into or otherwise connected to an audio output of the mobile phone **10** via an appropriate connector.

[0048] For reasons that will be explained more fully below, the headset **30** overcomes the aforementioned shortcomings associated with conventional headsets used with electronic equipment having an audio output. For example, the headset **30** is suitable for use with a variety of types of electronic equipment. The headset **30** does not necessarily rely on processing circuitry and/or controls within the electronic equipment **10** to provide a user with the ability to listen to reproduced audio yet still be able to hear ambient sound. Moreover, the headset **30** provides a user with the ability to control the manner in which the ambient sound is combined with the reproduced audio. The user has the ability to control the respective levels of the reproduced audio and ambient sound, thereby allowing the user to adjust the listening experience to his or her preference. Still further, the headset **30** preserves the spatial characteristics of the ambient sound. As a result, the user continues to be able to derive aspects such as the direction from which the ambient sound originates. These features increase the safety and improve the listening experience of the user compared to conventional headsets.

[0049] The headset **30** in the exemplary embodiment includes an input **32** for receiving an audio signal from the mobile phone **10**. The input **32** may include a conventional audio jack/plug or any other type of suitable electrical connector. Preferably the audio signal is a stereo signal including audio for left and right channels, although one will appreciate that the audio signal may be a signal other than stereo (e.g., mono, multi-channel, etc.).

[0050] The headset **30** further includes a processor **34** that receives the audio signal from the input **32** via an audio cable **36**. In addition, the headset **30** includes a pair of earpieces **38** coupled to the processor **34** via an audio cable **40**. Each of the earpieces **38** is conventional in that the earpieces **38** each include an electro-acoustic loudspeaker (not shown) within the earpiece housing for converting

electrical signals into audio sound. The processor **34** provides the left and right channel stereo signals from the output of the mobile phone **10** to the respective earpieces **38**.

[**0051**] In the exemplary embodiment, the earpieces **38** are each "in-the-ear" type earpieces such as an earbud **38** as is shown in FIG. **2**. As referred to herein, an "in-the-ear" type earpiece **38** is a type that a user wears generally within the cavity **42** formed by the auricle **44** of the ear. Earbuds **38** fit snuggly within the cavity **42** and/or the opening **46** to the ear canal. In contrast, an "outside-the-ear" type earpiece is an earpiece that a user wears generally outside or on top of the cavity **42** formed by the auricle **44**.

[**0052**] Continuing to refer to FIGS. **1** and **2**, each earpiece **38** includes a microphone **50** for picking up ambient sound. The microphone **50** is positioned within the earpiece housing such that when the earpiece **38** is worn by the user, the microphone **50** is located within and exposed to the cavity **42** formed by the auricle **44**. Thus, as represented by arrows **52** in FIG. **2**, ambient sound waves collected by the auricle **44** are focused generally towards the microphone **50**. As a result, the microphone **50** picks up ambient sound while preserving the spatial characteristics of the sound. That is to say, the same way a human is able to detect the direction from which sounds originate based on the spacing and direction of the ears, the microphones **50** pick up the same ambient sound. In contrast, microphones located in over-the-ear type earpieces lose such spatial characteristics. While the microphones continue to remain spaced apart, the characteristics associated with the direction of the ears is lost due to not being placed within the cavity formed by the auricle **44**.

[**0053**] FIG. **2** further illustrates how each earpiece **38** includes an aforementioned loudspeaker **56**. The loudspeaker **56** can be of any conventional type (e.g., piezoelectric element, etc.). As is shown in FIG. **2**, the loudspeaker **56** receives audio signals from the processor **34** via the audio cable **40**. Conversely, the microphone **50** receives the ambient sound and converts such sound into an ambient sound signal that is provided to the processor **34** via the audio cable **40**.

[**0054**] As will be explained in more detail below with respect to FIGS. **3** and **4**, the processor **34** functions to combine the audio signal received from the mobile phone **10** with the ambient sound signal provided by the respective microphones **50**. The processor **34** then provides the combined signals to the loudspeaker **56** in each earpiece **38**. In such manner, each earpiece **38** is capable of reproducing the audio signal from the mobile phone **10** together with the ambient sound picked up by the corresponding microphone **50**. The spatial characteristics of the ambient sound are therefore preserved.

[**0055**] Referring again briefly to FIG. **1**, the headset **30** in the preferred embodiment is an integral, or self-contained unit. Specifically, the input **32**, processor **34** and earpieces **38** are fixedly connected to one another via audio cables **36**, **40**. Thus, the headset **30** represents a self-contained accessory that is not necessarily dependent upon a particular electronic equipment or any other accessory and/or attachment. The headset **30** includes its own processor **34** that obtains the ambient sound and combines the ambient sound with the audio from the electronic equipment to provide the desired listening experience.

[**0056**] Turning to FIG. **3**, shown is an exemplary embodiment of the processor **30**. As will be explained in more detail below with respect to FIG. **4**, the processor **30** includes an on/off switch **70** that allows the user to turn the processor **34** on and off. In the on position, the headset **30** functions to pick up the ambient sound and combine the ambient sound with the audio signal from the mobile telephone **10** so that both may be heard by the user. In the off position, the processor **34** essentially routes the audio signal from the mobile telephone directly to the earpieces **58** as in a conventional headset. The on/off switch **70** is shown as a slide switch, but it will be appreciated that virtually any type of suitable switch may be utilized without departing from the scope of the invention.

[**0057**] The processor **34** also includes a volume control switch **72** and mix switch **74**. The volume control switch **72** allows the user to control the volume of the audio reproduced by the headset **30** directly without having to adjust the output volume of the mobile phone **10**. The mix switch **74** allows the user to adjust a ratio by which the processor **34** combines the audio signal from the mobile telephone **10** and the ambient sound signal from the microphones **50**. By controlling the mix, the user can choose whether the earpieces **38** provide more or less of the ambient sound in relation to the audio signal. Depending on the situation, the user may choose to block most or all of the environmental sounds (e.g., in a crowded train) by substantially reducing the amount of ambient sound provided to the loudspeakers **56**. The user may choose to retain the ambient sound at a lower level in situations where it is desirable to maintain some contact with the environment, albeit at a reduced level (e.g., while in traffic). Still further, the user may choose to retain the ambient sound at a higher level under circumstances where it is desirable to retain complete contact with the environment (e.g., in one's living room).

[**0058**] The switches **72** and **74** as shown in FIG. **3** are membrane switches that serve to adjust the volume and mix up or down as a function of the particular arrow that is pressed. However, those having ordinary skill in the art will readily appreciate that virtually any other type suitable switch could also be used without departing from the scope of the invention. For example, switch **72** and/or switch **74** could be replaced with a rotary switch, slide switch, etc. As will also be appreciated, the switches **72** and/or **74** together with any or all of the circuitry described herein may be analog circuitry, digital circuitry, or any combination thereof. While the invention is described herein primarily in the context of an analog design, it will be readily appreciated that the circuitry could alternately be implemented via digital design or a combination thereof.

[**0059**] FIG. **4** is a schematic illustration of the processor **34**. The processor **34** is simplified so as to represent a single channel. Those having ordinary skill in the art, however, will appreciate that a stereo embodiment for handling left and right channel stereo signals provided to respective earpieces **38** involves simply a duplication of the circuit shown in FIG. **4**.

[**0060**] The mobile phone **10** provides an audio signal to the processor **34** via line **80** within the audio cable **36**. The audio signal on line **36** is input to an adder **82** included in the processor **34**. The output of the adder **82** is input to an adjustable gain amplifier **84** that amplifies the output of the

adder **82**. The output of the amplifier is provided to the earpieces **38** via line **86** within the audio cable **40**.

[**0061**] Ambient sound picked up by the microphones **50** is input to the processor **34** as an ambient sound signal on line **88** from the audio cable **40**. The ambient sound signal on line **88** is input to an adjustable gain amplifier **90** so as to amplify the ambient sound signal. The amplifier **90** outputs the ambient sound signal into an adjustable gain amplifier **91** whose gain is controlled using a level control switch in the form of the aforementioned mix switch **74**. The mix switch **74**, in this embodiment preferably a rheostat, controls the level of the amplified ambient sound signal from the amplifier **91** that is provided to another input of the adder **82**.

[**0062**] Accordingly, the adder **82** functions to combine the ambient sound signal with the audio signal from the mobile phone **10**. By way of adjusting the mix switch **74**, the user can control the relative amplitude or ratio of the ambient sound signal to the audio signal as represented by the output of the adder **82**. Therefore, the user can control the degree to which the ambient sound is represented in comparison to the audio signal.

[**0063**] The volume switch **72**, also preferably a rheostat in this embodiment, functions to adjust the gain of the amplifier **84**. Accordingly, the user may control the gain of the amplifier **84** which amplifies the combined audio and ambient sound signals. As a result, the user may control the overall volume of the sound reproduced by the headset.

[**0064**] In a preferred embodiment, the processor **34** may further includes an optional level detector circuit **92** that serves to detect the level of the audio signal received on line **80** from the mobile phone **10**. The level detector circuit **92** is designed to output a gain control signal on line **94** that is proportional to the level of the audio signal on line **80**. The gain control signal on line **94** serves to adjust the gain of the adjustable gain amplifier **90**. As a result, the processor **34** automatically adjusts the level of the ambient sound signal in proportion to changes in the level of the received audio signal. In this manner, even if the user adjusts the audio output volume of the mobile phone **10** or other electronic equipment, the mix ratio of the audio signal and the ambient sound signal will remain substantially constant. Although not shown, the level detector **92** preferably includes a low-pass filter for smoothing the response of the amplifier **90** (e.g., to avoid sudden changes in the level of the ambient sound due to sudden quiet/loud periods in the audio signal).

[**0065**] The processor **34** includes the aforementioned switch **70** which serves to turn power from a power supply **100** on and off to the remaining circuitry. The power supply **100** preferably is self contained, such as a battery. Alternatively, the processor **34** may be designed to receive power from the electronic equipment itself. The switch **70** also may include as a part thereof an optional switch **70***a*. The switch **70***a* is normally open during operation (switch **70** is on) so as to remain effectively an open circuit. When the switch **70** is off, switch **70***a* becomes closed. As a result, the audio signal on line **80** bypasses the circuitry within the processor **34** and is output directly to the earpieces **38** on line **86**.

[**0066**] Still further, the processor **34** may include a microphone **102** for picking up the voice of the user during hands-free communication with the mobile phone **10** using the headset **30**. The microphone **102** provides a voice signal to the mobile phone **10** via line **104** using conventional techniques.

[**0067**] FIG. **5** illustrates an alternative embodiment of the processor **34**. In this embodiment, the input **32** is replaced by a low-power wireless interface such as a Bluetooth transceiver **106**. The Bluetooth transceiver **106** can be programmed to carry out conventional communications between the headset **30** and the similarly equipped mobile phone **10** or other electronic equipment. In such embodiment, there is no need for an audio cable **36**.

[**0068**] Furthermore, the embodiments described herein can be modified without departing from the scope of the invention. For example, while the processor **34** is shown as being part of a housing connected in-line between the earpieces **38** and the input **32**, the processor **34** may instead be housed within part of the jack forming the input **32** and/or within the housing of the earpiece(s) **38**. Alternatively, in a Bluetooth embodiment the processor **34** may be incorporated within a small housing designed to fit behind the ear of the user similar to known Bluetooth headsets.

[**0069**] Although the invention has been shown and described with respect to certain preferred embodiments, it is obvious that equivalents and modifications will occur to others skilled in the art upon the reading and understanding of the specification. The present invention includes all such equivalents and modifications, and is limited only by the scope of the following claims.

1. A headset for reproducing audio, comprising:

an input that receives an audio signal from an electronic equipment;

at least one earpiece having an electro-acoustic speaker for converting electrical signals to audible sound;

at least one microphone that receives ambient sound and converts the ambient sound to an ambient sound signal; and

a processing circuit formed as an integral unit with the input and the at least one earpiece, the processing circuit including circuitry that combines the audio signal from the electronic equipment with the ambient sound signal from the at least one microphone and provides the combined signals to the at least one earpiece such that the electro-acoustic speaker reproduces the ambient sound in combination with audio from the audio signal.

2. The headset of claim 1, wherein the input comprises an electrical connector configured to connect directly to the electronic equipment.

3. The headset of claim 2, wherein the electrical connector comprises an audio plug type connector.

4. The headset of claim 2, wherein the processing circuitry is coupled to the electrical connector via a first audio cable and to the at least one earpiece via a second audio cable, all of which are part of the integral unit.

5. The headset of claim 2, wherein the electronic equipment is a mobile telephone.

6. The headset of claim 1, wherein the input comprises a low-power wireless interface that communicates with an interface included in the electronic equipment.

7. The headset of claim 6, wherein the low-power wireless interface is a Bluetooth interface.

8. The headset of claim 6, wherein the electronic equipment is a mobile telephone.

9. The headset of claim 1, wherein the headset comprises a pair of earpieces each including an electro-acoustic speaker for reproducing audio from the audio signal and the ambient sound.

10. The headset of claim 9, wherein the headset comprises a pair of microphones each included in a respective one of the pair of earpieces.

11. The headset of claim 1, wherein the at least one earpiece is an earbud-style earpiece.

12. The headset of claim 11, wherein the earbud-style earpiece includes the at least one microphone.

13. The headset of claim 12, wherein the earbud-style earpiece is configured to be inserted into an ear of a user with the microphone positioned within a cavity formed by the auricle of the ear.

14. A headset for reproducing audio, comprising:

an input that receives an audio signal from an electronic equipment;

at least one earpiece having an electro-acoustic speaker for converting electrical signals to audible sound;

at least one microphone that receives ambient sound and converts the ambient sound to an ambient sound signal; and

a processing circuit, the processing circuit including circuitry that combines the audio signal from the electronic equipment with the ambient sound signal from the at least one microphone and provides the combined signals to the at least one earpiece such that the electro-acoustic speaker reproduces the ambient sound in combination with audio from the audio signal,

wherein the at least one earpiece includes the at least one microphone, and the earpiece is configured to be inserted into an ear of a user with the microphone positioned within a cavity formed by the auricle of the ear.

15. The headset of claim 14, wherein the headset comprises a pair of earpieces each including a respective electro-acoustic speaker and corresponding microphone, the respective electro-acoustic speaker reproducing the ambient sound received by the corresponding microphone.

16. The headset of claim 14, wherein the processing circuit comprises mixture circuitry adjustable by a user to adjust a ratio by which the processing circuit combines the audio signal and the ambient sound signal.

17. The headset of claim 16, wherein the processing circuit comprises volume adjust circuitry adjustable by the user to adjust the volume of the combined signals independently of the ratio.

18. The headset of claim 16, wherein the processing circuit comprises gain control circuitry that compensates for changes in amplitude of the input signal such that the ratio remains constant.

19. The headset of claim 14, wherein the processing circuit comprises bypass circuitry allowing the input signal to pass to the at least one earpiece substantially without modification.

20. The headset of claim 14, wherein the processing circuit is formed as an integral unit with the input and the at least one earpiece.

21. A headset for reproducing audio, comprising:

an input that receives an audio signal from an electronic equipment;

at least one earpiece having an electro-acoustic speaker for converting electrical signals to audible sound;

at least one microphone that receives ambient sound and converts the ambient sound to an ambient sound signal; and

a processing circuit, the processing circuit including circuitry that combines the audio signal from the electronic equipment with the ambient sound signal from the at least one microphone and provides the combined signals to the at least one earpiece such that the electro-acoustic speaker reproduces the ambient sound in combination with audio from the audio signal,

wherein the processing circuit comprises mixture circuitry adjustable by a user to adjust a ratio by which the processing circuit combines the audio signal and the ambient sound signal.

22. The headset of claim 21, wherein the processing circuit comprises volume adjust circuitry adjustable by the user to adjust the volume of the combined signals independently of the ratio.

23. The headset of claim 21, wherein the processing circuit comprises gain control circuitry that compensates for changes in amplitude of the input signal such that the ratio remains constant.

24. The headset of claim 21, wherein the processing circuit comprises bypass circuitry allowing the input signal to pass to the at least one earpiece substantially without modification.

25. The headset of claim 21, wherein the at least one earpiece includes the at least one microphone, and the earpiece is configured to be inserted into an ear of a user with the microphone positioned within a cavity formed by the auricle of the ear.

26. The headset of claim 21, wherein the processing circuit is formed as an integral unit with the input and the at least one earpiece.

* * * * *