US009641841B2

(12) **United States Patent**
Norkin et al.

(10) **Patent No.: US 9,641,841 B2**
(45) **Date of Patent: May 2, 2017**

(54) **DEBLOCKING FILTERING CONTROL**

(75) Inventors: **Andrey Norkin**, Solna (SE); **Kenneth Andersson**, Gävle (SE); **Rickard Sjöberg**, Stockholm (SE)

(73) Assignee: **Telefonaktiebolaget LM Ericsson (publ)**, Stockholm (SE)

(*) Notice: Subject to any disclaimer, the term of this patent is extended or adjusted under 35 U.S.C. 154(b) by 700 days.

(21) Appl. No.: **14/001,627**

(22) PCT Filed: **Dec. 16, 2011**

(86) PCT No.: **PCT/SE2011/051526**
§ 371 (c)(1),
(2), (4) Date: **Aug. 26, 2013**

(87) PCT Pub. No.: **WO2012/118421**
PCT Pub. Date: **Sep. 7, 2012**

(65) **Prior Publication Data**

US 2013/0329814 A1 Dec. 12, 2013

Related U.S. Application Data

(60) Provisional application No. 61/447,862, filed on Mar. 1, 2011.

(51) **Int. Cl.**
H04N 19/117 (2014.01)
H04N 19/86 (2014.01)
(Continued)

(52) **U.S. Cl.**
CPC ***H04N 19/00909*** (2013.01); ***H04N 19/117*** (2014.11); ***H04N 19/14*** (2014.11);
(Continued)

(58) **Field of Classification Search**
None
See application file for complete search history.

(56) **References Cited**

U.S. PATENT DOCUMENTS

2004/0101059 A1* 5/2004 Joch H04N 19/159 375/240.29
2005/0013363 A1* 1/2005 Cho H04N 19/105 375/240.12
(Continued)

FOREIGN PATENT DOCUMENTS

EP 2681913 B1 11/2015
JP 2005123732 A 5/2005
(Continued)

OTHER PUBLICATIONS

An, Jicheng et al., "CE 8 subtest1: Improved deblocking filter", IEEE, Joint Collaborative Team on Video Coding (JCT-VC) of ITU-T SG16 WP3 and ISO/IEC JTC1/SC29/WG11, 4th Meeting: Daegu, Korea, Jan. 2011, 1-8.
(Continued)

Primary Examiner — William C Vaughn, Jr.
Assistant Examiner — Michael J Hess
(74) *Attorney, Agent, or Firm* — Murphy, Bilak & Homiller, PLLC

(57) **ABSTRACT**

A first filter decision value is calculated for a block (**10**) of pixels (**11**, **13**, **15**, **17**) in a video frame based on pixel values of pixels (**11**, **13**, **15**) in a first line (**12**) of pixels (**11**, **13**, **15**, **17**) in the block (**10**). A second filter decision value is also calculated for the block (**10**) based on pixel values of pixels (**21**, **23**, **25**, **27**) in a corresponding first line (**22**) of pixels (**21**, **23**, **25**, **27**) in a neighboring block (**20**) in the video frame. The first filter decision value is used to determine how many pixels in a line (**12**) of pixels (**11**, **13**, **15**, **17**) in the block (**10**) to filter relative to a block boundary (**1**) between the block (**10**) and the neighboring block (**20**). The second filter decision value is used to determine how many pixels in a corresponding line (**22**) of pixels (**21**, **23**, **25**, **27**)
(Continued)

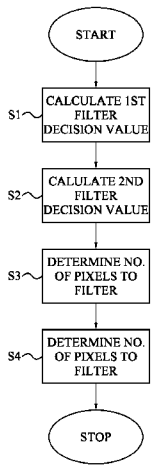

in the neighboring block to filter relative to the block boundary (**1**).

16 Claims, 11 Drawing Sheets

(51) **Int. Cl.**
H04N 19/176 (2014.01)
H04N 19/14 (2014.01)
H04N 19/82 (2014.01)

(52) **U.S. Cl.**
CPC ***H04N 19/176*** (2014.11); ***H04N 19/82*** (2014.11); ***H04N 19/86*** (2014.11)

(56) **References Cited**

U.S. PATENT DOCUMENTS

2005/0276505 A1* 12/2005 Raveendran H04N 19/176 382/268
2006/0078048 A1* 4/2006 Bjontegaard H04N 19/139 375/240.03
2009/0285308 A1* 11/2009 Panchapakesan H04N 19/61 375/240.24
2010/0142844 A1 6/2010 Pereira et al.

FOREIGN PATENT DOCUMENTS

JP 2010141883 A 6/2010
WO 2012044074 A2 4/2012

OTHER PUBLICATIONS

An, Jicheng, "TEIO Subtestl: Improved Deblocking Filter", Joint Collaborative Team on Video Coding, of ITU-T SG16 WP3 and ISO/IEC JTC1/SC29/WG11, 3rd Meeting, Guangzhou, CN, Oct. 7-15, 2010, 1-8.
List, Peter et al., "Adaptive Deblocking Filter", IEEE Transactions on Circuits and Systems for Video Technology, vol. 3, Issue 7, Jul. 2003, 614-619.
Ugur, Kemal et al., "Appendix to Description of video coding technology proposal by Tandberg Nokia Ericsson", Joint Collaborative Team on Video Coding (JCT-VC) of ITU-T SG16 WP3 and ISO/IEC JTC1/SC29/WG11, Dresden, DE, Apr. 15-23, 2010, 1-55.
Ugur, Kemal et al., "High Performance, Low Complexity Video Coding and the Emerging HEVC Standard", IEEE Transactions on Circuits and Systems for Video Technology, vol. 20, No. 12, Dec. 2010, 1688-1697.
Ikeda, Masaru et al. "Parallel Deblocking Filter." Joint Collaborative Team on Video Coding (JCT-VC) of ITU-T SG 16 WP3 and ISO/IEC JTCJ/SC29/WG, Document to JCT-VC, 11 4th Meeting. Jan. 2011. pp. 1-7.
Narroschke, Matthias. "Reduction of Operations in the Critical Path of the Deblocking Filter." Joint Collaborative Team on Video Coding (JCT-VC) of ITU-T SG 16 WP3 and ISO/IEC JTC1/SC29/WG, Document to JCT-VC, 11 4th Meeting. Jan. 20-28, 2011. pp. 1-15.
Norkin, Andrey et al. "CE12.1: Ericsson Deblocking Filter." Joint Collaborative Team on Video Coding (JCT-VC) of ITU-T SG 16 WP3 and ISO/I EC JTC1/SC29/WG, Document to JCT-VC, 11 5th Meeting: Geneva, Mar. 16-23, 2011. pp. 1-17.
Norkin, Andrey et al. "Development of HEVC Deblocking Filter." Joint Collaborative Team on Video Coding (JCT-VC) of ITU-T SG16 WP3 and ISO/IEC JTC1/SC29/WG, Document to JCT-VC, 11 4th Meeting: Daegu, KR. Jan. 20-28, 2011. pp. 1-4.

* cited by examiner

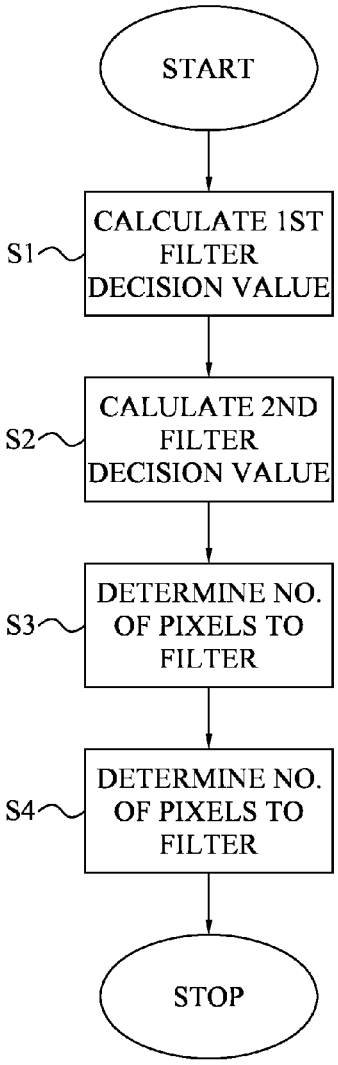

Fig. 1

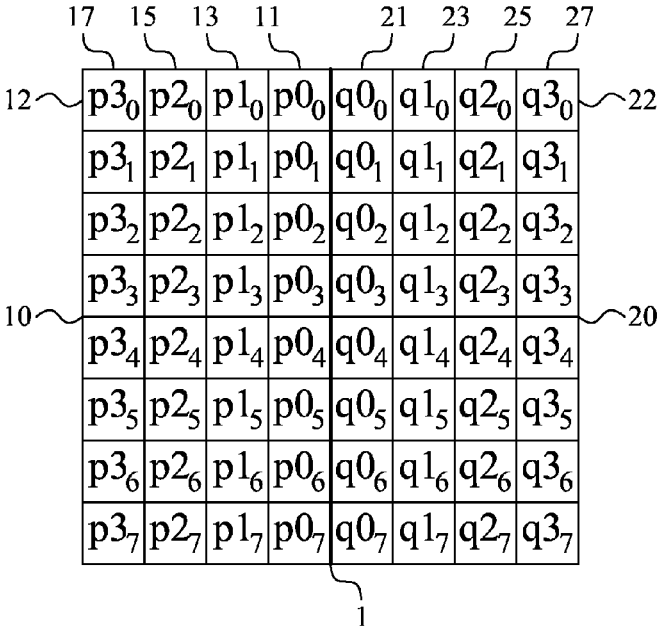

Fig. 2A

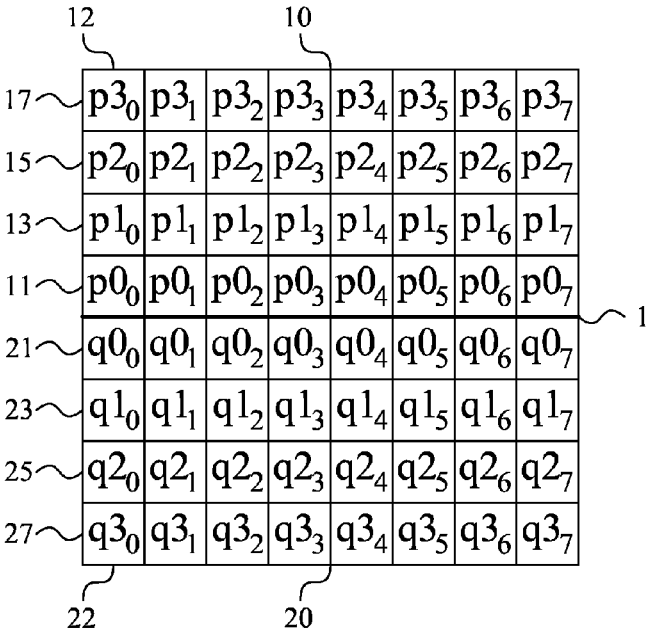

Fig. 2B

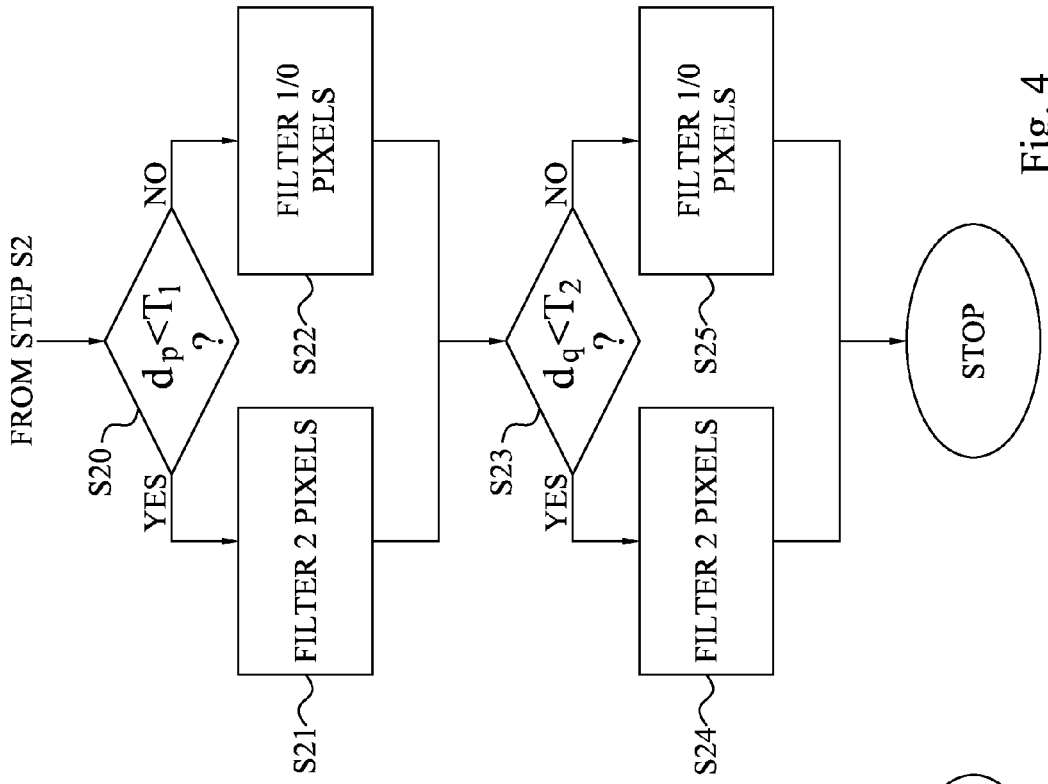
FROM STEP S2
S20
$d_p<T_1$?
YES
NO
S21
FILTER 2 PIXELS
S22
FILTER 1/0 PIXELS
S23
$d_q<T_2$?
YES
NO
S24
FILTER 2 PIXELS
S25
FILTER 1/0 PIXELS
STOP

Fig. 4

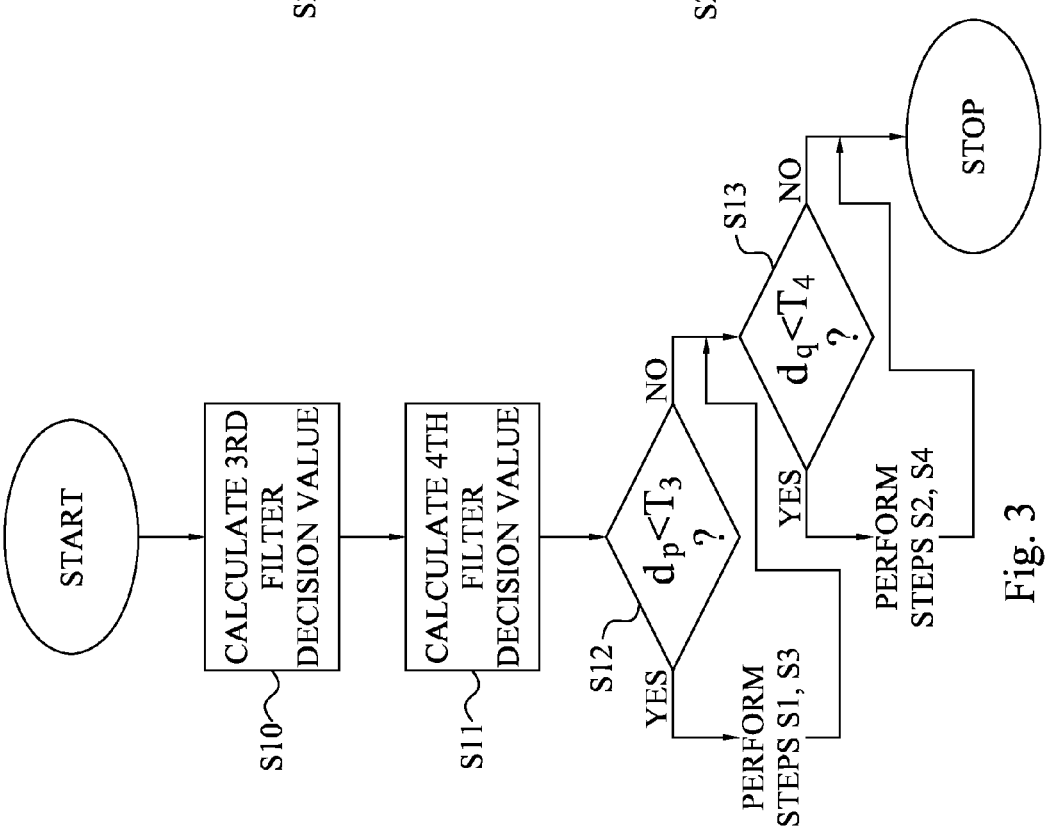
START
S10
CALCULATE 3RD FILTER DECISION VALUE
S11
CALCULATE 4TH FILTER DECISION VALUE
S12
$d_p<T_3$?
YES
NO
PERFORM STEPS S1, S3
S13
$d_q<T_4$?
YES
NO
PERFORM STEPS S2, S4
STOP

Fig. 3

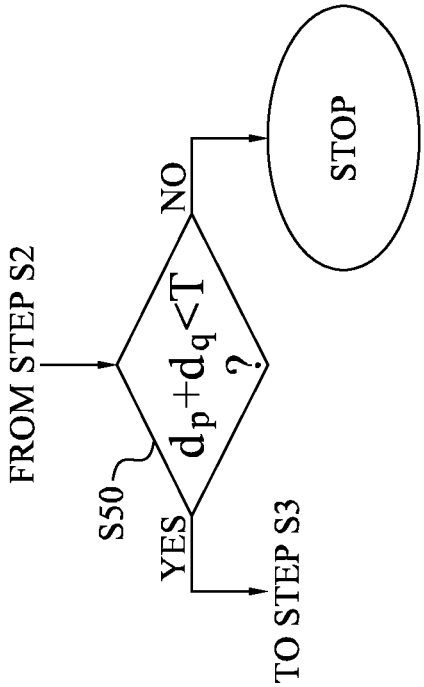
FROM STEP S2
S50
$d_p+d_q<T$?
YES
NO
TO STEP S3
STOP

Fig. 7

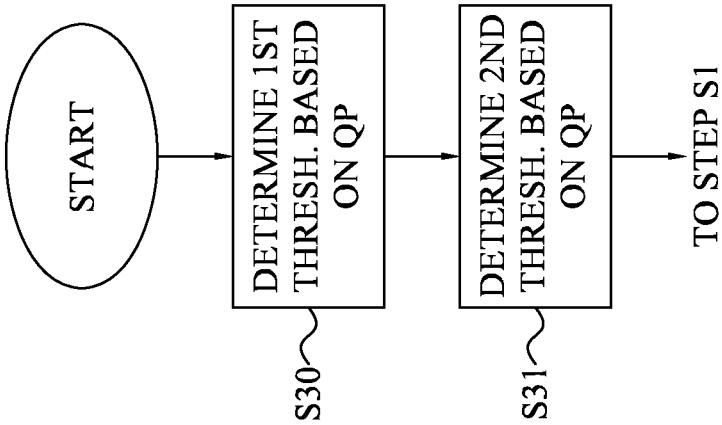
START
S30
DETERMINE 1ST THRESH. BASED ON QP
S31
DETERMINE 2ND THRESH. BASED ON QP
TO STEP S1

Fig. 5

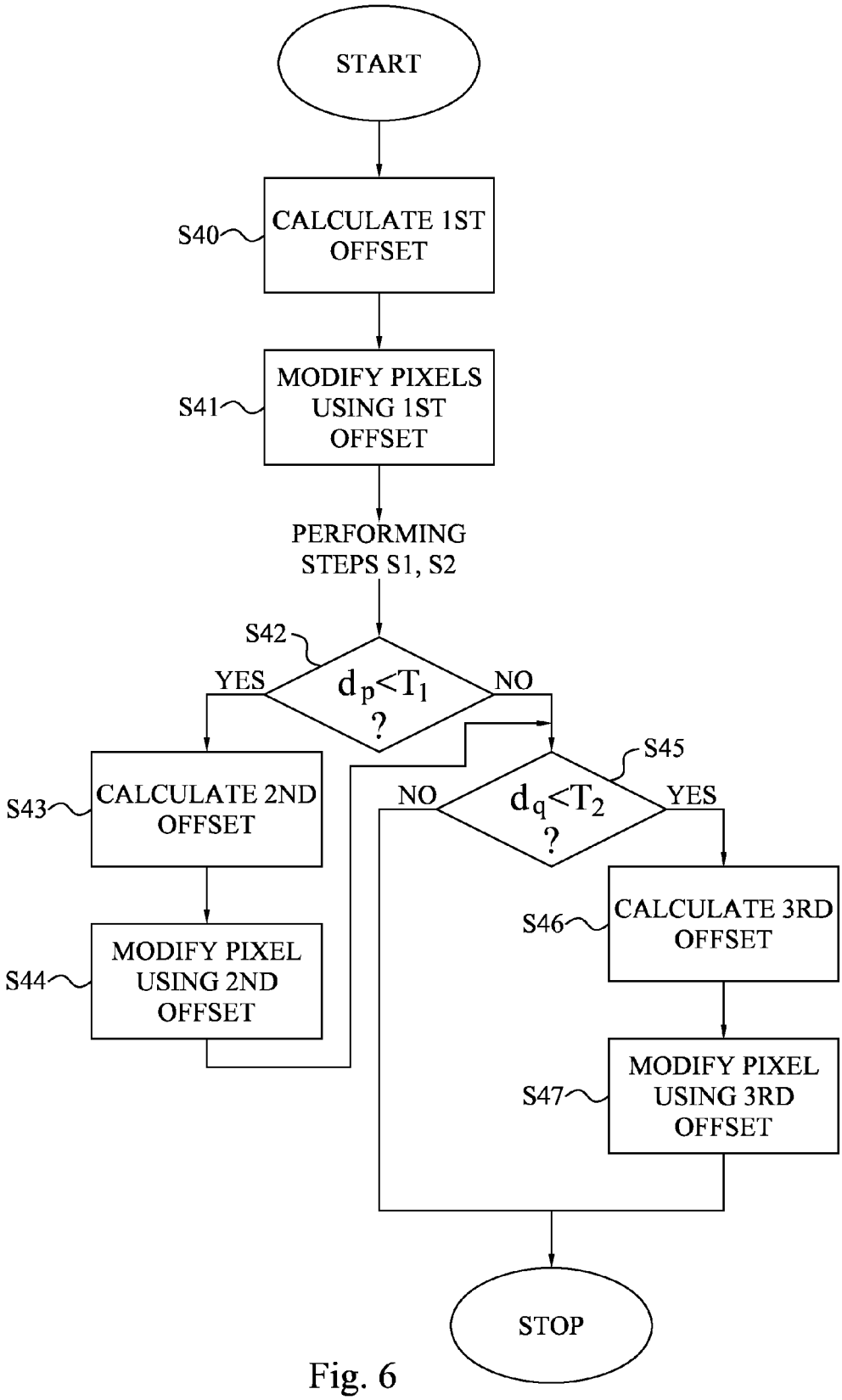
START
S40
CALCULATE 1ST OFFSET
S41
MODIFY PIXELS USING 1ST OFFSET
PERFORMING STEPS S1, S2
S42
$d_p<T_1$?
YES
NO
S43
CALCULATE 2ND OFFSET
S44
MODIFY PIXEL USING 2ND OFFSET
S45
$d_q<T_2$?
NO
YES
S46
CALCULATE 3RD OFFSET
S47
MODIFY PIXEL USING 3RD OFFSET
STOP

Fig. 6

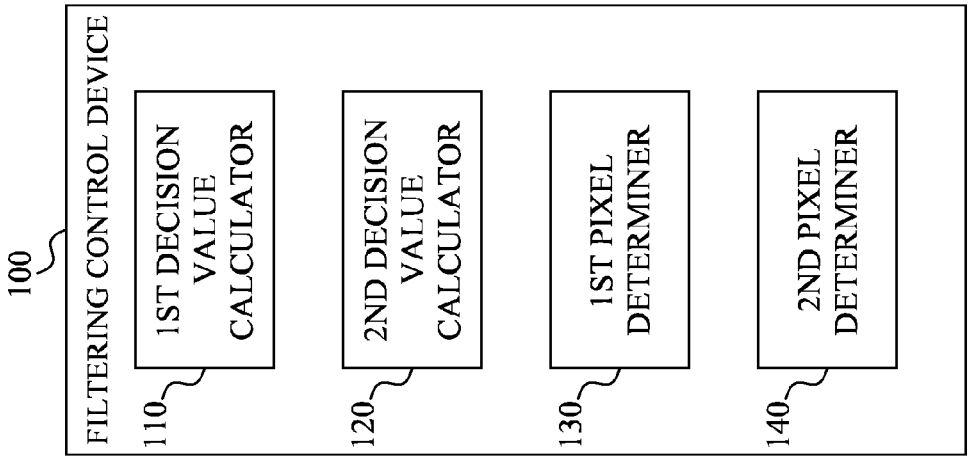
100
FILTERING CONTROL DEVICE
110
1ST DECISION VALUE CALCULATOR
120
2ND DECISION VALUE CALCULATOR
130
1ST PIXEL DETERMINER
140
2ND PIXEL DETERMINER

Fig. 8

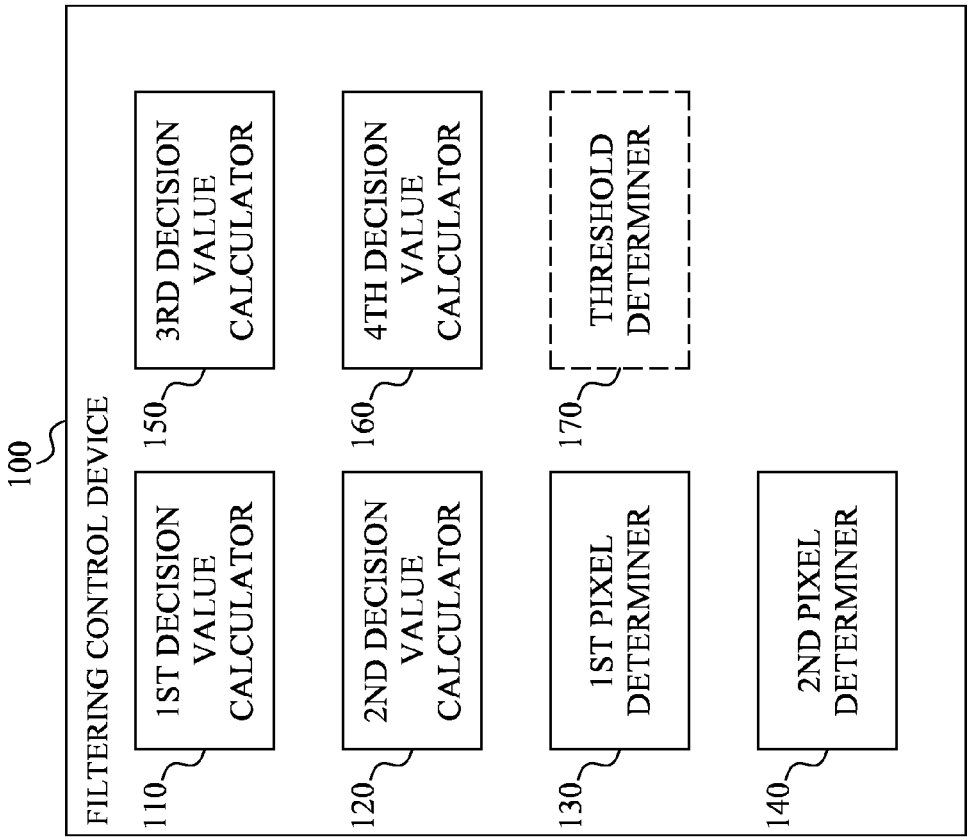
100
FILTERING CONTROL DEVICE
110
1ST DECISION VALUE CALCULATOR
150
3RD DECISION VALUE CALCULATOR
120
2ND DECISION VALUE CALCULATOR
160
4TH DECISION VALUE CALCULATOR
130
1ST PIXEL DETERMINER
170
THRESHOLD DETERMINER
140
2ND PIXEL DETERMINER

Fig. 9

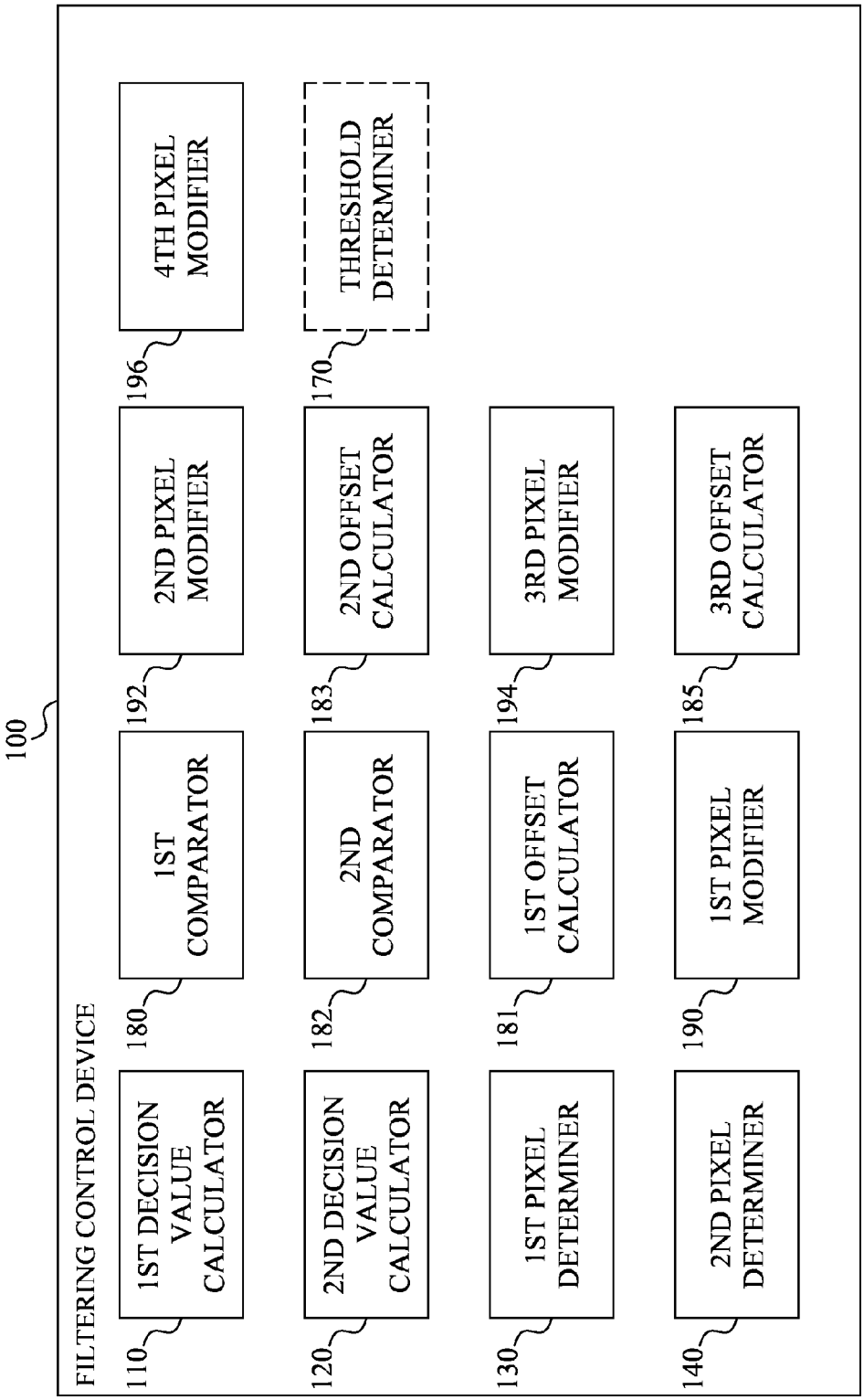
100
FILTERING CONTROL DEVICE
110
1ST DECISION VALUE CALCULATOR
180
1ST COMPARATOR
192
2ND PIXEL MODIFIER
196
4TH PIXEL MODIFIER
120
2ND DECISION VALUE CALCULATOR
182
2ND COMPARATOR
183
2ND OFFSET CALCULATOR
170
THRESHOLD DETERMINER
130
1ST PIXEL DETERMINER
181
1ST OFFSET CALCULATOR
194
3RD PIXEL MODIFIER
140
2ND PIXEL DETERMINER
190
1ST PIXEL MODIFIER
185
3RD OFFSET CALCULATOR

Fig. 10

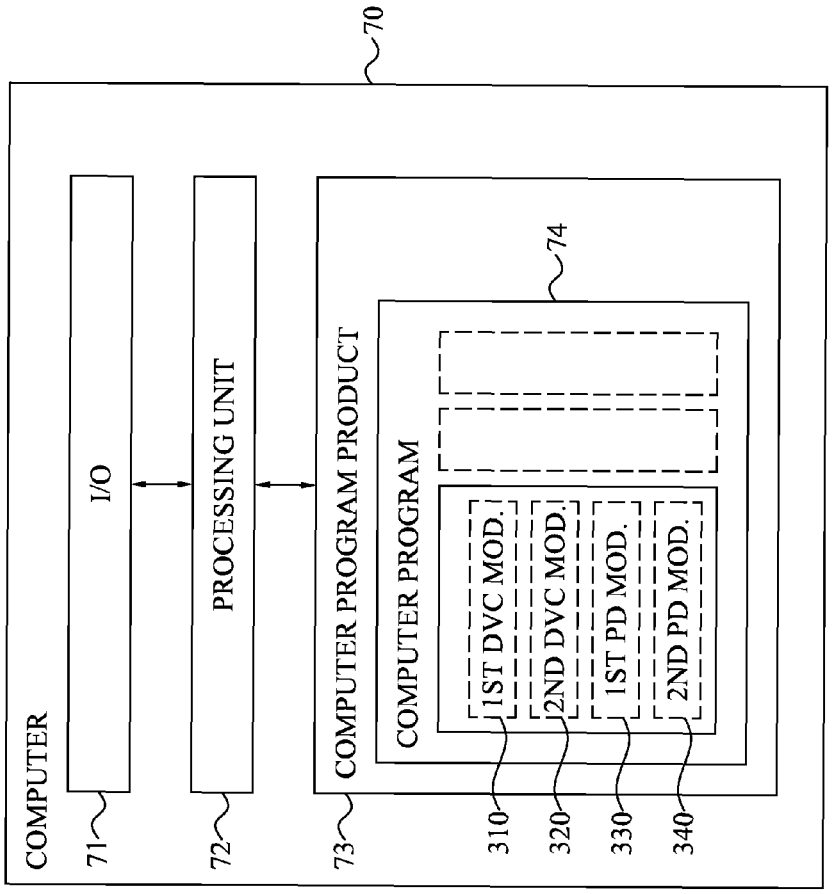
70
COMPUTER
I/O
PROCESSING UNIT
COMPUTER PROGRAM PRODUCT
COMPUTER PROGRAM
74
1ST DVC MOD.
2ND DVC MOD.
1ST PD MOD.
2ND PD MOD.
71
72
73
310
320
330
340

Fig. 12

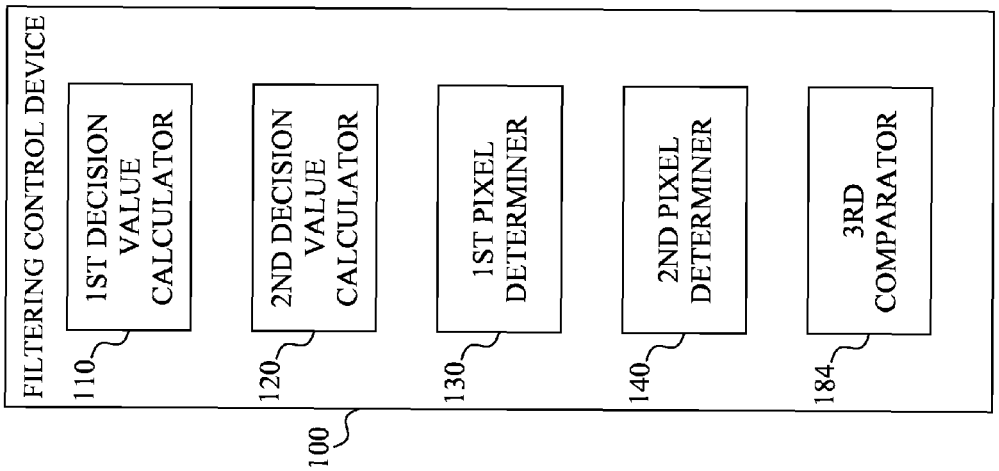
FILTERING CONTROL DEVICE
1ST DECISION VALUE CALCULATOR
2ND DECISION VALUE CALCULATOR
1ST PIXEL DETERMINER
2ND PIXEL DETERMINER
3RD COMPARATOR
110
120
130
140
184
100

Fig. 11

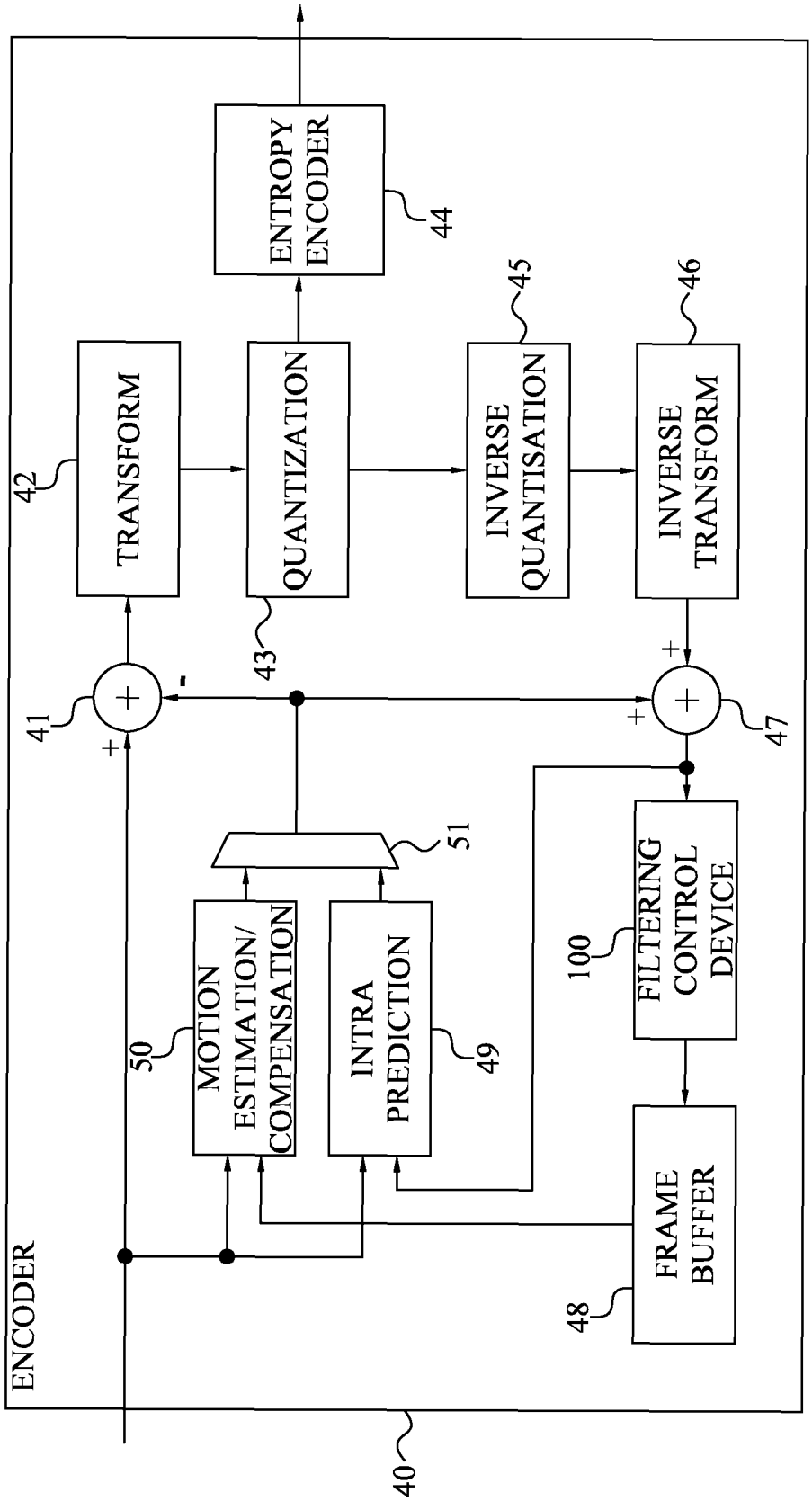
ENCODER
40
41
42
TRANSFORM
43
QUANTIZATION
44
ENTROPY ENCODER
45
INVERSE QUANTISATION
46
INVERSE TRANSFORM
47
48
FRAME BUFFER
49
INTRA PREDICTION
50
MOTION ESTIMATION/ COMPENSATION
51
100
FILTERING CONTROL DEVICE

Fig. 13

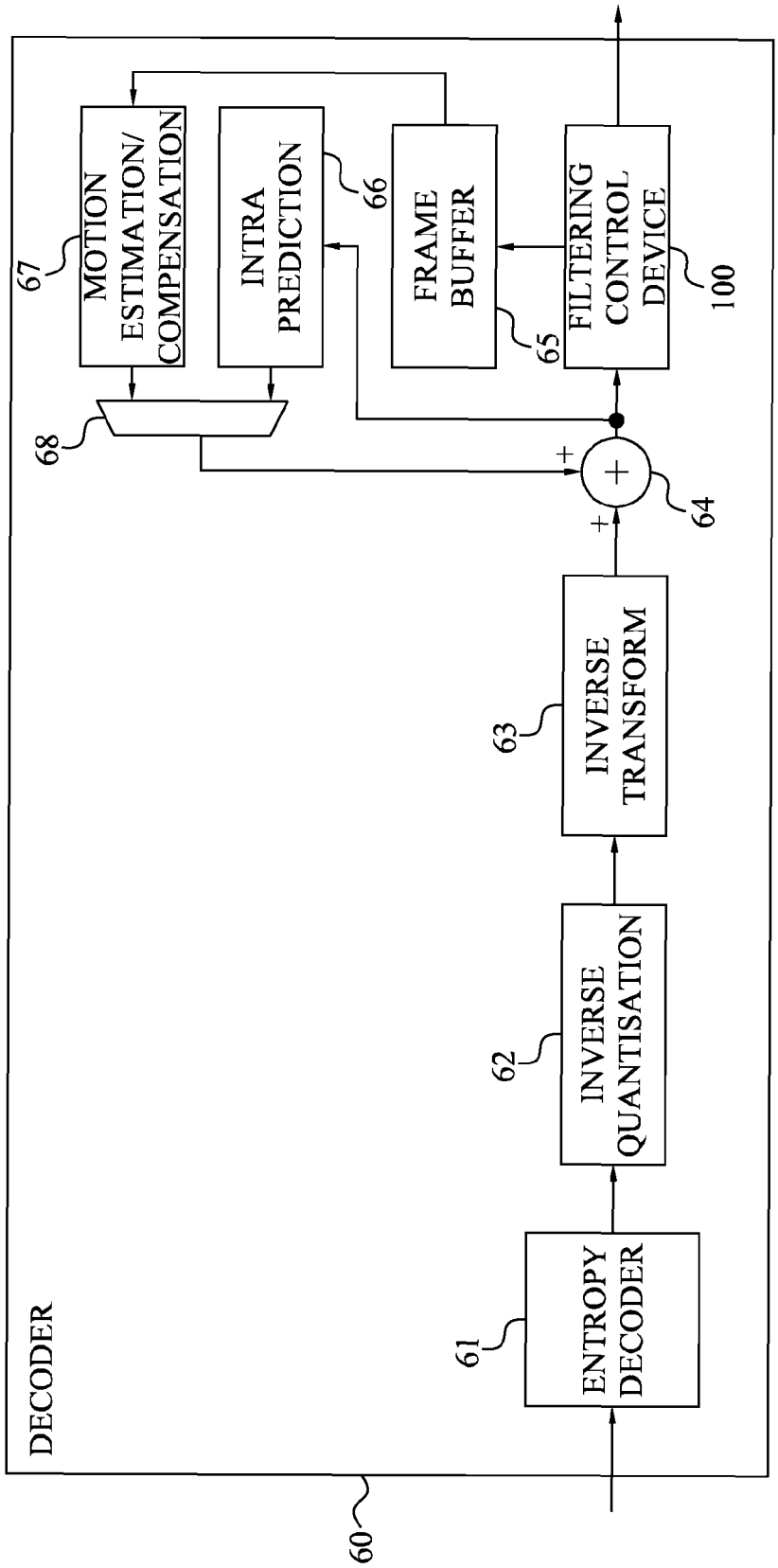
DECODER
60
ENTROPY DECODER
61
INVERSE QUANTISATION
62
INVERSE TRANSFORM
63
+
+
64
68
MOTION ESTIMATION/ COMPENSATION
67
INTRA PREDICTION
66
FRAME BUFFER
65
FILTERING CONTROL DEVICE
100

Fig. 14

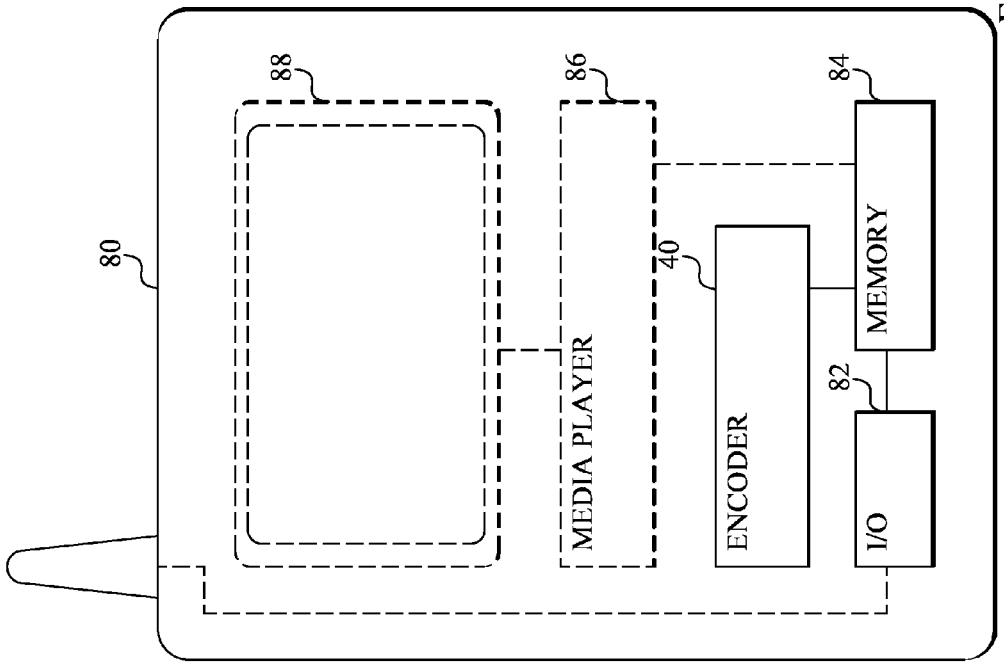
80
88
86
MEDIA PLAYER
40
ENCODER
84
MEMORY
82
I/O

Fig. 16

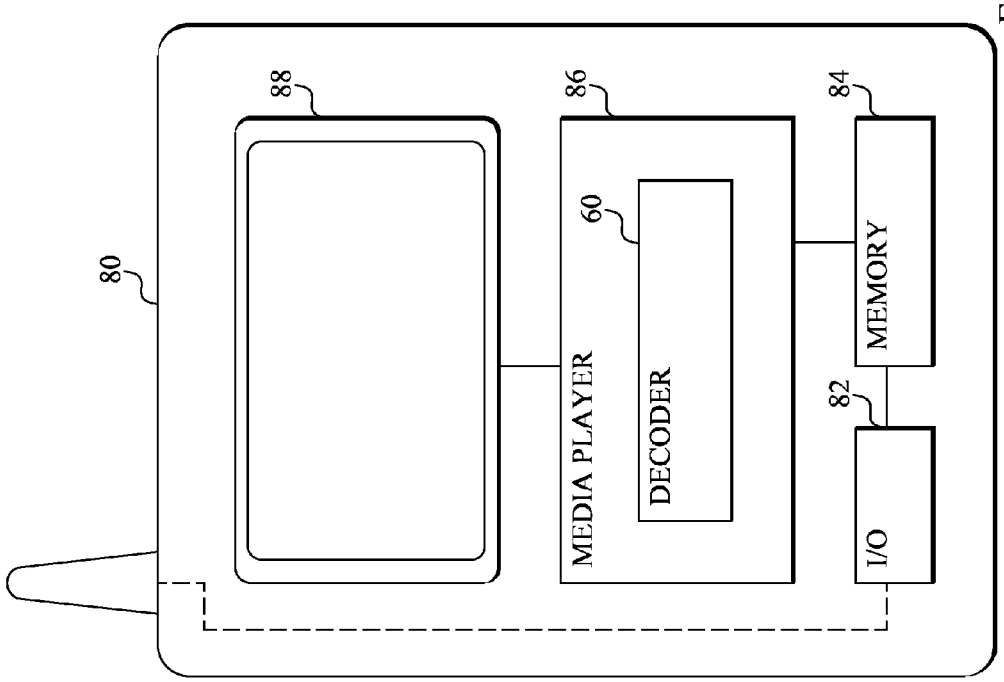
80
88
86
MEDIA PLAYER
60
DECODER
84
MEMORY
82
I/O

Fig. 15

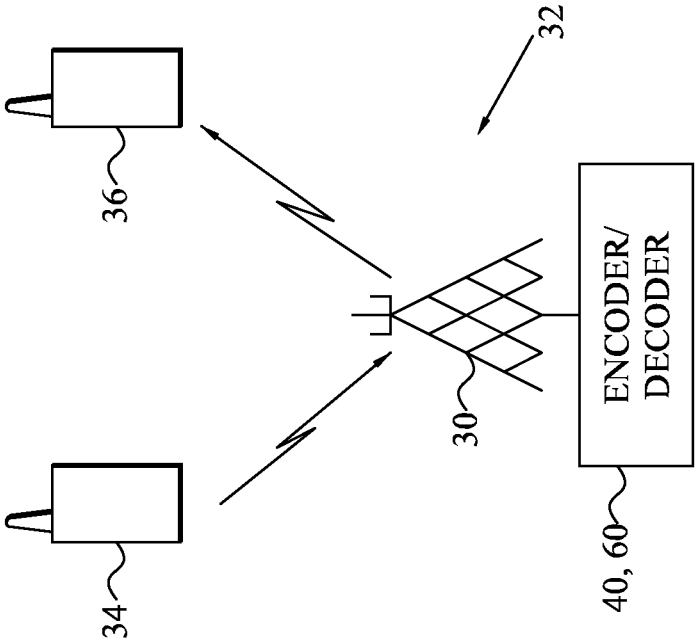

Fig. 17

DEBLOCKING FILTERING CONTROL

TECHNICAL FIELD

The present embodiments generally relate to filtering control and in particular to controlling deblocking filtering over block boundaries in a video frame.

BACKGROUND

Deblocking filters are used in the video coding standards in order to combat blocking artifacts. The blocking artifacts arise because the original video frames are split into blocks which are processed relatively independently. The blocking artifacts can, for instance, arise due to different intra predictions of the blocks, quantization effects and motion compensation. Two particular variants of deblocking are described below.

In state of the art video coding, such as H.264, there is a deblocking filter, also denoted loop filter, after prediction and residual reconstruction, but before storage of the reconstruction for later reference when encoding or decoding the subsequent frames. The deblocking filtering consists of several steps such as filter decisions, filtering operations, a clipping function and changes of pixel values. The decision to filter the border or not is made based on evaluation of several conditions. Filter decisions depend on macroblock (MB) type, motion vector (MV) difference between neighboring blocks, whether neighboring blocks have coded residuals and on the local structure of the current and/or neighboring blocks.

Then the amount of filtering for a pixel depends, among others, on the position of that pixel relative to the block border or boundary and on the quantization parameter (QP) value used for residual coding.

The filter decision is based on comparing three pixel differences with thresholds. The thresholds are adapted to the quantization parameter (QP). For instance, assume a vertical block boundary of

$$abcd|efgh$$

where a, b c and d denote the pixel values of the pixels of a row of pixels in the current block and e, f, g and h denote the corresponding pixel values of the pixels of a corresponding row of pixels in the neighboring block. If the following conditions are fulfilled the filter decision is positive, e.g. abs(d-e)<thr1, abs(c-d)<thr2, and abs(e-f)<thr2, where thr1 and thr2 are adapted based on QP.

There are two filtering modes in H.264. In the first filtering mode, referred to as normal filtering, filtering can be described with a delta value with which filtering changes the current value. The filtering for the pixels closest to the block boundary is d'=d+delta and e'=e−delta, where delta has been clipped off to a threshold ±thr3 to a value that is constrained by the QP. More filtering is thereby allowed for high QP than for low QP. Clipping can be described as delta_clipped=max(−thr3, min(thr3, delta)), where thr3 is controlling the filter strength. A larger value of thr3 means that the filtering is stronger which means that a stronger low-pass filtering effect will happen.

The filter strength can be increased if any of the following two conditions also holds, e.g. abs(b-d)<thr2 and abs(e-g)<thr2. The filter strength is adapted by clipping the delta less, e.g. allow for more variation.

The second filtering mode, referred to as strong filtering, is applied for intra macroblock boundaries only, when the following condition is fulfilled abs(d-e)<thr¼.

For more information of deblocking filtering in H.264 reference is made to List et al., Adaptive Deblocking Filter, *IEEE Transactions on Circuits and Systems for Video Technology*, vol. 13, no. 7, July 2003.

In the draft HEVC (High Efficiency Video Coding) specification "Test Model under Consideration", ITU-T SG16 WP3 document, JCTVC-B205, Chapter 6.5 In-loop filter process, the deblocking filter works differently from H.264. The filtering is performed if at least one of the blocks on the side of the boundary is intra, or has non-zero coefficients, or the difference between the motion vector components of the blocks is greater or equal to one integer pixel. For example, when filtering the border between the blocks with a vertical block boundary of

$$p3_i\, p2_i\, p1_i\, p0_i|q0_i\, q1_i\, q2_i\, q3_i$$

with pj_i denoting the pixel value of pixel number j of row number i in the current block and qj_i denoting the pixel value of pixel number j of row number i in the neighboring block, i=0 . . . 7, j=0 . . . 3, then the following condition should also be satisfied:

$$d=|p2_2-2\times p1_2+p0_2|+|q2_2-2\times q1_2+q0_2|+|p2_5-2\times p1_5+p0_5|+|q2_5-2\times q1_5+q0_5|<\beta$$

where β depends on QP. In the above mentioned HEVC specification, there is a table of β, where β increases with QP.

If the conditions are fulfilled and filtering is done between the current block and the neighboring block, one of two types of filtering is performed, referred to as weak and strong filtering, respectively. The choice between the strong and the weak filtering is done separately for each line depending on the following conditions. For each line i=0 . . . 7, the strong filtering is performed if all the following conditions are true, otherwise, weak filtering is performed:

$$d<(\beta>>2)$$

$$(|p3_i-p0_i|+|q0_i-q3_i|)<(\beta>>3)$$

$$|p0_i-q0_i|<((5\times t_C+1)>>1)$$

where t_C and β depend on QP and >> denotes a night shift operator.

Weak filtering is performed based on the above conditions. The actual filtering works by computing an offset (Δ), adding it to the original pixel value and clip the sum to a filtered output pixel value in the range of 0-255:

$$\Delta=\mathrm{Clip}(-t_C,t_C,(13\times(q0_i-p0_i)+4\times(q1_i-p1_i)-5\times(q2_i-p2_i)+16)>>5))$$

$$p0_i=\mathrm{Clip}_{0\text{-}255}(p0_i+\Delta)$$

$$q0_i=\mathrm{Clip}_{0\text{-}255}(q0_i-\Delta)$$

$$p1_i=\mathrm{Clip}_{0\text{-}255}(p1_i+\Delta/2)$$

$$q1_i=\mathrm{Clip}_{0\text{-}255}(q1_i-\Delta/2)$$

where the clip function Clip(A, B, x) is defined as Clip(A, B, x)=A if x<A, Clip(A, B, x)=B if x>B and Clip(A, B, x)=x if A≤x≤B and $\mathrm{Clip}_{0\text{-}255}(x)$ is defined as Clip(0, 255, x).

Strong filtering mode is performed by the following set of operations:

$$p0_i=\mathrm{Clip}_{0\text{-}255}((p2_i+2\times p1_i+2\times p0_i+2\times q0_i+q1_i+4)>>3)$$

$$q0_i=\mathrm{Clip}_{0\text{-}255}((p1_i+2\times p0_i+2\times q0_i2\times q1_i+q2_i+4)>>3)$$

$$p1_i=\mathrm{Clip}_{0\text{-}255}((p2_i+p1_i+p0_i+q0_i+2)>>2)$$

$$q1_i = \mathrm{Clip}_{0\text{-}255}((p0_i+q0_i+q1_i+q2_i+2)>>2)$$

$$p2_i = \mathrm{Clip}_{0\text{-}255}((2\times p3_i+3\times p2_i+p1_i+p0_i+q0_iA)>>3)$$

$$q2_i = \mathrm{Clip}_{0\text{-}255}((p0_i+q0_i+q1_i+3\times q2_i+2\times q3_i+4)>>3)$$

Deblocking filtering decisions according to HEVC can lead to inaccurate deblocking filtering over block boundaries for certain blocks. In particular neighboring blocks having different levels of local structures could be handled incorrectly in HEVC by filtering one of the blocks too much to thereby represses and filter away local structures in the block.

SUMMARY

Hence, there is a need for an efficient deblocking filtering control that can be used to reduce blocking artifacts at block boundaries and that does not have the above mentioned drawbacks.

It is a general objective to provide an efficient deblocking filtering control.

It is a particular objective to provide asymmetric filtering decisions over a block boundary.

An aspect of the embodiments relates to a method for filtering control applicable to a block of multiple pixels in a video frame, where each pixel has a respective pixel value. The method comprises calculating a first filter decision value for the block based at least on $|p2_i-2p1_i+p0_i|$, wherein $p0_i$ denotes a pixel value of a pixel closest to, in a first line of pixels in the block, a block boundary to a neighboring block of multiple pixels in the video frame, $p1_i$ denotes a pixel value of a pixel next closest to, in the first line of pixels, the block boundary and $p2_i$ denotes a pixel value of a pixel second next closest to, in the first line of pixels, the block boundary. The method also comprises calculating a second filter decision value for the block based at least on $|q2_i-2q1_i+q0_i|$, wherein $q0_i$ denotes a pixel value of a pixel in the neighboring block closest to, in a corresponding first line of pixels in the neighboring block, the block boundary, $q1_i$ denotes a pixel value of a pixel of the neighboring block next closest to, in the corresponding first line of pixels, the block boundary and $q2_i$ denotes a pixel value of a pixel in the neighboring block second next closest to, in the corresponding first line of pixels, the block boundary. The first filter decision value is used to determine how many pixels in a line of pixels in the block to filter relative to the block boundary and the second filter decision value is correspondingly used to determine how many pixels in a corresponding line of pixels in the neighboring block to filter relative to the block boundary.

Another aspect of the embodiments defines a filtering control device comprising a first decision value calculator configured to calculate a first filter decision value for a block of multiple pixels in a video frame based at least on $|p2_i-2p1_i+p0_i|$, wherein $p0_i$ denotes a pixel value of a pixel closest to, in a first line of pixels in the block, a block boundary to a neighboring block of multiple pixels in the video frame, $p1_i$ denotes a pixel value of a pixel next closest to, in the first line of pixels, the block boundary and $p2_i$ denotes a pixel value of a pixel second next closest to, in the first line of pixels, the block boundary. The filtering control device also comprises a second decision value calculator configured to calculate a second filter decision value for the block based at least on $|q2_i-2q1_i+q0_i|$, wherein $q0_i$ denotes a pixel value of a pixel in the neighboring block closest to, in a corresponding first line of pixels in the neighboring block, the block boundary, $q1_i$ denotes a pixel value of a pixel of the neighboring block next closest to, in the corresponding first line of pixels, the block boundary and $q2_i$ denotes a pixel value of a pixel in the neighboring block second next closest to, in the corresponding first line of pixels, the block boundary. A first pixel determiner is configured to determine how many pixels in a line of pixels in the block to filter relative to the block boundary based on the first filter decision value calculated by the first decision value calculator. The filtering control device further comprises a second pixel determiner configured to determine how many pixels in a corresponding line of pixels in the neighboring block to filter relative to the block boundary based on the second filter decision value calculated by the second decision value calculator.

Further aspects of the embodiments relate to an encoder comprising a filtering control device as defined above and a decoder comprising a filtering control device as defined above. Yet another aspect defines a user equipment comprising a memory configured to store video frames and an encoder with a filtering control device as defined above to encode the video frames into encoded video frames, which are stored in the memory. A further aspect defines a user equipment comprising a memory configured to store encoded video frames and a decoder with a filtering control device as defined above to decode the encoded video frames into decoded video frames. A media player of the user equipment is configured to render the decoded video frames into video data displayable on a display.

Yet another aspect relates to a computer program for filtering control of a block of multiple pixels in a video frame, where each pixel has a respective pixel value. The computer program comprises code means which when run on a computer causes the computer to calculate a first filter decision value for the block based at least on $|p2_i-2p1_i+p0_i|$, wherein $p0_1$ denotes a pixel value of a pixel closest to, in a first line of pixels in the block, a block boundary to a neighboring block of multiple pixels in the video frame, $p1_i$ denotes a pixel value of a pixel next closest to, in the first line of pixels, the block boundary and $p2_i$ denotes a pixel value of a pixel second next closest to, in the first line of pixels, the block boundary. The computer also comprises code means which causes the computer to calculate a second filter decision value for the block based at least on $|q2_i-2q1_i+q0_i|$, wherein $q0_i$ denotes a pixel value of a pixel in the neighboring block closest to, in a corresponding first line of pixels in the neighboring block, the block boundary, $q1_i$ denotes a pixel value of a pixel of the neighboring block next closest to, in the corresponding first line of pixels, the block boundary and $q2_i$ denotes a pixel value of a pixel in the neighboring block second next closest to, in the corresponding first line of pixels, the block boundary. The computer program comprises code means which causes the computer to determine how many pixels in a line of pixels in the block to filter relative to the block boundary based on the first filter decision value and determine how many pixels in a corresponding line of pixels in the neighboring block to filter relative to the block boundary based on the second filter decision value.

The embodiments achieve asymmetric deblocking decisions that control deblocking filtering to be adaptive to the structure on each side of a block boundary. The asymmetric decisions means that the amount of filtering applied to one side of the block boundary can differ from the amount of filtering applied to the other side of the block boundary, thus

providing additional adaptation to the local structure. This improves the objective and subjective video quality.

BRIEF DESCRIPTION OF THE DRAWINGS

The invention, together with further objects and advantages thereof, may best be understood by making reference to the following description taken together with the accompanying drawings, in which:

FIG. **1** is a flow diagram of a method for filtering control according to an embodiment;

FIGS. **2**A and **2**B illustrate two embodiments of neighboring blocks and a block boundary over which deblocking filtering can be applied;

FIG. **3** is a flow diagram illustrating additional, optional steps of the method in FIG. **1** according to an embodiment;

FIG. **4** is a flow diagram illustrating an embodiment of the determining steps in FIG. **1**;

FIG. **5** is a flow diagram illustrating additional, optional steps of the method in FIG. **1** according to another embodiment;

FIG. **6** is a flow diagram illustrating additional, optional steps of the method in FIG. **1** and an embodiment of the determining steps in FIG. **1**;

FIG. **7** is a flow diagram illustrating an additional, optional step of the method in FIG. **1** according to an embodiment;

FIG. **8** is a schematic block diagram of an embodiment of a filtering control device;

FIG. **9** is a schematic block diagram of another embodiment of a filtering control device;

FIG. **10** is a schematic block diagram of a further embodiment of a filtering control device;

FIG. **11** is a schematic block diagram of yet another embodiment of a filtering control device;

FIG. **12** is a schematic block diagram of a software implementation of a filtering control device in a computer according to an embodiment;

FIG. **13** is a schematic block diagram of an encoder according to an embodiment;

FIG. **14** is a schematic block diagram of a decoder according to an embodiment;

FIG. **15** is a schematic block diagram of a user equipment according to an embodiment;

FIG. **16** is a schematic block diagram of a user equipment according to another embodiment; and

FIG. **17** is a schematic overview of a portion of a communication network comprising a network device according to an embodiment.

DETAILED DESCRIPTION

Throughout the drawings, the same reference numbers are used for similar or corresponding elements.

The embodiments generally relate to filtering control and controlling deblocking filtering over block boundaries in a video frame. The filtering control of the embodiments provides asymmetric deblocking decisions with regard to block boundaries by making independent filtering decisions for the blocks of pixels separated by a block boundary. This means that the deblocking filtering can handle neighboring blocks having different levels of local structures to thereby adapt the particular deblocking filtering at each block based on its local structures.

As is well-known in the art, a video frame is divided into non-overlapping blocks of pixels that are encoded and decoded according to the various available intra and inter coding modes. Generally, a video frame is divided into non-overlapping macroblocks of 16×16 pixels. Such a macroblock can in turn be divided into smaller blocks of different sizes, such as 4×4 or 8×8 pixels. However, also rectangular blocks are possible according to the embodiments, such as, 4×8, 8×4, 8×16 or 16×8. The embodiments can be applied to any such block of pixels, including macroblocks or even larger blocks of pixels.

In the emerging High Efficiency Video Coding (HEVC) standard, coding units (CU), prediction units (PU) and transform units (TU) are used. The prediction units are defined inside a coding unit and contain the intra or inter prediction modes. Transform units are defined inside a coding unit and the largest transform size is 32×32 pixels and the smallest size is 4×4 pixels. The CU size is currently varying from 64×64 pixels (largest) to 8×8 pixels (smallest). In this way, the largest CU can be split into smaller CUs with the "level of granularity" depending on the local characteristics of the frame. That means that the largest CU may be split into smaller CUs of different sizes. The embodiments can also be used in connection with such coding units, which are regarded as being encompassed by the expression "block of pixels" as used herein.

Each pixel in the block has a respective pixel value. Video frames generally have color values assigned to the pixels, where the color values are represented in a defined color formats. One of the common color formats uses one luminance component and two chrominance components for each pixel, although other formats exist, such as using red, green and blue components for each pixel.

Traditionally, luminance component filtering and chrominance component filtering are done separately, possibly employing different filtering decisions and different deblocking filters. It is, though, possible that the luminance filtering decisions are used in chroma filtering, like in H.264. The embodiments can be applied to filtering control for the luminance component, the chrominance component or both the luminance component and the chrominance component. In a particular embodiment, the embodiments are applied to control luminance or luma filtering. Filtering decisions, or parts of filtering decisions for one component, such as luma, can be then used when making the filtering decisions for other components, such as chroma.

Deblocking filtering is conducted over a boundary, edge or border between neighboring blocks. As a consequence, such boundaries can be vertical boundaries **1**, see FIG. **2**A, between two neighboring blocks **10**, **20** present side by side in the video frame. Alternatively, the boundaries are horizontal boundaries **1**, see FIG. **2**B, between two neighboring block **10**, **20**, where one block **10** is positioned above the other block **20** in the video frame. In a particular embodiment, vertical boundaries are filtered first starting from the left-most boundary and proceeding through the boundaries towards the right-hand side in their geometrical order. Then, horizontal boundaries are filtered starting with the boundary on the top and proceeding through the boundaries towards the bottom in their geometrical order. The embodiments are, however, not limited to this particular filtering order and can actually be applied to any predefined filtering order. In a particular embodiment, the boundaries at the edge of the video frame are preferably not filtered and thereby excluded from the deblocking filtering.

FIG. **1** is a flow diagram of a method for filtering control applicable to a block of multiple pixels in a video frame according to an embodiment. The method of FIG. **1** generally starts in step S**1** where a first filter decision value is calculated for the block based at least on $|p2_t-2p1_t+p0_t|$,

wherein $p0_i$ denotes a pixel value of a pixel **11** closest to, in a first line of pixels **11**, **13**, **15**, **17** in the block **10**, a block boundary **1** to a neighboring block **20** of multiple pixels **21**, **23**, **25**, **27** in the video frame. $p1_i$ denotes a pixel value of a pixel **13** next closest to, in the first line **12** of pixels **11**, **13**, **15**, **17**, the block boundary **1** and $p2_i$ denotes a pixel value of a pixel **15** second next closest to, in the first line **12** of pixels **11**, **13**, **15**, **17**, the block boundary **10**.

Step S**2** correspondingly calculates a second filter decision value for the block based at least on $|q2_i-2q1_i+q0_i|$, wherein q0, denotes a pixel value of a pixel **21** in the neighboring block **20** closest to, in a corresponding first line **22** of pixels **21**, **23**, **25**, **27** in the neighboring block **20**, the block boundary **1**, $q1_i$ denotes a pixel value of a pixel **23** of the neighboring block **20** next closest to, in the corresponding first line **22** of pixels **21**, **23**, **25**, **27**, the block boundary **1** and $q2_i$ denotes a pixel value of a pixel **25** in the neighboring block **20** second next closest to, in the corresponding first line **22** of pixels **21**, **23**, **25**, **27**, the block boundary **1**.

The first line **12** of pixels **11**, **13**, **15**, **17** in the block **10** and the corresponding first line **22** of pixels **21**, **23**, **25**, **27** in the neighboring block **20** belong to the same horizontal line of pixels, i.e. row of pixels, extending over a vertical boundary **1**, see FIG. **2**A, or belong to the same vertical line of pixels, i.e. column of pixels, extending over a horizontal boundary **1**, see FIG. **2**B. Hence, the first line **12** of pixels **11**, **13**, **15**, **17** and the corresponding first line **22** of pixels **21**, **23**, **25**, **27** are perpendicular to the block boundary **1** between the block **10** and the neighboring block **20**. Furthermore, the first line **12** of pixels **11**, **13**, **15**, **17** in the block **10** and the corresponding first line **22** of pixels **21**, **23**, **25**, **27** in the neighboring block **20** have the same line number. For instance, if the block **10** and the neighboring block **20** each comprises N, such as eight, rows or columns of pixels, having row or column numbers i=0 . . . N−1 then the first line **10** of pixels **11**, **13**, **15**, **17** has line number i in the block **10** and the corresponding first line **20** of pixels **21**, **23**, **25**, **27** also has line number i but in the neighboring block **20**. Thus, first line **12** of pixels **11**, **13**, **15**, **17** in the block and the corresponding first line **22** of pixels **21**, **23**, **25**, **27** in the neighboring block **20** are opposing lines with regard to the block boundary **1**.

According to the embodiments, "line of pixels" and "corresponding line of pixels" are employed to denote a "row of pixels" and a "corresponding row of pixels" in the case of a vertical block boundary as in FIG. **2**A and denote a "column of pixels" and a "corresponding column of pixels" in the case of a horizontal block boundary as in FIG. **2**B.

The first line **12** of pixels **11**, **13**, **15**, **17** and the corresponding first line **22** of pixels **21**, **23**, **25**, **27** could be predefined lines in the block **10** and the neighboring block **20**, respectively. Thus, the first line **12** of pixels **11**, **13**, **15**, **17** and the corresponding line **22** of pixels **21**, **23**, **25**, **27** have a predefined and fixed line number i with regard to each block boundary **1** for which a filtering control is applied. Alternatively, the first line **12** of pixels **11**, **13**, **15**, **17** and the corresponding first line **22** of pixels **21**, **23**, **25**, **27** could represent a current line and a current corresponding line, respectively, which is further discussed herein.

The calculation of the first filter decision value in step S**1** and the calculation of the second filter decision value in step S**2** can be performed serially in any order, i.e. step S**1** preceding step S**2** or step S**2** preceding step S**1**, or at least partly in parallel. The results of these two steps S**1**, S**2** is, thus, a first filter decision value that is calculated based on pixel values in the block **10** and a second filter decision value that is calculated based on pixel values in the neighboring block **20** on the other side of the block boundary **1** relative to the block **10**. More preferably, the calculation of the first decision value is performed only based on pixel values in the block **10** and therefore not based on any pixel values in the neighboring block **20**. Correspondingly, the second filter decision value is preferably calculated based only on pixel values in the neighboring block **20** and not based on any pixel values in the block **10**.

The first filter decision value calculated in step S**1** is then used in step S**3** to determine how many pixels in a line **12** of pixels **11**, **13**, **15**, **17** in the block **10** to filter relative to the block boundary **1**. The second filter decision value is correspondingly used in step S**4** to determine how many pixels in a corresponding line **22** of pixels **21**, **23**, **25**, **27** in the neighboring block **20** to filter relative to the block boundary **1**. Thus, separate filter decision values are calculated for each side or part of a row or column of pixels extending over the block boundary **1** and a respective filter decision is taken for each side or part based on the particular filter decision value calculated for that side or part.

This should be compared to the prior art where a single or a set of filter decision values is calculated for a line of pixels and the corresponding line of pixels and where this filter decision value or set of filter decision values is used to decide how many pixels to filter on both sides of the block boundary. Thus, in the prior art the same number of pixels is always filtered for the corresponding line of pixels in the neighboring block as is done for the matching line of pixels in the block.

The present embodiments instead enable an asymmetric filtering control and deblocking filtering by making a separate filter decision for the line **12** of pixels **11**, **13**, **15**, **17** in the block **10** and another, different filter decision for the corresponding line **22** of pixels **21**, **23**, **25**, **27** in the neighboring block **20**. This means that based on the particular first and second filter decision values different or the same number of pixels in the line **12** of pixels **11**, **13**, **15**, **17** could be selected for deblocking filtering and modification as the number of pixels in the corresponding line **22** of pixels **21**, **23**, **25**, **27** that are selected for deblocking filtering and modification.

Generally, herein pX_y denotes the pixel value of pixel number X relative to the block boundary **1** in a line of pixels having line number y in the block **10**. Correspondingly, qX_y denotes the pixel value of pixel number X relative to block boundary **1** in a corresponding line of pixels having line number y in the neighboring block **20**.

Steps S**3** and S**4** can be performed serially in any order or indeed at least partly in parallel.

In a first embodiment, steps S**1** and S**2** could be performed once for a given block boundary **1** between the block **10** and the neighboring block **20** to thereby calculate a first filter decision value and a second filter decision value that applies to all lines **12** of pixels **11**, **13**, **15**, **17** in the block **10** and to all corresponding lines **22** of pixels **21**, **23**, **25**, **27** in the neighboring block **20**, respectively. In such approach the same first number of pixels are preferably filtered and modified in each line **12** of pixels **11**, **13**, **15**, **17** in the block **10** with regard to the block boundary **1**, where this first number is determined based on the first filter decision value calculated in step S**1**. Correspondingly, the same second number of pixels are preferably filtered and modified in each corresponding line **22** of pixels **21**, **23**, **25**, **27** in the neighboring block **20** with regard to the block boundary **1**,

where this second number is determined based on the second filter decision value calculated in step S2.

Alternatively, in a second embodiment the first filter decision value and the second filter decision value applies to a subset of the lines **12** of pixels **11**, **13**, **15**, **17** in the block **10** and to a corresponding subset of the corresponding lines **22** of pixels **21**, **23**, **25**, **27** in the neighboring block **20**. For instance, a pair of filter decision values could be used for the first four lines **12** of pixels **11**, **13**, **15**, **17** in the block and the first four corresponding lines **22** of pixels **21**, **23**, **25**, **27** in the neighboring block **20** and with another pair of filter decision values used for the remaining four lines **12** of pixels **11**, **13**, **15**, **17** in the block and the remaining four corresponding lines **22** of pixels **21**, **23**, **25**, **27** in the neighboring block **20**.

In a third embodiment the calculation in step S1 is performed for each line **12** of pixels **11**, **13**, **15**, **17** in the block **10** and a separate determination in step S3 is then performed for each such line **12** of pixels **11**, **13**, **15**, **17**. In such a case, the calculation in step S2 is correspondingly performed for each corresponding line **22** of pixels **21**, **23**, **25**, **27** in the neighboring block **20** and a separate determination in step S4 is performed for each such corresponding line **22** of pixels **21**, **23**, **25**, **27**.

Thus, in the third embodiment step S3 comprises determining how many pixels in the first line **12** of pixels **11**, **13**, **15**, **17** in the block **10** to filter relative to the block boundary **1** based on the first filter decision value calculated in step S1. Step S4 comprises determining how many pixels in the corresponding first line **22** of pixels **21**, **23**, **25**, **27** in the neighboring block **20** to filter relative to the block boundary **1** based on the second filter decision value calculated in step S2.

The following part describes how the third embodiment is applied separately for each line (row or column) crossing the block boundary **1**. In this example the first filter decision value is defined as $d_{pi}=|p2_i-2p1_i+p0_i|$ and the second filter decision value is defined as $d_{qi}=|q2_i-2q1_i+q0_i|$. The method then comprises:

Calculate d_{pi}, calculate d_{qi} for each line i crossing the block boundary.

if $d_{pi}<thr1$

do normal filtering of line i of current block **10**, e.g. filter and modify two pixels from the block border or boundary;

else, i.e. if $d_{pi}\geq thr1$

do not filter the second pixel from the block border or boundary of line i of the current block **10** or do not filter any pixels at all on line i of the current block **10**;

if $d_{qi}<thr2$

do normal filtering of line i of neighboring block **20**, e.g. filter and modify two pixels from the block border or boundary **1**;

else, i.e. if $d_{qi}\geq thr2$

do not filter the second pixel from the block border or boundary **1** of line i of the neighboring block **20** or do not filter any pixels at all on line i of the neighboring block **20**.

As is illustrated by the example above, the third embodiment of the method in FIG. **1** can calculate separate first and second filter decision values and therefore make separate determinations of how many pixels to filter for each row or column in the block **10** and the neighboring block **20** relative to the block boundary **1**. Thus, in this third embodiment the first and second filter decision values are line-specific filter decision values, i.e. calculated for each line **12** of pixels **11**, **13**, **15**, **17** in the block **10** and for each corresponding line **22** of pixels **21**, **23**, **25**, **27** in the neighboring block **20**.

In the first embodiment, block-specific filter decision values are used. Thus, in such a case a single first filter decision value could be calculated for the block **10** relative to the block boundary **1** and apply to all lines **12** of pixels **11**, **13**, **15**, **17** in the block **10** with regard to the particular block boundary **1**. Correspondingly a single second filter decision value is calculated for the neighboring block **20** relative to the block boundary **1** and applies to all corresponding lines **22** of pixels **21**, **23**, **25**, **27** in the neighboring block **20** with regard to the particular block boundary **1**.

A first example of this first embodiment involves calculating a first filter decision value as $|p2_2-2p1_2+p0_2|+|p2_5-2p1_5+p0_5|$, wherein $p0_2$ denotes the pixel value of the pixel closest to, in the first line of pixels, the block boundary **1**, $p1_2$ denotes the pixel value of the pixel next closest to, in the first line of pixels, the block boundary **1**, $p2_2$ denotes the pixel value of the pixel second next closest to, in the first line of pixels, the block boundary **1**, $p0_5$ denotes a pixel value of a pixel closest to, in a second line of pixels in the block **10**, the block boundary **1**, $p1_5$ denotes a pixel value of a pixel next closest to, in the second line of pixels, the block boundary **1** and $p2_5$ denotes a pixel value of a pixel second next closest to, in the second line of pixels, the block boundary **1**.

The second filter decision value is then preferably calculated as $|q2_2-2q1_2+q0_2|+|q2_52q1_5+q0_5|$, wherein $q0_2$ denotes the pixel value of the pixel in the neighboring block **20** closest to, in the corresponding first line of pixels, the block boundary **1**, $q1_2$ denotes the pixel value of the pixel of the neighboring block **20** next closest to, in the corresponding first line of pixels, the block boundary **1**, $q2_2$ denotes the pixel value of the pixel in the neighboring block **20** second next closest to, in the corresponding first line of pixels, the block boundary **1**, $q0_5$ denotes a pixel value of a pixel in the neighboring block **20** closest to, in a corresponding second line of pixels in the neighboring block **20**, the block boundary **1**, $q1_5$ denotes a pixel value of a pixel of the neighboring block **20** next closest to, in the corresponding second line of pixels, the block boundary **1** and $q2_5$ denotes a pixel value of a pixel in the neighboring block **20** second next closest to, in the corresponding second line of pixels, the block boundary **1**.

The first filter decision value is then used for all lines **12** of pixels **11**, **13**, **15**, **17** in the block **10** when determining how many pixels to filter and the second filter decision value is used for all corresponding line **22** of pixels **21**, **23**, **25**, **27** in the neighboring block **20** when determining how many pixels to filter.

In this first example of the first embodiment, the first line of pixels corresponds to line i=2 and the corresponding first line corresponds to corresponding line i=2 and the second line of pixels corresponds to line i=5 and the second corresponding line corresponds to corresponding line i=5. In this case the block **10** preferably comprises eight lines and the neighboring block **20** preferably also comprises eight lines, i.e. i=0-7.

The following part illustrates an implementation example of the first embodiment. In this implementation example the first filter decision value is defined as $d_p=|p2_2-2p1_2+p0_2|+|p2_52-p1_5+p0_5|$ and the second filter decision value is defined as $d_q=|q2_2-2q1_2+q0_2|+|q2_5-2q1_5+q0_5|$.

Calculate d_p, calculate d_q;

if $d_p<thr1$

do normal filtering of current block **10**, e.g. filter and modify two pixels from the block border or boundary **1**;

else, i.e. if $d_p \geq thr1$

do not filter the second pixel from the block border or boundary **1** or do not filter any pixels at all;

if $d_q < thr2$

do normal filtering of neighboring block **20**, e.g. filter and modify two pixels from the block border or boundary **1**;

else, i.e. if $d_q \geq thr2$

do not filter the second pixel from the block border or boundary **1** or do not filter any pixels at all.

In a second example of the first embodiment the first filter decision value is calculated as a block-specific filter decision value based on pixel values in line i=3 and line i=4 instead of line i=2 and line i=5. The corresponding lines i=3 and i=4 in the neighboring block **20** are preferably then used for calculating the second filter decision value. The first filter decision value could then be calculated as $|p2_3-2p1_3+p0_3|+|p2_4-2p1_4+p0_4|$ and the second filter decision value is calculated as $|q2_3-2q1_3+q0_3|+|q2_4-2q1_4+q0_4|$, wherein $p0_3$ denotes the pixel value of the pixel closest to, in the first line of pixels, the block boundary **1**, $p1_3$ denotes the pixel value of the pixel next closest to, in the first line of pixels, the block boundary **1**, $p2_3$ denotes the pixel value of the pixel second next closest to, in the first line of pixels, the block boundary **1**, $p0_4$ denotes a pixel value of a pixel closest to, in a second line of pixels in the block **10**, the block boundary **1**, $p1_4$ denotes a pixel value of a pixel next closest to, in the second line of pixels, the block boundary **1** and $p2_4$ denotes a pixel value of a pixel second next closest to, in the second line of pixels, the block boundary **1** and $q0_3$ denotes the pixel value of the pixel in the neighboring block **20** closest to, in the corresponding first line of pixels, the block boundary **1**, $q1_3$ denotes the pixel value of the pixel of the neighboring block **20** next closest to, in the corresponding first line of pixels, the block boundary **1**, $q2_3$ denotes the pixel value of the pixel in the neighboring block **20** second next closest to, in the corresponding first line of pixels, the block boundary **1**, $q0_4$ denotes a pixel value of a pixel in the neighboring block **20** closest to, in a corresponding second line of pixels in the neighboring block **20**, the block boundary **1**, $q1_4$ denotes a pixel value of a pixel of the neighboring block **20** next closest to, in the corresponding second line of pixels, the block boundary **1** and $q2_4$ denotes a pixel value of a pixel in the neighboring block **20** second next closest to, in the corresponding second line of pixels, the block boundary **1**.

In the second embodiment a first filter decision value and a second filter decision value are calculated for a group of four lines of pixels and four corresponding lines of pixels. This second embodiment can be suitable if the block and the neighboring block each have a size of 4×4 pixels. In addition, the second embodiment could also be used for larger blocks of pixels, such as 8×8 pixels. In the latter case, a pair of filter decisions is calculated for the first four lines pixels and first four corresponding lines of pixels and another pair of filter decisions is calculated for the remaining four lines of pixels and the remaining four corresponding lines of pixels.

A first example of the second embodiment calculates the first filter decision value as $|p2_0-2p1_0+p0_0|+|p2_3-2p1_3+p0_3|$ and the second filter decision value as $|q2_0-2q1_0+q0_0|+|q2_3-2q1_3+q0_3|$. In such a case, the line of pixels and the corresponding line of pixels could run from line number i=0 to line number i=3. For larger blocks of pixels, such as i=0-7 as shown in FIGS. **2**A and **2**B, the first pair of a first filter decision value and a second filter decision value is calculated as $|p2_0-2p1_0+p0_0|+|p2_3-2p1_3+p0_3|$ and $|q2_0-2q1_0+q0_0|+|q2_3-2q1_3+q0_3|$. This first pair of filter decision values is applicable to the first four lines of pixels and first four corresponding line of pixels, i.e. i=0-3. The second pair of a first filter decision value and a second filter decision value is then calculated as $|p2_4-2p1_4+p0_4|+|p2_7-2p1_7+p0_7|$ and $|q2_4-2q1_4+q0_4+q0_4|+|q2_7-2q1_7+q0_7|$. The second pair of filter decision values is then applicable to the four last line of pixels and the four last corresponding line of pixels, i.e. i=4-7.

A second example of the second embodiment calculates the first filter decision value as $|p2_1-2p1_1+p0_1|+|p2_2-2p1_2+p0_2|$ and the second filter decision value as $|q2_1-2q1_1+q0_1|+|q2_2-2q1_2+q0_2|$. In such a case, the line of pixels and the corresponding line of pixels could run from line number i=0 to line number i=3. For larger blocks of pixels, such as i=0-7 as shown in FIGS. **2**A and **2**B, the first pair of a first filter decision value and a second filter decision value is calculated as $|p2_1-2p1_1+p0_1|+|p2_2-2p1_2+p0_2|$ and $|q2_1-2q1_1+q0_11|+|q2_2-2q1_2+q0_2|$. This first pair of filter decision values is applicable to the first four lines of pixels and first four corresponding line of pixels, i.e. i=0-3. The second pair of a first filter decision value and a second filter decision value is then calculated as $|p2_5-2p1_5+p0_5|+|p2_6-2p1_6+p0_6|$ and $|q2_5-2q1_5+q0_5|+|q2_6-2q1_6+q0_6|$. The second pair of filter decision values is then applicable to the four last line of pixels and the four last corresponding line of pixels, i.e. i=4-7.

This concept of the second embodiment can be extended to the case where the first filter decision value is calculated based on the pixel values of pixels present in a subset of the lines of pixels in the block and the second filter decision value is calculated based on the pixel values of pixels present in a subset of the corresponding lines of pixels in the neighboring block. Thus, in this general concept of the second embodiment the first filter decision value could be calculated as $|p2_i-2p1_i+p0_i|+|p2_j-2p1_j+p0_j|$, wherein i, j represent different line numbers in the interval 0 to N−1, with N denoting the total number of lines of pixels in the block and the neighboring block and $i \neq j$. The second filter decision value is then preferably calculated as $|q2_i-2q1_i+q0_i|+|q2_j-2q1_j+q0_j|$. This concept can of course be extended with the subset containing more than two of the lines of pixels or the corresponding lines of pixels.

In a related example of the first or third embodiment, the first filter decision value is calculated as $\overline{\omega}_i|p2_i-2p1_i+p0_i|+\overline{\omega}_j|p2_j-2p1_j+p0_j|$ and the second filter decision value is calculated as $\overline{\omega}_i|q2_i-2q1_i+q0_i|+\overline{\omega}_j|q2_j-2q1_j+q0_j|$. $\overline{\omega}_i$, $\overline{\omega}_j$ represent different line-specific weights. This concept can also be extended to the case with more than two lines of pixels and two corresponding lines of pixels. In a particular example, a line of pixels or corresponding line of pixels that is closer to the middle of the block or the neighboring block could then be assigned a comparatively higher weight as compared to a line or pixels or corresponding line of pixels that is closer to one of the edges of the block or the neighboring block.

In a fourth embodiment, a combination of block-specific and line-specific filter decision values is used to determine how many pixels to filter for the lines of pixels in the block and the corresponding lines of pixels in the neighboring block. FIG. **3** schematically illustrates such an embodiment. The method starts in step S**10** where a third filter decision value is calculated as $|p2_2-2p1_2+p0_2|+|p2_5-2p1_5+p0_5|$, wherein $p0_2$ denotes the pixel value of the pixel closest to, in a second line of pixels in the block **10**, the block boundary

1, $p1_2$ denotes the pixel value of the pixel next closest to, in the second line of pixels, the block boundary **1**, $p2_2$ denotes the pixel value of the pixel second next closest to, in the second line of pixels, the block boundary **1**, $p0_5$ denotes a pixel value of a pixel closest to, in a third line of pixels in the block **10**, the block boundary **1**, $p1_5$ denotes a pixel value of a pixel next closest to, in the third line of pixels, the block boundary **1** and $p2_5$ denotes a pixel value of a pixel second next closest to, in the third line of pixels, the block boundary **1**. The second line of pixels preferably corresponds to line number **2** in the block **10** and the third line of pixel preferably corresponds to line number **5** in the block **10**, see FIGS. **2**A and **2**B.

The next step S**11** calculates a fourth filter decision value as $|q2_2-2q1_2+q0_2|+|q2_5-2q1_5+q0_5$, wherein $q0_2$ denotes the pixel value of the pixel in the neighboring block **20** closest to, in a corresponding second line of pixels in the neighboring block **20**, the block boundary **1**, $q1_2$ denotes the pixel value of the pixel of the neighboring block **20** next closest to, in the corresponding second line of pixels, the block boundary **1**, $q2_2$ denotes the pixel value of the pixel in the neighboring block **20** second next closest to, in the corresponding second line of pixels, the block boundary **1**, $q0_5$ denotes a pixel value of a pixel in the neighboring block **20** closest to, in a corresponding third line of pixels in the neighboring block **20**, the block boundary **1**, $q1_5$ denotes a pixel value of a pixel of the neighboring block **20** next closest to, in the corresponding third line of pixels, the block boundary **20** and $q2_5$ denotes a pixel value of a pixel in the neighboring block **20** second next closest to, in the corresponding third line of pixels, the block boundary **1**. The second corresponding line of pixels preferably corresponds to line number **2** in the neighboring block **20** and the third corresponding line of pixel preferably corresponds to line number **5** in the neighboring block **20**, see FIGS. **2**A and **2**B.

Steps S**10** and S**11** can be performed serially in any order or at least partly in parallel.

The next step S**12** compares the third filter decision value calculated in step S**10** with a third threshold value (T_3). If the third filter decision value is below the third threshold value the method continues to steps S**1** and then S**3** of FIG. **1**. Thus, in such a case a respective line-specific or first filter decision value is calculated for each line i in the block **10**, where i preferably is from 0 to 7. This first filter decision value is then calculated as $|p2_i-2p1_i+p0_i|$ in step S**1** of FIG. **1**. Step S**3** of FIG. **1** determines how many pixels in the line i of pixels in the block **10** to filter relative to the block boundary **1** based on the first filter decision value calculated for the line i of pixels in step S**1**. This procedure is performed for each line of pixels in the block **10**. Thus, with a block **10** as illustrated in FIG. **2**A or **2**B steps S**1** and S**3** will be performed eight times. The method then continues to step S**13** of FIG. **3**. Correspondingly, if the third filter decision value is not below the first threshold value in step S**12** the method continues to step S**13**.

Step S**13** compares the fourth filter decision value calculated in step S**11** with a fourth threshold value (T_4). If the fourth filter decision value is below the fourth threshold the method continues to steps S**2** and S**4** of FIG. **1**. A respective line-specific or second filter decision value is calculated for each corresponding line i in the neighboring block **20** as $|q2_i-2q1_i+q0_i|$ step S**2** of FIG. **1**. Step S**4** of FIG. **3** determines how many pixels in the corresponding line i of pixels in the neighboring block **20** to filter relative to the block boundary **1** based on the second filter decision value calculated for the corresponding line i of pixels in step S**2**. This procedure is performed for each corresponding line of pixels in the neighboring block **20**. The method then ends. Correspondingly, if the fourth filter decision value is not below the second threshold value in step S**13** the method ends.

The loop formed by steps S**12**, S**1** and S**3** can be performed sequentially in any order relative to the loop formed by steps S**13**, S**2** and S**4** or at least partly in parallel.

In an example of this fourth embodiment a combination of block-based and line-based asymmetric filter decisions is used. In this example the third filter decision value is calculated as $d_p=|p2_2-2p1_2+p0_2|+|p2_5-2p1_5+p0_5|$ and the fourth filter decision value is calculated as $d_q=|q2_2-2q1_2+q0_2|+|q2_5-2q1_5+q0_5|$. The line-specific filter decision values, i.e. the first and second filter decision values, are calculated as $d_{pi}=|p2_i-2p1_i+p0_i|$ and $d_{qi}=|q2_i-2q1_i+q0_i|$ for line and corresponding line number i, respectively.

```
Calculate d_p, calculate d_q;
if d_p<thr1
  for each line i
    calculate d_pi for line i
    if d_pi<thr1
      do normal filtering of line i in current block 10,
        e.g. two pixels from the block border or boundary 1;
    else, i.e. if d_pi≥thr1
      do not filter the second pixel from the block border
        or boundary 1 of line i of current block 10 or do
        not filter any pixels at all on line i of current
        block 10;
else, i.e. if d_p≥thr1
  do not filter the second pixel from the block border or
    boundary 1 or do not filter any pixels at all;
if d_q<thr1
  for each line i
    calculate d_qi for line i
    if d_qi<thr2
      do normal filtering of line i in neighboring block
        20, e.g. two pixels from the block border or
        boundary 1;
    else, i.e. if d_qi≥thr2
      do not filter the second pixel from the block border
        or boundary 1 of line i of neighboring block 20
        or do not filter any pixels at all on line i of
        neighboring block 20;
else, i.e. if d_q≥thr2
  do not filter the second pixel from the block border or
    boundary 1 or do not filter any pixels at all.
```

In the above disclosed example the same threshold value has been used when comparing the third filter decision value and the first filter decision values, i.e. thr1, and the same threshold value has been used when comparing the fourth filter decision value and the second filter decision values, i.e. thr2. In an alternative approach, a third threshold value is used for the third filter decision value, a first threshold value is used for the first filter decision values, a fourth threshold value is used for the fourth filter decision value and a second threshold value is used for the second threshold values. In a particular embodiment, the third and fourth threshold values are equal and the first and second threshold values are equal.

FIG. **4** is a flow diagram illustrating a particular embodiment of the determining steps S**3** and S**4** of FIG. **1**. The method continues from step S**2** in FIG. **1**. A next step S**20** compares the first filter decision value (d_p) calculated in step S**1** in FIG. **1** to a first threshold value (T_1). If the first filter decision value is below the first threshold value the method continues from step S**20** to step S**21**. Step S**21** determines to filter two pixels in the line **12** of pixels **11**, **13**, **15**, **17** in the block **10** relative to the block boundary **1**. These two pixels

are preferably the pixel **11** closest to the block boundary **1** and the pixel **13** next closest to the block boundary **1** in the line **12** of pixels **11**, **13**, **15**, **17**. However, if the first filter decision value is not below the first threshold in step S**20** the method instead continues to step S**22**. A first embodiment of step S**22** determines to filter one pixel in the line **12** of pixels **11**, **13**, **15**, **17** in the block **10** relative to the block boundary **1**. This pixel **11** is preferably the pixel **11** closest to the block boundary **1** in the line of pixels **11**, **13**, **15**, **17**. A second embodiment of step S**22** determines to filter no pixels in the line of pixels **11**, **13**, **15**, **17** in the block **10** relative to the block boundary **1**.

Steps S**23** to S**25** perform the corresponding determination for the corresponding line **22** of pixels **21**, **23**, **25**, **27** in the neighboring block **20**. Thus, step S**23** compares the second filter decision value (d_q) calculated in step S**2** in FIG. **1** with a second threshold value (T_2). If the second filter decision value is below the second threshold value the method continues to step S**24**. Step S**24** determines to filter two pixels in the corresponding line **22** of pixels **21**, **23**, **25**, **27** in the neighboring block **20** relative to the block boundary **1**. These two pixels **21**, **23** are preferably the pixel **21** closest to the block boundary **1** and the pixel **23** next closest to the block boundary **1** in the corresponding line **22** of pixels **21**, **23**, **25**, **27**. If the second filter decision value is not below the second threshold the method instead continues to step S**25** from step S**23**. A first embodiment of step S**25** determines to filter one pixel in the corresponding line **22** of pixels **21**, **23**, **25**, **27** in the neighboring block **20** relative to the block boundary **1**. This pixel **21** is preferably the pixel **21** closest to the block boundary **1** in the corresponding line **22** of pixels **21**, **23**, **25**, **27**. A second embodiment of step S**25** determines to filter no pixels in the corresponding line **22** of pixels **21**, **23**, **25**, **27** in the neighboring block relative to the block boundary **1**.

Steps S**20**, S**21** and S**22** can be performed prior to, following or at least in parallel to steps S**23**, S**24** and S**25**.

This concept can be extended by using more than one threshold value per filter decision value. For instance, if $d_p<T_1$ two pixels are filtered in the line **12** of pixels **11**, **13**, **15**, **17**, if $T_1 \geq d_p < T_1'$ one pixel is filtered in the line **12** of pixels **11**, **13**, **15**, **17** and if $d_p \geq T_1'$ no pixels are filtered in the line **12** of pixels **11**, **13**, **15**, **17**. In this case $T_1<T_1'$. Correspondingly, if $d_q<T_2$ two pixels are filtered in the corresponding line **22** of pixels **21**, **23**, **25**, **27**, if $T_2 \leq d_q < T_2'$ one pixel is filtered in the corresponding line **22** of pixels **21**, **23**, **25**, **27** and if $d_q \geq T_2'$ no pixels are filtered in the corresponding line **22** of pixels **21**, **23**, **25**, **27**. In this case $T_2<T_2'$.

Thus, in a general aspect the closer the first or second filter decision value is to zero the more filtering is to be applied to the particular line or corresponding line of pixels by filtering and possibly modifying more pixels in the line or corresponding line of pixels as compared to a larger first or second filter decision value. This means that a zero or low first or second filter decision value implies no or few structures but rather a fairly uniform area in the video frame. Correspondingly, a high first or second filter decision value generally reflects local structures in the area in the video frame, which local structures should not be repressed or filtered away.

This embodiment decreases the computational complexity in connection with deblocking filtering since the filtering of the second pixel from the block border may happen less frequently as compared to the prior art HEVC solution.

The threshold values discussed in the foregoing and used to compare the different filter decision values are preferably dependent on the quantization parameter (QP) assigned to the block or to the neighboring block. FIG. **5** schematically illustrates such an approach. The method starts in step S**30** where the first threshold value, to which the first filter decision value is compared (see step S**20** in FIG. **4**), is determined based on a quantization parameter associated with the block **10**. Correspondingly, step S**31** determines the second threshold value, to which the second threshold value is compared (see step S**23** in FIG. **4**), based on a quantization parameter associated with the neighboring block **20** and/or a quantization parameter associated with the block **10**.

For instance, T_1 and T_2 are determined based on the parameter β, which is determined from the QP value of the block **10** or the neighboring block **20**. In a particular embodiment, the parameter β is read from a table based on the QP value, see Table 1 below.

TABLE 1

β and QP values																			
	QP																		
	0	1	2	3	4	5	6	7	8	9	10	11	12	13	14	15	16	17	18
β	0	0	0	0	0	0	0	0	0	0	0	0	0	0	0	0	6	7	8
	QP																		
	19	20	21	22	23	24	25	26	27	28	29	30	31	32	33	34	35	36	37
β	9	10	11	12	13	14	15	16	17	18	20	22	24	26	28	30	32	34	36
	QP																		
	38	39	40	41	42	43	44	45	46	47	48	49	50	51	52	53	54	55	
β	38	40	42	44	46	48	50	52	54	56	58	60	62	64	64	64	64	64	

In particular embodiments $T_1=T_2=\beta/6$ or $T_1=T_2=(\beta+\beta>>3$. As another variant of the embodiment, the thresholds can be read from separate tables, i.e. T_1=function(QP), T_2=function(QP). Also the above mentioned third and fourth threshold values are preferably determined based on the quantization parameter associated with the block and the neighboring block, respectively.

FIG. **6** is a flow diagram illustrating how the filtering control of the embodiments can be used in connection with

a filtering process. The method starts in step S**40** where a first offset or delta value **Δ0** is calculated based on

$$\frac{9\times(q0_j-p0_j)-3\times(q1_j-p1_j)}{16},$$

wherein $p0_j$ denotes a pixel value of a pixel **11** closest to, in a line **12** of pixels **11**, **13**, **15**, **17**, the block boundary **1**, $p1_1$ denotes a pixel value of a pixel **13** next closest to, in the line **12** of pixels **11**, **13**, **15**, **1**), the block boundary **1**, $q0_j$ denotes a pixel value of a pixel **21** in the neighboring block **20** closest to, in the corresponding line **22** of pixels **21**, **23**, **25**, **27**, the block boundary **1** and $q1_i$ denotes a pixel value of a pixel **23** of the neighboring block **20** next closest to, in the corresponding line **22** of pixels **21**, **23**, **25**, **27**, the block boundary **1**.

This first offset is used in step S**41** to modify the pixel value of the pixel **11** closest to the block boundary **1** in the line **12** of pixels **11**, **13**, **15**, **17** by adding the first offset to the pixel value, i.e. $p0'_j=p0_j+\Delta$. Step S**41** also modifies the pixel value of the pixel **21** closest to the block boundary **1** in the corresponding line **22** of pixels **21**, **23**, **25**, **27** by subtracting the first offset from the pixel value, i.e. $q0'_j=q0_j-\Delta$. The method then continues to steps S**1** and S**2** of FIG. **1** where the first (d_p) and second (d_q) filter decision values are calculated. A next step S**42** compares the first filter decision value to a first threshold value (T_1). This step S**42** corresponds to step S**20** in FIG. **4**. If the first filter decision value is below the threshold the method continues to step S**43**.

Step S**43** calculates a second offset or delta value Δ_p based on

$$\frac{p0_j+p2_j-2p1_j+2\Delta}{4},$$

wherein $p2_j$ denotes a pixel value of a pixel **15** second next closest to, in the line **12** of pixels **11**, **13**, **15**, **17**, the block boundary **1**. The second offset is then used in step S**44** to modify the pixel value of the pixel **13** next closest to the block boundary **1** in the line **12** of pixels **11**, **13**, **15**, **17** by adding the second offset to the pixel value, i.e. $p1'_j=p1_j+\Delta_p$.

The method then continues to step S**45**. The method also continues in FIG. **6** from step S**42** to step S**45** if the first threshold value is not below the first threshold.

Step S**45** compares the second filter decision value with a second threshold (T_2). This step S**45** corresponds to step S**23** of FIG. **4**. If the second filter decision value is below the second threshold the method continues to step S**46**. Step S**46** calculates a third offset Δ_q based on

$$\frac{q0_j+q2_j-2q1_j-2\Delta}{4},$$

wherein $q2_j$ denotes a pixel value of a pixel **25** in the neighboring block **20** second next closest to, in the corresponding line **22** of pixels **21**, **23**, **25**, **27**, the block boundary **1**. The third offset is used in step S**47** to modify the pixel value of the pixel **23** next closest to the block boundary **1** in the corresponding line **22** of pixels **21**, **23**, **25**, **27** by adding the third offset to the pixel value, i.e. $q1'_j=q1_j+\Delta_q$.

Steps S**42**, S**43** and S**44** can be performed serially in any order or at least partly in parallel with steps S**45**, S**46** and S**47**.

In above, the first, second and third offsets are calculated based on particular equations of pixel values. This means that the first offset is calculated as a function of

$$\frac{9\times(q0_j-p0_j)-3\times(q1_j-p1_j)}{16},$$

the second offset is calculated as a function of

$$\frac{p0_j+p2_j-2p1_j+2\Delta}{4}$$

and the third offset is calculated as a function of

$$\frac{q0_j+q2_j-2q1_j-2\Delta}{4}.$$

Different such functions are possible and can be used in steps S**40**, S**43** and S**46**. Such functions could then be defined so that the calculations of the offsets are efficiently performed in hardware. In such a case, it is generally preferred not to have any divisions and/or define the functions so that the offsets will be an integer value. In an embodiment, (X+8)>>4 is used as an integer-expression of X/16, where >> denotes a right shift operation. Thus, in a particular embodiment step S**40** calculates the first offset to be based on and preferably equal to $(9\times(q0_j-p0_j)-3\times(q1_j-p1_j)+8>>4$. Corresponding integer representations of the second and third offsets could be $(((p0_j+p2_j+1)>>1)-p1_j+\Delta)>>1$ and $(((q0_j+q2_j+1)>>1)-q1_j-\Delta)>>1$.

In an example the modified pixel values as a result of deblocking are calculated like in the following. In this example, the first filter decision value is defined as $d_p=|p2_2-2p1_2+p0_2|+|p2_5-2p1_5+p0_5|$ and the second filter decision value is calculated as $d_q=|q2_2-2q1_2+q0_2|+|q2_5-2q1_5+q0_5|$.

$$\Delta=\frac{9\times(q0-p0)-3\times(q1-p1)}{16}$$

$$p'_0=p_0+\Delta$$

$$q'_0=q_0-\Delta$$

$$\text{if } d_p<thrP$$

$$\Delta_p=\frac{p0+p2-2p1_j+2\Delta}{4}$$

$$p'_1=p_1+\Delta_p$$

$$\text{if } d_q<thrQ$$

$$\Delta_q=\frac{q0+q2-2q1-2\Delta}{4}$$

$$q'_1=q_1+\Delta_q$$

Exact formulas for computation of the example above in the programming language can look like in the text below. Here, the Clip3 function is clipping of the output values to the range between the two first function arguments.

```
Int xCalcDP(Pel* piSrc, Int iOffset)
{
  return abs (piSrc[-iOffset*3]-2*piSrc[-iOffset*2]+piSrc[-
```

-continued

```
iOffset]);
}
Int xCalcDQ(Pel* piSrc, Int iOffset)
{
  return abs(piSrc[0]−2*piSrc[iOffset]+piSrc[iOffset*2]);
}
Int iDP=xCalcDP(piTmpSrc+iSrcStep*(iIdx*uiPelsInPart+iBlkIdx*
DEBLOCK_SMALLEST_BLOCK+2),iOffset)+xCalcDP(piTmpSrc+
iSrcStep* (iIdx*uiPelsInPart+iBlkIdx*
DEBLOCK_SMALLEST_BLOCK+5),iOffset);
Int iDQ=xCalcDQ(piTmpSrc+iSrcStep*(iIdx*uiPelsInPart+iBlkIdx*
DEBLOCK_SMALLEST_BLOCK+2),iOffset)+xCalcDQ(piTmpSrc+
iSrcStep*(Idx*uiPelsInPart+iBlkIdx*
DEBLOCK_SMALLEST_BLOCK+5),iOffset);
Int iSideThreshold=iBeta/6;
Bool bFilterP=(iDP<iSideThreshold);
Bool bFilterQ=(iDQ<iSideThreshold);
delta=(9*(m4−m3)−3*(m5−m2)+8)>>4;
if (abs(delta)<iThrCut)
{
  Int tc2=tc>>1;
  delta=Clip3(−tc, tc, delta);
  piSrc[−iOffset]=Clip((m3+delta));
  piSrc[0]=Clip((m4−delta));
  if(bFilterP)
  {
    Int delta1=Clip3(−tc2,tc2,((((m1+m3+1)>>1)−m2+delta)>>1));
    piSrc[−iOffset*2]=Clip((m2+delta1));
  }
  if(bFilterQ)
  {
    Int delta2=Clip3(−tc2,tc2,((((m6+m4+1)>>1)−m5−delta)>>1));
    piSrc[iOffset]=Clip((m5+delta2));
  }
}
```

FIG. **7** is a flow diagram illustrating additional optional steps of the method in FIG. **1**. The method continues from step S**2** in FIG. **1**. A next step S**50** compares a sum of the first decision value and the second decision value with a threshold value (T). If the sum is not below the threshold value, the method ends. Thus, in such a case no filtering at all is applied to block **10** and neighboring block **20** with regard to the particular block boundary **1**. The block **10** and the neighboring block **20** then comprises at lot of local structures, which should not be filtered away. However, if the sum is below the threshold value the method continues to steps S**3** and S**4** in FIG. **1**, where the determination of how many pixels to filter is performed based on the first filter decision value (step S**3**) or the second filter decision value (step S**4**).

This embodiment has an advantage that it does not require many additional computations as the values for the first and second filter decisions are also used for deciding whether to filter the block boundary at all.

The embodiments disclosed herein achieve asymmetric deblocking decisions that control deblocking filtering to be adaptive to the structure on each side of a block boundary. The asymmetric decisions means that the amount of filtering applied to one side of the block boundary can differ from the amount of filtering applied to the other side of the block boundary, thus providing additional adaptation to the local structure. This improves the objective and subjective video quality.

FIG. **8** is a schematic block diagram of an embodiment of a filtering control device **100**. The filtering control device **100** comprises a first decision value calculator **110** configured to calculate a first filter decision value for a block **10** in a video frame based at least on $|p2_i-2p1_i+p0_i|$. The filtering control device **100** also comprises a second decision value calculator **120** configured to calculate a second, different filter decision value for the block **10** based on $|q2_i-2q1_i+q0_i|$.

A first pixel determiner **130** or first pixel determining unit or processor is configured to determine how many pixels in a line **12** of pixels **11**, **13**, **15**, **17** in the block **10** to filter relative to a block boundary **1** based on the first filter decision value calculated by the first decision value calculator **110**. A second pixel determiner **140** or second pixel determining unit or processor is provided in the filtering control device **100** to determine how many pixels in a corresponding line **22** of pixel **21**, **23**, **25**, **27** in a neighboring block **20** of the video frame to filter relative to the block boundary based on the second filter decision value calculated by the second decision value calculator **120**.

In an embodiment, the first pixel determiner **130** is configured to determine how many pixels in the first line **12** of pixels **11**, **13**, **15**, **17** in the block **10** to filter relative to the block boundary **1** based on the first filter decision value calculated by the first decision value calculator **110** for the first line **12** of pixels **11**, **13**, **15**, **17**. The second pixel determiner **140** correspondingly determines in this embodiment how many pixels in the corresponding first line **22** of pixels **21**, **23**, **25**, **27** in the neighboring block **20** to filter relative to the block boundary **1** based on the second filter decision value calculated by the second decision value calculator **120** for the corresponding first line **22** of pixels **21**, **23**, **25**, **27**.

In another embodiment, the first decision value calculator **110** is configured to calculate the first filter decision value as $|p2_2-2p1_2+p0_2|+|p2_5-2p1_5+p0_5|$ and the second decision value calculator **120** is configured to calculate the second filter decision value as $|q2_2-2q1_2+q0_2|+|q2_5-2q1_5+q0_5|$.

In yet another embodiment, the first decision value calculator **110** is configured to calculate the first filter decision value of a first pair as $|p2_0-2p1_0+p0_0|+|p2_3-2p1_3+p0_3|$ and the second decision value calculator **120** is configured to calculate the second filter decision value of the first pair as $|q2_0-2q1_0+q0_0|+|q2_3-2q1_3+q0_3|$. The first filter decision value calculator **110** is also configured to calculate the first filter decision value of a second pair as $|p2_4-2p1_4+p0_4+|p2_7-2p1_7+p0_7|$ and the second filter decision value calculator **120** is also configured to calculate the second filter decision value of a the second pair as $|q2_4-2q1_4+q0_4|+|q2_7-2q1_7+q0_7|$.

FIG. **9** is a schematic block diagram of another embodiment of a filtering control device **100**. The filtering control device **100** comprises, in this embodiment and in addition to the first decision value calculator **110**, the second decision value calculator **120**, the first pixel determiner **130** and the second pixel determiner **140**, a third decision value calculator **150**. The third decision value calculator **150** is then configured to calculate a third filter decision value as $|p2_2-2p1_2+p0_2|+|p2_5-2p1_5+p0_5|$. A fourth decision value calculator **160** is also implemented in the filtering control device **100** and configured to calculate a fourth filter decision value as $q2_2-2q1_2+q0_2|+|q2_5-2q1_5+q0_5|$.

In this embodiment, the first filter decision value calculator **110** is configured to calculate the first filter decision value if the third filter decision value calculated by the third decision value calculator **150** is below a third threshold value. If the third decision value is below the third threshold, the first decision value calculator **110** calculates a first threshold value for each line i **12** of pixels **11**, **13**, **15**, **17** in the block **10** as $|p2_i-2p1_i+p0_i|$. The first pixel determiner **130** then determines, if the third filter decision value is below the third threshold value and for each line i **12** of pixels **11**, **13**, **15**, **17** in the block **10**, how many pixels in the line i **12** of pixels **11**, **13**, **15**, **17** in the block **10** to filter relative to the block boundary **1** based on the first filter

decision value calculated by the first decision value calculator **110** for the line i **12** of pixels **11**, **13**, **15**, **17**.

The second decision value calculator **120** is preferably responsive to a comparison between the fourth filter decision value and a fourth threshold value. Thus, if the fourth filter decision value calculated by the fourth decision value calculator **160** is below the fourth threshold the second decision value calculator **120** calculates a second filter decision value as $|q2_i-2q1_i+q0_i$ for each corresponding line i **22** of pixels **21**, **23**, **25**, **27** in the neighboring block **20**. The second pixel determiner **240** is configured to determine, if the fourth filter decision value is below the fourth threshold value and for each corresponding line i **22** of pixels **21**, **23**, **25**, **27** in the neighboring block **20**, how many pixels in the corresponding line i **22** of pixels **21**, **23**, **25**, **27** in the neighboring block **20** to filter relative to the block boundary **1** based on the second filter decision value calculated for the corresponding line i **22** of pixels **21**, **23**, **25**, **27**.

FIG. **10** is a schematic block diagram of a further embodiment of a filtering control device **100**. In addition to the units **110**-**140** of the embodiment illustrated in FIG. **8**, the filtering control device **100** comprises a first comparator **180** configured to compare the first filter decision value calculated by the first decision value calculator **110** to a first threshold value. A second comparator **182** is correspondingly configured to compare the second filter decision value calculated by the second decision value calculator **120** to a second threshold value.

In this embodiment, the first pixel determiner **130** is configured to determine to filter two pixels in the line **12** of pixels **11**, **13**, **15**, **17** in the block **10** relative to the block boundary **1** if the first filter decision value is below the first threshold value as determined by the first comparator **180**. However, if the first filter decision value is not below the first threshold value the first pixel determiner **130** is instead configured to determine to filter one pixel in the line **12** of pixels **11**, **13**, **15**, **17** in the block **10** relative to the block boundary **1**. Alternatively, the first pixel determiner **130** is instead configured to determine to filter no pixels in the line **12** of pixels **11**, **13**, **15**, **17** in the block **10** relative to the block boundary **1**.

The second pixel determiner **140** is configured to determine to filter two pixels in the corresponding line **22** of pixels **21**, **23**, **25**, **27** in the neighboring block **20** relative to the block boundary **1** if the second filter decision value is below the second threshold value as determined by the second comparator **182**. However, if the second filter decision value is not below the second threshold the second pixel determiner **140** is instead configured to determine to filter one pixel in the corresponding line **22** of pixels **21**, **23**, **25**, **27** in the neighboring block **20** relative to the block boundary **1**. Alternatively, the second pixel determiner **140** is instead configured to determine to filter no pixels in the corresponding line **22** of pixels **21**, **23**, **25**, **27** in the neighboring block **20** relative to the block boundary **1**.

In an embodiment the filtering control device **100** of FIG. **10** comprises a first offset calculator **181** configured to calculate a first offset based on

$$\frac{9\times(q0_j-p0_j)-3\times(q1_j-p1_j)}{16}.$$

A first pixel modifier **190** of the filtering control device **100** is configured to modify the pixel value of the pixel **11** closest to the block boundary **1** in the line **12** of pixels **11**, **13**, **15**, **17** by adding the first offset to the pixel value of this pixel **11**. A second pixel value modifier **192** is configured to modify the pixel value of the pixel **21** closest to the block boundary **1** in the corresponding line **12** of pixels **21**, **23**, **25**, **27** by subtracting the first offset from the pixel value of this pixel **21**.

A second offset calculator **183** is preferably implemented in the filtering control device **100** to calculate a second offset if the first filter decision value is below the first threshold value as determined by the first comparator **180**. The second offset is then calculated based on

$$\frac{p0_j+p2_j-2p1_j+2\Delta}{4}.$$

A third pixel modifier **194** is operated if the first filter decision value is below the first threshold value. In such a case, the third pixel modifier **194** is configured to modify the pixel value of the pixel **13** next closest to the block boundary **1** in the line **12** of pixels **11**, **13**, **15**, **17** by adding the second offset to the pixel value of this pixel **13**.

A third offset calculator **185** is configured to calculate a third offset based on

$$\frac{q0_j+q2_j-2q1_j-2\Delta}{4}$$

if the second filter decision value is below the second threshold value as determined by the second comparator **182**. If the second filter decision value is below the second threshold value a fourth pixel modifier **196** of the filtering control device **100** is configured to modify the pixel value of the pixel **23** next closest to the block boundary **1** in the corresponding line **22** of pixels **21**, **23**, **25**, **27** by adding the third offset to the pixel value of this pixel **23**.

The embodiments of the filtering control device **100** discussed in the foregoing in connection with FIGS. **9** and **10** compares filter decision values to respective threshold values. In an embodiment, such threshold values are calculated by the filtering control device **100** for the particular block boundary **1**. The filtering control device **100** then preferably comprises a threshold determiner **170** or threshold determining processor or unit configured to determine the first threshold value used by the first comparator **180** in FIG. **10** and the third threshold value used by the filtering control device **100** in FIG. **9** based on a quantization parameter associated with the block **10**. Correspondingly, the threshold determiner **170** correspondingly preferably determines the second threshold value used by the second comparator **182** in FIG. **10** and the fourth threshold value used by the filtering control device **100** in FIG. **9** based on a quantization parameter associated with the neighboring block **20**.

FIG. **11** is schematic block diagram of yet another embodiment of a filtering control device **100**. In addition to the units **110**-**140** of the embodiment illustrated in FIG. **8**, the filtering control device **100** comprises in this embodiment a third comparator **184** configured to compare a sum of the first filter decision value and the second filter decision value to a threshold value. If the sum is equal to or exceeds the threshold value the first and second pixel determiners **130**, **140** will not determine any number of pixels to filter since no filtering is to be applied to the block **10** and the neighboring block **20** with regard to the particular block

boundary **1**. However, if the sum is below the threshold, the first and second pixel determiners **130**, **140** are operated to determine the number of pixels to filter based on the first or second filter decision values, respectively.

The embodiments of the filtering control device **100** discussed in the foregoing and disclosed in FIGS. **8-11** can be combined. For instance, the third value calculator **150** and fourth value calculator **160** of FIG. **9** can be implemented in any of the embodiments disclosed in FIG. **10** or **11**. Correspondingly, the third comparator **184** of FIG. **11** can be implemented in any of the embodiments disclosed in FIG. **9** or **10**.

Although the respective units **110-196** disclosed in conjunction with FIGS. **8-11** have been disclosed as physically separate units **110-196** in the filtering control device **100**, and all may be special purpose circuits, such as ASICs (Application Specific Integrated Circuits), alternative embodiments of the filtering control device **100** are possible where some or all of the units **110-196** are implemented as computer program modules running on a general purpose processor. Such an embodiment is disclosed in FIG. **12**.

FIG. **12** schematically illustrates an embodiment of a computer **70** having a processing unit **72**, such as a DSP (Digital Signal Processor) or CPU (Central Processing Unit). The processing unit **72** can be a single unit or a plurality of units for performing different steps of the method described herein. The computer **70** also comprises an input/output (I/O) unit **71** for receiving recorded or generated video frames or encoded video frames and outputting encoded video frame or decoded video data. The I/O unit **71** has been illustrated as a single unit in FIG. **12** but can likewise be in the form of a separate input unit and a separate output unit.

Furthermore, the computer **70** comprises at least one computer program product **73** in the form of a non-volatile memory, for instance an EEPROM (Electrically Erasable Programmable Read-Only Memory), a flash memory or a disk drive. The computer program product **73** comprises a computer program **74**, which comprises code means which when run on or executed by the computer **70**, such as by the processing unit **72**, causes the computer **70** to perform the steps of the method described in the foregoing in connection with FIG. **1**. Hence, in an embodiment the code means in the computer program **74** comprises a first decision value calculating (DVC) module **310** for calculating the first filter decision value for a block, a second pixel value calculating module **320** for calculating the second filter decision value for the block, a first pixel determining (PD) module **330** for determining how many pixels in the line **12** of pixels **11**, **13**, **15**, **17** to filter and a second pixel determining module **340** for determining how many pixels in the corresponding line **22** of pixels **21**, **23**, **25**, **27** to filter. These modules **310-340** essentially perform the steps of the flow diagram in FIG. **1** when run on the processing unit **72**. Thus, when the different modules **310-340** are run on the processing unit **72** they correspond to the corresponding units **110-140** of FIGS. **8-11**.

The computer program **74** may additionally comprise a third decision value calculating module, a fourth decision value calculating module, a threshold determining module, a first comparing module, second comparing module, a third comparing module, a first offset calculating module, a second offset calculating module, a third offset calculating module, a first pixel modifying module, a second pixel modifying module, a third pixel modifying module and/or a fourth pixel modifying module to perform the operation of the corresponding units **150-196** in FIGS. **9-11**.

The computer **70** of FIG. **12** can be a user equipment or be present in a user equipment. In such a case, the user equipment may additionally comprise or be connected to a display to display video data.

The filtering control device of FIGS. **8-11** is preferably used in video coding. It functions and is therefore preferably implemented both in a video encoder and in a video decoder. The video decoder can be implemented preferably in hardware but also in software. The same holds for the video encoder.

FIG. **13** is a schematic block diagram of an encoder **40** for encoding a block of pixels in a video frame of a video sequence according to an embodiment.

A current block of pixels is predicted by performing a motion estimation by a motion estimator **50** from an already provided block of pixels in the same frame or in a previous frame. The result of the motion estimation is a motion or displacement vector associated with the reference block, in the case of inter prediction. The motion vector is utilized by a motion compensator **50** for outputting an inter prediction of the block of pixels.

An intra predictor **49** computes an intra prediction of the current block of pixels. The outputs from the motion estimator/compensator **50** and the intra predictor **49** are input in a selector **51** that either selects intra prediction or inter prediction for the current block of pixels. The output from the selector **51** is input to an error calculator in the form of an adder **41** that also receives the pixel values of the current block of pixels. The adder **41** calculates and outputs a residual error as the difference in pixel values between the block of pixels and its prediction.

The error is transformed in a transformer **42**, such as by a discrete cosine transform, and quantized by a quantizer **43** followed by coding in an encoder **44**, such as by entropy encoder. In inter coding, also the estimated motion vector is brought to the encoder **44** for generating the coded representation of the current block of pixels.

The transformed and quantized residual error for the current block of pixels is also provided to a inverse quantizer **45** and inverse transformer **46** to retrieve the original residual error. This error is added by an adder **47** to the block prediction output from the motion compensator **50** or the intra predictor **49** to create a reference block of pixels that can be used in the prediction and coding of a next block of pixels. This new reference block is first processed by a filtering control device **100** according to the embodiments in order to control any deblocking filtering that is applied to the reference block to combat any blocking artifact. The processed new reference block is then temporarily stored in a frame buffer **48**, where it is available to the intra predictor **49** and the motion estimator/compensator **50**.

FIG. **14** is a corresponding schematic block diagram of a decoder **60** comprising a filtering control device **100** according to the embodiments. The decoder **60** comprises a decoder **61**, such as entropy decoder, for decoding an encoded representation of a block of pixels to get a set of quantized and transformed residual errors. These residual errors are dequantized in an inverse quantizer **62** and inverse transformed by an inverse transformer **63** to get a set of residual errors.

These residual errors are added in an adder **64** to the pixel values of a reference block of pixels. The reference block is determined by a motion estimator/compensator **67** or intra predictor **66**, depending on whether inter or intra prediction is performed. A selector **68** is thereby interconnected to the adder **64** and the motion estimator/compensator **67** and the intra predictor **66**. The resulting decoded block of pixels

output form the adder **64** is input to a filtering control device **100** according to the embodiments in order to control any deblocking filter that is applied to combat any blocking artifacts. The filtered block of pixels is output form the decoder **60** and is furthermore preferably temporarily provided to a frame buffer **65** and can be used as a reference block of pixels for a subsequent block of pixels to be decoded. The frame buffer **65** is thereby connected to the motion estimator/compensator **67** to make the stored blocks of pixels available to the motion estimator/compensator **67**.

The output from the adder **64** is preferably also input to the intra predictor **66** to be used as an unfiltered reference block of pixels.

In the embodiments disclosed in FIGS. **13** and **14** the filtering control device **100** controls deblocking filtering in the form of so called in-loop filtering. In an alternative implementation at the decoder **60** the filtering control device **100** is arranged to perform so called post-processing filtering. In such a case, the filtering control device **100** operates on the output frames outside of the loop formed by the adder **64**, the frame buffer **65**, the intra predictor **66**, the motion estimator/compensator **67** and the selector **68**. No deblocking filtering and filtering control is then typically done at the encoder.

FIG. **15** is a schematic block diagram of a user equipment or media terminal **80** housing a decoder **60** with a filtering control device. The user equipment **80** can be any device having media decoding functions that operates on an encoded video stream of encoded video frames to thereby decode the video frames and make the video data available. Non-limiting examples of such devices include mobile telephones and other portable media players, tablets, desktops, notebooks, personal video recorders, multimedia players, video streaming servers, set-top boxes, TVs, computers, decoders, game consoles, etc. The user equipment **80** comprises a memory **84** configured to store encoded video frames. These encoded video frames can have been generated by the user equipment **80** itself. Alternatively, the encoded video frames are generated by some other device and wirelessly transmitted or transmitted by wire to the user equipment **80**. The user equipment **80** then comprises a transceiver (transmitter and receiver) or input and output port **82** to achieve the data transfer.

The encoded video frames are brought from the memory **84** to a decoder **60**, such as the decoder illustrated in FIG. **14**. The decoder **60** comprises a filtering control device **100** according to embodiments. The decoder then decodes the encoded video frames into decoded video frames. The decoded video frames are provided to a media player **86** that is configured to render the decoded video frames into video data that is displayable on a display or screen **88** of or connected to the user equipment **80**.

In FIG. **15**, the user equipment **80** has been illustrated as comprising both the decoder **60** and the media player **86**, with the decoder **60** implemented as a part of the media player **86**. This should, however, merely be seen as an illustrative but non-limiting example of an implementation embodiment for the user equipment **80**. Also distributed implementations are possible where the decoder **60** and the media player **86** are provided in two physically separated devices are possible and within the scope of user equipment **80** as used herein. The display **88** could also be provided as a separate device connected to the user equipment **80**, where the actual data processing is taking place.

FIG. **16** illustrates another embodiment of a user equipment **80** that comprises en encoder, such as the encoder of FIG. **13**, comprising a filtering control device according to the embodiments. The encoder **40** is then configured to encode video frames received by the I/O unit **82** and/or generated by the user equipment itself. In the latter case, the user equipment **80** preferably comprises a media engine or recorder, such as in the form of or connected to a (video) camera. The user equipment **80** may optionally also comprise a media player **86**, such as a media player **86** with a decoder and filtering control device according to the embodiments, and a display **88**.

As illustrated in FIG. **17**, the encoder **40** and/or decoder **60**, such as illustrated in FIGS. **13** and **14**, may be implemented in a network device **30** being or belonging to a network node in a communication network **32** between a sending unit **34** and a receiving user equipment **36**. Such a network device **30** may be a device for converting video according to one video coding standard to another video coding standard, for example, if it has been established that the receiving user equipment **36** is only capable of or prefers another video coding standard than the one sent from the sending unit **34**. The network device **30** can be in the form of or comprised in a radio base station, a Node-B or any other network node in a communication network **32**, such as a radio-based network.

The embodiments described above are to be understood as a few illustrative examples of the present invention. It will be understood by those skilled in the art that various modifications, combinations and changes may be made to the embodiments without departing from the scope of the present invention. In particular, different part solutions in the different embodiments can be combined in other configurations, where technically possible. The scope of the present invention is, however, defined by the appended claims.

The invention claimed is:

1. A method for filtering control applicable to a block of multiple pixels in a video frame, each pixel having a respective pixel value, said method comprising:

calculating a first filter decision value for said block, by only using pixels $p2_i$, $p1_i$ and $p0_i$, based on:

$$|p2_i-2p1_i+p0_i|$$

wherein $p0_i$ denotes a pixel value of a pixel closest to, in a first line of pixels in said block, a block boundary to a neighboring block of multiple pixels in said video frame, $p1_i$ denotes a pixel value of a pixel next closest to, in said first line of pixels, said block boundary and $p2_i$ denotes a pixel value of a pixel second next closest to, in said first line of pixels, said block boundary;

calculating a second filter decision value for said neighboring block, by only using pixels $q2_i$, $q1_i$ and $q0_i$, based on:

$$|q2_i-2q1_i+q0_i|$$

wherein $q0_i$ denotes a pixel value of a pixel in said neighboring block closest to, in a corresponding first line of pixels in said neighboring block, said block boundary, $q1_i$ denotes a pixel value of a pixel of said neighboring block next closest to, in said corresponding first line of pixels, said block boundary and $q2_i$ denotes a pixel value of a pixel in said neighboring block second next closest to, in said corresponding first line of pixels, said block boundary;

determining how many pixels in said first line of pixels in said block to filter relative to said block boundary based on a comparison of said first filter decision value to a first threshold value; and

determining how many pixels in said corresponding first line of pixels in said neighboring block to filter relative

to said block boundary based on a comparison of said second filter decision value to a second threshold value.

2. The method according to claim **1**, wherein

calculating said first filter decision value comprises calculating said first filter decision value as:

$$|p2_0-2p1_0+p0_0|+|p2_3-2p1_3+p0_3|$$

wherein $p0_0$ denotes said pixel value of said pixel closest to, in said first line of pixels, said block boundary, $p1_0$ denotes said pixel value of said pixel next closest to, in said first line of pixels, said block boundary, $p2_0$ denotes said pixel value of said pixel second next closest to, in said first line of pixels, said block boundary, $p0_3$ denotes a pixel value of a pixel closest to, in a second line of pixels in said block, said block boundary, $p1_3$ denotes a pixel value of a pixel next closest to, in said second line of pixels, said block boundary and $p2_3$ denotes a pixel value of a pixel second next closest to, in said second line of pixels, said block boundary; and

calculating said second filter decision value comprises calculating said second filter decision value as:

$$|q2_0-2q1_0+q0_0|+|q2_3-2q1_3+q0_3|$$

wherein $q0_0$ denotes said pixel value of said pixel in said neighboring block closest to, in said corresponding first line of pixels, said block boundary, $q1_0$ denotes said pixel value of said pixel of said neighboring block next closest to, in said corresponding first line of pixels, said block boundary, $q2_0$ denotes said pixel value of said pixel in said neighboring block second next closest to, in said corresponding first line of pixels, said block boundary, $q0_3$ denotes a pixel value of a pixel in said neighboring block closest to, in a corresponding second line of pixels in said neighboring block, said block boundary, $q1_3$ denotes a pixel value of a pixel of said neighboring block next closest to, in said corresponding second line of pixels, said block boundary and $q2_3$ denotes a pixel value of a pixel in said neighboring block second next closest to, in said corresponding second line of pixels, said block boundary.

3. The method according to claim **1**, wherein

determining how many pixels in said first line of pixels in said block to filter comprises:

comparing said first filter decision value to a first threshold value;

determining to filter two pixels in said first line of pixels in said block relative to said block boundary if said first filter decision value is below said first threshold value; and

determining to filter one pixel in said first line of pixels in said block relative to said block boundary if said first filter decision value is equal to or exceeds said first threshold value; and

determining how many pixels in said corresponding first line of pixels in said neighboring block to filter comprises:

comparing said second filter decision value to a second threshold value;

determining to filter two pixels in said corresponding first line of pixels in said neighboring block relative to said block boundary if said second filter decision value is below said second threshold value; and

determining to filter one pixel in said corresponding first line of pixels in said neighboring block relative to said block boundary if said second filter decision value is equal to or exceeds said second threshold value.

4. The method according to claim **1**, wherein

determining how many pixels in said first line of pixels in said block to filter comprises:

comparing said first filter decision value to a first threshold value;

determining to filter two pixels in said first line of pixels in said block relative to said block boundary if said first filter decision value is below said first threshold value; and

determining to filter no pixels in said first line of pixels in said block relative to said block boundary if said first filter decision value is equal to or exceeds said first threshold value; and

determining how many pixels in said corresponding first line of pixels in said neighboring block to filter comprises:

comparing said second filter decision value to a second threshold value;

determining to filter two pixels in said corresponding first line of pixels in said neighboring block relative to said block boundary if said second filter decision value is below said second threshold value; and

determining to filter no pixels in said corresponding first line of pixels in said neighboring block relative to said block boundary if said second filter decision value is equal to or exceeds said second threshold value.

5. A filtering control device comprising:

a first decision value calculator configured to calculate a first filter decision value for a block of multiple pixels in a video frame, by only using pixels $p2_i$, $p1_i$ and $p0_i$, based on:

$$|p2_i-2p1_i+p0_i|$$

wherein $p0_i$ denotes a pixel value of a pixel closest to, in a first line of pixels in said block, a block boundary to a neighboring block of multiple pixels in said video frame, $p1_i$ denotes a pixel value of a pixel next closest to, in said first line of pixels, said block boundary and $p2_i$ denotes a pixel value of a pixel second next closest to, in said first line of pixels, said block boundary;

a second decision value calculator configured to calculate a second filter decision value for a neighboring block, by only using pixels $q2_i$, $q1_i$ and $q0_i$, based on:

$$|q2_i-2q1_i+q0_i|$$

wherein $q0_i$ denotes a pixel value of a pixel in said neighboring block closest to, in a corresponding first line of pixels in said neighboring block, said block boundary, $q1_i$ denotes a pixel value of a pixel of said neighboring block next closest to, in said corresponding first line of pixels, said block boundary and $q2_i$ denotes a pixel value of a pixel in said neighboring block second next closest to, in said corresponding first line of pixels, said block boundary;

a first pixel determiner configured to determine how many pixels in a first line of pixels in said block to filter relative to said block boundary based on said first filter decision value calculated by said first decision value calculator; and

a second pixel determiner configured to determine how many pixels in a corresponding first line of pixels in said neighboring block to filter relative to said block boundary based on said second filter decision value calculated by said second decision value calculator, wherein

further comprising a first comparator configured to compare said first filter decision value calculated by said first decision value calculator to a first threshold value; and

a second comparator configured to compare said second filter decision value calculated by said second decision value calculator to a second threshold value.

6. The device according to claim **5**, wherein

said first decision value calculator is configured to calculate said first filter decision value as:

$$|p2_0-2p1_0+p0_0|+|p2_3-2p1_3+p0_3|$$

wherein $p0_0$ denotes said pixel value of said pixel closest to, in said first line of pixels, said block boundary, $p1_0$ denotes said pixel value of said pixel next closest to, in said first line of pixels, said block boundary, $p2_0$ denotes said pixel value of said pixel second next closest to, in said first line of pixels, said block boundary, $p0_3$ denotes a pixel value of a pixel closest to, in a second line of pixels in said block, said block boundary, $p1_3$ denotes a pixel value of a pixel next closest to, in said second line of pixels, said block boundary and $p2_3$ denotes a pixel value of a pixel second next closest to, in said second line of pixels, said block boundary; and

said second decision value calculator is configured to calculate said second filter decision value as:

$$|q2_0-2q1_0+q0_0|+|q2_3-2q1_3+q0_3|$$

wherein $q0_0$ denotes said pixel value of said pixel in said neighboring block closest to, in said corresponding first line of pixels, said block boundary, $q1_0$ denotes said pixel value of said pixel of said neighboring block next closest to, in said corresponding first line of pixels, said block boundary, $q2_0$ denotes said pixel value of said pixel in said neighboring block second next closest to, in said corresponding first line of pixels, said block boundary, $q0_3$ denotes a pixel value of a pixel in said neighboring block closest to, in a corresponding second line of pixels in said neighboring block, said block boundary, $q1_3$ denotes a pixel value of a pixel of said neighboring block next closest to, in said corresponding second line of pixels, said block boundary and $q2_3$ denotes a pixel value of a pixel in said neighboring block second next closest to, in said corresponding second line of pixels, said block boundary.

7. The device according to claim **5**, further comprising:

said first pixel determiner is configured to i) determine to filter two pixels in said first line of pixels in said block relative to said block boundary if said first filter decision value is below said first threshold value as determined by said first comparator and ii) determine to filter one pixel in said first line of pixels in said block relative to said block boundary if said first filter decision value is equal to or exceeds said first threshold value as determined by said first comparator; and

said second pixel determiner is configured to i) determine to filter two pixels in said corresponding first line of pixels in said neighboring block relative to said block boundary if said second filter decision value is below said second threshold value as determined by said second comparator and ii) determine to filter one pixel in said corresponding first line of pixels in said neighboring block relative to said block boundary if said second filter decision value is equal to or exceeds said second threshold value as determined by said second comparator.

8. The device according to claim **5**, further comprising:

a first comparator configured to compare said first filter decision value calculated by said first decision value calculator to a first threshold value; and

a second comparator configured to compare said second filter decision value calculated by said second decision value calculator to a second threshold value, wherein said first pixel determiner is configured to i) determine to filter two pixels in said first line of pixels in said block relative to said block boundary if said first filter decision value is below said first threshold value as determined by said first comparator and ii) determine to filter no pixels in said first line of pixels in said block relative to said block boundary if said first filter decision value is equal to or exceeds said first threshold value as determined by said first comparator; and

said second pixel determiner is configured to i) determine to filter two pixels in said corresponding first line of pixels in said neighboring block relative to said block boundary if said second filter decision value is below said second threshold value as determined by said second comparator and ii) determine to filter no pixels in said corresponding first line of pixels in said neighboring block relative to said block boundary if said second filter decision value is equal to or exceeds said second threshold value as determined by said second comparator.

9. The device according to claim **5**, further comprising a threshold determiner configured to i) determine said first threshold value based on a quantization parameter associated with said block, and ii) determine said second threshold value based on a quantization parameter associated with said neighboring block.

10. The device according to claim **5**, further comprising:

a first offset calculator configured to calculate a first offset Δ based on

$$\frac{9\times(q0_j-p0_j)-3\times(q1_j-p1_j)}{16},$$

wherein $p0_j$ denotes a pixel value of a pixel closest to, in said first line of pixels, said block boundary, $p1_j$ denotes a pixel value of a pixel next closest to, in said first line of pixels, said block boundary, $q0_j$ denotes a pixel value of a pixel in said neighboring block closest to, in said corresponding first line of pixels, said block boundary and $q1_i$ denotes a pixel value of a pixel of said neighboring block next closest to, in said corresponding first line of pixels, said block boundary;

a first pixel modifier configured to modify said pixel value of said pixel closest to said block boundary in said first line of pixels by adding said first offset calculated by said first offset calculator to said pixel value of said pixel closest to said block boundary in said first line of pixels;

a second pixel modifier configured to modify said pixel value of said pixel in said neighboring block closest to said block boundary in said corresponding first line of pixels by subtracting said first offset calculated by said first offset calculator from said pixel value of said pixel in said neighboring block closest to said block boundary in said corresponding first line of pixels;

a second offset calculator configured to calculate, if said first filter decision value is below said first threshold value as determined by said first comparator, a second offset based on

$$\frac{p0_j + p2_j - 2p1_j + 2\Delta}{4},$$

wherein $p2_j$ denotes a pixel value of a pixel second next closest to, in said first line of pixels, said block boundary;

a third pixel modifier configured to modify, if said first filter decision value is below said first threshold as determined by said first comparator, said pixel value of said pixel next closest to said block boundary in said first line of pixels by adding said second offset calculated by said second offset calculator to said pixel value of said pixel next closest to said block boundary in said first line of pixels;

a third offset calculator configured to calculate, if said second filter decision value is below said second threshold value as determined by said second comparator, a third offset based on

$$\frac{q0_j + q2_j - 2q1_j - 2\Delta}{4},$$

wherein $q2_j$ denotes a pixel value of a pixel in said neighboring block second next closest to, in said corresponding first line of pixels, said block boundary; and

a fourth pixel modifier configured to modify, if said second filter decision value is below said second threshold as determined by said second comparator, said pixel value of said pixel in said neighboring block next closest to said block boundary in said corresponding first line of pixels by adding said third offset calculated by said third offset calculator to said pixel value of said pixel in said neighboring block next closest to said block boundary in said corresponding first line of pixels.

11. The device according to claim **5**, further comprising a third comparator configured to compare a sum of said first filter decision value and said second filter decision value to a threshold value, wherein

said first pixel determiner is configured to determine, if said sum of said first filter decision value and said second filter decision value is below said threshold value as determined by said third comparator, how many pixels in said first line of pixels in said block to filter relative to said block boundary based on said first filter decision value calculated by said first decision value calculator; and

said second pixel determiner is configured to determine, if said sum of said first filter decision value and said second filter decision value is below said threshold value as determined by said third comparator, how many pixels in said corresponding first line of pixels in said neighboring block to filter relative to said block boundary based on said second filter decision value calculated by said second decision value calculator.

12. An encoder comprising a filtering control device according to claim **5**.

13. A user equipment comprising:

a memory configured to store video frames; and

an encoder according to claim **12** configured to encode said video frames into encoded video frames, wherein said memory is further configured to store said encoded video frames.

14. A decoder comprising a filtering control device according to claim **5**.

15. A user equipment comprising:

a memory configured to store encoded video frames;

a decoder according to claim **14** configured to decode said encoded video frames into decoded video frames; and

a media player configured to render said decoded video frames into video data displayable on a display.

16. A non-transitory computer-readable medium comprising, stored thereupon, a computer program for filtering control of a block of multiple pixels in a video frame, each pixel having a respective pixel value, said computer program comprising code means which when run on a computer causes the computer to:

calculate a first filter decision value for said block, by only using pixels $p2_i$, $p1_i$ and $p0_i$, based on:

$$|p2_i - 2p1_i + p0_i|$$

wherein $p0_i$ denotes a pixel value of a pixel closest to, in a first line of pixels in said block, a block boundary to a neighboring block of multiple pixels in said video frame, $p1_i$ denotes a pixel value of a pixel next closest to, in said first line of pixels, said block boundary and $p2_i$ denotes a pixel value of a pixel second next closest to, in said first line of pixels, said block boundary;

calculate a second filter decision value for said neighboring block, by only using pixels $q2_i$, $q1_i$ and $q0_i$, based on:

$$|q2_i - 2q1_i + q0_i|$$

wherein $q0_i$ denotes a pixel value of a pixel in said neighboring block closest to, in a corresponding first line of pixels in said neighboring block, said block boundary, $q1_i$ denotes a pixel value of a pixel of said neighboring block next closest to, in said corresponding first line of pixels, said block boundary and $q2_i$ denotes a pixel value of a pixel in said neighboring block second next closest to, in said corresponding first line of pixels, said block boundary;

determine how many pixels in a first line of pixels in said block to filer relative to said block boundary based on said first filter decision value; and

determine how many pixels in a corresponding first line of pixels in said neighboring block to filter relative to said block boundary based on said second filter decision value,

wherein determine how many pixels in said first line of pixels in said block to filter comprises determining how many pixels in said first line of pixels in said block to filter relative to said block boundary based on a comparison of said first filter decision value to a first threshold value; and

determine how many pixels in said corresponding first line of pixels in said neighboring block to filter comprises determining how many pixels in said corresponding first line of pixels in said neighboring block to filter relative to said block boundary based on a comparison of said second filter decision value to a second threshold value.

* * * * *