US007227901B2

(12) **United States Patent**
Joch et al.

(10) **Patent No.: US 7,227,901 B2**
(45) **Date of Patent: Jun. 5, 2007**

(54) **LOW-COMPLEXITY DEBLOCKING FILTER**

(75) Inventors: **Anthony Joch**, Vancouver (CA); **James Au**, Port Coquitlam (CA); **Yu-sheng Brandon Lin**, Richmond (CA)

(73) Assignee: **UB Video Inc.**, Vancouver, British Columbia (CA)

(*) Notice: Subject to any disclaimer, the term of this patent is extended or adjusted under 35 U.S.C. 154(b) by 557 days.

(21) Appl. No.: **10/300,849**

(22) Filed: **Nov. 21, 2002**

(65) **Prior Publication Data**

US 2006/0104349 A1 May 18, 2006

(51) **Int. Cl.**
H04N 7/18 (2006.01)

(52) **U.S. Cl.** **375/240.29**; 375/240.26

(58) **Field of Classification Search** 375/240.01–240.29

See application file for complete search history.

(56) **References Cited**

U.S. PATENT DOCUMENTS

5,422,964 A 6/1995 Devimeux et al.
5,428,395 A 6/1995 Jeong
5,590,064 A 12/1996 Astle
5,608,652 A 3/1997 Astle
6,539,060 B1 3/2003 Lee et al.
6,704,759 B2 * 3/2004 Timko et al. 708/402
6,823,089 B1 11/2004 Yu et al.
7,031,393 B2 * 4/2006 Kondo et al. 375/240.29
2002/0118399 A1 8/2002 Estevex et al.

* cited by examiner

Primary Examiner—Andy Rao
(74) *Attorney, Agent, or Firm*—McCarthy Tétrault LLP; Christopher N. Hunter

(57) **ABSTRACT**

A method of filtering to remove coding artifacts introduced at block edges in a block-based video coder, the method having the steps of: checking the content activity on every line of samples belonging to a boundary to be filtered and where content activity is based on a set of adaptively selected thresholds determined using Variable-Shift Table Indexing (VSTI); determining whether the filtering process will modify the sample values on that particular line based on said content activity; and selecting a filtering mode between at least two filtering modes to apply on a block boundary basis, implying that there would be no switching between the two primary modes on a line by line basis along a given block boundary. The two filtering modes include a default mode based on a non-recursive filter, and a strong filtering mode which features two strong filtering sub-modes and a new selection criterion that is one-sided with respect to the block boundary to determine which of the two strong filtering sub-modes to use. The two strong filtering sub-modes include a new 3-tap filter sub-mode and a 5-tap filter sub-mode that permits a more efficient implementation of the filter.

118 Claims, 8 Drawing Sheets

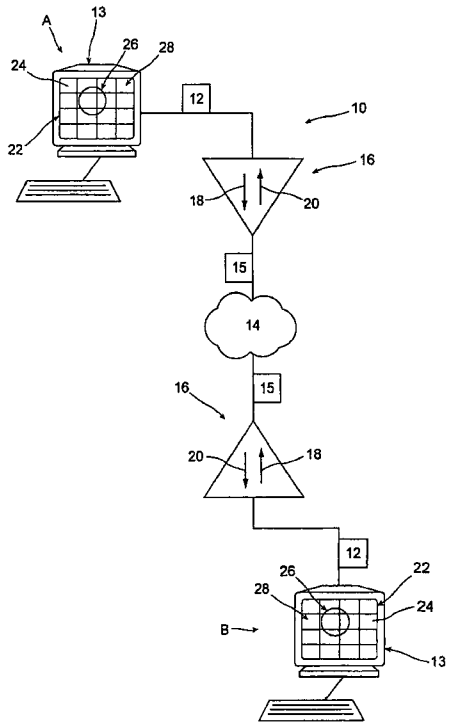

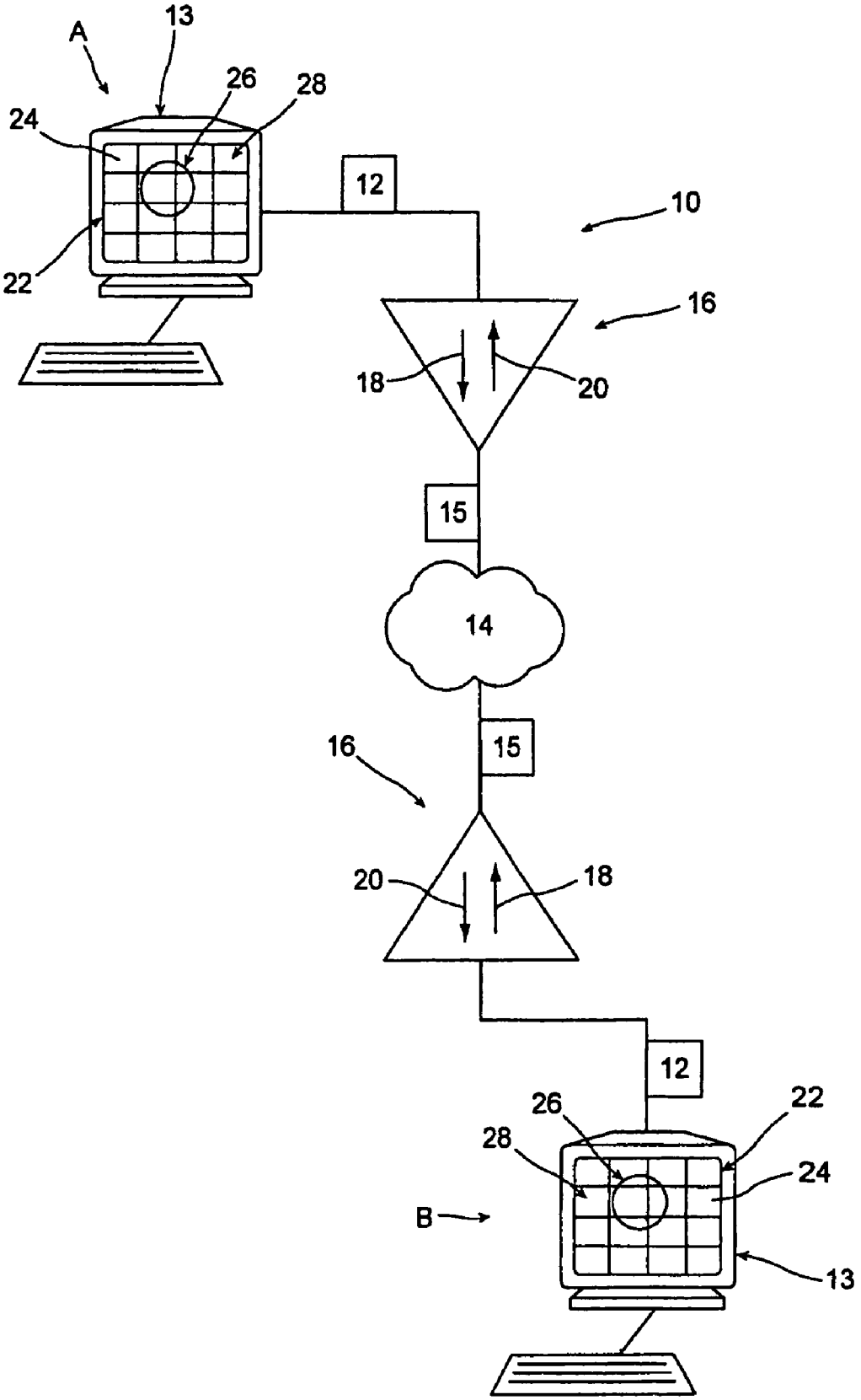

Figure 1

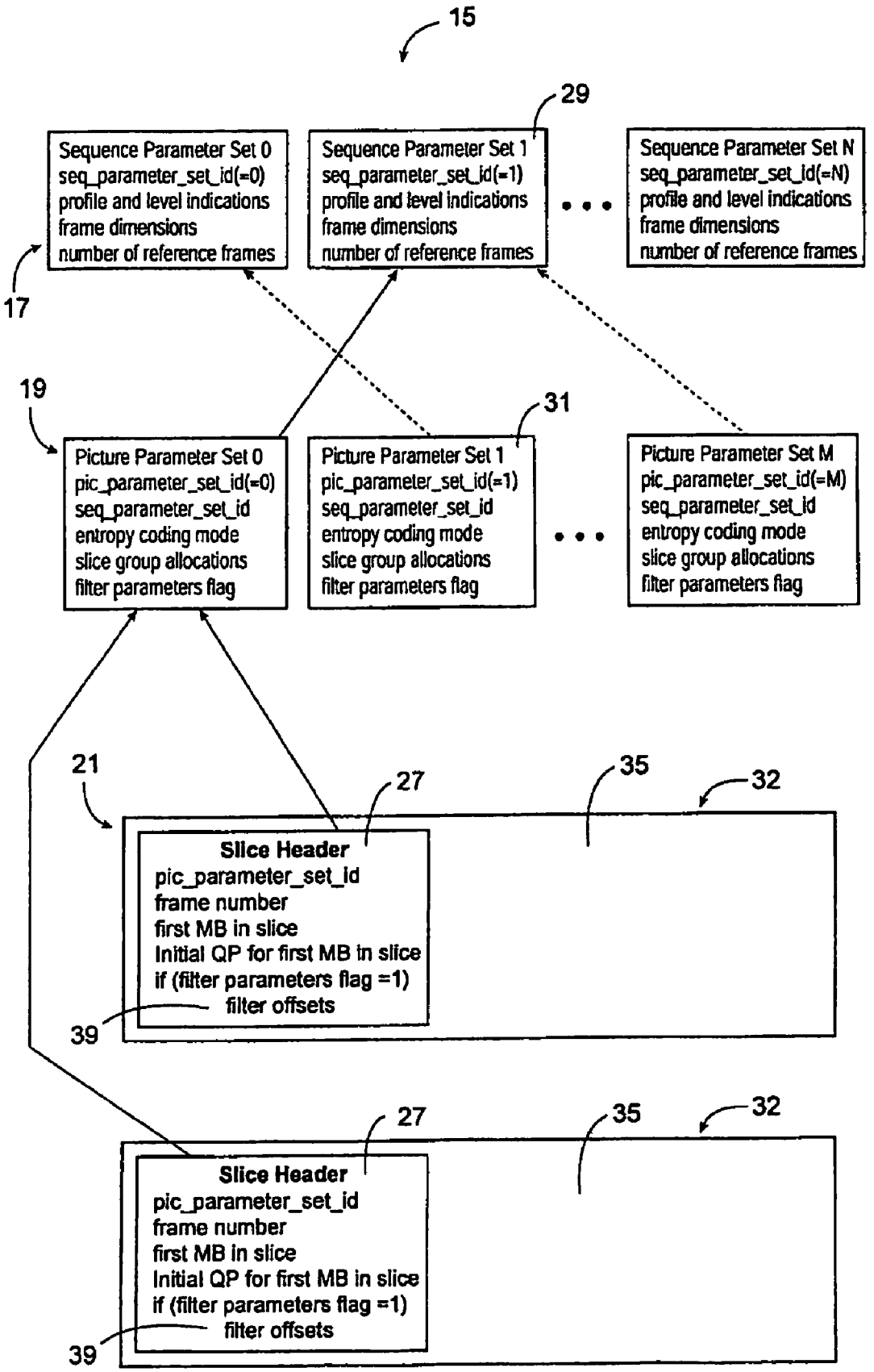
15
29
Sequence Parameter Set 0
seq_parameter_set_id(=0)
profile and level indications
frame dimensions
number of reference frames
Sequence Parameter Set 1
seq_parameter_set_id(=1)
profile and level indications
frame dimensions
number of reference frames
Sequence Parameter Set N
seq_parameter_set_id(=N)
profile and level indications
frame dimensions
number of reference frames
17
19
31
Picture Parameter Set 0
pic_parameter_set_id(=0)
seq_parameter_set_id
entropy coding mode
slice group allocations
filter parameters flag
Picture Parameter Set 1
pic_parameter_set_id(=1)
seq_parameter_set_id
entropy coding mode
slice group allocations
filter parameters flag
Picture Parameter Set M
pic_parameter_set_id(=M)
seq_parameter_set_id
entropy coding mode
slice group allocations
filter parameters flag
21
27
35
32
Slice Header
pic_parameter_set_id
frame number
first MB in slice
Initial QP for first MB in slice
if (filter parameters flag =1)
filter offsets
39
27
35
32
Slice Header
pic_parameter_set_id
frame number
first MB in slice
Initial QP for first MB in slice
if (filter parameters flag =1)
filter offsets
39

Figure 2

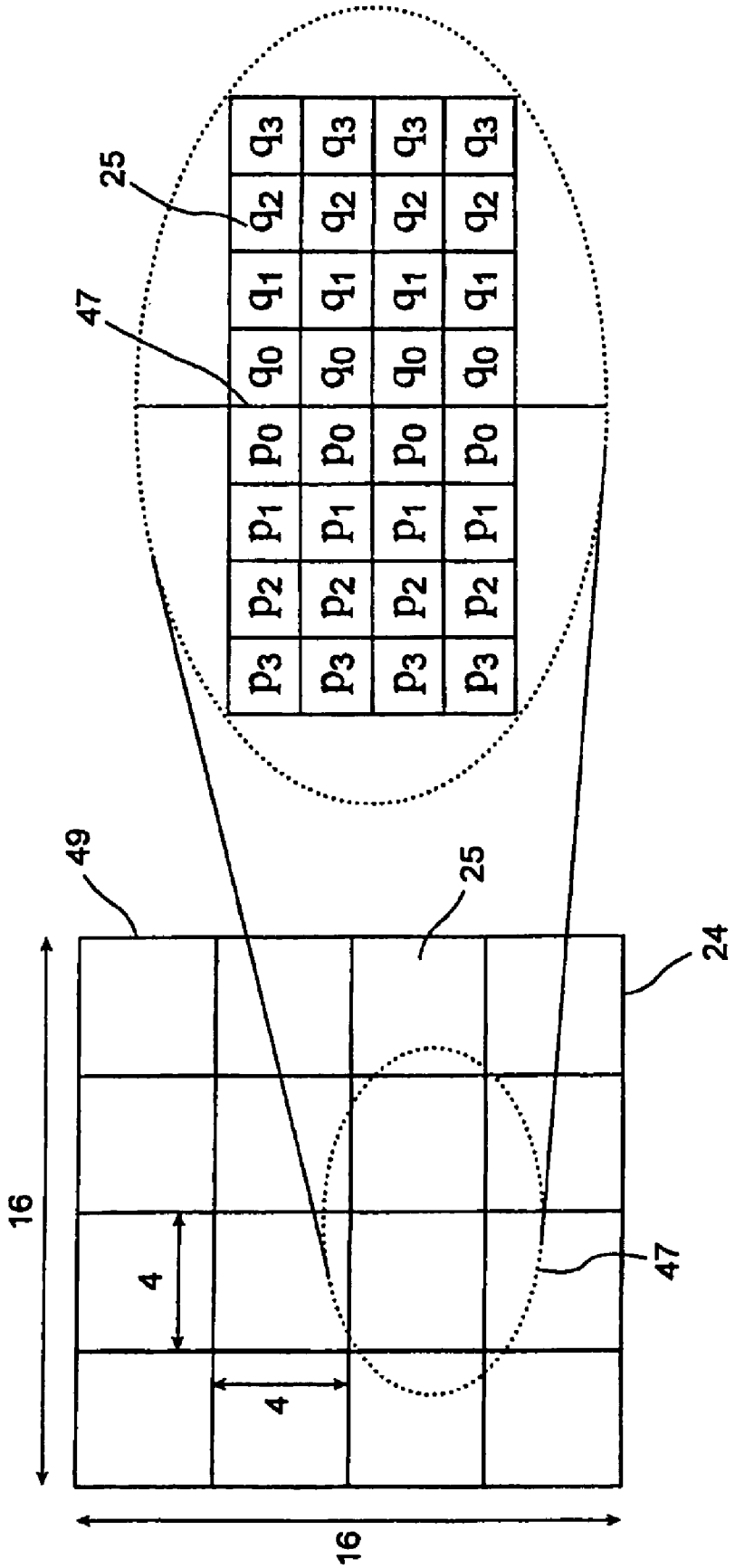
25
47
q_3 q_3 q_3 q_3
q_2 q_2 q_2 q_2
q_1 q_1 q_1 q_1
q_0 q_0 q_0 q_0
p_0 p_0 p_0 p_0
p_1 p_1 p_1 p_1
p_2 p_2 p_2 p_2
p_3 p_3 p_3 p_3
49
25
24
47
16
4
4
16

Figure 3a

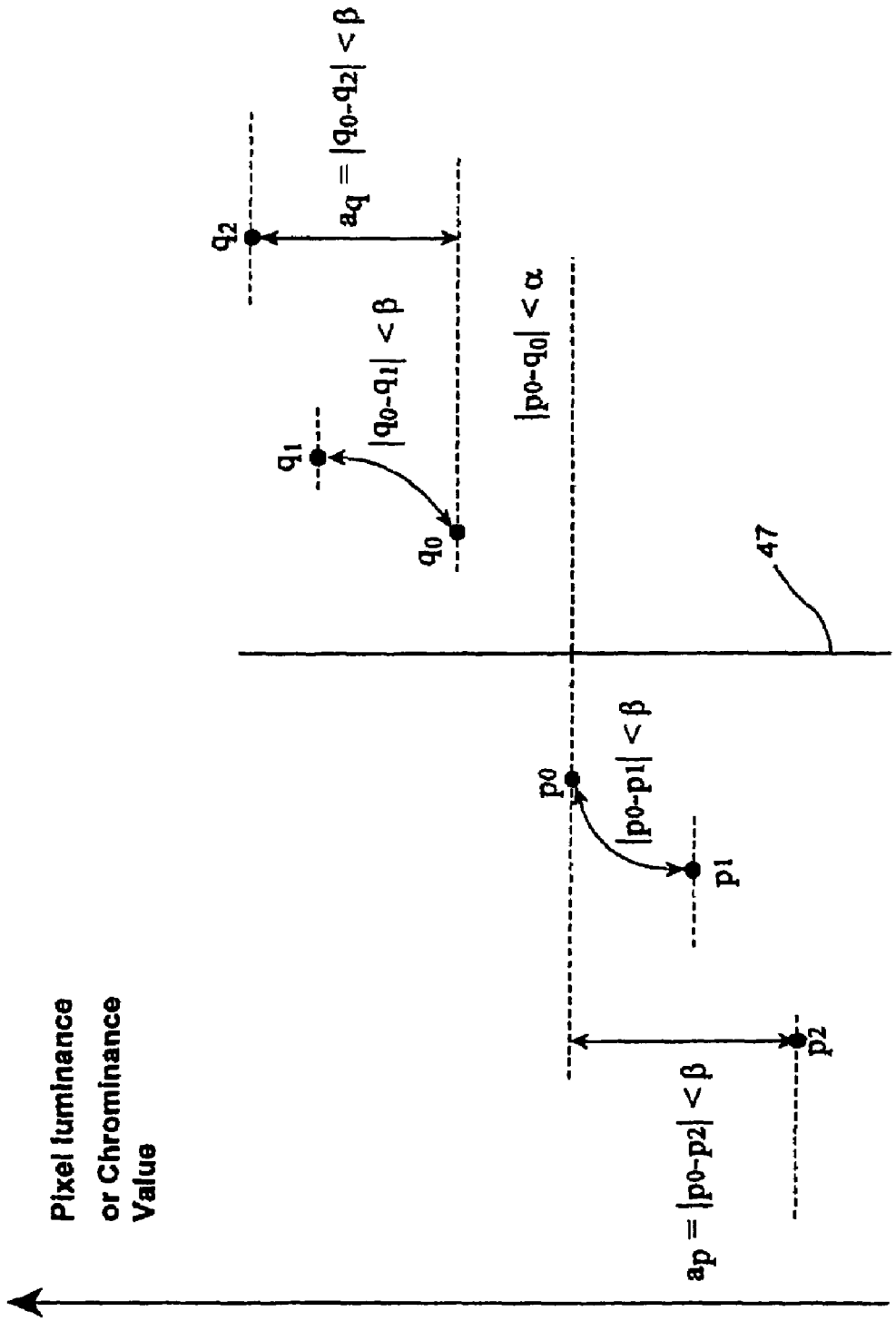
Pixel luminance
or Chrominance
Value
$a_p = |p_0-p_2| < \beta$
p_2
p_1
$|p_0-p_1| < \beta$
p_0
47
$|p_0-q_0| < \alpha$
q_0
q_1
$|q_0-q_1| < \beta$
$a_q = |q_0-q_2| < \beta$
q_2

Figure 3b

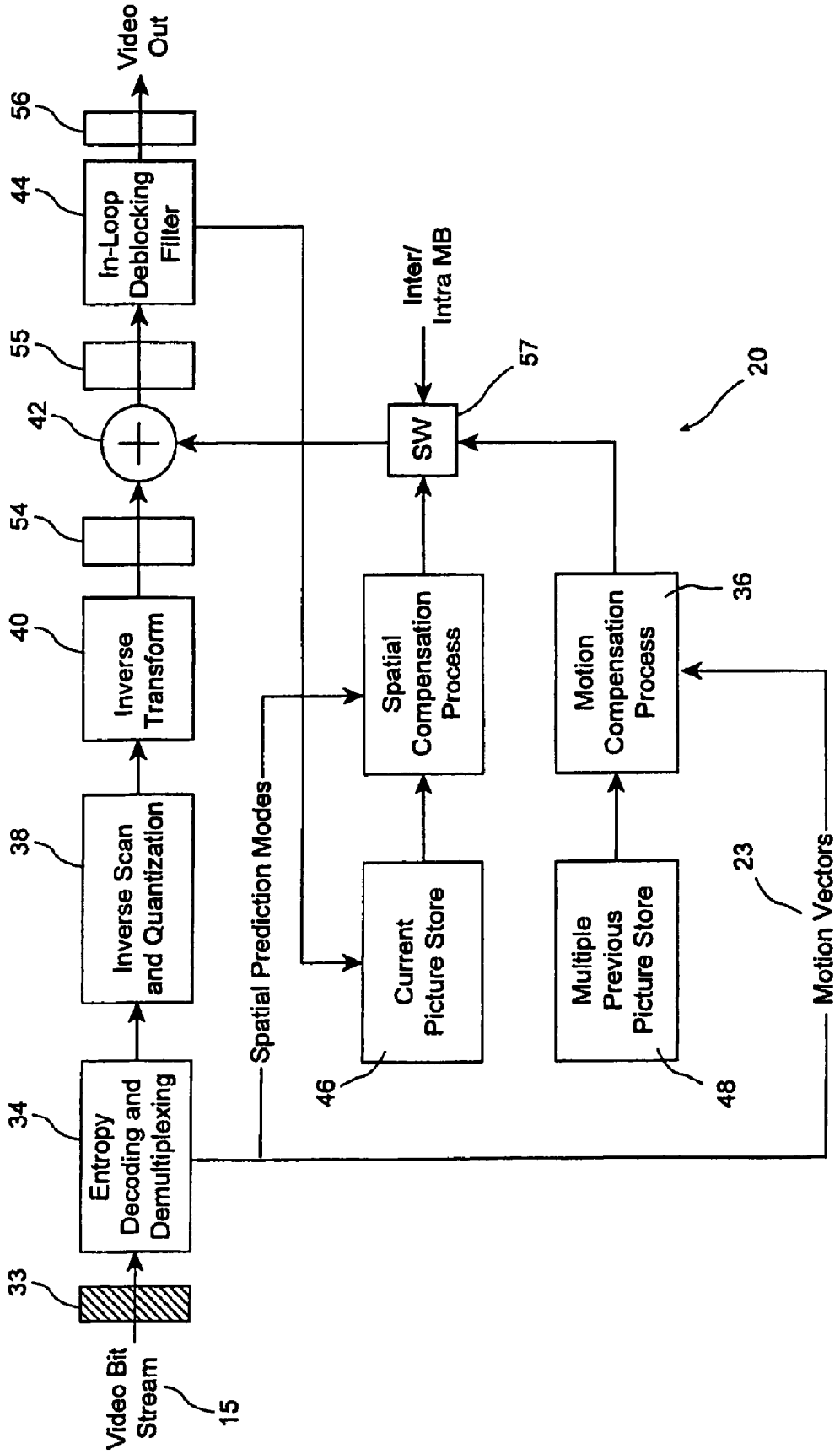
Video Bit Stream
15
33
34
Entropy Decoding and Demultiplexing
38
Inverse Scan and Quantization
40
Inverse Transform
54
42
55
44
In-Loop Deblocking Filter
56
Video Out
Spatial Prediction Modes
Current Picture Store
46
Spatial Compensation Process
Inter/ Intra MB
57
SW
20
Multiple Previous Picture Store
48
Motion Compensation Process
36
Motion Vectors
23

Figure 4

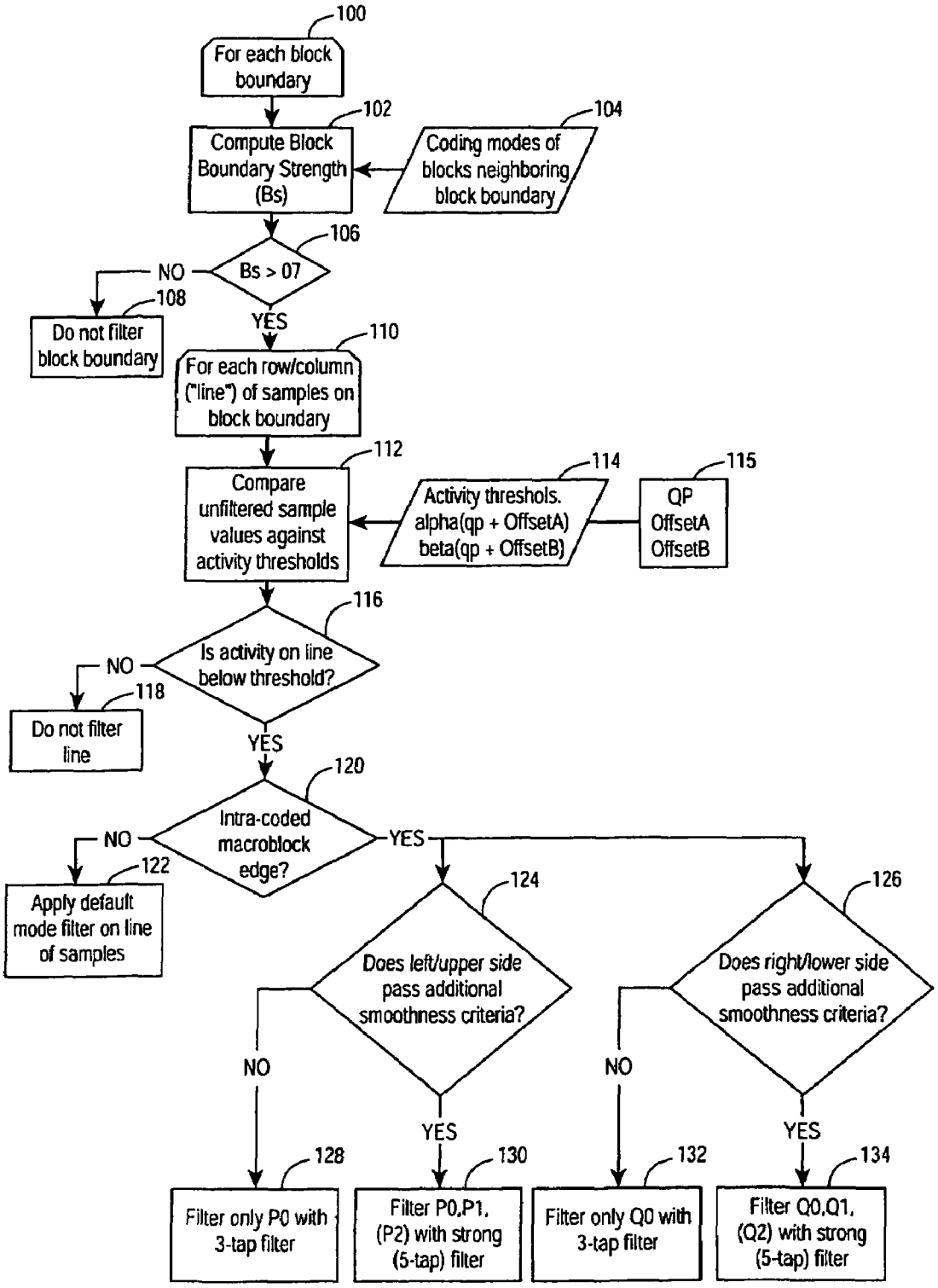
100
For each block boundary
102
Compute Block Boundary Strength (Bs)
104
Coding modes of blocks neighboring block boundary
106
Bs > 07
NO
108
Do not filter block boundary
YES
110
For each row/column ("line") of samples on block boundary
112
Compare unfiltered sample values against activity thresholds
114
Activity threshols. alpha(qp + OffsetA) beta(qp + OffsetB)
115
QP OffsetA OffsetB
116
Is activity on line below threshold?
NO
118
Do not filter line
YES
120
Intra-coded macroblock edge?
NO
122
Apply default mode filter on line of samples
YES
124
Does left/upper side pass additional smoothness criteria?
126
Does right/lower side pass additional smoothness criteria?
NO
YES
NO
YES
128
Filter only P0 with 3-tap filter
130
Filter P0,P1, (P2) with strong (5-tap) filter
132
Filter only Q0 with 3-tap filter
134
Filter Q0,Q1, (Q2) with strong (5-tap) filter

Figure 5

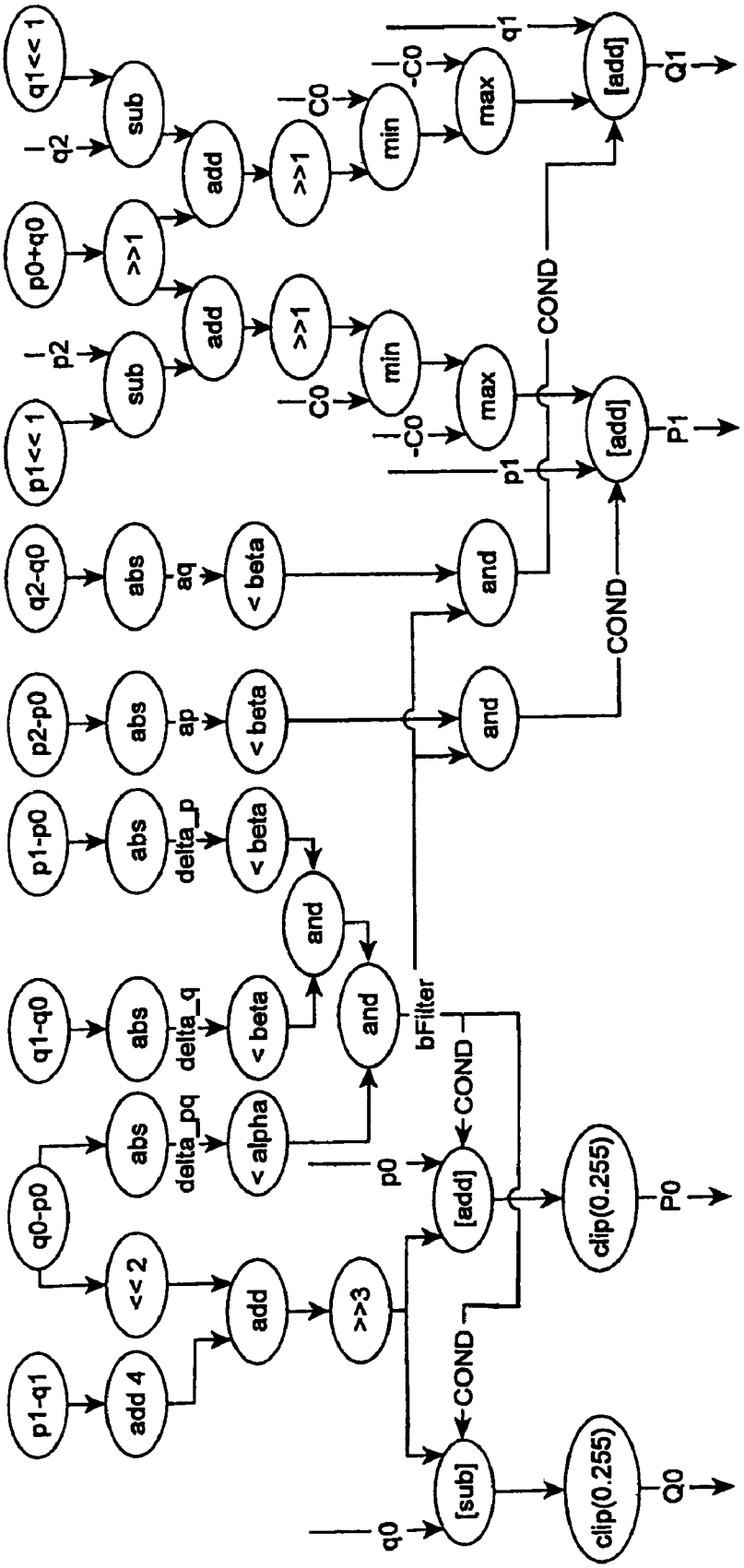
p1-q1
add 4
q0-p0
<< 2
add
>>3
q1-q0
abs
delta_pq
< alpha
delta_q
< beta
and
p1-p0
delta_p
p2-p0
ap
q2-q0
aq
bFilter
p0
[add]
COND
clip(0.255)
P0
q0
[sub]
Q0
p1<< 1
p2
sub
p0+q0
>>1
add
>>1
min
C0
-C0
max
q1<< 1
q2
Q1
q1
P1
p1

Figure 6

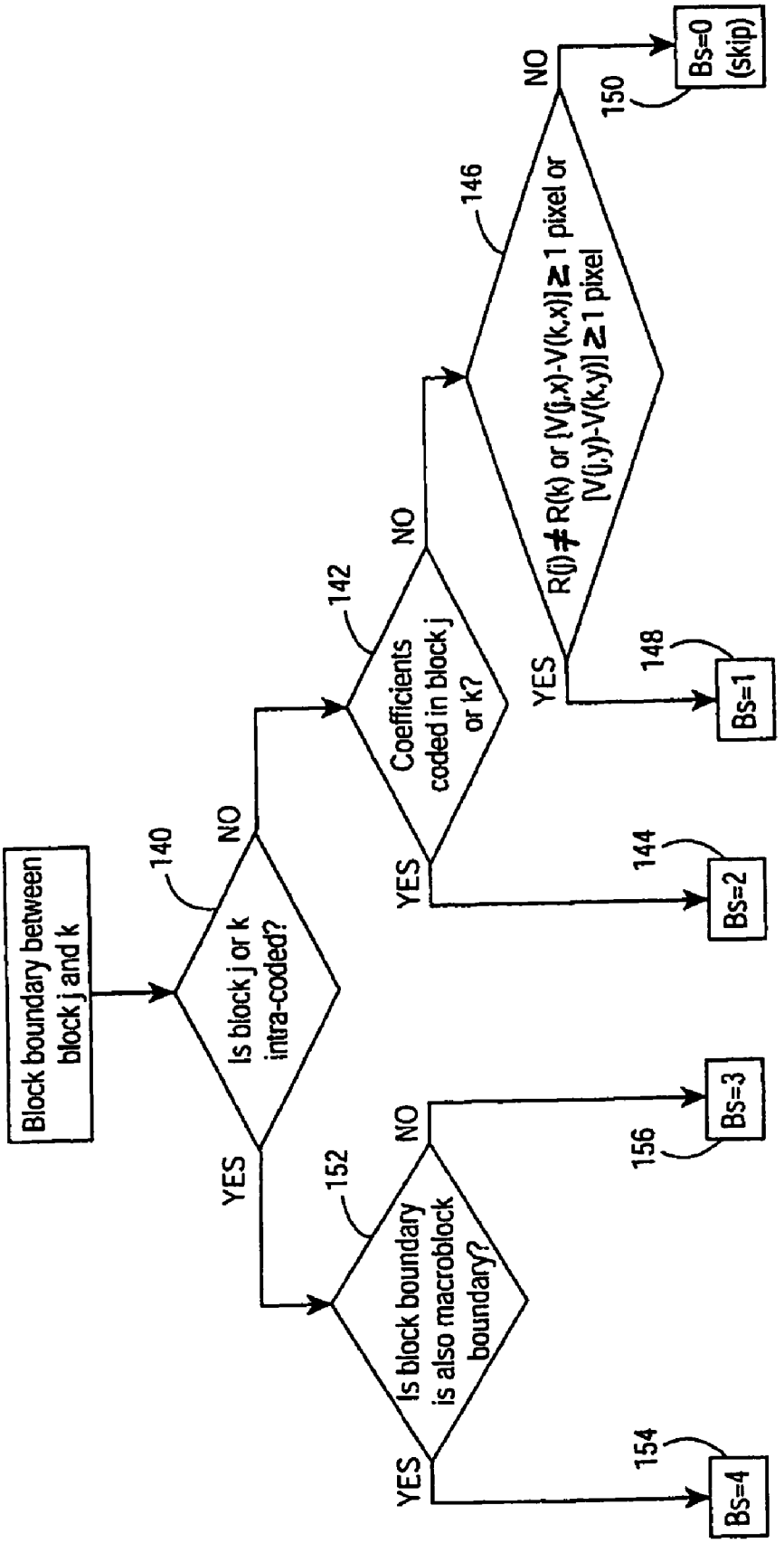
Block boundary between block j and k
140
Is block j or k intra-coded?
NO
YES
142
Coefficients coded in block j or k?
NO
YES
144
Bs=2
146
R(j)≠R(k) or [V(j,x)-V(k,x)]≥1 pixel or [V(j,y)-V(k,y)]≥1 pixel
NO
YES
148
Bs=1
150
Bs=0 (skip)
152
Is block boundary is also macroblock boundary?
NO
YES
156
Bs=3
154
Bs=4

Figure 7

LOW-COMPLEXITY DEBLOCKING FILTER

FIELD OF THE INVENTION

The present invention relates to the field of video coding, more particularly it relates to a method of reducing blocking artifacts inherent in hybrid block-based video coding.

BACKGROUND OF THE INVENTION

Video compression is used in many current and emerging products. It has found applications in video-conferencing, video streaming, serial storage media, high definition television (HDTV), and broadcast television. These applications benefit from video compression in the fact that they may require less storage space for archived video information, less bandwidth for the transmission of the video information from one point to another, or a combination of both.

Over the years, several standards for video compression have emerged, such as the Telecommunication Standardization Sector of the International Telecommunication Union (ITU-T) recommended video-coding standards: H.261, H.262, H.263 and the emerging H.264 standard and the International Standardization Organization and International Electrotechnical Commission (ISO/IEC) recommended standards MPEG-1, MPEG-2 and MPEG-4. These standards allow interoperability between systems designed by different manufacturers.

Video is composed of a stream of individual pictures (or frames) made up of discrete areas known as picture elements or pixels. The pixels are organised into lines for display on a CRT or the like. Each pixel is represented as a set of values corresponding to the intensity levels of the luminance and chrominance components of a particular area of the picture. Compression is based mainly on the recognition that much of the information in one frame is present in the next frame and, therefore, by providing a signal based on the changes from frame to frame a much reduced bandwidth is required. For the purpose of efficient coding of video, the pictures or frames can be partitioned into individual blocks of 16 by 16 luminance pixels called "macroblocks". This practice simplifies the processing which needs to be done at each stage of the algorithm by an encoder or decoded. To encode a macroblock (or sub-macroblock partition) using motion-compensated prediction, an estimation is made of the amount of motion that is present in the block relative to the decoded pixel data in one or more reference frames, usually recently decoded frames, and the appropriate manner in which to convey the information from which the current frame may be reconstructed. The residual signal, which is the difference between the original pixel data for the macroblock and its prediction, is spatially transformed and the resulting transform coefficients are quantized before being entropy coded. The basic processing blocks of an encoder are a motion estimator/compensator/predictor, a transform, a quantizer and an entropy coder. Due to the quantization of the transformed coefficients of the residual signal, the reconstructed pixel values are generally not identical to those of the original frame. Since the coding is block-based, the errors that are introduced by the quantization process tend to produce artifacts in the form of sharp transitions in image intensity across transform block boundaries in the reconstructed frame. Such artifacts are referred to as "blocking artifacts". The appearance of blocking significantly affects the natural smoothness seen in video images and leads to a degradation of the overall video image quality.

Blocking artifacts are inherent in hybrid block-based video coders, especially in low bit rate video applications. A number of solutions have been presented to alleviate the degradation in visual quality due to the presence of blocking artifacts. Two general approaches have been proposed to deal with blocking artifacts. The first approach is based on using a deblocking filter in the decoder only as a post-processing stage, and applying the deblocking filter on the decoded and reconstructed video frames before they are displayed. The purpose of the filter is to modify the sample values around the block boundaries in order to smooth unnatural sharp transitions that have been introduced by the block-based coding process. Having a deblocking filter applied outside of the motion-compensation loop can be viewed as an optional process for the decoder, placing no requirements on the video encoder. However, this scheme has a disadvantage in that the reference frames that are used for generating predictions for the coding of subsequent frames will contain blocking artifacts. This can lead to reduced coding efficiency and degraded visual quality. The second approach to reduce the visibility of blocking artifacts is to apply a deblocking filter inside the motion-compensation loop. In this case, the reference frames that are used for generating predictions for subsequent encoded frames represent filtered reconstructed frames, generally providing improved predictions and improved compression and visual quality. In order to create identical predictions at both the encoder and decoder, the deblocking filter (sometimes referred to as a "loop filter" if it is inside the motion-compensation loop) must be applied in both the encoder and the decoder.

In order to reduce the appearance of blocking artifacts, a number of video coding standards, including H.263 version 2, and most recently the emerging H.264 video coding standard specify the use of a deblocking filter inside the motion-compensation loop. In particular, the H.264 video coding standard fully specifies a deblocking filter that is to be used inside the motion-compensation loop in both the encoder and decoder.

One of the known prior art methods is described in a document "Working Draft Number 2, Revision 2 (WD-2)" by the Joint Video Team (JVT) of ISO/IEC MPEG and ITU-T VCEG. In this prior art method, filtering occurs on the edges of 4×4 blocks in both the luminance and chrominance components of each reconstructed video frame. The filtering takes place on one 16×16 macroblock at a time, with macroblocks processed in raster-scan order throughout the frame. Within each macroblock, vertical edges are filtered first from left to right, followed by filtering of the horizontal edges, from top to bottom. The filtering of samples for one line-based filtering operation occurs along the boundary separating unfiltered samples p_0, p_1, p_2, and p_3 on one side of the boundary, and unfiltered samples q_0, q_1, q_2, and q_3 on the other side, as illustrated in FIG. **3***a*. The block boundary lies between samples p_0 and q_0. In some cases p_1, p_2 may indicate samples that have been modified by filtering of a previous block edge. For each line-based filtering operation, unfiltered samples will be referred to with lower-case letters, and filtered samples with upper-case letters. For each block boundary segment (consisting of 4 rows or columns of samples), a "Boundary strength" parameter, referred to as "Bs", is computed before filtering. The calculation of Bs is based on parameters that are used in encoding the bounding blocks of each segment. Each segment is assigned a Bs value from zero to four, with a value

of zero indicating that no filtering will take place, and a value of 4 indicating that the strongest filtering mode will be used.

The process for determining Bs is as follows. For each boundary, a determination is made as to whether either one of the two blocks that neighbour the boundary is intra-coded. If either block is intra-coded, then a further determination is made as to whether the block boundary is also a macroblock boundary. If the block boundary is also a macroblock boundary, then Bs=4, else Bs=3.

Otherwise, if neither block is intra-coded then a further determination is made as to whether either block contains non-zero transform coefficients. If either block contains non-zero coefficients then Bs=2; otherwise if a prediction of the two blocks is formed using different reference frames or a different number of frames and if a pair of motion vectors from the two blocks reference the same frame and either component of this pair has a difference of more than one sample, then Bs=1; else Bs=0, in which case no filtering is performed on this boundary. The value of boundary strength, Bs, for a specific block boundary is determined by the encoding characteristics of the two 4×4 blocks along the boundary. Therefore, the control of the filtering process for each individual block boundary is well localized. The block boundary is filtered only when it is necessary, based on whether the coding modes used for the neighbouring blocks are likely to produce a visible blocking artifact.

The known filtering process starts with the step of filtering each 4×4 block edge in a reconstructed macroblock. The filtering "Boundary strength" parameter, Bs, is computed and assigned based on the coding parameters used for luma. Block boundaries of chroma blocks correspond to block boundaries of luma blocks, therefore, the corresponding Bs for luma is also used for chroma boundaries.

Filtering takes place in the order described above on all boundary segments with non-zero value for Bs. The following describes the process that takes place for each line-based filtering operation.

rounding of the average by truncation of any fractional part. Accordingly, the content activity check is passed if

$$|p_0-q_0|<\text{ALPHA } (\alpha) \text{ AND } |p_1-p_0|<\text{BETA } (\beta) \text{ AND } |q_1-q_0|<\text{BETA } (\beta).$$

Further, if this first content activity check is passed, and Bs is not equal to 4, default mode filtering is performed. Otherwise, if the check is passed and Bs is equal to 4, a second, stricter activity check is performed. This activity check involves the evaluation of the condition

$$1<|p_0-q_0|<(QP_{av}>>2) \text{ AND } |p_2-p_0|<\text{BETA } (\beta) \text{ AND } |q_2-q_0|<\text{BETA } (\beta).$$

If this second condition is true on a particular line of samples, a strong mode filtering is used on this line of samples. Otherwise, a default mode filtering is used on this line of samples. It should be noted the symbol ">>" is used to represent the operation of bit-wise shifting to the right.

Among the disadvantages of the above described known method is that it permits switching between two filtering modes with very different characteristics at the level of each line of samples within a boundary segment. This switching adds complexity to the filtering process and can significantly increase the worst-case critical path for processing on many architectures.

Further disadvantages include the particular values in the tables of filtering parameters, ALPHA (α) and BETA (β), which are not optimized to produce the best subjective viewing quality of reconstructed and filtered video. Further, the characteristics of the deblocking filter in terms of the threshold parameters used in the activity checks and equations used for generating filtered sample values are fixed in the known method, providing the encoder with little or no flexibility to control the properties of the deblocking filter. This hinders optimization of the subjective quality of the decoded video for different types of video content and displays.

TABLE 1

QP_{av} dependent activity threshold parameters α and β

	QP_{av}																										
	0	1	2	3	4	5	6	7	8	9	10	11	12	13	14	15	16	17	18	19	20	21	22	23	24	25	26	27
α	0	0	0	0	0	0	0	0	0	0	0	0	0	0	0	0	0	0	0	0	4	4	5	6	7	9	10	12
β	0	0	0	0	0	0	0	0	0	0	0	0	0	0	0	0	0	0	0	0	3	3	3	4	4	4	6	6

	QP_{av}																							
	28	29	30	31	32	33	34	35	36	37	38	39	40	41	42	43	44	45	46	47	48	49	50	51
α	14	17	20	24	28	33	39	46	55	65	76	90	106	126	148	175	207	245	255	255	255	255	255	255
β	7	7	8	8	9	9	10	10	11	11	12	12	13	13	14	14	15	15	16	16	17	17	18	18

A content activity check is performed. If the check is passed, filtering continues; otherwise, the sample values are not modified on this line of the boundary segment. The activity check makes use of a pair of activity threshold parameters, ALPHA (α) and BETA (β), whose particular values are selected from the above Table 1, based on the average quantization parameter (QP_{av}) used in coding each boundary segment. It is noted that QP_{av} represents the average value of the quantization parameter values used in encoding the two blocks that neighbour the boundary, with

In the default mode of the above identified filtering method, the value Δ, which represents the change from the unfiltered values of p_0 and q_0 to their respective filtered values is computed using:

$$\Delta=\text{Clip}(-C, C, (((q_0-p_0)<<2+(p_1-q_1)+4)>>3)),$$

where C is determined as specified below and the function "Clip" is defined as:

Clip(a, b, c)=IF (c<a) THEN a
ELSE IF (c>b) THEN b
ELSE c

Further, the filtered values P_0 and Q_0 are computed where

$$P_0=\text{Clip}(0, 255, p_0+\Delta) \text{ and } Q_0=\text{Clip}(0, 255, q_0-\Delta).$$

In order to compute the clipping value, C, that is used to determine Δ, and also determine whether the values of p_1 and q_1 will be modified on this set of samples, two intermediate variables, a_p and a_q are computed, where:

$$\alpha_p=|p_2-p_0| \text{ and } \alpha_q=|q_2-q_0|.$$

If $\alpha_p<\beta$ for a luminance edge, a filtered sample P_1 is produced as specified by:

$$P_1=p_1+\text{Clip}(-C0, C0, (p_2+P_0-(p_1<<1))>>1).$$

If $\alpha_q<\beta$ for a luminance edge, a filtered sample Q_1 is produced as specified by $Q_1=q_1+\text{Clip}(-C0, C0, (q_2+Q_0-(q_1<<1))>>1)$ where C0 is specified in Table 2 (see below), based on Bs and QP_{av}, for the block boundary. For both luma and chroma, C is determined by setting it equal to C0 and then incrementing it by one if $\alpha_p<\beta$, and again by one if $\alpha_q<\beta$.

TABLE 2

Value of filter clipping parameter C0 as a function of QP_{av} and Bs

	QP_{av}																								
	0	1	2	3	4	5	6	7	8	9	10	11	12	13	14	15	16	17	18	19	20	21	22	23	24	25
Bs = 1	0	0	0	0	0	0	0	0	0	0	0	0	0	0	0	0	0	0	0	0	0	0	0	1	1	1
Bs = 2	0	0	0	0	0	0	0	0	0	0	0	0	0	0	0	0	0	0	0	0	0	1	1	1	1	1
Bs = 3	0	0	0	0	0	0	0	0	0	0	0	0	0	0	0	0	0	1	1	1	1	1	1	1	1	1

	QP_{av}																									
	26	27	28	29	30	31	32	33	34	35	36	37	38	39	40	41	42	43	44	45	46	47	48	49	50	51
Bs = 1	1	1	1	1	1	1	1	2	2	2	2	3	3	3	4	4	4	5	6	6	7	8	9	10	11	13
Bs = 2	1	1	1	1	1	2	2	2	2	3	3	3	4	4	5	5	6	7	8	8	10	11	12	13	15	17
Bs = 3	1	2	2	2	2	3	3	3	4	4	4	5	6	6	7	8	9	10	11	13	14	16	18	20	23	25

It is important to note that the computation of the filtered values P_1 and Q_1 require as an input to the filtering equation the filtered values of P_0 and Q_0 from the current line of samples. This recursive filtering method presents a disadvantage as the values of P_0 and Q_0 must be computed before the computation of P_0 and Q_1 can begin. This design can impede parallel processing of the different samples and thereby increases the critical path for the default mode filtering on most hardware architectures.

An additional disadvantage in the default mode filtering process of the known method is that the calculation of the clipping parameter, C, for chroma samples is unnecessarily complex. The chroma samples p_1 and q_1 are never filtered in the default mode and, therefore, the computation of the variables a_p and a_q is only necessary to determine the C parameter that is used to clip the value of Δ. These computations could be avoided by specifying a simpler method to compute C for chroma filtering.

For strong mode filtering in the known method, the following equations are applied to calculate the filtered sample values:

$$P_0=(p_2+2*p_1+2*p_0+2*q_0+q_1+4)>>3,$$

$$P_1=(p_3+2*p_2+2*p_1+2*p_0+q_0+4)>>3,$$

$$Q_0=(p_1+2*p_0+2*q_0+2*q_1+q_2+4)>>3 \text{ and}$$

$$Q_1=(p_0+2*q_0+2*q_1+2*q_2+q_3+4)>>3.$$

For the luminance component only, p_2 and q_2 are also filtered as specified by:

$$P_2=(2*p_3+3*p_2+p_1+p_0+q_0+4)>>3 \text{ and}$$

$$Q_2=(2*q_3+3*q_2+q_1+q_0+p_0+4)>>3.$$

Filtering with this set of equations can lead to insufficient reduction in the visibility of blocking artifacts. It is therefore an object of the present invention to obviate or mitigate the above-mentioned disadvantages.

SUMMARY OF THE INVENTION

In accordance with one aspect of the present invention there is provided a method of filtering samples to minimise coding artifacts introduced at a block boundary in a block-based video encoder, the method having the steps of:

(a) checking content activity on every line of samples across said block boundary;

(b) determining whether the filtering process will modify the sample values on the line of samples based on content activity thresholds, said content activity thresholds being dependent on an average quantization parameter and a selected filter offset parameter,

(c) determining whether a block on either side of the block boundary was coded using either intra or inter prediction;

(d) providing a pair of filter modes,

i) the first filter mode, a strong filtering mode consisting of a selection of a 3-tap filter sub-mode and an alternative 5-tap filter sub-mode with the selection between these two sub-modes made separately on each side of the block boundary based on the sample values on each line of samples across said block boundary,

ii) the second filter mode, a non-recursive default filtering mode; and

(e) selecting one of the pair of filter modes for filtering the samples.

The determination of whether the filtering process will modify the sample values on each particular line is based on a content activity check which makes use of a set of adaptively selected thresholds whose values are determined using Variable-Shift Table Indexing (VSTI).

In another aspect of the invention there is provided a method of controlling a filter's properties to adjust the properties of said filter at a block boundary, said method having the steps of:

(a) computing average quantization parameter value (QP_{av}) at said block boundary;

(b) adding offset values Filter_Offset_A and Filter_Offset_B to the average quantization parameter value QP_{av} and clipping these values within a given range to determine the tables indices $Index_A$ and $Index_B$; and

(c) accessing said ALPHA (α) table, said BETA (β) table and said Clipping (C0) table using these indices computed based on the filter offsets and the average quantization parameter value such that:

ALPHA=ALPHA_TABLE[$Index_A$]

BETA=BETA_TABLE [$Index_B$]

C0=CLIP_TABLE[Bs] [$Index_A$.]

In a still further aspect of the invention there is provided a method of filtering samples to minimise coding artifacts introduced at a block boundary in a block-based video encoder, the method having the steps of checking content activity on every line of samples belonging to the boundary to be filtered and determining whether the filtering process will modify the sample values on said line of samples based on content activity thresholds that are dependent on a quantization parameter and determined using a filter offset parameter.

In a still further aspect of the present invention there is provided a method of filtering samples to minimise coding artifacts introduced at a block boundary in a block-based video encoder, the method having the steps of: determining whether line samples adjacent to a boundary to be filtered are intra-coded; and employing a non-recursive default filtering mode for samples in the proximity of said block boundary that is within a macroblock; a series of filtered output samples being calculated solely from unfiltered input sample values.

In a still further aspect of the present invention there is provided a method of filtering samples to minimise coding artifacts introduced at a block boundary in a block-based video encoder for a line of samples to be filtered across a block boundary that is also a macroblock boundary, where at least one side of the boundary is intra coded, the method having the step of: selecting a strong filtering sub-mode for either side of said block boundary between at least two strong filtering sub-modes, a 3-tap filter sub-mode and an alternative 5-tap filter sub-mode, with the selection between these two sub-modes based on the sample values on each line of samples across the boundary.

BRIEF DESCRIPTION OF THE DRAWINGS

These and other features of the preferred embodiments of the invention will become more apparent in the following detailed description in which reference is made to the appended drawings wherein:

FIG. **1** is a schematic representation of a data transmission system;

FIG. **2** is a schematic representation of hierarchy of levels of an H.264 conformant bitstream;

FIG. **3***a* is schematic representation of a macroblock and a block;

FIG. **3***b* is a diagram showing relationship between unfiltered samples and activity thresholds;

FIG. **4** is a block diagram of a hybrid block-based video decoder including a deblocking filter inside the motion compensation loop of the system of FIG. **1**;

FIG. **5** is a flowchart of the operation of the deblocking filter process for the decoder of FIG. **4**;

FIG. **6** is the dependency graph for default mode filter for the decoder of FIG. **4**; and

FIG. **7** is flowchart for the process of calculating the boundary strength for the decoder of FIG. **4**.

DESCRIPTION OF THE PREFERRED EMBODIMENTS

Referring to FIG. **1**, a video conferencing system **10** used as an example of a video transmission system has participants A and B that exchange video data **12** between monitors **13**, formatted as a compressed bit stream **15** over a network **14** (such as but not limited to the Internet). Each participant A, B has a video processor **16** having an encoder **18** for encoding transmitted video data **12** and a decoder **20** for decoding the received bit stream **15**. Each image frame **22** displayed on the monitors **13** is made of a series of macroblocks **24**, such as but not limited to a block of 16×16 pixels, representing (for example) an object **26** which moves over a background **28** (for example a person giving a presentation while standing in front of a backdrop). Accordingly, the processors **16** coordinate the display of successive frames **22** on the monitors **13**, as the video data **12** is communicated between the participants A, B, which can include applications such as video conferencing. It will be appreciated recognised that the system **10** may also involve the exchange of video data **12** in the compressed bit stream **15** in either one direction or both and on peer-to-peer basis or broadcast.

The video data **12** is a temporal sequence of pictures, each referred to as a frame or field **22**. Each picture **22** is organized as a matrix of macroblocks **24**. Each macroblock **24** has a size of 16 by 16 pixels and the macroblocks **24** are stored from left to right and from top to bottom and groups of macroblocks **24** are combined in a slice **32** (see FIG. **2**). Generally, a slice **32** contains macroblocks **24** and each macroblock **24** consists of blocks **25** (see FIG. **3**). Generally, each macroblock **24** is composed of three images; one red (R), one green (G), and one blue (B). However, for compatibility with non-coloured media, the RGB model is represented as an equivalent YCbCr model, where Y is a luminance (luma) component, and Cb and Cr are chrominance (chroma) components, such that typically Y=0.299R+0.587G+0.114B, Cb=B−Y, and Cr=R−Y. Therefore, each frame **22** of the video data **12** is generically referred to as containing one luma image, one Cb chroma image, and one Cr chroma image. Standard formats have 8 bits per pixel to digitally represent each of the three components, where Cb and Cr images are typically downsampled by 2 in each dimension due to the sensitivity of human vision. Generally, each block **25** consists of four pixels for the luma components and one pixel for each chroma component of the 4:2:0 color data. The blocks **25** are processed and compressed for transmission as the bit stream **15** over the network **14** (see FIG. **1**).

Generally, one of three fundamental coding modes can be selected for each macroblock **24**, with the choice of coding mode determining how the prediction of a macroblock **24** is formed. Intra-coded (I) macroblocks **24** make use of intra-prediction, in which the prediction is formed using only the current picture. In predictive (P), or inter-coded, macroblocks **24** the prediction of each sample is formed by referring to one block **25** in the set of previously decoded and stored reference pictures **22**. In bi-predictive (B) macroblocks **24**, predictions can be formed in this way, but can also be formed by computing a weighted average of two different blocks **25** in the set of previously decoded reference pictures **22**. It will be noted that some of the previously decoded pictures **22** are typically temporally subsequent to the cur-

rent picture in terms of their intended display order when bi-predictive coding is used. Depending on the mode of each slice **32**, which is indicated in the slice header **27**, P- and B-macroblocks **24** may not be permitted within certain slices **32**.

Referring again to FIG. **2**, the bitstream **15** is organized into a hierarchy of syntax levels, with the 3 main levels being a sequence level **17**, a picture (or frame) level **19**, and slice level **21**. A concept know as "parameter sets" allows efficient transmission of infrequently changing data at the sequence **17** and picture level **19** in the H.264 standard. A sequence parameter set **29** in the first level **17** includes values of parameters that will remain unchanged for an entire video sequence, or from one instantaneous decoder refresh (IDR) picture to the next. (IDR pictures are used to provide points of random access into the bitstream). Examples of parameters in a sequence parameter set **29** include frame dimensions and the maximum number of reference frames. A unique ID number "N" identifies each sequence parameter set **29**.

A picture parameter set **31** in the second level **21** includes values of parameters that will remain unchanged within a coded representation of a picture (frame or field) **22**. Examples of parameters in the picture parameter set **31** include the entropy coding mode and a flag that specifies whether deblocking filter parameters will be transmitted in the slice headers **27** of the picture **22** (see FIG. **1**). Each picture parameter set **31**, labeled as "M", refers to the unique ID of a valid sequence parameter set **29**, which selects the active sequence parameters that are used when decoding coded pictures **22** that use the particular picture parameter set **31**. The unique ID number "M" identifies each picture parameter set **31**.

A slice **32** in the bit stream **15** contains a picture data **35** representing a sub-set of the macroblocks **24** of the complete picture **22**. The macroblocks **24** in a slice **32** are ordered contiguously in raster scan order. The coded slice **32** includes the slice header **27** and the slice data **35** (coded macroblocks **24**). The slice header **27** contains a coded representation of data elements **35** that pertain to the decoding of the slice data that follow the slice header **27**. One of these data elements contains a reference to a valid picture parameter set **31**, which specifies the picture parameter values (and indirectly the sequence parameter values) to be used when decoding the slice data **35**. Each slice header **27** within the same picture **22** must refer to the same picture parameter set **31**. Other data elements in the slice header **27** include the initial quantization parameter for the first macroblock **24** in the slice **32** and deblocking filter offset parameters **39** (as further explained below), if the transmission of such offset parameters **39** is specified in the active picture parameter set.

Thus, the filter offsets **39** are transmitted in the slice header **27**, and therefore the offsets **39** can be different for each slice **32** within the picture **22**. However, depending on the value of a flag in the picture parameter set **31** ("filter_parameters_flag"), the transmission of these offsets **39** in the slice header **27** might be disabled. In the case that offsets **39** are not transmitted, a default value of zero is used for both filter offsets **39** for example. Further, each picture parameter set **31** contains parameter values that pertain to the decoding of the pictures **22** for which the particular parameter set **31** is active (i.e. selected in the slice headers **27** of the picture **22**). The parameter sets **31** also contain a reference to the sequence parameter sets **29**, which are active for decoding of the pictures **22**. The choice of sequence parameter sets **29** and picture parameter sets **31** can be chosen by the encoder **18** (see FIG. **1**), or set at the time of system **10** setup for sequential operation of the encoder **18**, decoder **20** pair.

Referring further to FIG. **2**, each of the pictures **22** can select individual picture parameter sets that specify the picture structure and the picture coding type. For exemplary purposes only, FIG. **3***a* contains the macroblock **24** each consisting of a grouping of pixels, such as a 16×16 luma block **25** with the two associated 8×8 chroma blocks **25**. However, it is recognized that other sizes of blocks **24** could be used to represent the frames **22**, if desired. Each slice **32** of the frame **22** is encoded by the encoder **18** (see FIG. **1**), independently from the other slices **32** in the frame **22**. Each of the slices **32** has the slice header **27** that provides information, such as but not limited to the position of the respective slice **32** in the frame **22** as well as the initial quantization parameter; and the slice data which provides information for reconstructing the macroblocks **24** of a slice **32**, such as but not limited to the prediction modes and quantised coefficients for each of the respective macroblocks **24**.

Referring to FIG. **4**, the decoder **20** processes the received bit stream **15** and then reconstructs the predicted frame **46**, using a stored copy of the reference frame(s) **48**, the transmitted motion vectors **23**, and the decompressed or reassembled prediction error **54** contained in the bit stream **15**.

The bit stream **15** generated by the encoder **18** is processed by the decoder **20** to produce the reconstructed video images **55**. Referring to FIG. **4**, the video decoder **20** is based on functional units or components similar to those found in other hybrid block-based video decoders. The functional units include a buffering unit **33** that receives the compressed bitstream **15**, an entropy decoder **34** which decodes the received bit stream **15** to produce syntax elements used in subsequent processing by the other decoder **20** components, a motion compensated prediction **36** to produce the predicted frame, an inverse scanning and quantization unit **38**, and inverse transform units **40** to reproduce the coded prediction error **54**. A reconstruction unit **42** adds the prediction error **54** to the predicted pixels **57** to produce the reconstructed frame **56**, and a deblocking filter **44** that smoothes the edges of sub-blocks within the reconstructed frame **56** to produce the filtered reconstructed frame **56**. Each of the above mentioned components is discussed in more detail in the following.

The incoming video bitstream **15** is stored in a buffer **33** at the input to the decoder **20**. The first stage in the decoding process includes the parsing and decoding of the entropy coded bitstream symbols that are stored in a buffer **46** to produce the syntax elements used by the other decoder **20** components.

The various syntax elements in the bitstream **15** are de-multiplexed for use in different processes within the decoder **20**. High-level syntax elements include temporal information for each frame, frame coding types and frame dimensions. The coding can be based primarily on macroblocks **24** consisting of 16×16 luminance-pixel blocks **25** and 2 8×8 chrominance pixel blocks **25**. On the macroblock **24** level, syntax elements include the coding mode of the macroblock **24**, information required for forming the prediction, such as motion vectors **23** and spatial prediction modes, and the coded information of the residual (difference) blocks, such as the coded block pattern (CBP) for each macroblock **24** and quantized transform coefficients for each of the underlying blocks **24**.

Depending on the coding mode of each macroblock **24**, the predicted macroblock **24** can be generated either temporally (inter prediction) or spatially (intra prediction). The prediction for an inter-coded macroblock **24** is specified by the motion vectors **23** that are associated with that macroblock **24**. The motion vectors **23** indicate the position within the set of previously decoded frames from which each block of pixels will be predicted. Each inter-coded macroblock **24** can be partitioned in a number of different ways, using blocks of seven different sizes, with luminance block sizes ranging from 16×16 pixels to 4×4 pixels. Also, a special SKIP mode exists in which no motion vector difference values **23** (or coded residual blocks) are transmitted and the prediction is taken from a location in the previous picture that is predicted by the values of previously decoded motion vectors **23** of macroblocks **24** neighbouring the current macroblock **24**. Thus, 0 to 16 motion vectors **23** can be transmitted for each inter-coded macroblock **24**. Additional predictive modes in which two different motion vectors **23** correspond to each pixel and the sample values are computed using a weighted average are supported when bi-predictive macroblock types are employed.

For each motion vector **23**, a predicted block **25** must be computed by the decoder **20** and then arranged with other blocks **24** to form the predicted macroblock **24**. Motion vectors **23** in H.264 are specified generally with quarter-pixel accuracy. Interpolation of the reference video frames is necessary to determine the predicted macroblock **24** using sub-pixel accurate motion vectors **23**.

Multiple (previous for P-pictures) reference pictures **22** can also be used for motion-compensated prediction. Selection of a particular reference pictures **22** is made on an 8×8 sub-macroblock **24** basis, or larger if a larger sub-macroblock partition size is used for generating the motion-compensated prediction. This feature can improve coding efficiency by providing a larger set of options from which to generate a prediction signal.

Two different modes are supported in intra prediction and coding of macroblocks **24**. In the 4×4 Intra mode, each 4×4 block within a macroblock **24** can use a different prediction mode. In the 16×16 Intra mode, a single prediction mode is used for the entire macroblock **24**. The prediction of intra-coded blocks **25** is always based on neighboring pixel values that have already been decoded and reconstructed.

The decoding of a residual (difference) macroblock **24** requires that a number of transforms be performed on any blocks for which non-zero transform coefficients were transmitted in the bitstream, along with associated scanning and coefficient scaling operations. The transforms that are required for each macroblock **24** are determined based on the coding mode and the coded block pattern (CBP) of the macroblock **24**. The decoding of a difference macroblock **24** is based primarily on the transformation of 4×4 blocks **25** of both the luminance and chrominance pixels, although in some circumstances, a second-level transform must be performed on the DC coefficients of a group of 4×4 blocks **25** for macroblocks **24** that are coded in the 16×16 Intra prediction mode. Additionally, a special 2×2 transform is applied to the 4 DC coefficients of the chrominance residual blocks **25** of a macroblock **24**.

The values of the quantized coefficients are parsed and decoded by the entropy decoder **34**. These are put into their correct order based on the run values through the scanning process and then the levels, which represent quantized transform coefficients, are scaled via multiplication by a scaling factor. Finally, the necessary transform to reconstruct the coded residual signal for a block is performed on the scaled coefficients. The result of the transforms for each macroblock **24** is added to the predicted macroblock **24** and stored in the reconstructed frame buffer **48**.

In the final stage of the decoding process, the decoder **20** applies the normative de-blocking filtering process, which reduces blocking artifacts that are introduced by the coding process. The filter **44** is applied within the motion compensation loop, so both the encoder **18** and decoder **20** must perform this filtering. The filtering is performed on the 4×4 block edges of both luminance and chrominance components. The type of filter **44** used, the length of the filter and its strength are dependent on several coding parameters as well as picture content on both sides of each edge. A stronger filtering mode is used if the edge lies on a macroblock boundary **49** where the block on one or both sides of the edge is coded using intra prediction. The length of the filtering is also determined by the sample values over the edge, which determine the so-called "activity measures". These activity measures determine whether 0, 1, or 2 samples on either side of the edge are modified by the filter.

Filtering is applied across the 4×4 block edges of both luminance and chrominance components. Looking at FIG. **3***a*, the blocks **25** are separated by boundaries or block edges **47**, with unfiltered samples p_0, p_1, p_2 and p_3 on one side of the boundary **47** and unfiltered samples q_0, q_1, q_2 and q_3 on the other side, such that the boundary **47** lies between p_0 and q_1. In some cases p_1, p_2 may indicate samples that have been modified by filtering of the previous block edge **47**. The deblocking filter **44** (see FIG. **4**) is applied on the block boundaries **47** of each reconstructed frame **56**, which helps to reduce the visibility of coding artifacts that can be introduced at those block boundaries **49**. The filter **44** includes a control function that determines the appropriate filtering to apply. The control algorithm is illustrated by FIG. **5**.

One of the parameters used to control the filtering process of all the block boundaries **47** is the boundary strength, Bs. The procedure for determining the boundary strength, Bs, for the block boundary **47** between two neighbouring blocks j and k is illustrated in FIG. **7**. For each edge **47**, a determination is made as to whether either one of the two blocks j and k across the boundary **47** is intra-coded, in step **140**. If either block j or k is intra-coded then a further determination is made as to whether the block boundary **47** is also a macroblock boundary **49**, in step **152**. If the block boundary **47** is also a macroblock boundary **49**, then Bs=4 (step **154**), else Bs=3 (step **156**).

Otherwise, if neither block j or k is intra-coded then a further determination is made as to whether either block **25** contains non-zero coefficients, in step **142**. If either block **25** contains non-zero coefficients then

Bs=2 (step **144**), otherwise the following condition is applied:

$R(j) \neq R(k)$ or $|V(j,x)-V(k,x)| \geqq 1$ pixel or $|V(j,y)-V(k,y)| \geqq 1$ pixel, where R(j) is the reference picture **22** used for predicting block j, and V(j) is the motion vector **23** used for predicting block j, consisting of x and y (horizontal and vertical) components. Therefore, if a prediction of the two blocks **25** is formed using different reference frames **22** or a different number of frames **22** or if a pair of motion vectors **23** from the two blocks **25** reference the same frame and either component of this pair has a difference if more than one sample distance, then this condition holds true and

Bs=1 (step **148**);

else,

Bs=0 (step **150**), in which case no filtering is performed.

The value of boundary strength, Bs, for a specific block boundary **47** is determined solely by characteristics of the two 4×4 blocks **24** across the boundary **47**. Therefore, the control of the filtering process for each individual block boundary **47** is well localized. A block boundary **47** is filtered only when it is necessary, so that unneeded computation and blurring can be effectively avoided.

The flowchart of FIG. **5** describes the filtering process starting with step **100** for the purposes of filtering each 4×4 block edge **47** in a reconstructed macroblock **24**. The filtering "Boundary strength" parameter, Bs, is computed (**102**) and assigned for luma. Block boundaries **47** of chroma blocks **25** always correspond to block-boundaries **47** of luma blocks **25**, therefore, the corresponding Bs for luma is also used for chroma boundaries **47**. The boundary strength is based on the parameters that are used in encoding the bounding blocks **25** of each segment (**104**). Each segment is assigned a Bs value from 0 to 4, with a value of zero indicating that no filtering will take place (**108**), and a value of 4 indicating that the strongest filtering mode will be used.

In step **110**, the filtering process takes place for each line of samples on the block boundary **47**. The set of filtering operations that take place on one line of a block boundary is referred to as a line-based filtering operation. A content activity check at the boundary **47** between the two blocks **25** is performed in step **112**. The content activity measure is derived from the absolute value of the separation between sample values of p_0, p_1, q_0, q_1 on either side of the boundary **47**. The activity check is based on two activity threshold parameters ALPHA (α) and BETA (β), whose particular values are selected based on the average quantization parameter (QP_{av}) used in coding each boundary segment, as well as upon a pair of encoder **18** selected parameter values, referred to as Filter_Offset_A and Filter_Offset_B (referred to as **39** in FIG. **2**). QP_{av} represents the average of the quantization parameter values used in coding the two blocks **25** that neighbour the boundary **47**, with rounding of the average by truncation of any fractional part. Thus, the content activity check is done by comparing difference in the unfiltered sample values p_0 and q_0 across the boundary **47** against the activity threshold ALPHA (α), and the difference in the unfiltered sample values p_0 and p_1 on one side of the boundary **47** and unfiltered sample values q_0 and q_1 on the other side of the boundary **47** against the activity threshold and BETA (β), as shown in FIG. **3***b*. A determination is made to discover whether the activity on the line is above or below the activity threshold. If the activity is above the threshold, the sample values are not modified, otherwise filtering continues. The ALPHA (α) and BETA (β) values are considered as activity thresholds for the difference in magnitude between sample values along the line of samples being filtered.

Referring to FIG. **3**, the ALPHA (α) and BETA (β) parameters represent the activity thresholds for the difference in the values of unfiltered samples p_0, p_1, q_0, q_1 across the boundary **47**. The content activity check is passed if:

$$|p_0-q_0|<\text{ALPHA }(\alpha)\text{ AND }|p_1-p_0|<\text{BETA }(\beta)\text{ AND }|q_1-q_0|<\text{BETA }(\beta)$$

The sets of samples p_0, p_1, q_0, q_1 across this edge **46** are only filtered if Bs is not equal to zero and the content activity check expressed in the above condition is passed.

The values in the ALPHA (α)- and BETA (β)-tables used in the loop filter are optimal in terms of the resulting video visual quality and allow some flexibility in the encoder **18** in terms of adjusting the filter parameters, such as the activity threshold parameters and maximum change in a sample value produced by the default filter, through control of the indexing of these tables. The strength of the deblocking filter **44** refers to the magnitude of the change in sample intensities that is caused by the filtering process. Generally, the strength of the filter **44** varies with the coding mode, as well as the step-size used for quantization of the transform coefficients. Stronger filtering is applied when the quantization step-size (and its corresponding "quantization parameter", QP) are larger, since it is more likely that large block artifacts are created when the quantization is coarse. Thus, flexibility in the properties of the loop filter **44** is provided by allowing the encoder **18** to select offsets **39** to the QP-based indices used to address these tables. This adds flexibility to the filter **44**, help making it more robust to different content, resolutions, display types, and other encoder **18** decision characteristics.

The α- and β-tables of the loop filter **44** are QP-dependent thresholds that define the maximum amount of activity at an edge for which the edge will still be filtered. The modified α-table of the preferred embodiment is based on the subjective evaluation of a number of sequences over the entire QP scale. In the preferred embodiment, the value of α doubles every 6 QP as it is related directly to the quantization step size, which also doubles every 6 QP in the H.264 standard.

A determination is made to find the QP value below which a should be zero, such that the filter is no longer used for values of a which equal zero. Looking at Table 1, in sequences with smooth areas, blocking artifacts are clearly visible using QP=19, which is the largest QP for which α is equal to zero. Based on Table 3, filtering will take place for QP values as low as 16, since blocking artifacts are still visible in smooth areas. The β-table is also extended at the low QP end in order to permit filtering at these lower QP values.

The content activity check (**112**) determines whether each sample line is to be filtered and uses the following specific values for α and β (**114**) as shown in Table 3 below, where the index used to access the tables is clipped to be within the range of valid QP values (0 to 51).

TABLE 3

	$Index_A$ (for α) or $Index_B$ (for β)																										
	0	1	2	3	4	5	6	7	8	9	10	11	12	13	14	15	16	17	18	19	20	21	22	23	24	25	26	27
α	0	0	0	0	0	0	0	0	0	0	0	0	0	0	0	0	4	4	5	6	7	8	9	10	12	13	15	17
β	0	0	0	0	0	0	0	0	0	0	0	0	0	0	0	0	2	2	2	3	3	3	3	4	4	4	6	6

	$Index_A$ (for α) or $Index_B$ (for β)																							
	28	29	30	31	32	33	34	35	36	37	38	39	40	41	42	43	44	45	46	47	48	49	50	51
α	20	22	25	28	32	36	40	45	50	56	63	71	80	90	101	113	127	144	162	182	203	226	255	255
β	7	7	8	8	9	9	10	10	11	11	12	12	13	13	14	14	15	15	16	16	17	17	18	18

Further, the particular values for α and β to be used on each block boundary **47** do not only depend on QP, but additionally upon a pair of parameter values, referred to as Filter_Offset_A and Filter_Offset_B, (referenced 39 in FIG. **2**) that are transmitted in the higher-level syntax (sequence **17**, picture **19**, or preferably the slice level **21**) within the video bitstream **15**. These offsets **39** are added to the average QP value between the blocks **24** in order to calculate the indices that are used to access the tables of ALPHA (α) and BETA (β) values (**114**), as well as the C0 table:

$$\text{Index}_A=\text{Clip}(QP_{min}, QP_{max}, QP_{av}+\text{Filter\_Offset\_}A)$$

$$\text{Index}_B=\text{Clip}(QP_{min}, QP_{max}, QP_{av}+\text{Filter\_Offset\_}B)$$

The variables QP_{min} and QP_{max}, in the above equations represent the minimum and maximum permitted values, respectively, of the quantization parameter QP, and for example can be such that but not limited to the values 0 and 51, respectively.

However, because the values Index_B and Index_A are limited to lie in a predetermined interval, if any of the computed coefficients lie outside the interval, those values are limited to the permitted range by the "clip" function. The function "clip" is defined as:

clip(a, b, c)=IF (c<a) THEN a

ELSE IF (c>b) THEN b

ELSE c

By default, Filter_Offset_A and Filter_Offset_B values **39** are both assumed to have a value of zero. Further, within the default filtering, Index_A is also used to access the table of C0 values. Transmission of the Filter_Offset_A and Filter_Offset_B values **39** in the slice header **27** (see FIG. **2**) provides a means of adapting the properties of the deblocking filter **44** in terms of the magnitude of the thresholds used in the activity checks and the maximum change in sample values that can be produced by the default filter **44**. This flexibility helps to allow the encoder to achieve the optimal visual quality of the decoded and filtered video. Typically, the semantic in the slice header **27** slice_alpha_c0_offset_div2 specifies the offset **39** used in accessing the ALPHA (α) and C0 deblocking filter tables for filtering operations controlled by the macroblocks **24** within the slice **32**. The decoded value of this parameter is in the range from +6 to −6, inclusive. From this value, the offset **39** that shall be applied when addressing these tables is computed as:

$$\text{Filter\_Offset\_A}=\text{slice\_alpha\_c0\_offset}_{div}2<<1$$

If this value is not present in the slice header **27**, then the value of this field shall be inferred to be zero.

Correspondingly, the semantic in the slice header **27** slice_beta_offset_div2 specifies the offset **39** used in accessing the BETA (β) deblocking filter tables for filtering operations controlled by the macroblocks **24** within the slice **32**. The decoded value of this parameter is in the range from +6 to −6, inclusive. From this value, the offset **39** that shall be applied when addressing these tables is computed as:

$$\text{Filter\_Offset\_B}=\text{slice\_beta\_offset\_div2}<<1.$$

If this value **39** is not present in the slice header **27**, then the value of this field shall be inferred to be zero. The resulting Variable-Shift Table Indexing (VSTI) method (using the offsets **39** to shift selection of the α-, β-, and clipping (C0) values) allows the decoder **20** to make use of the offset **39** that is specified on the individual slice **32** basis and that will be added to the QP value used in indexing the α-, β-, and clipping (C0) tables. Thus,

Alpha (α)=ALPHA_TABLE[Index_A]

Beta (β)=BETA_TABLE[Index_B]

C0=CLIP_TABLE [Bs] [Index_A]

The offset **39** for indexing the clipping table is always the same as for the α-table. In general, it is desired have α and the clipping values remain in sync, although a different offset **39** for β can be beneficial. The implementation of this method can be simplified even further by applying the offset **39** to the base pointers that are used to access the tables. This way, the extra addition only occurs as often as the offset **39** can be changed (on a per-slice basis), not every time the table is accessed. Clipping of the index can be avoided by extending the tables with the last value in the valid range of indices at each end of the table.

A positive offset **39** results in more filtering by shifting a curve (of α, β, or C0 values) to the left on a horizontal QP scale, while a negative offset **39** results in less filtering by shifting a curve to the right. The range of permitted offsets **39** is −12 to +12, in increments of 2. This range is large enough to allow properties of the filter **44** to vary as widely, but is limited to limit additional memory requirements and/or added complexity. This variable-shift method provides both stronger and weaker filtering, and there is sufficient flexibility in the range of values, with reasonable constraints on the amount of variation permitted in the filtering, while maintaining the doubling rate of 6 QP's for α, consistent with the quantization step size. Also, the clipping (C0) and α values remain in sync with each other.

The specific decision on the choice of offsets **39** is varied, and dependent upon the content, resolution, and opinion of the viewer. Generally, less filtering is needed for slowly changing, detailed areas and for high-resolution pictures **22**, while more filtering (using positive offsets **39**) is preferable for lower resolution pictures **22**, especially with smooth areas and human faces. More filtering can provide the viewer with a feeling of smoother motion.

Referring again to FIG. **5**, if the check is not passed in step **116**, the sample values are not modified on this line (**118**), otherwise filtering continues. The selection of the filtering mode occurs at the block boundary **47** level. More specifically, switching between the default-mode filtering and the strong-mode filtering does not occur on a line-to-line basis, and default-mode filtering is not used for intra-coded macroblock boundaries **47**. In step **120**, a further determination is made as to whether the macroblocks **24** are intra-coded. If the macroblocks **24** are not intracoded, then a default filter is applied in step **122**, in which the edges **47** with Bs<4 are filtered by computing the filtered samples P_0 and Q_0 based on the DELTA (Δ). The variable Δ represents the difference the between the unfiltered samples p_0 and q_0 and their respective filtered samples, P_0 and Q_0, according to the following relation:

$$\Delta=\text{Clip}(-C,C,(((q_0-p_0)<<2+(p_1-q_1)+4)>>3))$$

$$P_0=\text{Clip}(0, 255, p_0+\Delta)$$

$$Q_0=\text{Clip}(0, 255, q_0-\Delta)$$

The two intermediate threshold variables α_p and α_q are used to determine the clipping value for the default filtering of luminance samples, as well as the choice of one of the two sub-modes of the strong mode filter, where

$$a_p=|p_2-p_0| \text{ and } a_q=|q_2-q_0|.$$

Thus, for default-mode filtering (**122**), the calculations of filtered samples P_1 and Q_1 are modified from the prior art to

increase the parallelism of the filtering process. If $a_p<\beta$ for a luma edge, a filtered P_1 sample generated as specified by:

$$P_1=p_1+\text{Clip}(-C0,\ C0,\ (p_2+(p_0+q_0)>>1-(p_1<<1))>>1).$$

While if $a_q<\beta$ for a luma edge, a filtered Q_1 sample generated as specified by:

$$Q_1=q_1+\text{Clip}(-C0,\ C0,\ (q_2+(p_0+q_0)>>1-(q_1<<1))>>1)$$

where C0 is specified in Table 4. However, the adaptable parameter Index_A is used to address the table, rather than QP_{av}.

A dependency graph for the default mode filter with reduced critical path as shown in FIG. **6** shows that the complexity can be reduced significantly. By shortening the critical path, a reduced cost of default filtering can be achieved and opportunities for parallel processing can be substantially increased, leading to reduced computational requirements. Also, from this figure, the complexity of Bs=4 filtering is potentially reduced by not permitting the filter **44** to switch between default and strong filter modes on a line-by-line basis to help minimise branching stalls and control logic.

For luminance only, C, which represents the maximum change in the level of intensity that the default filter can apply to the p_0 and q_0 samples, is determined by setting it equal to C0 and then incrementing it by one if $\alpha_p<\beta$, and again by one if $\alpha_q<\beta$. In the default luma filtering, P_1 and Q_1 are filtered only if $\alpha_p<\beta$ and $\alpha_q<\beta$, respectively, evaluate to true, while P_1 and Q_1 are never filtered for chroma. Therefore, for chrominance filtering, instead of doing these calculations, C can be defined with the basic relationship:

$$C=C0+1$$

Thus, there is a no need to perform the calculations of a_p and a_q for chrominance and therefore no need to load the sample values p_2 and q_2. This can reduce the complexity of the default chroma filtering by approximately 20%. There is no reduction in quality, either objective or subjective, introduced by this simplification.

on a particular side, a 3-tap filter is used to filter only a single pixel on that side of the boundary **47**.

Specifically, for strong-mode filtering:

$$\alpha_p=|p_2-p_0|$$

$$\alpha_q=|q_2-q_0|$$

Therefore, in step **124**, for filtering of edges with Bs=4 if the following condition holds true

$$\alpha_p<\text{BETA}\ (\beta)\ \text{AND}\ |p_0-q_0|<((\text{ALPHA}\ (\alpha)>>2)+2),$$

then filtering of the left/upper side of the block edge is specified by the equations (**130**)

$$P_0=(p_2+2*p_1+2*p_0+2*q_0+q_1+4)>>3$$

$$P_1=(p_2+p_1+p_0+q_0+2)>>2$$

In the case of luminance filtering, then (**130**)

$$P_2=(2*p_3+3*p_2+p_1+p_0+q_0+4)>>3$$

Otherwise, if the above condition does not hold, then filter only P0 using the 3-tap filter (**128**)

$$P_0=(2*p_1+p_0+q_1+2)>>2$$

Identical but mirrored filters are applied to the right/lower side of the boundary **47**, substituting q and Q for p and P, respectively, in the above description (and vice-versa) (**132**, **134**).

Therefore, if the following condition holds true (**126**):

$$\alpha_p<\text{BETA}\ (\beta)\ \text{AND}\ |p_0-q_0|<((\text{ALPHA}\ (\alpha)>>2)+2)$$

filtering of the right/lower side of the block edge (**134**) is specified by the equations

$$Q_0=(p_1+2*p_0+2*q_0+2*q_1+q_2+4)>>3$$

$$Q_1=(p_0+q_0+q_1+q_2+2)>>2$$

In the case of luminance filtering, then (**134**)

$$Q_2=(2*q_3+3*q_2+q_1+q_0+p_0+4)>>3$$

TABLE 4

	Index_A																								
	0	1	2	3	4	5	6	7	8	9	10	11	12	13	14	15	16	17	18	19	20	21	22	23	24	25
Bs = 1	0	0	0	0	0	0	0	0	0	0	0	0	0	0	0	0	0	0	0	0	0	0	0	1	1	1
Bs = 2	0	0	0	0	0	0	0	0	0	0	0	0	0	0	0	0	0	0	0	0	0	1	1	1	1	1
Bs = 3	0	0	0	0	0	0	0	0	0	0	0	0	0	0	0	0	0	1	1	1	1	1	1	1	1	1

	Index_A																									
	26	27	28	29	30	31	32	33	34	35	36	37	38	39	40	41	42	43	44	45	46	47	48	49	50	51
Bs = 1	1	1	1	1	1	1	1	2	2	2	2	3	3	3	4	4	4	5	6	6	7	8	9	10	11	13
Bs = 2	1	1	1	1	1	2	2	2	2	3	3	3	4	4	5	5	6	7	8	8	10	11	12	13	15	17
Bs = 3	1	2	2	2	2	3	3	3	4	4	4	5	6	6	7	8	9	10	11	13	14	16	18	20	23	25

For strong mode filtering where Bs=4 and the initial activity threshold check **112** has been passed, a further determination to check whether each side of the boundary **47** meets an additional smoothness criteria is performed in steps **124** and **126**. The smoothness criteria for the left/upper side of the boundary **47** is checked in step **124**, while the smoothness criteria for the right/lower side is checked in step **126**. Thus, a choice between a 3-tap filter or a 5-tap filter for the left/upper (P) or the right/lower (Q) side of the boundary **47** is made. If the smoothness criterion is not met

Otherwise, if the above condition does not hold, then only P0 is filtered with the 3-tap filter (**132**)

$$Q_0=(2*q_1+q_0+p_1+2)>>2$$

The system **10** thus includes a set of equations for the strong mode filtering to generate samples P_1 and Q_1 that can provide a greater reduction in the visibility of blocking artifacts than alternative equations that were used in the prior known method. Typically, the filters for samples P_1 and Q_1 consist of only 4 taps, as opposed to the 5 taps used for

the other filtered samples in this strongest filtering mode. However, this is referred to as a 5-tap filter, since 5 taps is the maximum used for any sample. In addition to providing an improved reduction in blocking artifacts, these equations for filtering P_1 and Q_1 are simpler than those used in the prior art method, potentially reducing the complexity of the filter by a small amount.

The system **10** includes tables for ALPHA (α) and BETA (β) that can improve the subjective quality of the filtered video and can also specify an efficient method to allow the encoder **18** to control the characteristics of the deblocking filter **44** by transmitting variable offsets **39** that affect the QP-based indexing of these tables.

Although the invention has been described with reference to certain specific embodiments, various modifications thereof will be apparent to those skilled in the art without departing from the spirit and scope of the invention as outlined in the claims appended hereto.

pair of indices that are used to access the tables of these parameter values, these indices being calculated using the average quantization parameter, QP_{av}, used in coding the two blocks that neighbour the block boundary, as well as a pair of encoder-selected offset parameters that can be transmitted in a slice header or other high-level syntax structures of a video bitstream.

2. The method of claim **1**, wherein the first filtering mode is used for filtering samples across a block boundary that is also a macroblock boundary when the block on at least one side of said block boundary is coded using intra prediction.

3. The method of claim **1**, wherein the second filter mode provides filtered output values based solely on unfiltered samples used as input data.

4. The method of claim **1**, wherein the values of said activity thresholds, ALPHA(α) and BETA (β) for each possible value of the indices $Index_A$ (for α) or $Index_B$ (for β) are

	$Index_A$ (for α) or $Index_B$ (for β)																											
	0	1	2	3	4	5	6	7	8	9	10	11	12	13	14	15	16	17	18	19	20	21	22	23	24	25	26	27	28
α	0	0	0	0	0	0	0	0	0	0	0	0	0	0	0	0	4	4	5	6	7	8	9	10	12	13	15	17	20
β	0	0	0	0	0	0	0	0	0	0	0	0	0	0	0	0	2	2	2	3	3	3	3	4	4	4	6	6	7

	$Index_A$ (for α) or $Index_B$ (for β)																						
	29	30	31	32	33	34	35	36	37	38	39	40	41	42	43	44	45	46	47	48	49	50	51
α	22	25	28	32	36	40	45	50	56	63	71	80	90	101	113	127	144	162	182	203	226	255	255
β	7	8	8	9	9	10	10	11	11	12	12	13	13	14	14	15	15	16	16	17	17	18	18.

The embodiments of the invention in which an exclusive property or privilege is claimed are defined as follows:

1. A method of filtering samples to minimise coding artifacts introduced at a block boundary in a block-based video encoder, the method having the steps of:

(a) checking content activity on every line of samples said block boundary;

(b) determining whether the filtering process will modify the sample values on the line of samples based on content activity thresholds, said content activity thresholds being dependent on an average quantization parameter and a selected filter offset parameter;

(c) determining whether a block on either side of the block boundary was coded using either intra or inter prediction;

(d) providing a pair of filter modes,

i) the first filter mode, a strong filtering mode consisting of a selection of a 3-tap filter sub-mode and an alternative 5-tap filter sub-mode with the selection between these two sub-modes made separately on each side of the block boundary based on the sample values on each line of samples across said block boundary,

ii) the second filter mode, a non-recursive default filtering mode; and

(e) selecting one of the pair of filter modes for filtering the samples, wherein said content-dependent activity checks include a pair of activity threshold values, ALPHA (α) and BETA (β), to determine whether sample values will be modified, and where the values of said activity thresholds are determined based on a

5. The method of claim **2**, wherein said 5-tap filtering sub-mode is applied on the left or upper side of the block boundary only if a first condition holds:

$$|p_2-p_0|<\text{BETA }(\beta)\text{ AND }|p_0-q_0|<((\text{ALPHA }(\alpha)>>2)+2)$$

wherein p_0, p_2, and q_0 are unfiltered sample values across a block boundary.

6. The method of claim **1**, wherein output values P_0, P_1 and P_2 for the luminance component are computed using the following equations when said 5-tap filter sub-mode is applied:

$$P_0=(p_2+2*p_1+2*p_0+2*q_0+q_1+4)>>3$$

$$P_1=(p_2+p_1+p_0+q_0+2)>>2$$

$$P_2=(2*p_3+3*p_2+p_1+p_0+q_0+4)>>3$$

wherein p_0, p_1, p_2, p_3, q_0, and q_1 are unfiltered sample values across a block boundary.

7. The method of claim **2**, wherein said 5-tap filtering mode is applied on the right or lower side of the block boundary only if a second condition holds:

$$|q_2-q_0|<\text{BETA }(\beta)\text{ AND }|p_0-q_0|<((\text{ALPHA }(\alpha)>>2)+2)$$

wherein p_0, q_0, and q_2 are unfiltered sample values across a block boundary.

8. The method of claim **1**, wherein said output values Q_0, Q_1, and Q_2 for the luminance component are computed using the following equations when said 5-tap filter sub-mode is applied:

$$Q_0=(q_2+2*q_1+2*q_0+2*p_0+p_1+4)>>3$$

$$Q_1=(q_2+q_1+q_0+p_0+2)>>2$$

$$Q_2=(2*q_3+3*q_2+q_1+q_0+p_0+4)>>3$$

wherein p_0, p_1, q_0, q_1, q_2, and q_3 are unfiltered sample values across a block boundary.

9. The method of claim **5**, wherein said 3-tap filtering mode is applied on the left or upper side of the block boundary whenever said first condition is not satisfied.

10. The method of claim **1**, wherein filtering using said 3-tap filtering sub-mode on the left or upper side of the block boundary consists of applying the following equation:

$$P_0=(2*p_1+p_0+q_1+2)>>2$$

wherein p_0, p_1, and q_1 are unfiltered sample values across a block boundary.

11. The method of claim **7**, wherein said 3-tap filtering mode is applied on the right or lower side of the block boundary whenever said second condition is not satisfied.

12. The method of claim **1**, wherein filtering using said 3-tap filtering mode on the right or lower side of the block boundary consists of applying the following equation:

$$Q_0=(2*q_1+q_0+p_1+2)>>2$$

wherein p_1, q_0, and q_1 are unfiltered sample values across a block boundary.

13. The method of claim **3**, wherein the following equations are used to compute the filtered sample values at the second position from the block boundary on either side, denoted P_1 and Q_1, for the luminance component on block boundaries upon which the second filter mode is applied:

$$P_1=p_1+\mathrm{Clip}(-C0,\ C0,\ (p_2+(p_0+q_0)>>1-(p_1<<1))>>1)$$

$$Q_1=q_1+\mathrm{Clip}(-C0,\ C0,\ (q_2+(p_0+q_0)>>1-(q_1<<1))>>1)$$

wherein p_0, p_1, p_2, q_0, q_1, and q_2 are unfiltered sample values across a block boundary.

14. A method of filtering according to claim **1**, wherein variable index offsets are added to the average QP value, QP_{av}, in order to compute the indices that are used to address the tables of ALPHA (α) and BETA (β) values, such that

$$\mathrm{Index}_A=\mathrm{Clip}(QP_{min},\ QP_{max},\ QP_{av}+\mathrm{Filter\_Offset\_}A)$$

$$\mathrm{Index}_B=\mathrm{Clip}(QP_{min},\ QP_{max},\ QP_{av}+\mathrm{Filter\_Offset\_}B).$$

15. A method of filtering according to claim **13**, wherein the value of the C0 parameter used for clipping the change in the sample values when applying the default filtering mode is computed using the value of Index_A to address the table of C0 values.

16. A method of controlling a filter's properties to adjust the properties of said filter at a block boundary, said method having the steps of:

(a) computing average quantization parameter value (QP_{av}) at said block boundary;

(b) adding offset values Filter_Offset_A and Filter_Offset_B to the average quantization parameter value QP_{av}, and clipping these values within a given range to determine the table indices Index_A and Index_B; and

(c) accessing an ALPHA (α) table, a BETA (β) table and said Clipping (C0) table using these indices computed based on the filter offsets and the average quantization parameter value such that:

ALPHA=ALPHA_TABLE[Index_A]

BETA=BETA_TABLE [Index_B]

C0=CLIP_TABLE[Bs] [Index_A]

17. A method of filtering samples to minimize coding artifacts introduced at a block boundary in a block-based video encoder, the method having the steps of:

(a) checking content activity on every line of samples said block boundary;

(b) detennining whether the filtering process will modify the sample values on the line of samples based on content activity threshold, said content activity thresholds being dependent on an average quantization parameter and a selected filter offset parameter;

(c) determining whether a block on either side of the block boundary was coded using either intra or inter prediction;

(d) providing a pair of filter modes,

i) the first filter mode, a strong filtering mode consisting of a selection of a 3-tap filter sub-mode and an alternative 5-tap filter sub-mode with the selection between these two sub-modes made separately on each side of the block boundary based on the sample values on each line of samples across said block boundary,

ii) the second filter made, a non-recursive default filtering mode; and

(e) selecting one of the pair of filter modes for filtering the samples,

wherein the first filtering mode is used for filtering samples across a block boundary that is also a macroblock boundary when the block on at least one side of said block boundary is coded using intra prediction, and

wherein said 5tap filtering sub-mode is applied on the left or upper side of the block boundary only if a first condition holds:

$$|p_2-p_0|<\mathrm{BETA}\ (\beta)\ \mathrm{AND}\ |p_0-q_0|<((\mathrm{ALPHA}\ (\alpha)>>2)+2)$$

wherein p_0, p_2, and q_0 are unfiltered sample values across a block boundary.

18. The method of claim **17**, wherein said content-dependent activity checks include a pair of activity threshold values, ALPHA (α) and BETA (β), to determine whether sample values will be modified, and where the values of said activity thresholds are determined based on a pair of indices that are used to access the tables of these parameter values, these indices being calculated using the average quantization parameter, QP_{av}, used in coding the two blocks that neighbour the block boundary, as well as a pair of encoder-selected offset parameters that can be transmitted in a slice header or other high-level syntax structures of a video bitstream.

19. The method of claim **17**, wherein the second filter mode provides filtered output values based solely on unfiltered samples used as input data.

20. The method of claim **18**, wherein the values of said activity thresholds, ALPHA(α) and BETA (β) for each possible value of the indices Index_A (for α) or Index_B (for β) are

	$Index_A$ (for α) or $Index_B$ (for β)																											
	0	1	2	3	4	5	6	7	8	9	10	11	12	13	14	15	16	17	18	19	20	21	22	23	24	25	26	27	28
α	0	0	0	0	0	0	0	0	0	0	0	0	0	0	0	0	4	4	5	6	7	8	9	10	12	13	15	17	20
β	0	0	0	0	0	0	0	0	0	0	0	0	0	0	0	0	2	2	2	3	3	3	3	4	4	4	6	6	7

	$Index_A$ (for α) or $Index_B$ (for β)																						
	29	30	31	32	33	34	35	36	37	38	39	40	41	42	43	44	45	46	47	48	49	50	51
α	22	25	28	32	36	40	45	50	56	63	71	80	90	101	113	127	144	162	182	203	226	255	255
β	7	8	8	9	9	10	10	11	11	12	12	13	13	14	14	15	15	16	16	17	17	18	18.

21. The method of claim **17**, wherein output values P_0, P_1 and P_2 for the luminance component are computed using the following equations when said 5-tap filter sub-mode is applied:

$$P_0=(p_2*p_1+2*p_0+2*q_0+q_1+4)>>3$$

$$P_1=(p_2+p_1+p_0+q_0+2)>>2$$

$$P_2=(2*p_3+3*p_2+p_1+p_0+q_0+4)>>3$$

wherein p_0, p_1, p_2, p_3, and q_0 are unfiltered sample values across a block boundary.

22. The method of claim **17**, wherein said 5-tap filtering mode is applied on the right or lower side of the block boundary only if a second condition holds:

$$|q_2-q_0|<\text{BETA } (\beta) \text{ AND } |p_0-q_0|<((\text{ALPHA } (\alpha)>>2)2)$$

wherein p_0, q_0, q_1 and q_2 are unfiltered sample values across a block boundary.

23. The method claim **17**, wherein said output values Q_0, Q_1, and Q_2 for the luminance component are computed using the following equations when said 5-tap filter sub-mode is applied:

$$Q_0=(q_2+2*q_1+2*q_0+2*p_0+p_1+4)>>3$$

$$Q_1=(q_2+q_1+q_0+p_0+2)>>2$$

$$Q_2=(2*q_3+3*q_2+q_1+q_0+p_0+4)>>3$$

wherein p_0, p_1, q_0, q_1, q_2 and q_3 are unfiltered sample values across a block boundary.

24. The method of claim **17**, wherein said 3-tap filtering mode is applied on the left or upper side of the block boundary whenever said first condition is not satisfied.

25. The method of claim **17**, wherein filtering using said 3-tap filtering sub-mode on the left or upper side of the block boundary consists of applying the following equation:

$$P_0=(2*p_1+p_0+q_1+2)>>2$$

wherein p_0, p_1 and q_1 are unfiltered sample values across a block boundary.

26. The method of claim **22**, wherein said 3-tap filtering mode is applied on the right or lower side of the block boundary whenever said second condition is not satisfied.

27. The method of claim **17**, wherein filtering using said 3-tap filtering mode on the right or lower side of the block boundary consists of applying the following equation:

$$Q_0=(2*q_1+q_0+p_1+2)>>2$$

wherein p_1, q_0 and q_1 are unfiltered sample values across a block boundary.

28. The method of claim **19**, wherein the following equations are used to compute the filtered sample values at the second position from the block boundary on either side, denoted P_1 and Q_1, for the luminance component on block boundaries upon which the second filter mode is applied:

$$P_1=p_1+\text{Clip}(-C0,\ C0,\ (p_2+(p_0+q_0)>>1-(p_1<<1))>>1)$$

$$Q_1=q_1+\text{Clip}(-C0,\ C0,\ (q_2+(p_0+q_0)>>1-(q_1<<1))>>1)$$

wherein p_0, p_1, p_2, q_0, q_1, and q_2 are unfiltered sample values across a block boundary.

29. A method of filtering according to claim **28**, wherein variable index offsets are added to the average QP value, QP_{av}, in order to compute the indices that are used to address the tables of ALPHA (α) and BETA (β) values, such that

$$\text{Index}_A=\text{Clip}(QP_{min},\ QP_{max},\ QP_{av}+\text{Filter\_Offset\_}A)$$

$$\text{Index}_B=\text{Clip}(QP_{min},\ QP_{max},\ QP_{av}+\text{Filter\_Offset\_}B).$$

30. A method of filtering according to claim **28**, wherein the value of the C0 parameter used for clipping the change in the sample values when applying the default filtering mode is computed using the value of Index_A to address the table of C0 values.

31. A method of filtering samples to minimize coding artifacts introduced at a block boundary in a block-based video encoder, the method having the steps of:

(a) checking content activity on every line of samples said block boundary;

(b) determining whether the filtering process will modify the sample values on the line of samples based on content activity thresholds, said content activity thresholds being dependent on an average quantization parameter and a selected filter offset parameter;

(c) determining whether a block on either side of the block boundary was coded using either intra or inter prediction;

(d) providing a pair of filter modes,

i) the first filter mode, a strong filtering mode consisting of a selection of a 3-tap filter sub-mode and an alternative 5-tap filter sub-mode with the selection between these two sub-modes made separately on each side of the block boundary based on the sample values on each line of samples across said block boundary,

ii) the second filter mode, a non-recursive default filtering mode; and

(e) selecting one of the pair of filter modes for filtering the samples,

wherein output values P_0, P_1 and P_2 for the luminance component are computed using the following equations when said 5-rap filter sub-mode is applied:

$$P_0=(p_2+2*p_1+2*p_0+2*q_0+q_1+4)>>3$$

$$P_1=(p_2+p_1+p_0+q_0+2)>>2$$

$$P_2=(2*p_3+3*p_2+p_1+p_0+q_0+4)>>3$$

wherein p_0, p_2, and q_0 are unfiltered sample values across a block boundary.

32. The method of claim **31**, wherein the first filtering mode is used for filtering samples across a block boundary that is also a macroblock boundary when the block on at least one side of said block boundary is coded using intra prediction.

33. The method of claim **31**, wherein said content-dependent activity checks include a pair of activity threshold values, ALPHA (α) and BETA (β), to determine whether sample values will be modified, and where the values of said activity thresholds are determined based on a pair of indices that are used to access the tables of these parameter values, these indices being calculated using the average quantization parameter, QP_{av}, used in coding the two blocks that neighbour the block boundary, as well as a pair of encoder-selected offset parameters that can be transmitted in a slice header or other high-level syntax structures of a video bitstream.

34. The method of claim **31**, wherein the second filter mode provides filtered output values based solely on unfiltered samples used as input data.

35. The method of claim **33**, wherein the values of said activity thresholds, ALPHA(α) and BETA (β) for each possible value of the indices $Index_A$ (for α) or $Index_B$ (for β) are

	$Index_A$ (for α) or $Index_B$ (for β)																											
	0	1	2	3	4	5	6	7	8	9	10	11	12	13	14	15	16	17	18	19	20	21	22	23	24	25	26	27	28
α	0	0	0	0	0	0	0	0	0	0	0	0	0	0	0	0	4	4	5	6	7	8	9	10	12	13	15	17	20
β	0	0	0	0	0	0	0	0	0	0	0	0	0	0	0	0	2	2	2	3	3	3	3	4	4	4	6	6	7

	$Index_A$ (for α) or $Index_B$ (for β)																						
	29	30	31	32	33	34	35	36	37	38	39	40	41	42	43	44	45	46	47	48	49	50	51
α	22	25	28	32	36	40	45	50	56	63	71	80	90	101	113	127	144	162	182	203	226	255	255
β	7	8	8	9	9	10	10	11	11	12	12	13	13	14	14	15	15	16	16	17	17	18	18.

36. The method of claim **32**, wherein said 5-tap filtering sub-mode is applied on the left or upper side of the block boundary only if a first condition holds:

$$|p_2-p_0|<\text{BETA }(\beta)\text{ AND }|p_0-q_0|<((\text{ALPHA }(\alpha)>>2)+2)$$

wherein p_0, p_2 and q_0 are unfiltered sample values across a block boundary.

37. The method of claim **32**, wherein said 5-tap filtering mode is applied on the right or lower side of the block boundary only if a second condition holds:

$$|q_2-q_0|<\text{BETA }(\beta)\text{ AND }|p_0-q_0|<((\text{ALPHA }(\alpha)>>2)+2)$$

wherein p_0, q_0, and q_2 are unfiltered sample values across a block boundary.

38. The method of claim **31**, wherein said output values Q_0, Q_1, and Q_2 for the luminance component are computed using the following equations when said 5-tap filter sub-mode is applied:

$$Q_0=(q_2+2*q_1+2*q_0+2*p_0+p_1+4)>>3$$

$$Q_1=(q_2+q_1+q_0+p_0+2)>>2$$

$$Q_2=(2*q_3+3*q_2+q_1+q_0+p_0+4)>>3$$

wherein p_0, p_1, q_0, q_1, q_2 and q_3 are unfiltered sample values across a block boundary.

39. The method of claim **36**, wherein said 3-tap filtering mode is applied on the left or upper side of the block boundary whenever said first condition is not satisfied.

40. The method of claim **31**, wherein filtering using said 3-tap filtering sub-mode on the left or upper side of the block boundary consists of applying the following equation:

$$P_0=(2*p_1+p_0+q_1+2)>>2$$

wherein p_0, p_1 and q_1 are unfiltered sample values across a block boundary.

41. The method of claim **37**, wherein said 3-tap filtering mode is applied on the right or lower side of the block boundary whenever said second condition is not satisfied.

42. The method of claim **31**, wherein filtering using said 3-tap filtering mode on the right or lower side of the block boundary consists of applying the following equation:

$$Q_0=(2*q_1+q_0+p_1+2)>>2$$

wherein p_1, q_0 and q_1 are unfiltered sample values across a block boundary.

43. The method of claim **34**, wherein the following equations are used to compute the filtered sample values at the second position from the block boundary on either side, denoted P_1 and Q_1, for the luminance component on block boundaries upon which the second filter mode is applied:

$$P_1=p_1+\text{Clip}(-C0,\ C0,\ (p_2+(p_0+q_0)>>1-(p_1<<1))>>1)$$

$$Q_1=q_1+\text{Clip}(-C0,\ C0,\ (q_2+(p_0+q_0)>>1-(q_1<<1))>>1)$$

wherein p_0, p_1, p_2, q_0, q_1, q_2 and q_3 are unfiltered sample values across a block boundary.

44. A method of filtering according to claim **33**, wherein variable index offsets are added to the average QP value, QP_{av}, in order to compute the indices that are used to address the tables of ALPHA (α) and BETA (β) values, such that

$$Index_A=\text{Clip}(QP_{min},\ QP_{max},\ QP_{av}+\text{Filter\_Offset\_}A)$$

$$Index_B=\text{Clip}(QP_{min},\ QP_{max},\ QP_{av}+\text{Filter\_Offset\_}B).$$

45. A method of filtering according to claim **43**, wherein the value of the C0 parameter used for clipping the change in the sample values when applying the default filtering mode is computed using the value of $Index_A$ to address the table of C0 values.

46. A method of filtering samples to minimise coding artifacts introduced at a block boundary in a block-based video encoder, the method having the steps of:

(a) checking content activity on every line of samples said block boundary;

(b) determining whether the filtering process will modify the sample values on the line of samples based on content activity thresholds, said content activity thresholds being dependent on an average quantization parameter and a selected filter offset parameter;

(c) detennining whether a block on either side of the block boundary was coded using either intra or inter prediction;

(d) providing a pair of filter modes,

i) the first filter mode, a strong filtering mode consisting of a selection of a 3-tap filter sub-mode and an alternative 5-tap filter sub-mode with the selection between these two sub-modes made separately on each side of the block boundary based on the sample values on each line of samples across said block boundary,

ii) the second filter mode, a non-recursive default filtering mode; and

(e) selecting one of the pair of filter modes for filtering the samples,

wherein the first filtering mode is used for filtering samples across a block boundary that is also a macroblock boundary when the block on at least one side of said block boundary is coded using intra prediction, and

wherein said 5-tap filtering mode is applied on the right or lower side of the block boundary only if a second condition holds:

$$|q_2-q_0|<\text{BETA}(\beta)\ \text{AND}\ |p_0-q_0|<((\text{ALPHA}(\alpha)>>2)+2)$$

wherein p_0, q_0 and q_2 are unfiltered sample values across a block boundary.

47. The method of claim **46**, wherein said content-dependent activity checks include a pair of activity threshold values, ALPHA (α) and BETA (β), to determine whether sample values will be modified, and where the values of said activity thresholds are determined based on a pair of indices that are used to access the tables of these parameter values, these indices being calculated using the average quantization parameter, QP_{av}, used in coding the two blocks that neighbour the block boundary, as well as a pair of encoder-selected offset parameters that can be transmitted in a slice header or other high-level syntax structures of a video bitstream.

48. The method of claim **46**, wherein the second filter mode provides filtered output values based solely on unfiltered samples used as input data.

49. The method of claim **47**, wherein the values of said activity thresholds, ALPHA(α) and BETA (β) for each possible value of the indices Index_A (for α) or Index_B (for β) are

	Index_A (for α) or Index_B (for β)																											
	0	1	2	3	4	5	6	7	8	9	10	11	12	13	14	15	16	17	18	19	20	21	22	23	24	25	26	27	28
α	0	0	0	0	0	0	0	0	0	0	0	0	0	0	0	0	4	4	5	6	7	8	9	10	12	13	15	17	20
β	0	0	0	0	0	0	0	0	0	0	0	0	0	0	0	0	2	2	2	3	3	3	3	4	4	4	6	6	7

	Index_A (for α) or Index_B (for β)																						
	29	30	31	32	33	34	35	36	37	38	39	40	41	42	43	44	45	46	47	48	49	50	51
α	22	25	28	32	36	40	45	50	56	63	71	80	90	101	113	127	144	162	182	203	226	255	255
β	7	8	8	9	9	10	10	11	11	12	12	13	13	14	14	15	15	16	16	17	17	18	18.

50. The method of claim **46**, wherein said 5-tap filtering sub-mode is applied on the left or upper side of the block boundary only if a first condition holds:

$$|p_2-p_0|<\text{BETA}(\beta)\ \text{AND}\ |p_0-q_0|<((\text{ALPHA}(\alpha)>>2)+2)$$

wherein p_0, p_2 and q_0 are unfiltered sample values across a block boundary.

51. The method of claim **46**, wherein output values P_0, P_1 and P_2 for the luminance component are computed using the following equations when said 5-tap filter sub-mode is applied:

$$P_0=(p_2*p_1+2*p_0+2*q_0+q_1+4)>>3$$

$$P_1=(p_2+p_1+p_0+q_0+2)>>2$$

$$P_2=(2*p_3+3*p_2+p_1+p_0+q_0+4)>>3$$

wherein p_0, p_1, p_2, p_3, q_0 and q_1 are unfiltered sample values across a block boundary.

52. The method of claim **46**, wherein said output values Q_0, Q_1, and Q_2 for the luminance component are computed using the following equations when said 5-tap filter sub-mode is applied:

$$Q_0=(q_2+2*q_1+2*q_0+2*p_0+p_1+4)>>3$$

$$Q_1=(q_2+q_1+q_0+p_0+2)>>2$$

$$Q_2=(2*q_3+3*q_2+q_1+q_0+p_0+4)>>3$$

wherein p_0, p_1, q_0, q_1, q_2 and q_3 are unfiltered sample values across a block boundary.

53. The method of claim **50**, wherein said 3-tap filtering mode is applied on the left or upper side of the block boundary whenever said first condition is not satisfied.

54. The method of claim **46**, wherein filtering using said 3-tap filtering sub-mode on the left or upper side of the block boundary consists of applying the following equation:

$$P_0=(2*p_1+p_0+q_1+2)>>2$$

wherein p_0, p_1 and q_1 are unfiltered sample values across a block boundary.

55. The method of claim **46**, wherein said 3-tap filtering mode is applied on the right or lower side of the block boundary whenever said second condition is not satisfied.

56. The method of claim **46**, wherein filtering using said 3-tap filtering mode on the right or lower side of the block boundary consists of applying the following equation:

$$Q_0=(2*q_1+q_0+p_1+2)>>2$$

wherein p_1, q_0 and q_1 are unfiltered sample values across a block boundary.

57. The method of claim **48**, wherein the following equations are used to compute the filtered sample values at the second position from the block boundary on either side, denoted P_1, and Q_1, for the luminance component on block boundaries upon which the second filter mode is applied:

$$P_1=p_1+\mathrm{Clip}(-C0,\ C0,\ (p_2+(p_0+q_0)>>1-(p_1<<1))>>1)$$

$$Q_1=q_1+\mathrm{Clip}(-C0,\ C0,\ (q_2+(p_0+q_0)>>1-(q_1<<1))>>1)$$

wherein p_0, p_1, p_2, q_0, q_1 and q_2 are unfiltered sample values across a block boundary.

58. A method of filtering according to claim **47**, wherein variable index offsets are added to the avenge QP value, QP_{av}, in order to compute the indices that are used to address the tables of ALPHA (α) and BETA (β) values, such that

$$\mathrm{Index}_A=\mathrm{Clip}(QP_{min},\ QP_{max},\ QP_{av}+\mathrm{Filter\_Offset\_}A)$$

$$\mathrm{Index}_B=\mathrm{Clip}(QP_{min},\ QP_{max},\ QP_{av}+\mathrm{Filter\_Offset\_}B).$$

59. A method of filtering according to claim **57**, wherein the value of the C_0 parameter used for clipping the change in the sample values when applying the delimit filtering mode is computed using the value of Index_A to address the table of C_0 values.

60. A method of filtering samples to minimize coding artifacts introduced at a block boundary in a block-based video encoder, the method having the steps of:

(a) checking content activity on every line of samples said block boundary;

(b) determining whether the filtering process will modify the sample values on the line of samples based on content activity thresholds, said content activity thresholds being dependent on an average quantization parameter and a selected filter offset parameter;

(c) determining whether a block on either side of the block boundary was coded using either intra or inter prediction;

(d) providing a pair of filter modes,

i) the first filter mode, a strong filtering mode consisting of a selection of a 3-tap filter sub-mode and an alternative 5-tap filter sub-mode with the selection between these two sub-modes made separately on each side of the block boundary based on the sample values on each line of samples across said block boundary,

ii) the second filter mode, a non-recursive default filtering mode; and

(e) selecting one of the pair of filter modes for filtering the samples,

wherein said output values Q_0, Q_1, and Q_2 for the luminance component are computed using the following equations when said 5-tap filter sub-mode is applied:

$$Q_0=(q_2+2*q_1+2*q_0+2*p_0+p_1+4)>>3$$

$$Q_1=(q_2+q_1+q_0+p_0+2)>>2$$

$$Q_2=(2*q_3+3*q_2+q_1+q_0+p_0+4)>>3$$

wherein p_0, p_1, q_0, q_1, q_2 and q_3 are unfiltered sample values across a block boundary.

61. The method of claim **60**, wherein the first filtering mode is used for filtering samples across a block boundary that is also a macroblock boundary when the block on at least one side of said block boundary is coded using intra prediction.

62. The method of claim **60**, wherein said content-dependent activity checks include a pair of activity threshold values, ALPHA (α) and BETA (β), to determine whether sample values will be modified, and where the values of said activity thresholds are determined based on a pair of indices that are used to access the tables of these parameter values, these indices being calculated using the average quantization parameter, QP_{av}, used in coding the two blocks that neighbour the block boundary, as well as a pair of encoder-selected offset parameters that can be transmitted in a slice header or other high-level syntax structures of a video bitstream.

63. The method of claim **60**, wherein the second filter mode provides filtered output values based solely on unfiltered samples used as input data.

64. The method of claim **62**, wherein the values of said activity thresholds, ALPHA(α) and BETA (β) for each possible value of the indices Index_A (for α) or Index_B (for β) are

	Index_A (for α) or Index_B (for β)																											
	0	1	2	3	4	5	6	7	8	9	10	11	12	13	14	15	16	17	18	19	20	21	22	23	24	25	26	27	28
α	0	0	0	0	0	0	0	0	0	0	0	0	0	0	0	0	4	4	5	6	7	8	9	10	12	13	15	17	20
β	0	0	0	0	0	0	0	0	0	0	0	0	0	0	0	0	2	2	2	3	3	3	3	4	4	4	6	6	7

	Index_A (for α) or Index_B (for β)																						
	29	30	31	32	33	34	35	36	37	38	39	40	41	42	43	44	45	46	47	48	49	50	51
α	22	25	28	32	36	40	45	50	56	63	71	80	90	101	113	127	144	162	182	203	226	255	255
β	7	8	8	9	9	10	10	11	11	12	12	13	13	14	14	15	15	16	16	17	17	18	18.

65. The method of claim **61**, wherein said 5-tap filtering sub-mode is applied on the left or upper side of the block boundary only if a first condition holds:

$$|p_2-p_0|<\text{BETA }(\beta)\text{ AND }|p_0-q_0|<((\text{ALPHA }(\alpha)>>2)+2)$$

wherein p_0, p_2 and q_0 are unfiltered sample values across a block boundary.

66. The method of claim **60**, wherein output values P_0, P_1 and P_2 for the luminance component are computed using the following equations when said 5-tap filter sub-mode is applied:

$$P_0=(p_2+2*p_1+2*p_0+2*q_0+q_1+4)>>3$$

$$P_1=(p_2+p_1+p_0+q_0+2)>>2$$

$$P_2=(2*p_3+3*p_2+p_1+p_0+q_0+4)>>3$$

wherein p_0, p_1, p_2, p_3, q_0 and q_1 are unfiltered sample values across a block boundary.

67. The method of claim **61**, wherein said 5-tap filtering mode is applied on the right or lower side of the block boundary only if a second condition holds:

$$|q_2-q_0|<\text{BETA }(\beta)\text{ AND }|p_0-q_0|<((\text{ALPHA }(\alpha)>>2)+2)$$

wherein p_0, q_0 and q_2 are unfiltered sample values across a block boundary.

68. The method of claim **65**, wherein said 3-tap filtering mode is applied on the left or upper side of the block boundary whenever said first condition is not satisfied.

69. The method of claim **60**, wherein filtering using said 3-tap filtering sub-mode on the left or upper side of the block boundary consists of applying the following equation:

$$P_0=(2*p_1+p_0+q_1+2)>>2$$

wherein p_0, p_1 and q_1 are unfiltered sample values across a block boundary.

70. The method of claim **67**, wherein said 3-tap filtering mode is applied on the right or lower side of the block boundary whenever said second condition is not satisfied.

71. The method of claim **60**, wherein filtering using said 3-tap filtering mode on the right or lower side of the block boundary consists of applying the following equation:

$$Q_0=(2*q_1+q_0+p_1+2)>>2$$

wherein p_1, q_0 and q_1 are unfiltered sample values across a block boundary.

72. The method of claim **63**, wherein the following equations are used to compute the filtered sample values at the second position from the block boundary on either side, denoted P_1 and Q_1, for the luminance component on block boundaries upon which the second filter mode is applied:

$$P_1=p_1+\text{Clip}(-C0,\ C0,\ (p_2+(p_0+q_0)>>1-(p_1<<1))>>1)$$

$$Q_1=q_1+\text{Clip}(-C0,\ C0,\ (q_2+(p_0+q_0)>>1-(q_1<<1))>>1)$$

wherein p_0, p_1, p_2, q_0, q_1 and q_2 are unfiltered sample values across a block boundary.

73. A method of filtering according to claim **62**, wherein variable index offsets are added to the average QP value, QP_{av}, in order to compute the indices that are used to address the tables of ALPHA (α) and BETA (β) values, such that

$$\text{Index}_A=\text{Clip}(QP_{min},\ QP_{max},\ QP_{av}+\text{Filter\_Offset\_}A)$$

$$\text{Index}_B=\text{Clip}(QP_{min},\ QP_{max},\ QP_{av}+\text{Filter\_Offset\_}B).$$

74. A method of filtering according to claim **72**, wherein the value of the C0 parameter used for clipping the change in the sample values when applying the default filtering mode is computed using the value of Index_A to address the table of C0 values.

75. A method of filtering samples to minimize coding artifacts introduced at a block boundary in a block-based video encoder, the method having the steps of:

(a) checking content activity on every line of samples said block boundary;

(b) determining whether the filtering process will modify the sample values on the line of samples based on content activity thresholds, said content activity thresholds being dependent on an average quantization parameter and a selected filter offset parameter;

(c) determining whether a block on either side of the block boundary was coded using either intra or inter prediction;

(d) providing a pair of filter modes,

i) the first filter mode, a strong filtering mode consisting of a selection of a 3-tap filter sub-mode and an alternative 5-tap filter sub-mode with the selection between these two sub-modes made separately on each side of the block boundary based on the sample values on each line of samples across said block boundary,

ii) the second filter mode, a non-recursive default filtering mode; and

(e) selecting one of the pair of filter modes for filtering the samples,

wherein filtering using said 3-tap filtering sub-mode on the left or upper side of the block boundary consists of applying the following equation:

$$P_0=(2*p_1+p_0+q_1+2)>>2$$

wherein p_0, p_1 and q_1 are unfiltered sample values across a block boundary.

76. The method of claim **75**, wherein the first filtering mode is used for filtering samples across a block boundary that is also a macroblock boundary when the block on at least one side of said block boundary is coded using intra prediction.

77. The method of claim **75**, wherein said content-dependent activity checks include a pair of activity threshold values, ALPHA (α) and BETA (β), to determine whether sample values will be modified, and where the values of said activity thresholds are determined based on a pair of indices that are used to access the tables of these parameter values, these indices being calculated using the average quantization parameter, QP_{av}, used in coding the two blocks that neighbour the block boundary, as well as a pair of encoder-selected offset parameters that can be transmitted in a slice header or other high-level syntax structures of a video bitstream.

78. The method of claim **75**, wherein the second filter mode provides filtered output values based solely on unfiltered samples used as input data.

79. The method of claim **75**, wherein the values of said activity thresholds, ALPHA(α) and BETA (β) for each possible value of the indices Index_A (for α) or Index_B (for β) are

	$Index_A$ (for α) or $Index_B$ (for β)																											
	0	1	2	3	4	5	6	7	8	9	10	11	12	13	14	15	16	17	18	19	20	21	22	23	24	25	26	27	28
α	0	0	0	0	0	0	0	0	0	0	0	0	0	0	0	0	4	4	5	6	7	8	9	10	12	13	15	17	20
β	0	0	0	0	0	0	0	0	0	0	0	0	0	0	0	0	2	2	2	3	3	3	3	4	4	4	6	6	7

	$Index_A$ (for α) or $Index_B$ (for β)																						
	29	30	31	32	33	34	35	36	37	38	39	40	41	42	43	44	45	46	47	48	49	50	51
α	22	25	28	32	36	40	45	50	56	63	71	80	90	101	113	127	144	162	182	203	226	255	255
β	7	8	8	9	9	10	10	11	11	12	12	13	13	14	14	15	15	16	16	17	17	18	18.

80. The method of claim **76**, wherein said 5-tap filtering sub-mode is applied on the left or upper side of the block boundary only if a first condition holds:

$$|p_2-p_0|<\text{BETA }(\beta)\text{ AND }|p_0-q_0|<((\text{ALPHA }(\alpha)>>2)+2)$$

wherein p_0, p_2 and q_0 are unfiltered sample values across a block boundary.

81. The method of claim **75**, wherein output values P_0, P_1 and P_2 for the luminance component are computed using the following equations when said 5-tap filter sub-mode is applied:

$$P_0=(p_2*p_1+2*p_0+2*q_0+q_1+4)>>3$$

$$P_1=(p_2+p_1+p_0+q_0+2)>>2$$

$$P_2=(2*p_3+3*p_2+p_1+p_0+q_0+4)>>3$$

wherein p_0, p_1, p_2, p_3, q_0 and q_1 are unfiltered sample values across a block boundary.

82. The method of claim **76**, wherein said 5-tap filtering mode is applied on the right or lower side of the block boundary only if a second condition holds:

$$|q_2-q_0|<\text{BETA }(\beta)\text{ AND }|p_0-q_0|<((\text{ALPHA }(\alpha)>>2)+2)$$

wherein p_0, q_0 and q_2 are unfiltered sample values across a block boundary.

83. The method of claim **75**, wherein said output values Q_0, Q_1 and Q_2 for the luminance component are computed using the following equations when said 5-tap filter sub-mode is applied:

$$Q_0=(q_2+2*q_1+2*q_0+2*p_0+p_1+4)>>3$$

$$Q_1=(q_2+q_1+q_0+p_0+2)>>2$$

$$Q_2=(2*q_3+3*q_2+q_1+q_0+p_0+4)>>3$$

wherein p_0, p_1, q_0, q_1, q_2 and q_3 are unfiltered sample values across a block boundary.

84. The method of claim **80**, wherein said 3-tap filtering mode is applied on the left or upper side of the block boundary whenever said first condition is not satisfied.

85. The method of claim **82**, wherein said 3-tap filtering mode is applied on the right or lower side of the block boundary whenever said second condition is not satisfied.

86. The method of claim **75**, wherein filtering using said 3-tap filtering mode on the right or lower side of the block boundary consists of applying the following equation:

$$Q_0=(2*q_1+q_0+p_1+2)>>2$$

wherein p_1, q_0 and q_1 are unfiltered sample values across a block boundary.

87. The method of claim **78**, wherein the following equations are used to compute the filtered sample values at the second position from the block boundary on either side, denoted P_1 and Q_1, for the luminance component on block boundaries upon which the second filter mode is applied:

$$P_1=p_1+\text{Clip}(-C0,\ C0,\ (p_2+(p_0+q_0)>>1-(p_1<<1))>>1)$$

$$Q_1=q_1+\text{Clip}(-C0,\ C0,\ (q_2+(p_0+q_0)>>1-(q_1<<1))>>1)$$

wherein p_0, p_1, p_2, q_0, q_1 and q_2 are unfiltered sample values across a block boundary.

88. A method of filtering according to claim **77**, wherein variable index offsets are added to the average QP value, QP_{av}, in order to compute the indices that are used to address the tables of ALPHA (α) and BETA (β) values, such that

$$\text{Index}_A=\text{Clip}(QP_{min},\ QP_{max},\ QP_{av}+\text{Filter\_Offset\_}A)$$

$$\text{Index}_B=\text{Clip}(QP_{min},\ QP_{max},\ QP_{av}+\text{Filter\_Offset\_}B).$$

89. A method of filtering according to claim **87**, wherein the value of the C0 parameter used for clipping the change in the sample values when applying the default filtering mode is computed using the value of Index_A to address the table of C0 values.

90. A method of filtering samples to minimize coding artifacts introduced at a block boundary in a block-based video encoder, the method having the steps of:

(a) checking content activity on every line of samples said block boundary;

(b) determining whether the filtering process will modify the sample values on the line of samples based on content activity thresholds, said content activity thresholds being dependent on an average quantization parameter and a selected filter offset parameter;

(c) determining whether a block on either side of the block boundary was coded using either intra or inter prediction;

(d) providing a pair of filter modes,

i) the first filter mode, a strong filtering mode consisting of a selection of a 3-tap filter sub-mode and an alternative 5-tap filter sub-mode with the selection between these two sub-modes made separately on each side of the block boundary based on the sample values on each line of samples across said block boundary,

ii) the second filter mode, a non-recursive default filtering mode; and

(e) selecting one of the pair of filter modes for filtering the samples,

wherein filtering using said 3-tap filtering mode on the right or lower side of the block boundary consists of applying the following equation:

$$Q_0=(2*q_1+q_0+p_1+2)>>2$$

wherein p_1, q_0 and q_1 are unfiltered sample values across a block boundary.

91. The method of claim **90**, wherein the first filtering mode is used for filtering samples across a block boundary that is also a macroblock boundary when the block on at least one side of said block boundary is coded using intra prediction.

92. The method of claim **90**, wherein said content-dependent activity checks include a pair of activity threshold values, ALPHA (α) and BETA (β), to determine whether sample values will be modified, and where the values of said activity thresholds are determined based on a pair of indices tat are used to access the tables of these parameter values, these indices being calculated using the average quantization parameter, QP_{av}, used in coding the two blocks that neighbour the block boundary, as well as a pair of encoder-selected offset parameters that can be transmitted in a slice header or other high-level syntax structures of a video bitstream.

93. The method of claim **90**, wherein the second filter mode provides filtered output values based solely on unfiltered samples used as input data.

94. The method of claim **92**, wherein the values of said activity thresholds, ALPHA(α) and BETA (β) for each possible value of the indices $Index_A$ (for α) or $Index_B$ (for β) are

97. The method of claim **91**, wherein said 5-tap filtering mode is applied on the right or lower side of the block boundary only if a second condition holds:

$$|q_2-q_0|<\text{BETA }(\beta)\text{ AND }|p_0-q_0|<((\text{ALPHA }(\alpha)>>2)+2)$$

wherein p_0, q_0 and q_2 are unfiltered sample values across a block boundary.

98. The method of claim **90**, wherein said output values Q_0, Q_1, and Q_2 for the luminance component are computed using the following equations when said 5-tap filter sub-mode is applied:

$$Q_0=(q_2+2*q_1+2*q_0+2*p_0+p_1+4)>>3$$

$$Q_1=(q_2+q_1+q_0+p_0+2)>>2$$

$$Q_2=(2*q_3+3*q_2+q_1+q_0+p_0+4)>>3$$

wherein p_0, p_1, q_0, q_1, q_2 and q_3 are unfiltered sample values across a block boundary.

99. The method of claim **95**, wherein said 3-tap filtering mode is applied on the left or upper side of the block boundary whenever said first condition is not satisfied.

100. The method of claim **90**, wherein filtering using said 3-tap filtering sub-mode on the left or upper side of the block boundary consists of applying the following equation:

$$P_0=(2*p_1+p_0+q_1+2)>>2$$

wherein p_0, p_1 and q_1 are unfiltered sample values across a block boundary.

	$Index_A$ (for α) or $Index_B$ (for β)																												
	0	1	2	3	4	5	6	7	8	9	10	11	12	13	14	15	16	17	18	19	20	21	22	23	24	25	26	27	28
α	0	0	0	0	0	0	0	0	0	0	0	0	0	0	0	0	4	4	5	6	7	8	9	10	12	13	15	17	20
β	0	0	0	0	0	0	0	0	0	0	0	0	0	0	0	0	2	2	2	3	3	3	3	4	4	4	6	6	7

	$Index_A$ (for α) or $Index_B$ (for β)																						
	29	30	31	32	33	34	35	36	37	38	39	40	41	42	43	44	45	46	47	48	49	50	51
α	22	25	28	32	36	40	45	50	56	63	71	80	90	101	113	127	144	162	182	203	226	255	255
β	7	8	8	9	9	10	10	11	11	12	12	13	13	14	14	15	15	16	16	17	17	18	18.

95. The method of claim **91**, wherein said 5-tap filtering sub-mode is applied on the left or upper side of the block boundary only if a first condition holds:

$$|p_2-p_0|<\text{BETA }(\beta)\text{ AND }|p_0-q_0|<((\text{ALPHA }(\alpha)>>2)+2)$$

wherein p_0, p_2 and q_0 are unfiltered sample values across a block boundary.

96. The method of claim **90**, wherein output values P_0, P_1 and P_2 for the luminance component are computed using the following equations when said 5-tap filter sub-mode is applied:

$$P_0=(p_2*p_1+2*p_0+2*q_0+q_1+4)>>3$$

$$P_1=(p_2+p_1+p_0+q_0+2)>>2$$

$$P_2=(2*p_3+3*p_2+p_1+p_0+q_0+4)>>3$$

wherein p_0, p_1, p_2, p_3, q_0 and q_1 are unfiltered sample values across a block boundary.

101. The method of claim **97**, wherein said 3-tap filtering mode is applied on the right or lower side of the block boundary whenever said second condition is not satisfied.

102. The method of claim **93**, wherein the following equations are used to compute the filtered sample values at the second position from the block boundary on either side, denoted P_1 and Q_1, for the luminance component on block boundaries upon which the second filter mode is applied:

$$P_1=p_1+\text{Clip}(-C0,\ C0,\ (p_2+(p_0+q_0)>>1-(p_1<<1))>>1)$$

$$Q_1=q_1+\text{Clip}(-C0,\ C0,\ (q_2+(p_0+q_0)>>1-(q_1<<1))>>1)$$

wherein p_0, p_1, p_2, q_0, q_1 and q_2 are unfiltered sample values across a block boundary.

103. A method of filtering according to claim **92**, wherein variable index offsets are added to the average QP value, QP_{av}, in order to compute the indices that are used to address the tables of ALPHA (α) and BETA (β) values, such that

$$\text{Index}_A=\text{Clip}(QP_{min}, QP_{max}, QP_{av}+\text{Filter\_Offset\_}A)$$

$$\text{Index}_B=\text{Clip}(QP_{min}, QP_{max}, QP_{av}+\text{Filter\_Offset\_}B).$$

104. A method of filtering according to claim **102**, wherein the value of the C0 parameter used for clipping the change in the sample values when applying the default filtering mode is computed using the value of Index_A to address the table of C0 values.

105. A method of filtering samples to minimize coding artifacts introduced at a block boundary in a block-based video encoder, the method having the steps of:

(a) checking content activity on every line of samples said block boundary;

(b) determining whether the filtering process will modify the sample values on the line of samples based on content activity thresholds, said content activity thresholds being dependent on an average quantization parameter and a selected filter offset parameter;

(c) determining whether a block on either side of the block boundary was coded using either intra or inter prediction;

that is also a macroblock boundary when the block on at least one side of said block boundary is coded using intra prediction.

107. The method of claim **105**, wherein said content-dependent activity checks include a pair of activity threshold values. ALPHA (α) and BETA (β), to determine whether sample values will be modified, and where the values of said activity thresholds are determined based on a pair of indices that are used to access the tables of these parameter values, these indices being calculated using the average quantization parameter, QP_{av}, used in coding the two blocks that neighbour the block boundary, as well as a pair of encoder-selected offset parameters that can be transmitted in a slice header or other high-level syntax structures of a video bitstream.

108. The method of claim **107**, wherein the values of said activity thresholds, ALPHA(α) and BETA (β) for each possible value of the indices Index_A (for α) or Index_B (for β) are

	Index_A (for α) or Index_B (for β)																											
	0	1	2	3	4	5	6	7	8	9	10	11	12	13	14	15	16	17	18	19	20	21	22	23	24	25	26	27	28
α	0	0	0	0	0	0	0	0	0	0	0	0	0	0	0	0	4	4	5	6	7	8	9	10	12	13	15	17	20
β	0	0	0	0	0	0	0	0	0	0	0	0	0	0	0	0	2	2	2	3	3	3	3	4	4	4	6	6	7

	Index_A (for α) or Index_B (for β)																						
	29	30	31	32	33	34	35	36	37	38	39	40	41	42	43	44	45	46	47	48	49	50	51
α	22	25	28	32	36	40	45	50	56	63	71	80	90	101	113	127	144	162	182	203	226	255	255
β	7	8	8	9	9	10	10	11	11	12	12	13	13	14	14	15	15	16	16	17	17	18	18.

(d) providing a pair of filter modes,

i) the first filter mode, a strong filtering mode consisting of a selection of a 3-tap filter sub-mode and an alternative 5-rap filter sub-mode with the selection between these two sub-modes made separately on each side of the block boundary based on the sample values on each line of samples across said block boundary,

ii) the second filter mode, a non-recursive default filtering mode; and

(c) selecting one of the pair of filter modes for filtering the samples,

wherein the second filter mode provides filtered output values based solely on unfiltered samples used as input data, and

wherein the following equations are used to compute the filtered sample values at the second position from the block boundary on either side, denoted P_1 and Q_1, for the luminance component on block boundaries upon which the second filter mode is applied:

$$P_1=p_1+\text{Clip}(-C0, C0, (p_2+(p_0+q_0)>>1-(p_1<<1))>>1)$$

$$Q_1=q_1+\text{Clip}(-C0, C0, (q_2+(p_0+q_0)>>1-(q_1<<1))>>1)$$

wherein p_0, p_1, p_2, q_0, q_1 and q_2 are unfiltered sample values across a block boundary.

106. The method of claim **105**, wherein the first filtering mode is used for filtering samples across a block boundary

109. The method of claim **106**, wherein said 5-tap filtering sub-made is applied on the left or upper side of the block boundary only if a first condition holds:

$$|p_2-p_0|<\text{BETA}\ (\beta)\ \text{AND}\ |p_0-q_0|<((\text{ALPHA}\ (\alpha)>>2)+2)$$

wherein p_0, p_2 and q_0 are unfiltered sample values across a block boundary.

110. The method of claim **105**, wherein output values P_0, P_1 and P_2 for the luminance component are computed using the following equations when said 5-tap filter sub-mode is applied:

$$P_0=(p_2*p_1+2*p_0+2*q_0+q_1+4)>>3$$

$$P_1=(p_2+p_1+p_0+q_0+2)>>2$$

$$P_2=(2*p_3+3*p_2+p_1+p_0+q_0+4)>>3$$

wherein p_0, p_1, p_2, p_3, q_0 and q_1 are unfiltered sample values across a block boundary.

111. The method of claim **106**, wherein said 5-tap filtering mode is applied on the right or lower side of the block boundary only if a second condition holds:

$$|q_2-q_0|<\text{BETA}\ (\beta)\ \text{AND}\ |p_0-q_0|<((\text{ALPHA}\ (\alpha)>>2)+2)$$

wherein p_0, q_0 and q_2 are unfiltered sample values across a block boundary.

112. The method of claim **105**, wherein said output values Q_0, Q_1, and Q_2 for the luminance component are computed using the following equations when said 5-tap filter sub-mode is applied:

$$Q_0=(q_2+2*q_1+2*q_0+2*p_0+p_1+4)>>3$$

$$Q_1=(q_2+q_1+q_0+p_0+2)>>2$$

$$Q_2=(2*q_3+3*q_2+q_1+q_0+p_0+4)>>3$$

wherein p_0, p_1, q_0, q_1, q_2 and q_3 are unfiltered sample values across a block boundary.

113. The method of claim **109**, wherein said 3-tap filtering mode is applied on the left or upper side of the block boundary whenever said first condition is not satisfied.

114. The method of claim **105**, wherein filtering using said 3-tap filtering sub-mode on the left or upper side of the block boundary consists of applying the following equation:

$$P_0=(2*p_1+p_0+q_1+2)>>2$$

wherein p_0, p_1 and q_1 are unfiltered sample values across a block boundary.

115. The method of claim **111**, wherein said 3-tap filtering mode is applied on the right or lower side of the block boundary whenever said second condition is not satisfied.

116. The method of claim **105**, wherein filtering using said 3-tap filtering mode on the right or lower side of the block boundary consists of applying the following equation:

$$Q_0=(2*q_1+q_0+p_1+2)>>2$$

wherein p_1, q_0 and q_1 are unfiltered sample values across a block boundary.

117. A method of filtering according to claim **107**, wherein variable index offsets are added to the average QP value, QP_{av}, in order to compute the indices that are used to address the tables of ALPHA (α) and BETA (β) values, such that

$$\text{Index}_A=\text{Clip}(QP_{min}, QP_{max}, QP_{av}+\text{Filter\_Offset\_}A)$$

$$\text{Index}_B=\text{Clip}(QP_{min}, QP_{max}, QP_{av}+\text{Filter\_Offset\_}B).$$

118. A method of filtering according to claim **105**, wherein the value of the C0 parameter used for clipping the change in the sample values when applying the default filtering mode is computed using the value of Index_A to address the table of C_0 values.

* * * * *