US011665493B2

(12) **United States Patent**
Usher et al.

(10) **Patent No.: US 11,665,493 B2**
(45) **Date of Patent: May 30, 2023**

(54) **ACOUSTIC SEALING ANALYSIS SYSTEM**

(71) Applicant: **Staton Techiya LLC**, Lighthouse Point, FL (US)

(72) Inventors: **John Usher**, Devon (GB); **John P. Keady**, Fairfax Station, VA (US)

(73) Assignee: **Staton Techiya LLC**, Delray Beach, FL (US)

(*) Notice: Subject to any disclaimer, the term of this patent is extended or adjusted under 35 U.S.C. 154(b) by 223 days.

(21) Appl. No.: **17/182,570**

(22) Filed: **Feb. 23, 2021**

(65) **Prior Publication Data**

US 2021/0176576 A1 Jun. 10, 2021

Related U.S. Application Data

(60) Continuation of application No. 16/838,277, filed on Apr. 2, 2020, now Pat. No. 10,979,836, which is a (Continued)

(51) **Int. Cl.**
H04R 29/00 (2006.01)
H04R 1/10 (2006.01)
H04R 25/00 (2006.01)

(52) **U.S. Cl.**
CPC ..... ***H04R 29/001*** (2013.01); ***H04R 1/1016*** (2013.01); ***H04R 1/1091*** (2013.01); (Continued)

(58) **Field of Classification Search**
CPC H04R 25/70; H04R 29/001; H04R 29/00; H04R 2460/15; H04R 1/1016; H04R 1/1091; H04R 2460/07
(Continued)

(56) **References Cited**

U.S. PATENT DOCUMENTS

3,876,843 A 4/1975 Moen
4,020,297 A 4/1977 Brodie
(Continued)

FOREIGN PATENT DOCUMENTS

CN 107071123 8/2017
EP 1519625 A2 3/2005
WO 2006037156 A1 4/2006

OTHER PUBLICATIONS

Olwal, A. and Feiner S. Interaction Techniques Using Prosodic Features of Speech and Audio Localization. Proceedings of IUI 2005 (International Conference on Intelligent User Interfaces), San Diego, CA, Jan. 9-12, 2005, p. 284-286.
(Continued)

Primary Examiner — Paul Kim
(74) *Attorney, Agent, or Firm* — Akerman LLP; Peter A. Chiabotti

(57) **ABSTRACT**

A device or a method using the device includes a balloon configured to seal a user's orifice, where the balloon is configured to produce an acoustic seal between a first side and a second side of the balloon in an ear canal. At least a second side of the balloon is fitted into the ear canal. Audio processing circuitry produces an audio signal for driving a speaker in the device and to measure sound level using output from the microphone in the device while the speaker is being driven by the audio signal. The device or method further includes control circuitry to evaluate a seal quality of the device. Other embodiments are disclosed.

20 Claims, 15 Drawing Sheets

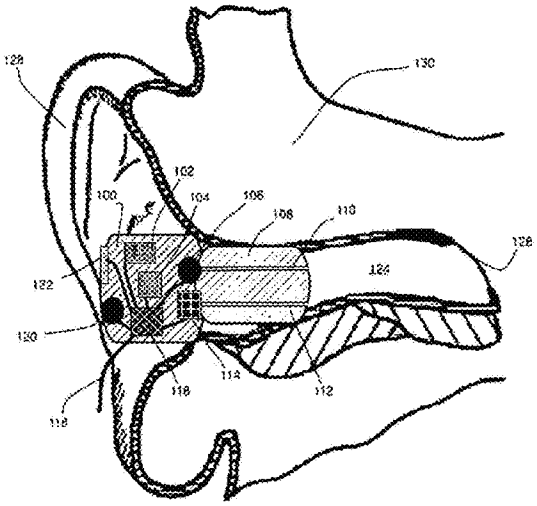

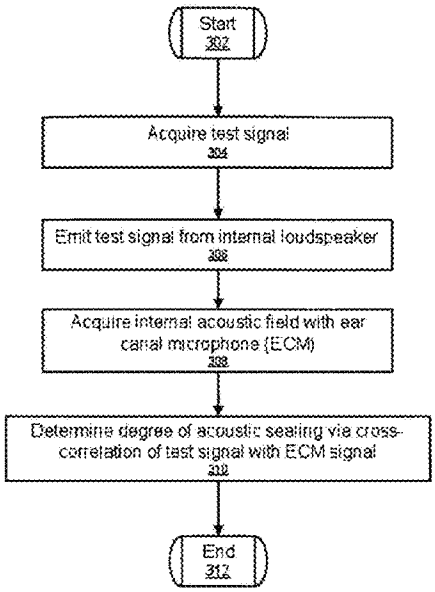

Related U.S. Application Data

continuation of application No. 16/414,136, filed on May 16, 2019, now Pat. No. 10,701,499, which is a continuation of application No. 15/700,511, filed on Sep. 11, 2017, now Pat. No. 10,299,053, which is a continuation of application No. 14/827,332, filed on Aug. 17, 2015, now Pat. No. 9,781,530, which is a continuation of application No. 14/054,015, filed on Oct. 15, 2013, now Pat. No. 9,113,267, which is a division of application No. 12/555,864, filed on Sep. 9, 2009, now Pat. No. 8,600,067.

(60) Provisional application No. 61/098,250, filed on Sep. 19, 2008.

(52) **U.S. Cl.**
CPC ***H04R 25/70*** (2013.01); ***H04R 29/00*** (2013.01); *H04R 2460/07* (2013.01); *H04R 2460/15* (2013.01)

(58) **Field of Classification Search**
USPC 381/58, 59, 60
See application file for complete search history.

(56) **References Cited**

U.S. PATENT DOCUMENTS

4,054,749 A 10/1977 Suzuki et al.
4,088,849 A 5/1978 Usami et al.
4,947,440 A 8/1990 Bateman et al.
5,002,151 A * 3/1991 Oliveira H04R 25/656 381/328
5,138,722 A 8/1992 Urella
5,142,587 A 8/1992 Kobayashi
5,208,867 A 5/1993 Stites, III
5,267,321 A 11/1993 Langberg
5,319,163 A 6/1994 Scott
5,524,056 A 6/1996 Killion et al.
5,712,453 A 1/1998 Bungardt
5,764,781 A 6/1998 Ding
5,903,868 A 5/1999 Yuen et al.
6,021,207 A 2/2000 Puthuff et al.
6,021,325 A 2/2000 Hall
6,163,338 A 12/2000 Johnson et al.
6,163,508 A 12/2000 Kim et al.
6,226,389 B1 5/2001 Lemelson et al.
6,298,323 B1 10/2001 Kaemmerer
6,321,070 B1 11/2001 Clark
6,359,993 B2 3/2002 Brimhall
6,400,652 B1 6/2002 Goldberg et al.
6,415,034 B1 7/2002 Hietanen
6,567,524 B1 * 5/2003 Svean A61F 11/08 381/317
RE38,351 E 12/2003 Iseberg et al.
6,661,901 B1 12/2003 Svean et al.
6,728,385 B2 4/2004 Kvaloy et al.
6,748,238 B1 6/2004 Lau
6,754,359 B1 6/2004 Svean et al.
6,804,638 B2 10/2004 Fiedler
6,804,643 B1 10/2004 Kiss
7,072,482 B2 7/2006 Van Doorn et al.
7,107,109 B1 9/2006 Nathan et al.
7,209,569 B2 4/2007 Boesen
7,430,299 B2 9/2008 Armstrong et al.
7,433,714 B2 10/2008 Howard et al.
7,450,730 B2 11/2008 Bertg et al.
7,477,756 B2 1/2009 Wickstrom et al.
7,562,020 B2 6/2009 Le et al.
7,688,983 B2 3/2010 Voix
7,756,285 B2 7/2010 Sjursen et al.
7,778,434 B2 8/2010 Juneau et al.
7,801,318 B2 9/2010 Barthel
7,920,557 B2 4/2011 Moote
8,014,553 B2 9/2011 Radivojevic et al.
8,401,200 B2 3/2013 Tiscareno
8,493,204 B2 7/2013 Wong et al.
8,550,206 B2 10/2013 Keady
8,750,295 B2 6/2014 Liron
8,774,433 B2 7/2014 Goldstein
8,774,435 B2 7/2014 Ambrose
8,971,561 B2 3/2015 Howes et al.
9,037,458 B2 5/2015 Park et al.
9,084,060 B2 7/2015 Liu
9,123,343 B2 9/2015 Kurki-Suonio
9,135,797 B2 9/2015 Couper et al.
9,293,128 B2 3/2016 Goldstein
9,313,572 B2 4/2016 Dusan et al.
10,860,287 B2 12/2020 Konagai
2001/0046304 A1 * 11/2001 Rast H04R 1/1083 381/26
2002/0106091 A1 8/2002 Furst et al.
2002/0118798 A1 8/2002 Langhart et al.
2003/0161097 A1 8/2003 Le et al.
2003/0165246 A1 9/2003 Kvaloy et al.
2004/0042103 A1 3/2004 Mayer
2004/0109668 A1 6/2004 Stuckman
2004/0125965 A1 7/2004 Alberth, Jr. et al.
2004/0190737 A1 9/2004 Kuhnel et al.
2004/0196992 A1 * 10/2004 Ryan H04R 1/10 381/317
2004/0203351 A1 10/2004 Shearer et al.
2005/0078838 A1 4/2005 Simon
2005/0096899 A1 * 5/2005 Padhi G10L 15/10 704/216
2005/0123146 A1 6/2005 Voix et al.
2005/0288057 A1 12/2005 Lai et al.
2006/0067551 A1 3/2006 Cartwright et al.
2006/0083395 A1 4/2006 Allen et al.
2006/0092043 A1 5/2006 Lagassey
2006/0195322 A1 8/2006 Broussard et al.
2006/0204014 A1 9/2006 Isenberg et al.
2007/0019817 A1 * 1/2007 Siltmann H04R 25/305 381/60
2007/0043563 A1 2/2007 Comerford et al.
2007/0086600 A1 4/2007 Boesen
2007/0189544 A1 8/2007 Rosenberg
2007/0291953 A1 12/2007 Ngia et al.
2008/0037801 A1 2/2008 Alves et al.
2008/0165988 A1 7/2008 Terlizzi et al.
2009/0010456 A1 1/2009 Goldstein et al.
2009/0024234 A1 1/2009 Archibald
2010/0061564 A1 3/2010 Clemow et al.
2010/0296668 A1 11/2010 Lee et al.
2011/0096939 A1 4/2011 Ichimura
2011/0264447 A1 10/2011 Visser et al.
2011/0293103 A1 12/2011 Park et al.
2013/0177179 A1 7/2013 Ambrose
2014/0247948 A1 9/2014 Goldstein
2014/0247952 A1 9/2014 Goldstein
2016/0104452 A1 4/2016 Guan et al.
2018/0176681 A1 6/2018 Asada

OTHER PUBLICATIONS

Bernard Widrow, John R. Glover Jr., John M. McCool, John Kaunitz, Charles S. Williams, Robert H. Hearn, James R. Zeidler, Eugene Dong Jr, and Robert C. Goodlin, Adaptive Noise Cancelling: Principles and Applications, Proceedings of the IEEE, vol. 63, No. 12, Dec. 1975.

Mauro Dentino, John M. McCool, and Bernard Widrow, Adaptive Filtering in the Frequency Domain, Proceedings of the IEEE, vol. 66, No. 12, Dec. 1978.

Samsung Electronics Co., Ltd., and Samsung Electronics, America, Inc., v. *Staton Techiya, LLC*, IPR2022-00282, Dec. 21, 2021.

Samsung Electronics Co., Ltd., and Samsung Electronics, America, Inc., v. *Staton Techiya, LLC*, IPR2022-00242, Dec. 23, 2021.

Samsung Electronics Co., Ltd., and Samsung Electronics, America, Inc., v. *Staton Techiya, LLC*, IPR2022-00243, Dec. 23, 2021.

Samsung Electronics Co., Ltd., and Samsung Electronics, America, Inc., v. *Staton Techiya, LLC*, IPR2022-00234, Dec. 21, 2021.

(56) **References Cited**

OTHER PUBLICATIONS

Samsung Electronics Co., Ltd., and Samsung Electronics, America, Inc., v. *Staton Techiya, LLC*, IPR2022-00253, Jan. 18, 2022.
Samsung Electronics Co., Ltd., and Samsung Electronics, America, Inc., v. *Staton Techiya, LLC*, IPR2022-00324, Jan. 13, 2022.
Samsung Electronics Co., Ltd., and Samsung Electronics, America, Inc., v. *Staton Techiya, LLC*, IPR2022-00281, Jan. 18, 2022.
Samsung Electronics Co., Ltd., and Samsung Electronics, America, Inc., v. *Staton Techiya, LLC*, IPR2022-00302, Jan. 13, 2022.
Samsung Electronics Co., Ltd., and Samsung Electronics, America, Inc., v. *Staton Techiya, LLC*, IPR2022-00369, Feb. 18, 2022.
Samsung Electronics Co., Ltd., and Samsung Electronics, America, Inc., v. *Staton Techiya, LLC*, IPR2022-00388, Feb. 18, 2022.
Samsung Electronics Co., Ltd., and Samsung Electronics, America, Inc., v. *Staton Techiya, LLC*, IPR2022-00410, Feb. 18, 2022.
U.S. Appl. No. 90/015,146, Samsung Electronics Co., Ltd. and Samsung Electronics, America, Inc., Request for Ex Parte Reexamination of U.S. Pat. No. 10,979,836.

* cited by examiner

FIG 1

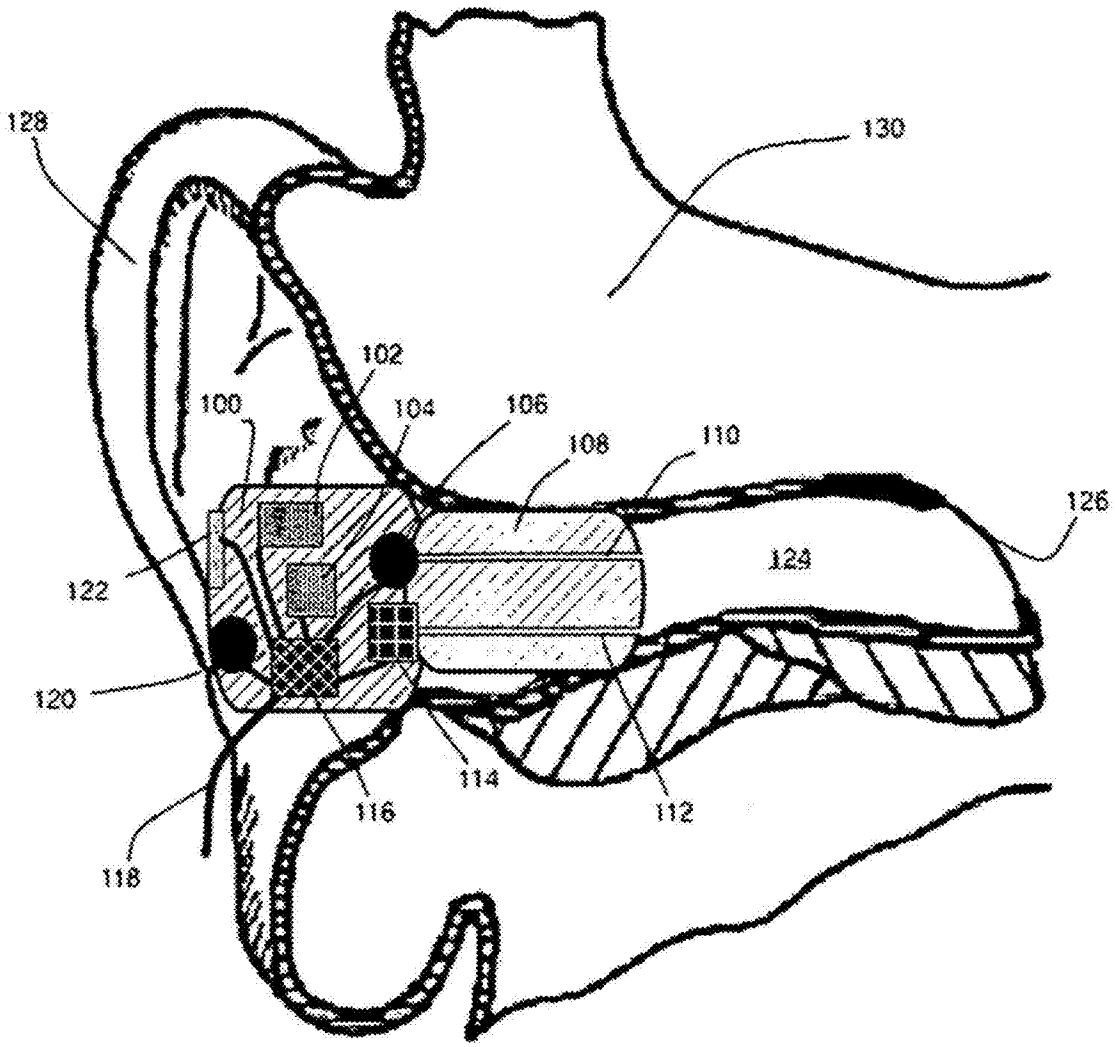

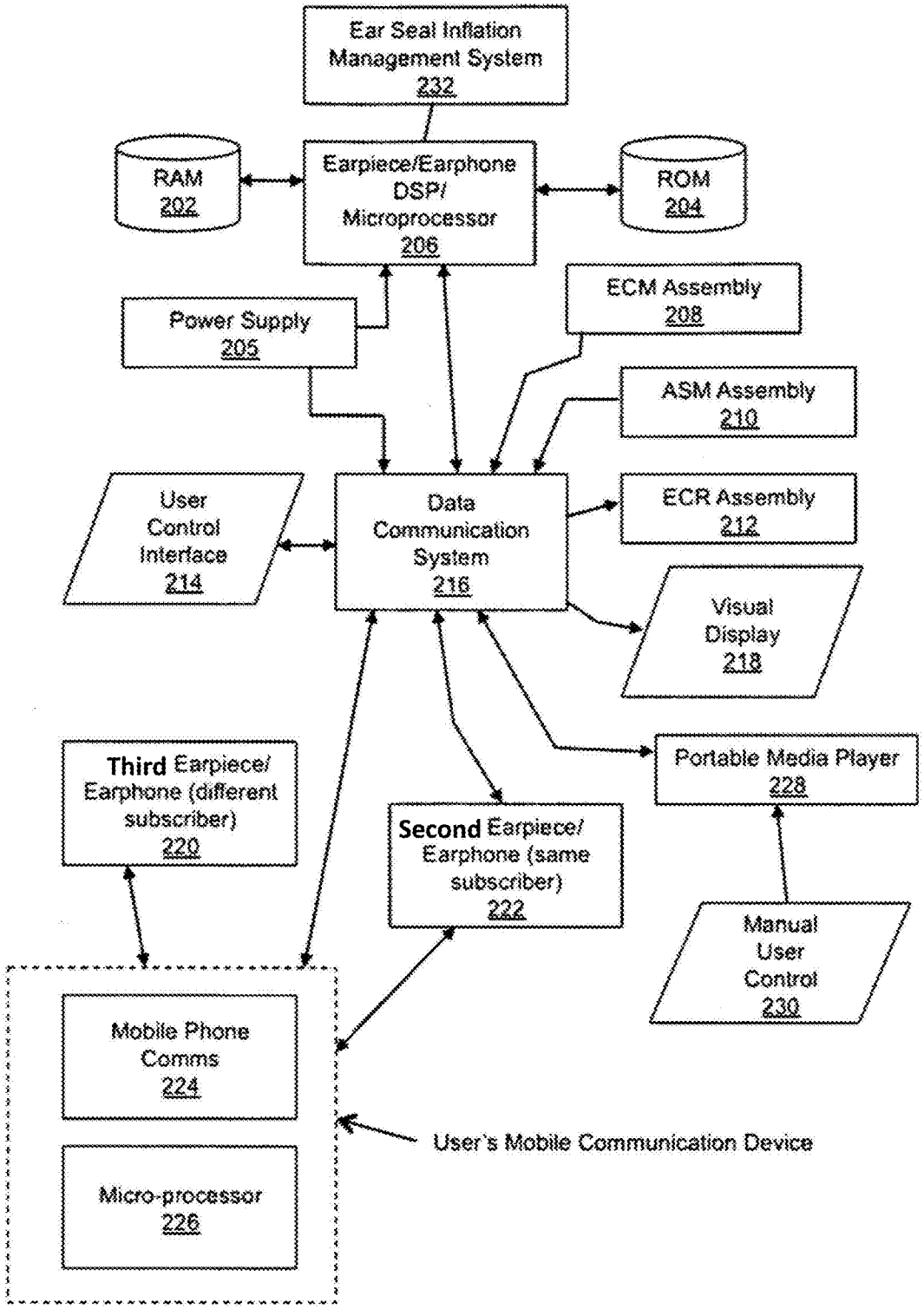
Ear Seal Inflation Management System 232
RAM 202
Earpiece/Earphone DSP/ Microprocessor 206
ROM 204
Power Supply 205
ECM Assembly 208
ASM Assembly 210
User Control Interface 214
Data Communication System 216
ECR Assembly 212
Visual Display 218
Portable Media Player 228
Third Earpiece/ Earphone (different subscriber) 220
Second Earpiece/ Earphone (same subscriber) 222
Manual User Control 230
Mobile Phone Comms 224
Micro-processor 226
User's Mobile Communication Device

FIG. 2

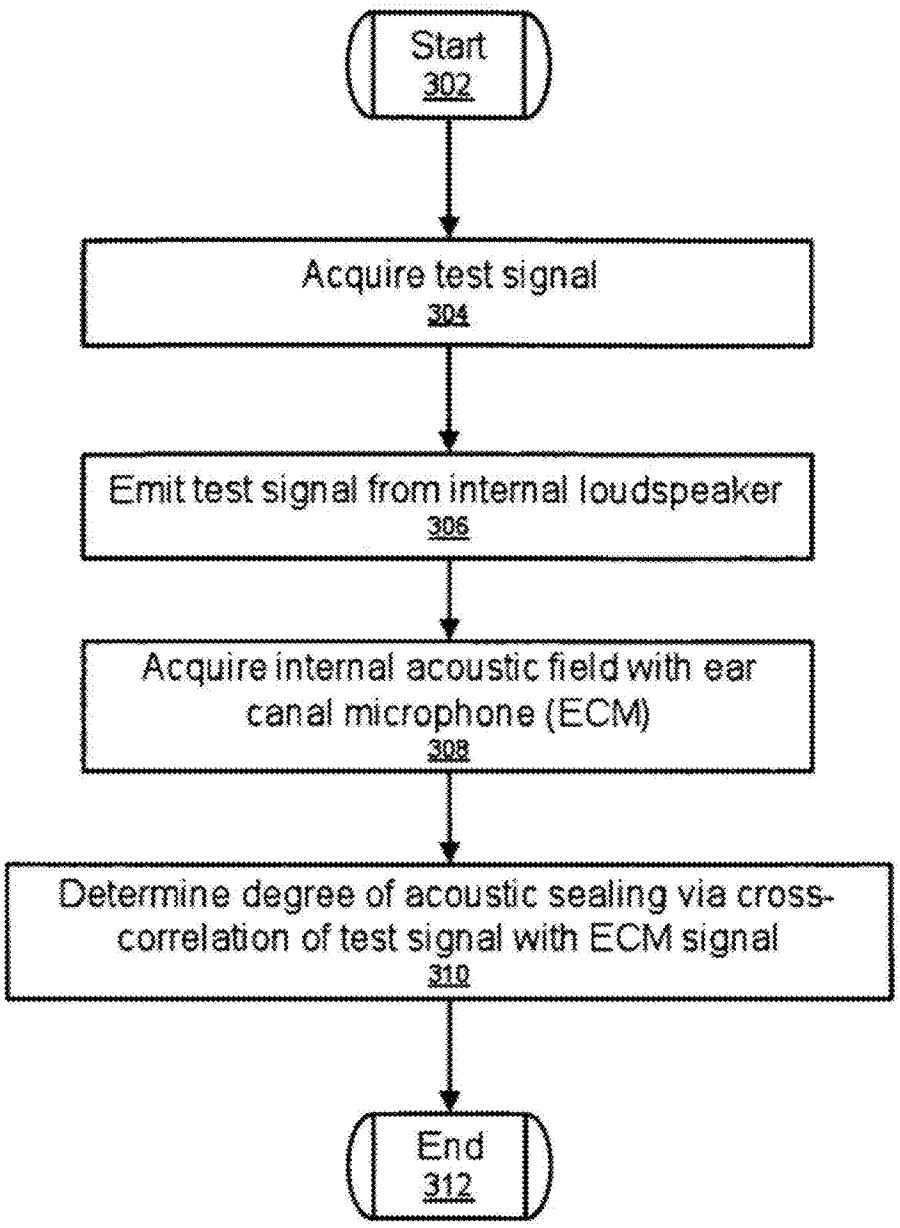
Start
302
Acquire test signal
304
Emit test signal from internal loudspeaker
306
Acquire internal acoustic field with ear canal microphone (ECM)
308
Determine degree of acoustic sealing via cross-correlation of test signal with ECM signal
310
End
312

FIG. 3

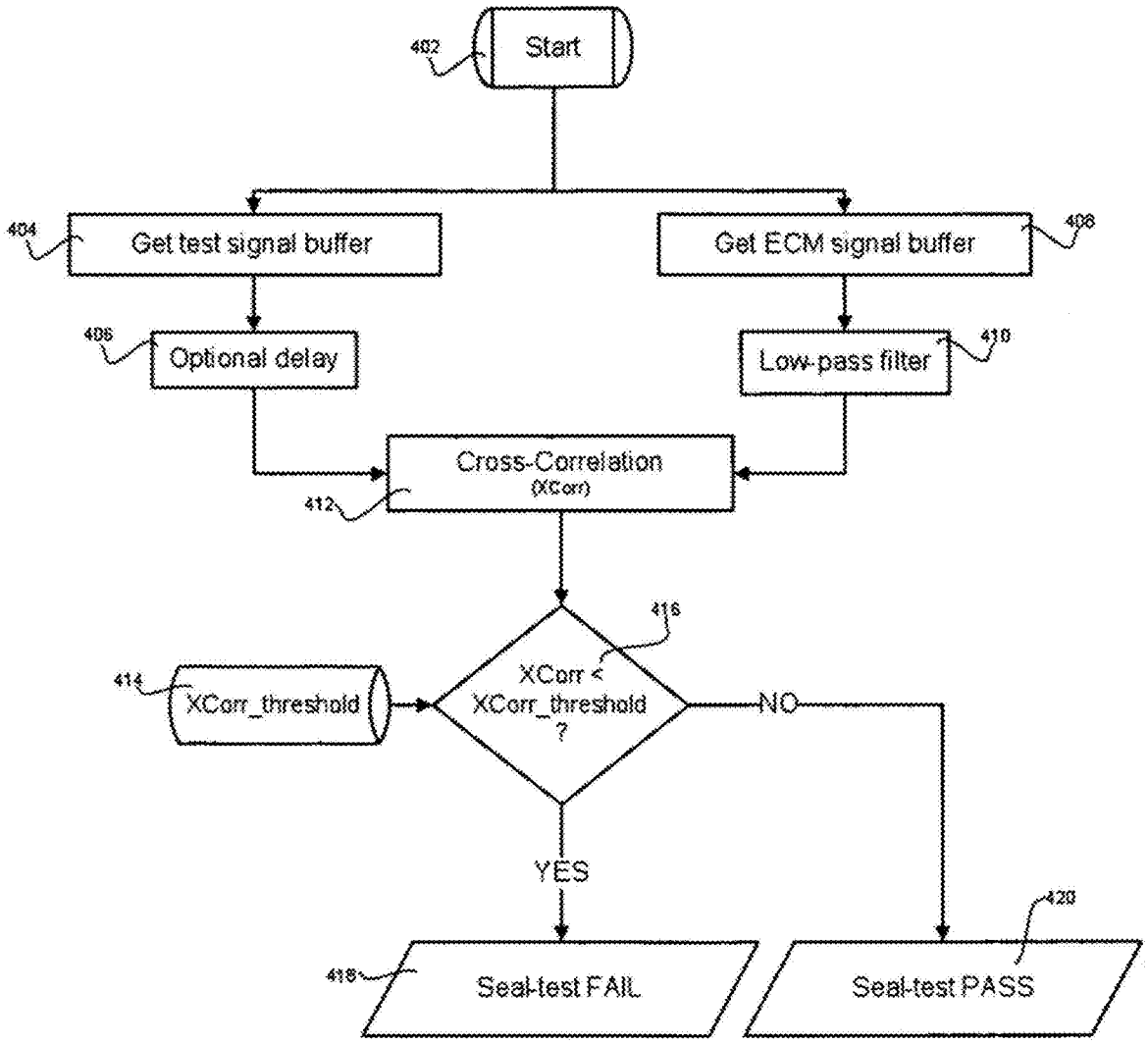
402
Start
404
Get test signal buffer
408
Get ECM signal buffer
406
Optional delay
410
Low-pass filter
Cross-Correlation
(XCorr)
412
416
414
XCorr_threshold
XCorr <
XCorr_threshold
?
NO
YES
420
418
Seal-test FAIL
Seal-test PASS

FIG. 4

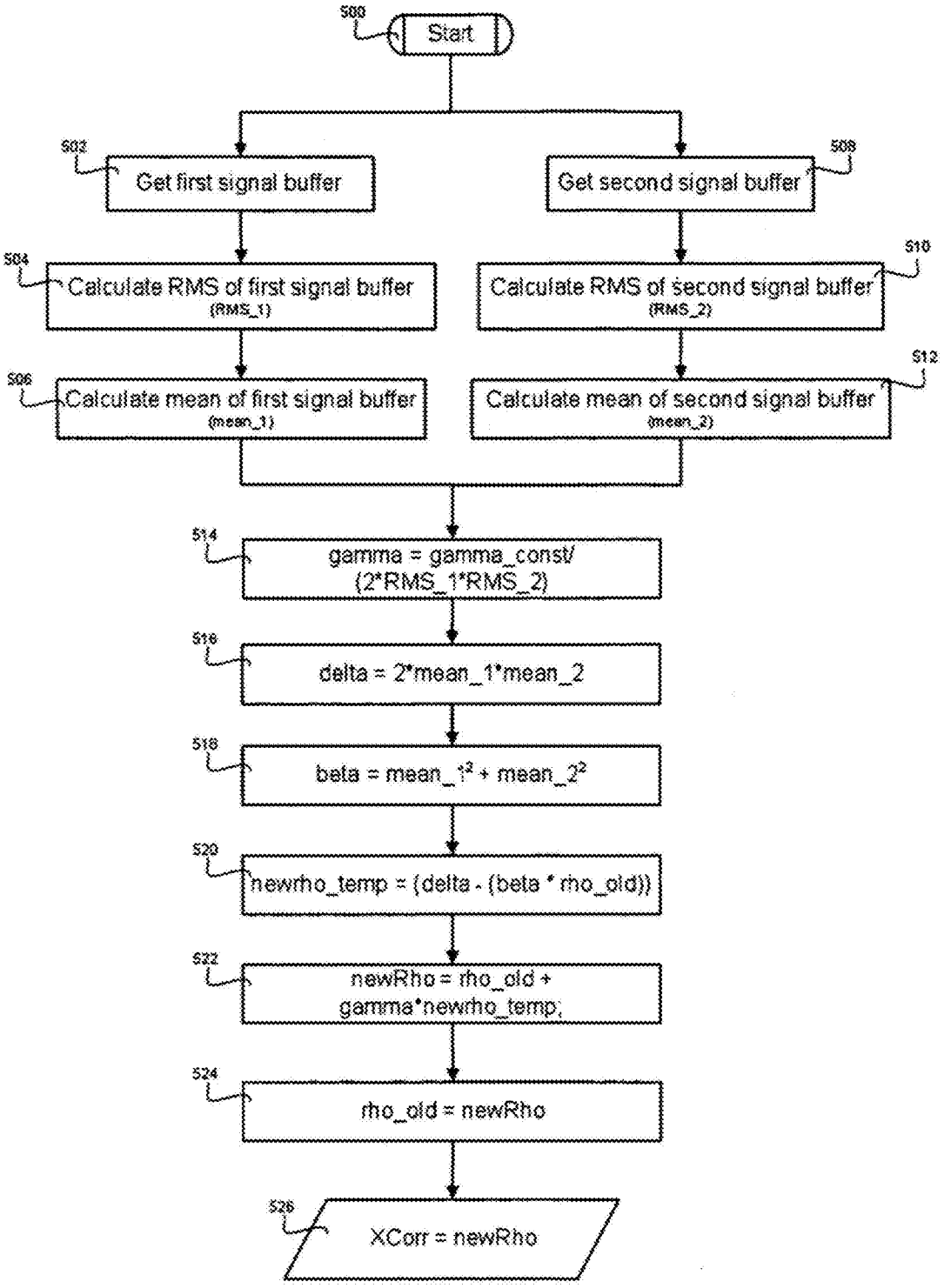
500
Start
502
Get first signal buffer
508
Get second signal buffer
504
Calculate RMS of first signal buffer
(RMS_1)
510
Calculate RMS of second signal buffer
(RMS_2)
506
Calculate mean of first signal buffer
(mean_1)
512
Calculate mean of second signal buffer
(mean_2)
514
gamma = gamma_const/
(2*RMS_1*RMS_2)
516
delta = 2*mean_1*mean_2
518
beta = mean_1² + mean_2²
520
newrho_temp = (delta - (beta * rho_old))
522
newRho = rho_old +
gamma*newrho_temp;
524
rho_old = newRho
526
XCorr = newRho

FIG.5

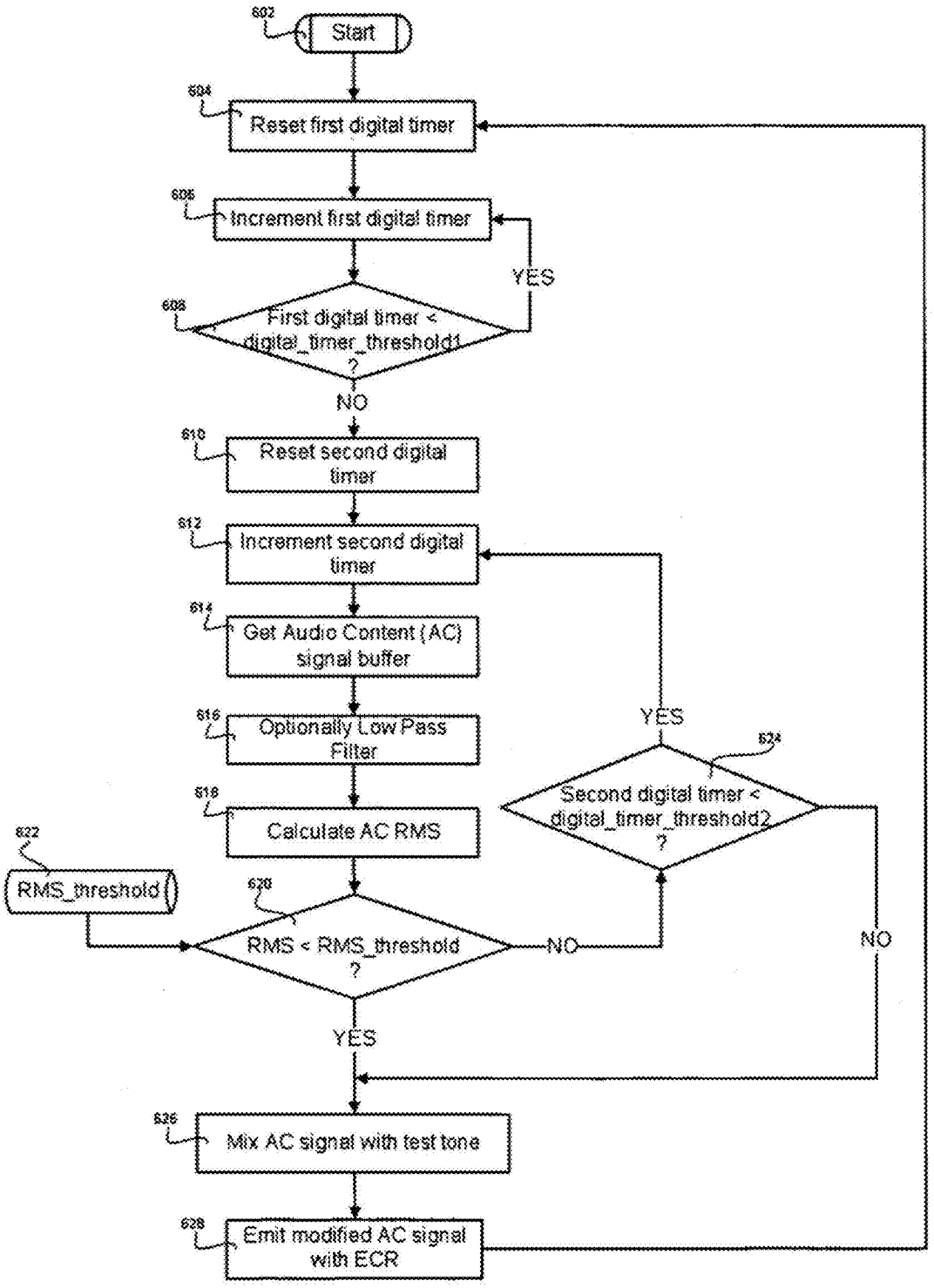
602
Start
604
Reset first digital timer
606
Increment first digital timer
608
First digital timer < digital_timer_threshold1 ?
YES
NO
610
Reset second digital timer
612
Increment second digital timer
614
Get Audio Content (AC) signal buffer
616
Optionally Low Pass Filter
618
Calculate AC RMS
622
RMS_threshold
620
RMS < RMS_threshold ?
NO
YES
624
Second digital timer < digital_timer_threshold2 ?
YES
NO
626
Mix AC signal with test tone
628
Emit modified AC signal with ECR

FIG. 6

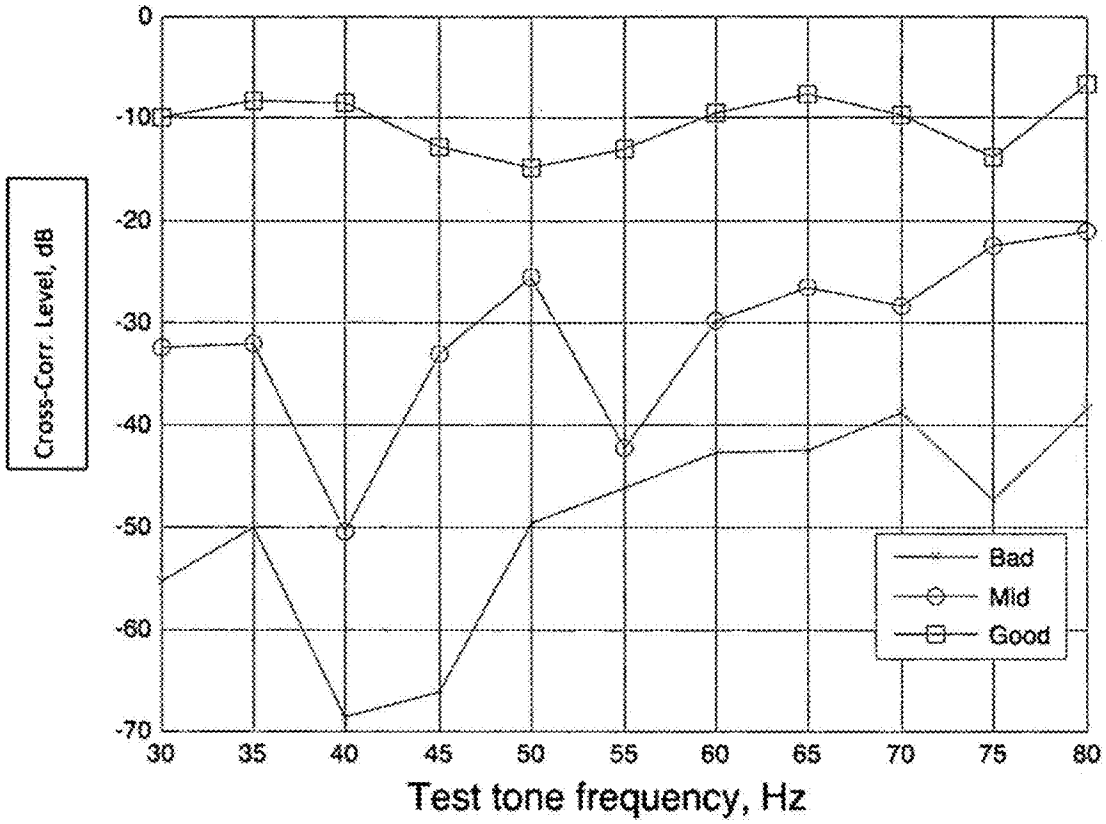
0
-10
-20
-30
-40
-50
-60
-70
Cross-Corr. Level, dB
30
35
40
45
50
55
60
65
70
75
80
Test tone frequency, Hz
Bad
Mid
Good

FIG. 7

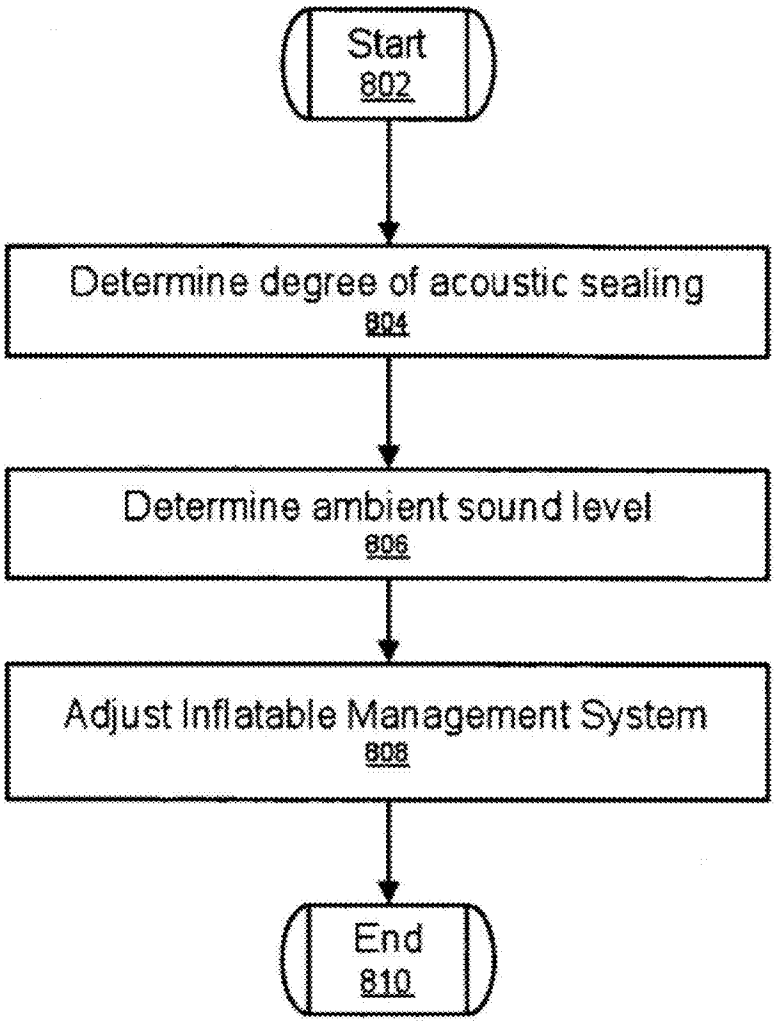
Start
802
Determine degree of acoustic sealing
804
Determine ambient sound level
806
Adjust Inflatable Management System
808
End
810

FIG. 8

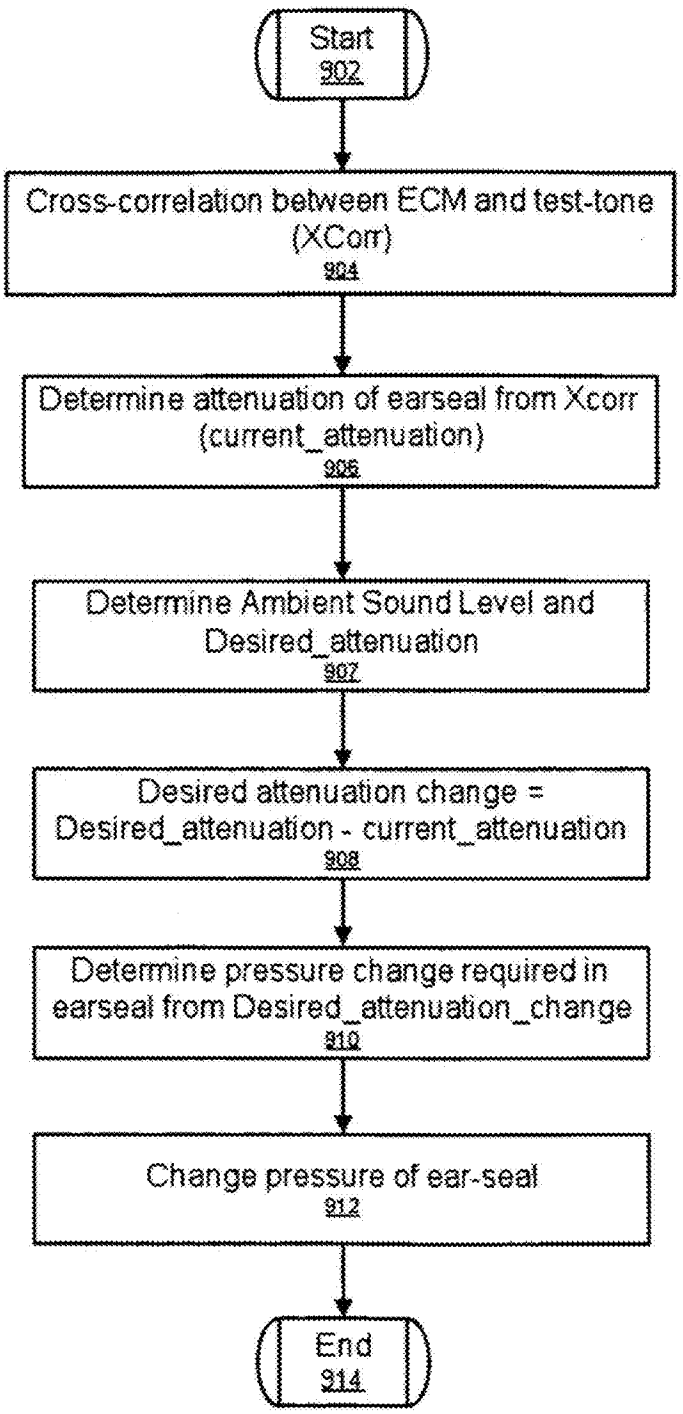
Start
902
Cross-correlation between ECM and test-tone (XCorr)
904
Determine attenuation of earseal from Xcorr (current_attenuation)
906
Determine Ambient Sound Level and Desired_attenuation
907
Desired attenuation change = Desired_attenuation - current_attenuation
908
Determine pressure change required in earseal from Desired_attenuation_change
910
Change pressure of ear-seal
912
End
914

FIG. 9

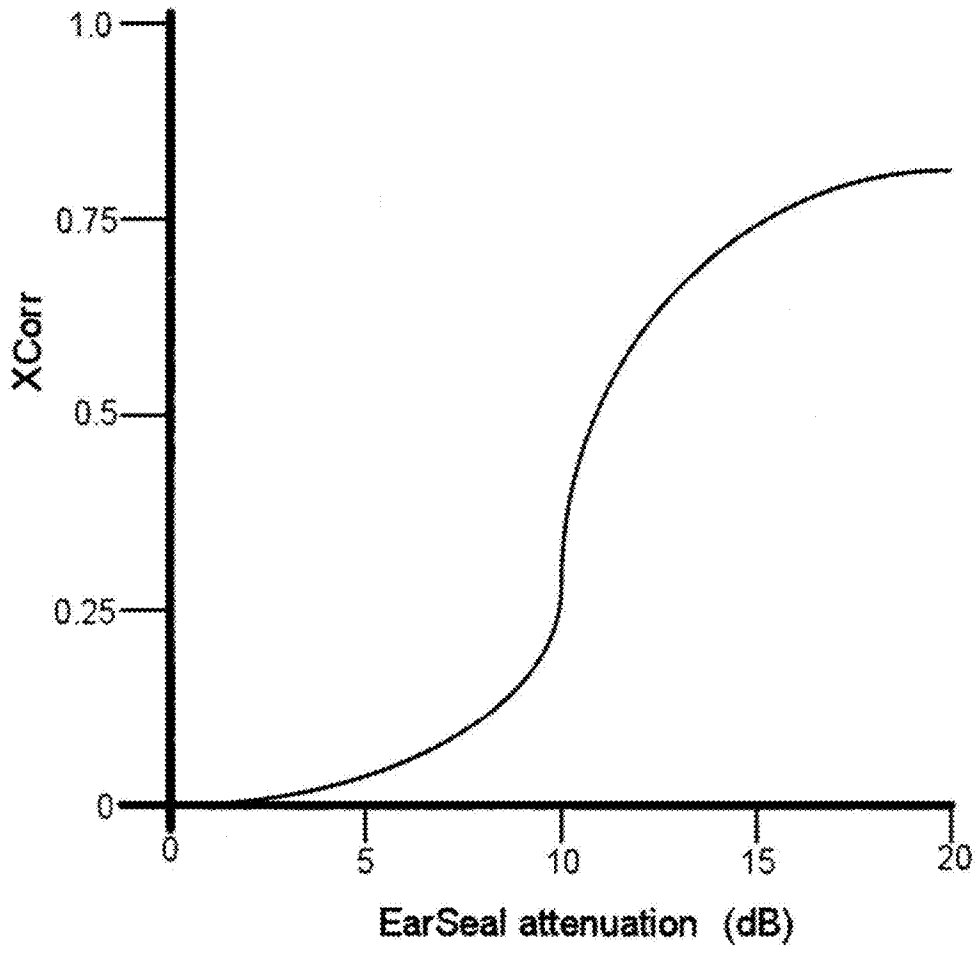

FIG. 10

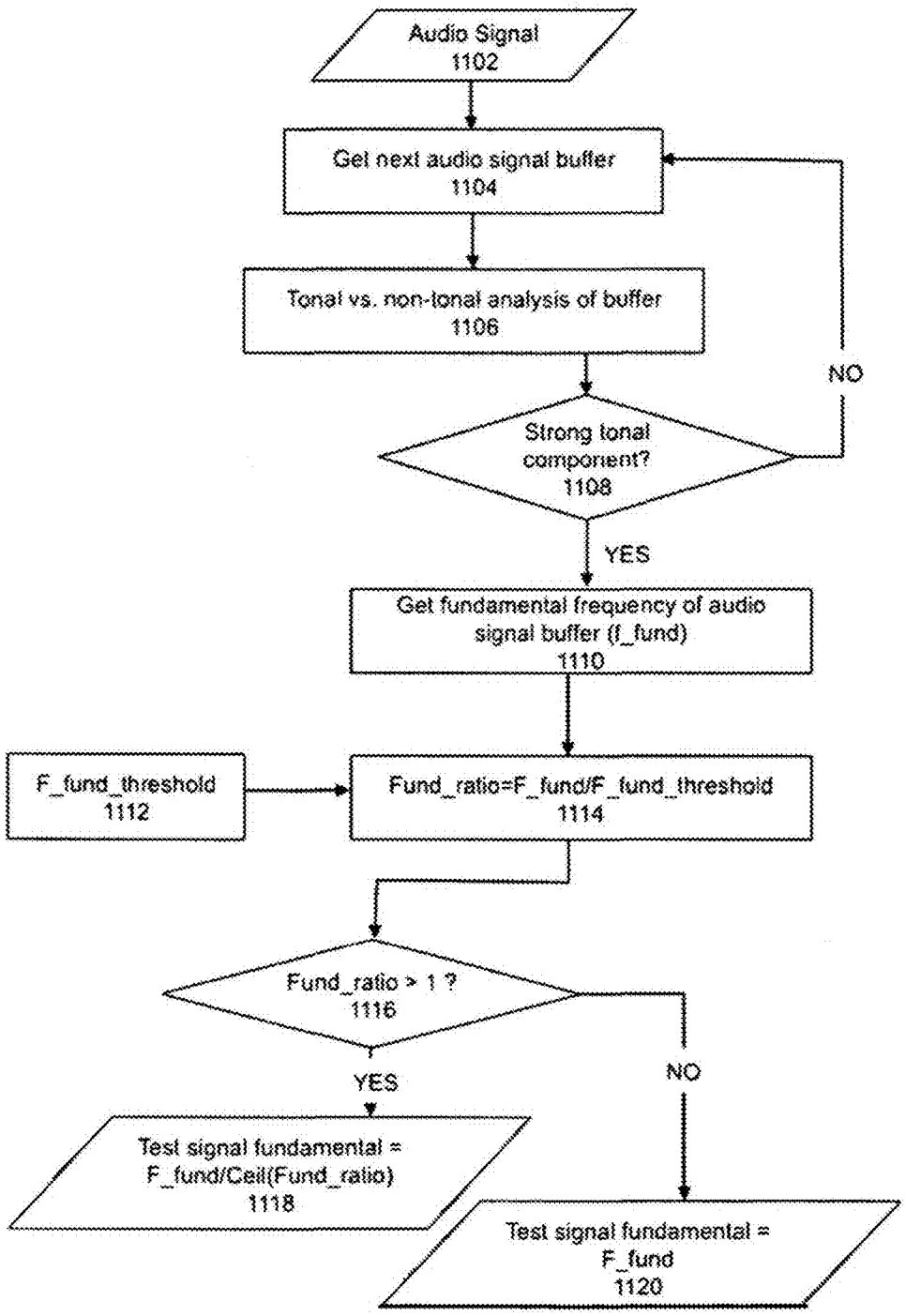
Audio Signal
1102
Get next audio signal buffer
1104
Tonal vs. non-tonal analysis of buffer
1106
NO
Strong tonal component?
1108
YES
Get fundamental frequency of audio signal buffer (f_fund)
1110
F_fund_threshold
1112
Fund_ratio=F_fund/F_fund_threshold
1114
Fund_ratio > 1 ?
1116
YES
NO
Test signal fundamental = F_fund/Ceil(Fund_ratio)
1118
Test signal fundamental = F_fund
1120

FIG. 11

Fig. 12

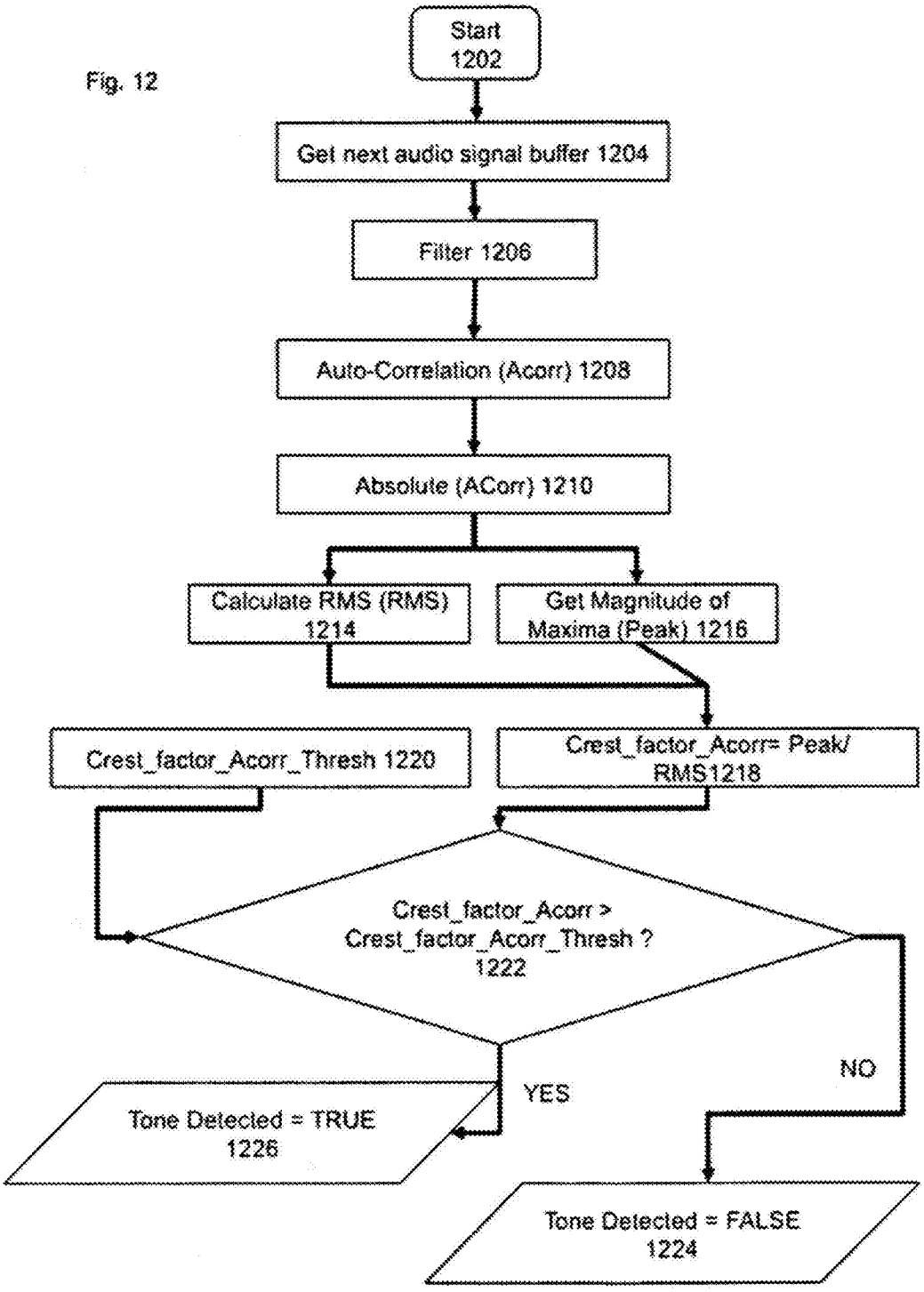
Start
1202
Get next audio signal buffer 1204
Filter 1206
Auto-Correlation (Acorr) 1208
Absolute (ACorr) 1210
Calculate RMS (RMS)
1214
Get Magnitude of
Maxima (Peak) 1216
Crest_factor_Acorr_Thresh 1220
Crest_factor_Acorr= Peak/
RMS1218
Crest_factor_Acorr >
Crest_factor_Acorr_Thresh ?
1222
YES
NO
Tone Detected = TRUE
1226
Tone Detected = FALSE
1224

Fig. 13

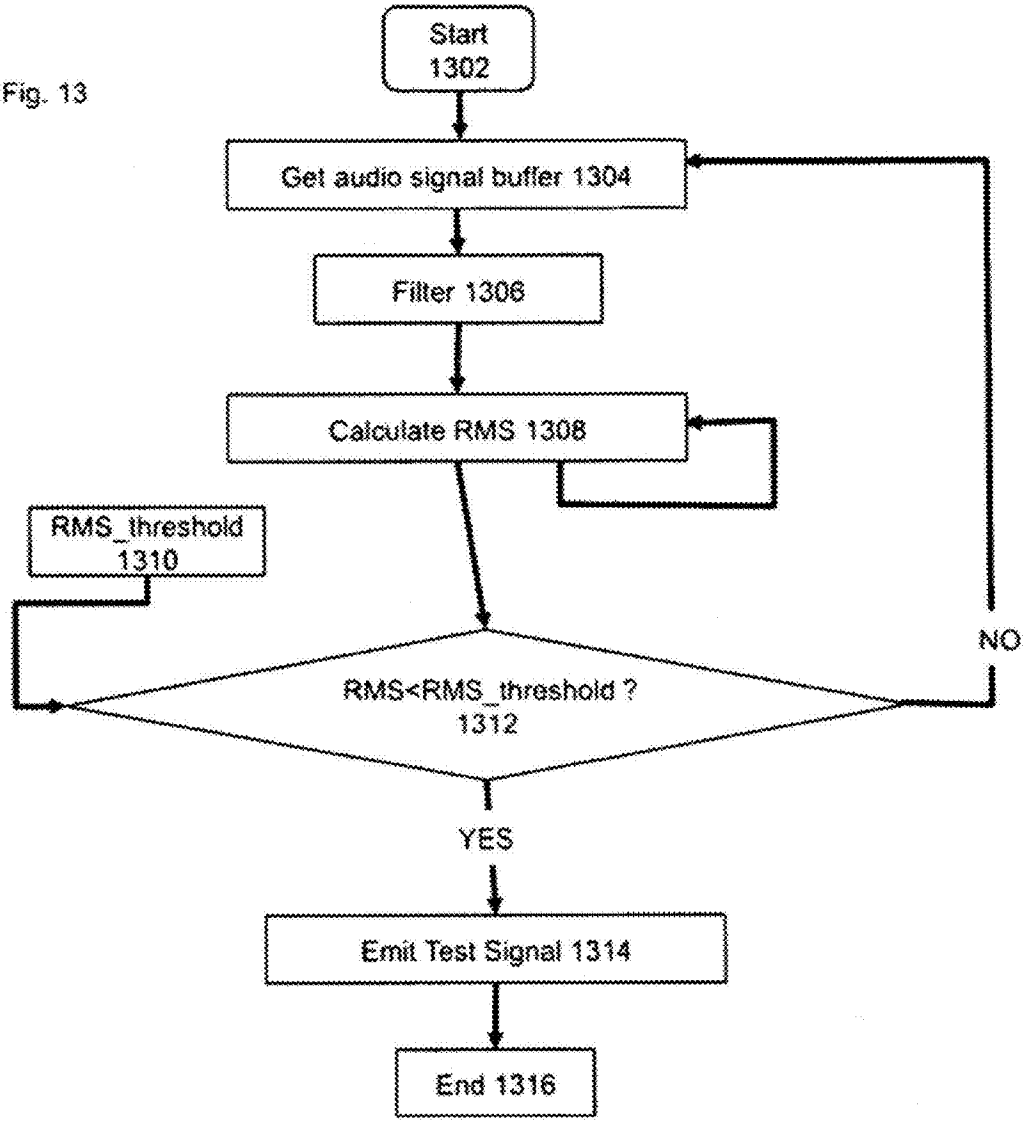
Start
1302
Get audio signal buffer 1304
Filter 1306
Calculate RMS 1308
RMS_threshold
1310
RMS<RMS_threshold ?
1312
NO
YES
Emit Test Signal 1314
End 1316

Fig. 14

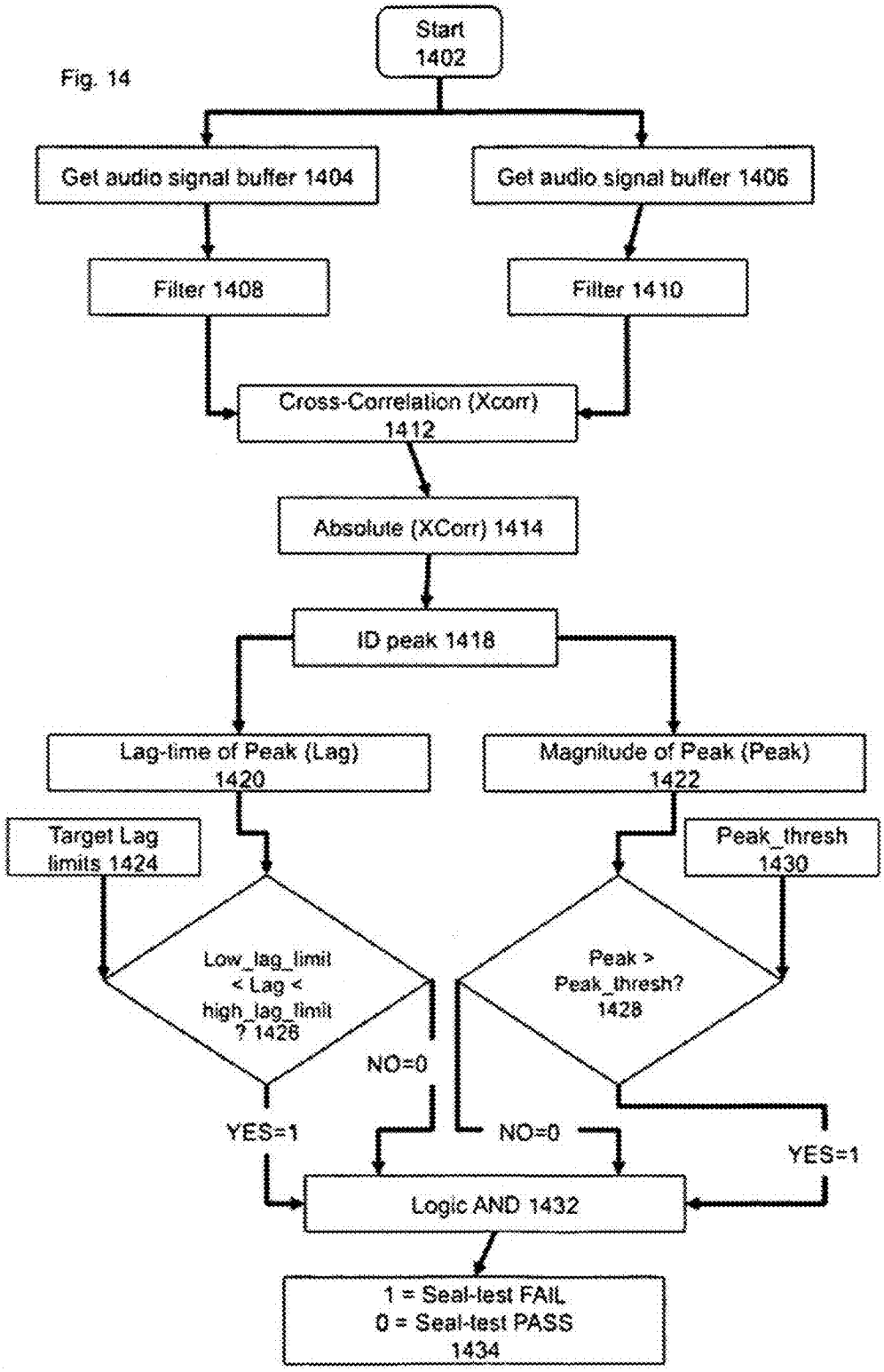
Start
1402
Get audio signal buffer 1404
Get audio signal buffer 1406
Filter 1408
Filter 1410
Cross-Correlation (Xcorr)
1412
Absolute (XCorr) 1414
ID peak 1418
Lag-time of Peak (Lag)
1420
Magnitude of Peak (Peak)
1422
Target Lag
limits 1424
Peak_thresh
1430
Low_lag_limit
< Lag <
high_lag_limit
? 1428
Peak >
Peak_thresh?
1428
NO=0
YES=1
NO=0
YES=1
Logic AND 1432
1 = Seal-test FAIL
0 = Seal-test PASS
1434

FIG. 15A

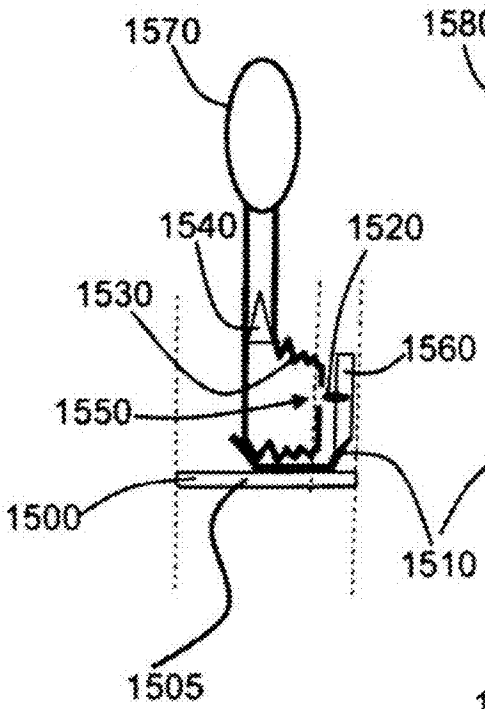

FIG. 15B

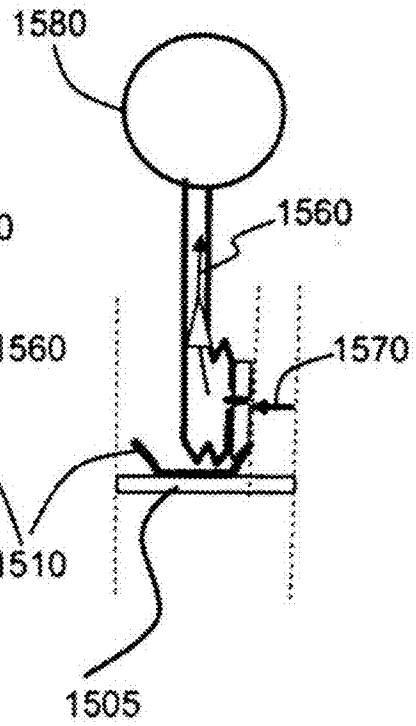

FIG. 16

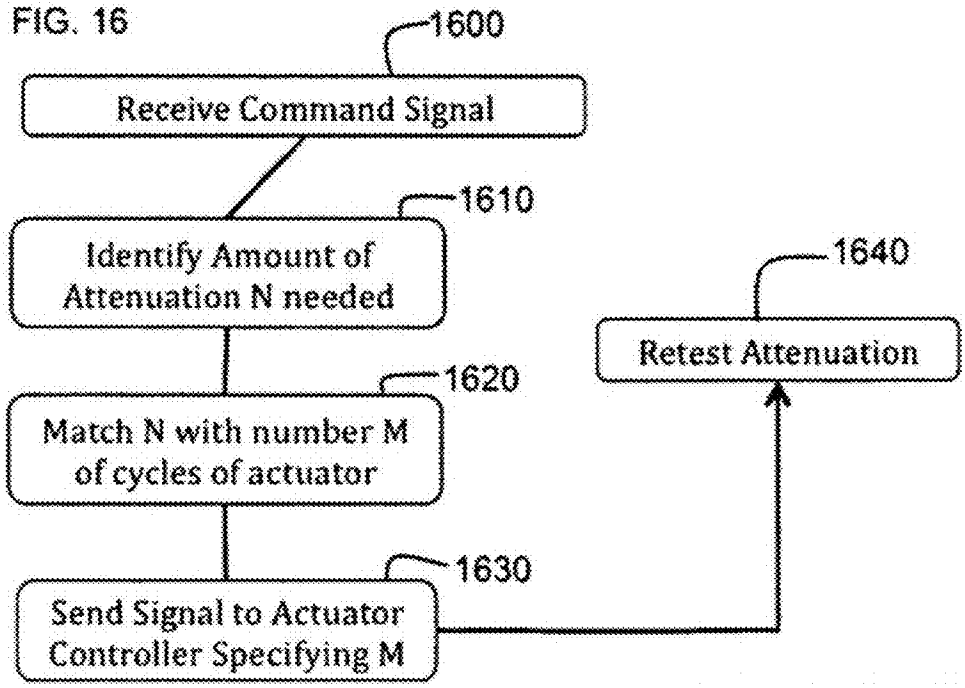

ACOUSTIC SEALING ANALYSIS SYSTEM

CROSS-REFERENCE TO RELATED APPLICATIONS

This application is a continuation of U.S. patent application Ser. No. 16/838,277, filed Apr. 2, 2020, which is a continuation of U.S. patent application Ser. No. 16/414,136, filed May 16, 2019, which is a continuation of U.S. patent application Ser. No. 15/700,511, filed Sep. 11, 2017, which is a continuation of U.S. patent application Ser. No. 14/827,332, filed Aug. 17, 2015, now U.S. Pat. No. 9,781,530, which is a continuation of U.S. patent application Ser. No. 14/054,015, filed Oct. 15, 2013, now U.S. Pat. No. 9,113,267, which is a Divisional Application of U.S. application Ser. No. 12/555,864, filed Sep. 9, 2009, now U.S. Pat. No. 8,600,067 and claims the benefit of U.S. Provisional Patent Application No. 61/098,250 filed Sep. 19, 2008. The disclosure of all the aforementioned references are incorporated herein by reference in their entirety.

FIELD OF THE INVENTION

The present invention relates to testing the seal of an orifice-inserted device, and more particularly, though not exclusively, to a device and method for determining if an earpiece is sealed correctly in an ear canal.

BACKGROUND OF THE INVENTION

It can be difficult to communicate using an earpiece or earphone device in the presence of high-level background sounds. In many earpiece designs a transducer is placed near the ear canal opening. Ambient sound from the surrounding environment enters the ear canal with the audio content from the transducer. Environmental sounds such as traffic, construction, and nearby conversations can degrade the quality of the audio content.

Although audio processing technologies can adequately suppress noise, the earpiece is generally sound agnostic and cannot differentiate sounds. Thus, one method to prevent ambient sound from entering the ear is to seal or provide an acoustic barrier at the opening of the ear canal. Sealing minimizes ambient sound leakage into the ear canal, and under the correct conditions can provide a level of noise suppression under high background noise conditions. Certain types of acoustic software (e.g., communication in a noisy environment via an ear canal microphone) may require some minimum noise isolation from the ambient sound to provide adequate performance to the user. Additionally, user conditions may change substantially during the operation of the earpiece, and in some circumstances, the earpiece may become misaligned or may be fit incorrectly such that it is not sealed correctly. A method of seal detection is needed to optimize performance.

SUMMARY OF THE INVENTION

Broadly stated, embodiments are directed to a device and method to determine if an earpiece is sealing within the design specification of the device.

In one embodiment, the device can include a sealing section forming an acoustic barrier between a first volume and a second volume. An ear canal receiver (ECR) can be configured to generate an acoustic signal in the first volume. An Ear Canal Microphone (ECM) in the first volume can be configured to measure the acoustic signal in the first volume.

The first acoustic signal emitted by the ECR can be cross-correlated with the first acoustic signal detected with the ECM to determine if the sealing section is sealed properly.

At least one exemplary embodiment is directed to a method of detecting sealing integrity of an earpiece comprising the steps of: providing a test signal; generating an acoustic signal corresponding to the test signal incident on an ear canal side of a sealing section; converting the acoustic signal incident on a first side of the sealing section to an electrical signal; and cross-correlating the test signal to the electrical signal where the earpiece is sealed correctly when a cross-correlation between the test signal and the electrical signal is above a threshold.

At least one exemplary embodiment is directed to a method of adjusting attenuation of an earpiece comprising the steps of: relating cross-correlation of a test signal and a measured acoustic signal in an ear canal of a user to an attenuation level of a sealing section of the earpiece; comparing the attenuation level of the sealing section of the earpiece to a minimum attenuation value; and adjusting a pressure of the sealing section to meet the minimum attenuation value.

At least one exemplary embodiment is directed to a device comprising: a sealing section configured to seal a user's orifice, where the sealing section is configured to produce an acoustic seal between a first side of the sealing section and a second side of the sealing section; a transducer configured to generate a first acoustic signal incident on the first side of the sealing section; and a first microphone configured to measure a second acoustic signal incident on the second side of the sealing section, where the second acoustic signal includes at least a portion of the first acoustic signal that has passed from the first side to the second side of the sealing section where the first acoustic signal is compared to the second acoustic signal to determine if the sealing section is sealed.

Further areas of applicability of exemplary embodiments of the present invention will become apparent from the detailed description provided hereinafter. It should be understood that the detailed description and specific examples, while indicating exemplary embodiments of the invention, are intended for purposes of illustration only and are not intended to limit the scope of the invention.

BRIEF DESCRIPTION OF THE DRAWINGS

Exemplary embodiments of the present invention will become more fully understood from the detailed description and the accompanying drawings, wherein:

FIG. **1** is a diagram of an earpiece inserted in an ear canal in accordance with an exemplary embodiment;

FIG. **2** is a block diagram of optional components of an earpiece in accordance with an exemplary embodiment;

FIG. **3** is a flowchart of a method for checking an ear seal in accordance with an exemplary embodiment;

FIG. **4** is a flowchart to determine acoustic seal integrity of an earpiece in accordance with the exemplary embodiment.

FIG. **5** is a flowchart of a method to estimate the instantaneous cross-correlation between a first and second audio signal.

FIG. **6** is a flowchart to determine when to emit a test signal in accordance with an exemplary embodiment;

FIG. **7** is a graph illustrating different seal measurements in accordance with the present invention;

FIG. **8** is a block diagram for a method of adjusting the IMS system in accordance with at least one exemplary embodiment;

FIG. **9** is a block diagram for a method of adjusting IMS pressure in accordance with at least one exemplary embodiment;

FIG. **10** illustrates a sample relationship between EarSeal attenuation and XCorr in accordance with at least one exemplary embodiment;

FIG. **11** illustrates a flowchart of an exemplary method to determine a test signal fundamental;

FIG. **12** illustrates a flowchart of an exemplary embodiment to determine tonal presence in audio content;

FIG. **13** illustrates a flowchart of a method to determine when to emit the test signal;

FIG. **14** illustrates a flowchart of an exemplary method to determine acoustic seal integrity;

FIGS. **15**A and **15**B illustrate a method of varying the seal of an inflation system in accordance with at least one exemplary embodiment; and

FIG. **16** illustrates the sending of a signal to an inflation controller upon detection of a seal fail to modify the seal pressure in accordance with at least one exemplary embodiment.

DETAILED DESCRIPTION

The following description of exemplary embodiment(s) is merely illustrative in nature and is in no way intended to limit the invention, its application, or uses.

Exemplary embodiments are directed to or can be operatively used on various wired or wireless orifice inserted devices for example earpiece devices (e.g., earbuds, headphones, ear terminals, behind the ear devices or other acoustic devices as known by one of ordinary skill, and equivalents).

Processes, techniques, apparatus, and materials as known by one of ordinary skill in the art may not be discussed in detail but are intended to be part of the enabling description where appropriate. For example specific computer code may not be listed for achieving each of the steps discussed, however one of ordinary skill would be able, without undo experimentation, to write such code given the enabling disclosure herein. Such code is intended to fall within the scope of at least one exemplary embodiment.

Additionally exemplary embodiments are not limited to earpieces, for example some functionality can be implemented on other systems with speakers and/or microphones for example computer systems, PDAs, BlackBerry® smart phones, cell and mobile phones, and any other device that emits or measures acoustic energy. Additionally, exemplary embodiments can be used with digital and non-digital acoustic systems. Additionally various receivers and microphones can be used, for example MEMs transducers, diaphragm transducers, for example Knowles' FG and EG series transducers.

Notice that similar reference numerals and letters refer to similar items in the following figures, and thus once an item is defined in one figure, it may not be discussed or further defined in the following figures.

In all of the examples illustrated and discussed herein, any specific values, for example the sound pressure level change, should be interpreted to be illustrative only and non-limiting. Thus, other examples of the exemplary embodiments could have different values.

Note that herein when referring to correcting or preventing an error or damage (e.g., hearing damage), a reduction of the damage or error and/or a correction of the damage or error are intended.

At least one exemplary embodiment of the invention is directed to an earpiece for sealing or partially sealing an ear. FIG. **1** is a diagram of an earpiece inserted in an ear canal **124** in accordance with at least one exemplary embodiment of the invention. FIG. **1** also illustrates portions of the ear including pinna **128**, ear canal **124** and eardrum **126**. As illustrated, the earpiece comprises an electronic housing unit **100** and a sealing unit **108**. The earpiece depicts an electro-acoustical assembly for an in-the-ear acoustic assembly, as it would typically be placed in an ear canal **124** of a user **130**. The earpiece is an in-ear earpiece, behind the ear earpiece, receiver in the ear, partial-fit device, or any other suitable earpiece type. The earpiece can partially or fully occlude the ear canal **124**.

The earpiece includes an Ambient Sound Microphone (ASM) **120** to capture ambient sound, an Ear Canal Receiver (ECR) **114** to deliver audio to an ear canal **124**, and an Ear Canal Microphone (ECM) **106** to capture and assess a sound exposure level within the ear canal **124**. The earpiece can partially or fully occlude the ear canal **124** to provide various degrees of acoustic isolation. The assembly is designed to be inserted into the user's ear canal **124**, and to form an acoustic seal with the walls of the ear canal **124** at a location between the entrance to the ear canal **124** and the tympanic membrane (or ear drum) **126**. In general, such a seal is typically achieved by means of a soft and compliant housing of the sealing unit **108**. Additionally, the sealing unit **108** can be a pressurized expandable element that fills a portion of the available local space.

Sealing unit **108** is an acoustic barrier having a first side corresponding to ear canal **124** and a second side corresponding to the ambient environment. In at least one exemplary embodiment, sealing unit **108** includes an ear canal microphone tube **110** and an ear canal receiver tube **112**. Sealing unit **108** creates a closed cavity of approximately 5 cc or less between the first side of sealing unit **108** and the tympanic membrane **126** in ear canal **124**. In at least one exemplary embodiment the sealing facilitates using the ECR (speaker) **114** to generate a full range bass response when reproducing sounds for the user. This seal also serves to significantly reduce the sound pressure level at the user's eardrum **126** resulting from the sound field at the entrance to the ear canal **124**. This seal is also a basis for a sound isolating performance of the electro-acoustic assembly.

In at least one exemplary embodiment and in broader context, the second side of sealing unit **108** corresponds to the side adjacent to electronic housing unit **100**. Ambient sound microphone **120** is housed in electronic housing unit **100** and is exposed to the ambient environment for receiving sound from the ambient environment around the user.

The electronic housing unit **100** can include various system components such as a microprocessor **116**, memory **104**, battery **102**, ECM **106**, ASM **120**, ECR, **114**, and user interface **122**, or these components can reside in a separate system or interface operatively connected. Microprocessor **116** (or processor **116**) can be a logic circuit, a digital signal processor, controller, or the like for performing calculations and operations for the earpiece. Microprocessor **116** is operatively coupled to memory **104**, ECM **106**, ASM **120**, ECR **114**, and user interface **122**. An optional wire **118** can provide an external connection to the earpiece. Battery **102** powers the circuits and transducers of the earpiece. Battery **102** can be a rechargeable or replaceable battery.

In at least one exemplary embodiment, electronic housing unit **100** is adjacent to sealing unit **108**. Openings in electronic housing unit **100** receive ECM tube **110** and ECR tube **112** to respectively couple to ECM **106** and ECR **114**. ECR tube **112** and ECM tube **110** acoustically couple signals to and from ear canal **124**. For example, ECR **114** outputs an acoustic signal through ECR tube **112** and into ear canal **124** where it is received by the tympanic membrane **126** of the user of the earpiece. Conversely, ECM **106** receives an acoustic signal present in ear canal **124** though ECM tube **110**.

One function of ECM **106** is that of measuring the sound pressure level in the ear canal cavity **124** as a part of testing the hearing acuity of the user as well as confirming the integrity of the acoustic seal and the working condition of the earpiece. In one arrangement, ASM **120** is used to monitor sound pressure at the entrance to the occluded or partially occluded ear canal **124**. All transducers shown can receive or transmit audio signals to a processor **116** that undertakes audio signal processing and provides a transceiver for audio via the wired (wire **118**) or a wireless communication path. Note also that the acoustic signals can be stored for later retrieval.

In at least one exemplary embodiment the earpiece can be constructed to actively monitor a sound pressure level both inside and outside an ear canal **124**. In at least one exemplary embodiment monitored data can be used to enhance spatial and timbral sound quality while maintaining supervision to ensure safe sound reproduction levels. In at least one exemplary embodiment an earpiece can facilitate at least one of conducting listening tests, filtering sounds in the environment, monitoring warning sounds in the environment, presenting notification based on identified warning sounds, maintaining constant audio content to ambient sound levels, and filtering sound in accordance with a Personalized Hearing Level (PHL).

The earpiece can generate an Ear Canal Transfer Function (ECTF) to model the ear canal **124** using ECR **114** and ECM **106**, as well as an Outer Ear Canal Transfer function (OETF) using ASM **120**. For instance, the ECR **114** can deliver an impulse within the ear canal **124** and generate the ECTF via cross correlation of the impulse with the impulse response of the ear canal **124**. The earpiece can also determine a sealing profile with the user's ear to compensate for any leakage. In at least one exemplary embodiment the earpiece can use either the ASM **120** or the ECM **106** to monitor the sound pressure level, which can then be used in a Sound Pressure Level Dosimeter calculation, to estimate sound exposure and recovery times. This permits the earpiece to safely administer and monitor sound exposure to the ear.

Referring to FIG. **2**, a block diagram of an earpiece **201** in accordance with an exemplary embodiment is shown. A power supply **205** (e.g., USB power connection, hearing aid battery (batteries)) powers components of the earpiece **201** including microprocessor **206** (or processor **206**, e.g., Texas Instruments TMS320C6713) and a data communication system **216** (e.g., RF or Bluetooth communication chip). As illustrated, the earpiece **201** includes the processor **206** operatively coupled to data communication system **216**, ASM **210**, ECR **212**, and ECM **208**. Data communication system **216** may include one or more Analog to Digital Converters and Digital to Analog Converters (DAC). The processor **206** can utilize computing technologies such as a microprocessor, Application Specific Integrated Chip (ASIC), and/or digital signal processor (DSP) with associated Random Access Memory (RAM) **202** and Read Only Memory (ROM) **204**. Other memory types such as Flash, non-volatile memory, SRAM, DRAM or other like technologies can be used for storage with processor **206**. The processor **206** can also include a clock to record a time stamp.

In general, data communication system **216** is a communication pathway to components of the earpiece **201** and components external to the earpiece **201**. The communication link can be wired or wireless. In at least one exemplary embodiment, data communication system **216** is configured to communicate with ECM **208**, ASM **210**, visual display **218**, and user control interface **214** of the earpiece **201**. As shown, user control interface **214** can be wired or wirelessly connected. In at least one exemplary embodiment, data communication system **216** is capable of communication to devices exterior to the earpiece **201** such as the user's mobile phone **234**, a second earpiece **222**, and a portable media player **228**. Portable media player **228** can be controlled by a manual user control **230**.

The user's mobile phone **234** includes a mobile phone communication system **224**. A microprocessor **226** is operatively coupled to mobile phone communication system **224**. As illustrated multiple devices can be wirelessly connected to one another such as an earpiece **220** worn by another person to the user's mobile phone. Similarly, the user's mobile phone **234** can be connected to the data communication system **216** of the earpiece **201** as well as the second earpiece **222**. This connection would allow one or more people to listen and respond to a call on the user's mobile phone **234** through their respective earpieces.

As illustrated, a data communication system **216** can include a voice operated control (VOX) module to provide voice control to one or more subsystems, such as a voice recognition system, a voice dictation system, a voice recorder, or any other voice related processor. The VOX module can also serve as a switch to indicate to the subsystem a presence of spoken voice and a voice activity level of the spoken voice. The VOX can be a hardware component implemented by discrete or analog electronic components or a software component. In one arrangement, the processor **206** can provide functionality of the VOX by way of software, such as program code, assembly language, or machine language.

The RAM **202** stores program instructions for execution on the processor **206** as well as captured audio processing data. For instance, memory RAM **202** and ROM **204** can be off-chip and external to the processor **206** and include a data buffer to temporarily capture the ambient sound and the internal sound, and a storage memory to save from the data buffer the recent portion of the history in a compressed format responsive to a directive by the processor. In at least one exemplary embodiment, the data buffer can be a circular buffer that temporarily stores audio sound at a current time point to a previous time point. It should also be noted that the data buffer is operatively connected with processor **206** to provide high speed data access. The storage memory can be non-volatile memory such as SRAM to store captured or compressed audio data.

Data communication system **216** includes an audio interface operatively coupled to the processor **206** and the VOX to receive audio content, for example from portable media player **228**, a cell phone, or any other communication device, and deliver the audio content to the processor **206**. The processor **206** responsive to detecting voice-operated events from the VOX can adjust the audio content delivered to the ear canal of the user of the earpiece. For instance, the processor **206** (or the VOX of data communication system **216**) can lower a volume of the audio content responsive to

detecting an event for transmitting the acute sound to the ear canal of the user. The processor **206** by way of the ECM **208** can also actively monitor the sound exposure level inside the ear canal and adjust the audio to within a safe and subjectively optimized listening level range based on voice operating decisions made by the VOX of data communication system **216**.

The earpiece **201** and data communication system **216** can further include a transceiver that can support singly or in combination any number of wireless access technologies including without limitation Bluetooth™, Wireless Fidelity (WiFi), Worldwide Interoperability for Microwave Access (WiMAX), and/or other short or long range communication protocols. The transceiver can also provide support for dynamic downloading over-the-air to the earpiece **201**. It should be noted also that next generation access technologies can also be used in exemplary embodiments.

Data communication system **216** can also include a location receiver that utilizes common technology such as a common GPS (Global Positioning System) receiver that can intercept satellite signals and therefrom determine a location fix of the earpiece **201**.

The power supply **205** utilizes common power management technologies such as replaceable batteries, supply regulation technologies, and charging system technologies for supplying energy to the components of the earpiece **201** and to facilitate portable applications. A motor (not shown) can be a single supply motor driver coupled to the power supply **205** to improve sensory input via haptic vibration. As an example, the processor **206** can direct the motor to vibrate responsive to an action, such as a detection of a warning sound or an incoming voice call.

Microprocessor **206** is operatively connected with an EarSeal Inflation Management System **232** to control the degree to which the sealing unit **108** is inflated or deflated. In one exemplary embodiment, sealing unit **108** comprises an expandable element (e.g., inflatable balloon mechanism), whereby a cavity can be filled with air or a liquid to change the degree of acoustic isolation between the internal ear canal space **124** and the ambient environment. Alternately, a passive system for sealing ear canal **124** is used such as a flexible rubber or a silicon sealing unit or a foam plug. In one exemplary embodiment, the passive system is a balloon mechanism that is filled with air or liquid. The balloon mechanism conforms to the shape and size of an ear canal and includes a restorative force module that applies a pressure to the balloon mechanism for sealing the ear canal cavity.

The earpiece is a single operational device or a family of devices configured in a master-slave arrangement, for example, a mobile device and an earpiece. In the latter embodiment, the components of the earpiece are reused in different form factors for the master and slave devices.

Referring to FIG. **3**, a flowchart illustrates a method for an acoustic sealing analysis system in accordance with an exemplary embodiment. In general, a first volume is acoustically isolated from a second volume. The test determines if the two volumes have sufficient acoustic isolation from one another. For example, cars are designed to have a quiet interior. Users of an automobile do not want to be subjected to the noise of the external environment. Thus, a car interior (first volume) is acoustically isolated from the external environment outside of the automobile. Similarly, an earpiece having a sealing unit such as described in FIG. **1** will create a first volume (the ear canal) that is acoustically isolated from the ambient environment of the user (second volume). In either example, the acoustic sealing analysis system determines if there is sufficient acoustic isolation for the application. In the earpiece example, random or periodic testing of the seal may be beneficial because a new seal is formed in the ear canal when the device is put in the ear or it may shift over time depending on user activity.

The method begins at step **302**. A test signal is acquired in a step **304**. For example, the test signal can be stored in memory or generated by a microprocessor. The test signal is provided to the acoustic transducer. The acoustic transducer or loudspeaker (such as an ECR) emits an acoustic signal corresponding to the test signal within the first volume in a step **306**. The acoustic field in the first volume is detected by an Ear Canal Microphone (ECM) in a step **308**. The acoustic loading on both the ECR and ECM will change depending on the degree of acoustic sealing, thereby affecting the degree magnitude of the radiated ECR signal detected by the ECM. In general, as the degree of ear seal decreases, the effect of lumped air mass coupled to the ECR and ECM will decrease thereby increasing in Thevenin capacitance, which effectively reduces the transfer of low frequency emitted sound from the ECR to the ECM.

In one exemplary embodiment, the test signal and the acoustic signal emitted by the loudspeaker into the first volume is a single frequency sine wave signal for testing leakage from one volume to another.

The degree of sealing between the first and second acoustic volumes is determined in a step **310** and the process ends at step **312**. The cross-correlation between the emitted test signal and detected ECM signal is taken. In at least one exemplary embodiment, the test signal and the measured acoustic signal emitted by the loudspeaker are conditioned using a time delay and frequency dependent filter. The ear-seal is determined to be low (or "leaky") if the cross-correlated signals are below a predetermined value. In at least one exemplary embodiment, automatic adjustments to the sealing section are made (such as deflating and re-inflating the sealing balloon to reseal the sealing section including retesting). Alternately, an audible sound, vocal response, or visual response can be provided to let the user know that the earpiece is sealed correctly or incorrectly.

Referring to FIG. **1**, the earpiece is used as an example to illustrate a test sequence as disclosed in FIG. **3**. Sealing unit **108** occludes an opening of ear canal **124** creating a first volume (ear canal **124**) and a second volume (the ambient environment). Sealing unit **108** has a first side exposed to ear canal **124** and a second side is exposed to or corresponds to the ambient environment external to the ear.

In at least one exemplary embodiment, processor **116** is configured to receive a test signal in memory **104**. Processor **116** generates the test signal and provides the test signal to Ear Canal Receiver **114** (ECR **114**). ECR **114** emits the test signal into Ear Canal Receiver Tube (ECR Tube **112**). The test signal propagates through ECR tube **112** and into ear canal **124**. Ear Canal Microphone tube **110** (ECM tube **110**) is configured to receive an acoustic signal incident on the first side of sealing unit **108**. The test signal in ear canal **124** propagates through ECM tube **110** and is received by Ear Canal Microphone **106** (ECM **106**). ECM **106** is configured to measure the test signal in ear canal **124** and provide the measured test signal to processor **116**.

As shown, electronic housing unit **100** of the earpiece is adjacent to the second side of sealing unit **108**. Electronic housing unit **100** is exposed to the ambient environment and for purposes of acoustic sealing analysis is considered the second side of sealing unit **108**. Electronic housing unit **100** includes Ambient Sound Microphone **120** (ASM **120**), which is configured to measure sounds in the ambient

environment. Thus, ASM **120** receives and measures an ambient signal corresponding to a signal incident on the second side of sealing unit **108**. ASM **120** provides the measured ambient signal to processor **116**.

Ideally, sealing unit **108** is an acoustic barrier preventing the test signal or very little of the test signal from getting past sealing unit **108** and into the ambient environment. Conversely, sealing unit **108** if improperly sealed will pass some of the test signal. Processor **116** compares the test signal to the signal provided by ECM **106** corresponding to the acoustic signal in ear canal **124**. In particular, processor **116** undertakes the cross-correlation between emitted test signal and the ECM signal.

Referring to FIG. **4**, a flowchart of an exemplary method to determine the acoustic seal integrity of an earpiece in accordance with an exemplary embodiment is illustrated. In at least one embodiment of an acoustic sealing analysis system, the test signal is masked or used in a manner undetectable by the user. This allows unobtrusive (periodic or non-periodic) testing to determine if a device is sealed correctly ensuring optimum system performance and more importantly user safety.

In at least one exemplary embodiment, an audio content is provided in a step **402**. A step **404** stores the test signal in a test signal data buffer. For example, a single frequency sine wave is stored in the test signal data buffer. The output (or alternatively-input) of the test signal data buffer is optionally delayed by digital delay unit **406**. The function of delay unit **406** is to time-align the emitted test signal with the ECM signal so the cross-correlation is sensitive to changes in ear seal.

A step **408** stores the test ECM signal in a test signal data buffer. The output (or alternatively-input) of the ECM signal buffer can be filtered with a low-pass filter **410**. The low pass filter can be configured so that the pass-band covers the frequency of the test signal. In one exemplary configuration, the low-pass filter can be a cascaded bi-quad IIR type filter with the cut-off frequency equal to 10 Hz greater than the test signal frequency.

A step **412** cross-correlates the optionally delayed test signal buffer with the low-pass filtered ECM signal buffer. An exemplary method for the cross-correlation algorithm is described in FIG. **5**. The instantaneous cross-correlation (i.e. the cross-correlation at zero-lag) value from step **412** is compared with the cross-correlation threshold value **414** using comparator unit **416**. If the instantaneous cross-correlation of the two signal buffers is less than the threshold value **414**, then the seal test status is set to FAIL **418** (i.e. an ear-seal leak is detected); otherwise, if the cross-correlation is suitably high, the seal test status is set to PASS **420**.

Referring to FIG. **5**, a flowchart of an exemplary embodiment to determine the instantaneous cross-correlation between a first audio signal and a second audio signal is illustrated. The process begins at step **500**. In at least one exemplary embodiment, the first audio signal is the test signal (i.e. a sine wave) and the second signal is the low-pass-filtered ECM signal.

The correlation between two signals x and y at time k using an exponential window is defined as:

$$p(k) = \frac{S_{xy}(k)}{\sqrt{S_{xx}(k)_{yy}(k)}} \tag{1}$$

-continued

Where

$$S_{xx}(k) = \sum_{l=0}^{\infty} ce^{-\eta l} x_{k-l} y_{k-l}$$

$$c = 1 - e^{-\eta}$$

And S_{xx} and S_{yy} are defined similarly as in (2) (replacing y with x for S_{xx} etc.).

It can be shown (see Aarts et al, 2001) that (1) can be approximated with the recursion:

$$\hat{\rho}(k) = \hat{\rho}(k-1) + \gamma[\partial_k - \beta_k \hat{\rho}(k-1)] \tag{3}$$

$$\partial_k = 2x_k y_k$$

$$\beta_k = \alpha x_k^2 \alpha^{-1} y_k^2$$

Where

$$\alpha = \frac{y_{RMS}}{x_{RMS}}$$

$$\gamma = \frac{ce^{\eta}}{2x_{RMS} y_{RMS}} \tag{4}$$

The cross-correlation estimate using the above recursion is modified for block-wise processing rather than the sample-by-sample basis. This modification replaces the sample values (i.e. x(k) and y(k)) with values for the N-length block mean, i.e.

$$x(k) = \frac{1}{N} \sum_{l=0}^{N-1} x(k-l)$$

Furthermore, the numerator for y is replaced with a small constant and so is a (replacing a with a constant effectively un-normalizes the correlation estimate). Itis found that the modified un-normalized block-wise cross-correlation accurately estimates the cross-correlation compared with using the standard cross-correlation for two signals.

The modified block-wise fast cross-correlation algorithm, as summarized in FIG. **5**, comprises the following steps:

1. A first signal buffer **502** is accumulated. This signal buffer corresponds to the emitted test signal (i.e. the sine wave).
2. The RMS level of the first buffer is calculated **504** (x_{RMS})
3. The mean level of the first buffer is calculated **506**.
4. A second signal buffer **508** is accumulated. This signal buffer corresponds to the filtered ECM signal.
5. The RMS level of the second buffer is calculated **510** (y_{RMS}).
6. The mean level of the second buffer is calculated **512**.
7. In step **514**, γ (gamma) is approximated as:

$$\gamma = \frac{\Gamma}{2x_{RMS} y_{RMS}}$$

Where Γ is a small constant, e.g. **10E-3**.

8. In step **516**, ∂_k (delta) calculated as twice the product of the first signal buffer mean and the second signal buffer mean.
9. In step **518**, beta is calculated as the sum of the square of the mean value of the first buffer with the sum of the square of the mean value of the second buffer.

10. In step **520**, the new temporary estimate of the correlation newRho_temp is calculated as: newRho_temp=(delta-beta*rho_old))

11. In step **522**, the new estimate of the correlation newRho is updated by summing the previous estimate of the correlation with the product of gamma and the temporary estimate of the correlation newRho_temp.

12. In step **524**, the "old" value of the correlation is set to the newest correlation estimate, ready for the next iteration of the update algorithm.

13. In step **526**, the current correlation estimate between the emitted test signal and the received and filtered ECM signal is set as equal to the value of newRho.

Referring to FIG. **6**, a flowchart of a method to determine when to emit the test signal is shown. The test signal is emitted when the test can be performed unobtrusively to the user and also provides an accurate test. In at least one exemplary embodiment, a test event to determine if an earpiece is sealed correctly is initiated via a timing methodology. In a first timing scenario, the test event occurs after a delay of a first predetermined time period when the RMS of the Audio Content (AC) is less than a RMS threshold. In a second timing scenario, the delay of the first predetermined time period is allowed to lapse without the test event occurring when the RMS of the audio content is greater than the RMS threshold. A second predetermined time period is started where the test event occurs when the RMS of the audio content is less than the RMS threshold. The test event is then initiated when the second predetermined time period is exceeded independent of the RMS of the audio content.

A test sequence is initiated in a step **602**. The previous seal test event resets the first digital timer in a step **604**. A time delay is generated by the loop comprising steps **606** and **608**. The first digital timer is time incremented in the step **606**. After each added time increment, the first digital timer is compared against a digital_timer_threshold1. The first digital timer is time incremented (after the time has advanced another increment) after the comparison in the step **608** if the first digital timer is less than the digital_timer_threshold1.

A second digital timer is reset in a step **610** when the first digital timer is greater than the digital_timer_threshold1. The second digital timer is time incremented in a step **612**. Audio content (AC) from a signal buffer is retrieved in a step **614**. The audio content can be filtered through a low pass filter in an optional step **616**. The RMS of the audio content is calculated in a step **618**. The calculated RMS of the audio content is compared against an RMS_threshold **622** in a step **620**. The second digital timer is compared against a digital timer_threshold2 in a step **624** if the RMS of the audio content is greater than the RMS_threshold. The second digital timer is time incremented (after the time has advanced another increment) when the second digital timer is less than digital_timer_threshold2 in the step of **624**.

The audio content signal is mixed with the test signal when the RMS of the audio content is less than the RMS_threshold in a step **626**. Also, the audio content signal is mixed with the test signal when the second digital timer is greater than digital_timer_threshold2 in the step **624**. The modified audio signal (having the test signal mixed in) is emitted by the ECR in a step **628** for testing the sealing section of the earpiece. The first digital timer is then reset in the step **604** to begin a timing sequence for another sealing section test.

FIG. **7** is a graph illustrating different seal measurements in accordance with the present invention. The estimated un-normalized cross-correlation between the ECM signal and the test signal (i.e. sine wave) is shown for different sine wave frequencies from 30-80 Hz. Three different curves are provided corresponding to a good fit (i.e. a tight optimal seal providing approximately 20-30 dB of acoustic attenuation), mid or partial seal (i.e. an ear-seal that could be characterized as "half in" providing approximately 10-15 dB of acoustic attenuation), and a poor seal (i.e. an ear-seal providing less than 10 dB of acoustic attenuation). At lower test frequencies, the change in correlation is more pronounced as the degree of ear seal fitting is changed from "good" to "mid" and "poor". From the data, the threshold used to determine whether the ear seal can be characterized as "good" is approximately −20 dB, (i.e. 0.85 of FIG. **10** which corresponds to the value for XCorr_threshold **414** in FIG. **4**).

In at least one exemplary embodiment, the test signal for testing a seal of a sealing section is less than 200 hertz. The frequency of the emitted test signal is chosen to satisfy the requirements of being able to reveal small degradations in ear seal quality. It is also beneficial if the selected test signal frequency can be acoustically masked by reproduced audio to minimize detection of the test by an earpiece user. Both of these criteria are met using a test signal frequency below 200 Hz. The sensitivity is highest from the measured data at frequencies below 50 Hz. Conversely, as the test signal frequency increases the cross-correlation difference between a "good" and "bad" acoustic seal decreases. For example, with a 40 Hz test tone, the cross-correlation for a "good" ear seal is −8 dB, and for a bad ear seal it is −68 dB (i.e. a 60 dB difference). At a test signal frequency of 80 Hz, the cross-correlation for a "good" ear seal is −8 dB and for a bad ear seal it is −38 dB (i.e. a 30 dB difference). Thus, above 200 Hz the cross-correlation difference between a "good" and "bad" acoustic seal is further reduced thereby reducing the sensitivity of the test.

Using the cross-correlation rather than a level differencing approach improves the accuracy and minimizes errors which occur due to user non-speech body noise, such as teeth chatter; sneezes, coughs, etcetera. Furthermore, such non-speech user generated noise would generate a larger sound level in the ear canal than on the outside of the same ear canal producing inaccurate results.

FIG. **8** is a flowchart to adjust the degree of acoustic sealing of an Inflation Management System (IMS) in accordance with an exemplary embodiment. The IMS is adjusted depending on the degree of acoustic sealing provided by an earpiece. The method begins at step **802**. The acoustic sealing is measured as disclosed in FIG. **7** and the result provided in a step **804** to determine the cross-correlation (XCorr) between a test signal and corresponding ECM signal. In general, the higher the cross-correlation, the higher the degree of acoustic sealing. An exemplary graph showing the relationship between XCorr and acoustic sealing is given in FIG. **10**. The degree of acoustic sealing is determined from known XCorr using a look-up (or "hash") table or using a formula (e.g. of a polynomial form) that maps the acoustic sealing to the known XCorr value. The ambient sound level is measured in a step **806**. The ambient sound level corresponds to the noise level in proximity to the user. In general, a higher degree of attenuation is desired when the ambient sound levels are high. Conversely, at low ambient sound levels the attenuation level of the IMS may be less of an issue and comfort more of a factor. The IMS is adjusted in a step **808** to meet the attenuation needs. In general, inflating the IMS increases attenuation while deflating the IMS decreases attenuation. The method terminates at step **810**.

Referring to FIG. **9**, a more detailed flowchart to adjust the degree of acoustic sealing of an Inflation Management

System (IMS) is shown. In general, the attenuation increases when the pressure in the IMS is raised thereby allowing a degree of control to make adjustments. For example, an adjustment is made to increase attenuation when the background noise level rises or a seal check produces a failed result. Adjustments are made until the seal check passes. The pressure level adjustments of the IMS will fall within a comfort range of a user (e.g., between 0.1 bar and 0.3 bar gauge pressure). Typically, the pressure level is set at a minimum level to achieve a predetermined attenuation level.

The method begins at step **902**. The degree of acoustic sealing is determined from cross-correlation between the ECM signal and the generated test signal. The XCorr value is provided in a step **904**. In step **906**, the attenuation provided by the IMS is calculated (equation) or looked up (table) from data such as that shown in FIG. **10**. In one exemplary embodiment, the desired attenuation value is dependant on the ambient sound level of the user. In another exemplary embodiment, the desired attenuation value is dependant on the ear-canal sound level of the user. In yet another exemplary embodiment, the desired attenuation value is dependant on the level of audio content (e.g. speech or music audio) reproduced with the earphone device. In all of the above examples, the desired attenuation value is determined by one or more of the embodiments in a step **907**.

The difference between the degree of acoustic sealing determined in step **906** and the desired attenuation value determined in step **907** is calculated in step **908**. The difference value in step **908** is used to determine the change in pressure of the IMS necessary to minimize the difference value in a step **910**. In at least one exemplary embodiment, the difference value of the attenuation is converted into a corresponding pressure value change (e.g. in milli-Bars) using a similar look-up table or equation method as described previously. The pressure change in the IMS is then affected with step **912** to meet the desired attenuation level. For example if the desired attenuation is a decrease of 10 dB in sound across the earpiece in the ear canal, then a pressure of a variable volume inflatable system can have a gauge pressure of about 0.15 bar. If the desired attenuation is a decrease of 20 dB across the earpiece in the ear canal then the gauge pressure can be increased to about 0.25 bar, where an increased pressure is associated with an increase in attenuation. An experimental table for each earpiece can be generated in a standard devised experimental setup (e.g. impedance tunnel) and referred to when changes are needed. The method ends at step **914**.

Referring to FIG. **11**, a flowchart of an exemplary method to determine a test signal fundamental is illustrated. In at least one embodiment of an acoustic sealing analysis system, the test signal is masked or used in a manner undetectable by the user or made pleasant such that the user is unaware that the test signal is being played. This allows unobtrusive (periodic or non-periodic) testing to determine if a device is sealed correctly ensuring optimum system performance and more importantly user safety.

In at least one exemplary embodiment, an audio content **1102** is provided. A step **1104** stores audio content **1102** in a data buffer. In this example, audio content **1102** is music played from a media player and received via a wired or wireless connection to at least one earpiece in the user's ear. An alternate example would be that audio content **1102** is a speech audio signal from a portable telephone device or the like.

A step **1106** determines if the buffer of audio content **1102** comprises a strong tonal signal component. Mixing the test signal having a similar fundamental frequency as audio content **1102** will mask the test signal when played to the user. Thus, the test signal is musically in harmony with the reproduced music and results in very little perceptual degradation in sound quality.

A step **1108** determines whether to update or generate the first fundamental tone for the test signal. The test signal is not updated or generated if buffered audio content **402** does not contain a strong tonal signal component. A return to step **1104** fills the buffer with the next audio content **402** for analysis.

A step **1110** analyzes the buffer of data of audio content **1102** when it has been determined that it contains a strong tonal signal component. Step **1110** determines the fundamental frequency of the tonal signal. The fundamental tone, often referred to as the fundamental and abbreviate f_0 is the lowest frequency in a harmonic series. The fundamental frequency (also called a natural frequency) of a periodic signal is the inverse of the pitch period length. The pitch period is the smallest repeating unit of a signal. The fundamental frequency of the tonal signal can be calculated using an autocorrelation analysis.

In one exemplary embodiment, a mathematical operation **1114** is performed where the frequency component of the test signal is limited to a frequency range below a lower minimum and upper maximum frequency range. Fund_ratio is calculated, which is defined as a ratio of the determined fundamental frequency (F_fund) of the tonal signal from step **1110** to an upper threshold value F_fund threshold **1112**, which in one exemplary embodiment, is a fixed constant equal to approximately 100 Hz. In general, F_fund threshold **1112** is chosen to be a low frequency value which is above the lowest (or −3 dB) frequency that a transducer can reproduce, but below a predetermined frequency. In a comparison step **1116**, if the estimated F-fund is higher than the F_fund threshold **1112** (ratio >1), then F_fund is reduced by an integer multiple to be below F_fund threshold **1112** corresponding to the mathematical operation of step **1118**. Otherwise, the test signal fundamental is equal to F_fund as shown in step **1120**. Although not shown, the calculated test signal fundamental is compared and determined to be greater than a predetermined threshold.

Referring to FIG. **1**, in at least one exemplary embodiment, processor **116** is configured to receive or generate audio content. As mentioned previously, the audio content can from external devices such as a portable phone or a media player. Memory **104** can be used as a buffer for the audio content. Processor **116** is configured to receive the buffer of audio content from memory **104**. The steps and calculations of the block diagram of FIG. **4** are then performed by processor **116**. The result being one of the identification of a strong tonal signal component in the buffer of audio content and the test signal fundamental or loading the buffer with new audio content and starting the process again.

Referring to FIG. **12**, a flowchart of an exemplary embodiment to determine tonal presence in audio content is shown. In particular, the exemplary embodiment relates to step **1106** of FIG. **11** that analyzes audio content stored in a buffer. The method begins at step **1202**. A step **1204** gets the audio content stored in an audio signal buffer hereinafter called the audio signal. A filter step **1206** filters the audio signal to a frequency range of interest that relates to a sealing test frequency. For example, a band pass filter in the range of 20 Hz to 500 Hz could be used to filter the audio signal where the test signal is in the lower audio frequency range. An auto-correlation step **1208** analyzes the audio signal

where a strong tonal signal component is represented by peaks in the analysis results. A step **1210** generates Absolute (Acorr) which is a number representing the absolute magnitude of the peaks from the analysis. For example, Absolute (Acorr) can be the square of the results from the auto-correlation.

A crest_factor_Acorr **1218** is generated from the results by calculating an RMS value **1214** (or time-averaged peak value) and peak value **1216** (or time averaged peak value). In at least one exemplary embodiment, the crest_factor_Acorr **1218** is the ratio of the peak value to the RMS value of an absolute auto-correlation sequence of the audio signal.

A comparison step **1222** is then performed. A strong tonal presence is identified when crest_factor_Acorr **1218** is greater than a threshold Crest_factor_Acorr_threshold **1220**. Identification of the strong tonal presence indicates the audio signal would facilitate masking of the test signal to determine sealing of the device (step **1226**). The audio signal is not used in conjunction with the test signal if crest_factor_Acorr **1218** is less than Crest_factor_Acorr_threshold **1220** (step **1224**). The process would begin again loading a next sequence of the audio signal into the buffer for review.

Referring to FIG. **1**, as mentioned previously, audio content is stored in a buffer, for example memory **104**. The audio content in the buffer is provided to processor **116**. In at least one exemplary embodiment, processor **116**, runs the analysis as described in the block diagram of FIG. **12** thereby determining if a strong tonal presence is found in the audio content in the buffer. New audio content is loaded into the buffer (memory **104**) if a strong tonal presence is not found beginning the procedure again.

Referring to FIG. **13**, a flowchart of a method to determine when to emit the test signal is shown. The method begins at step **1302**. The test signal is emitted when the test can be performed unobtrusively to the user and also provide an accurate test. In a step **1304**, an audio signal is retrieved from a buffer. In at least one exemplary embodiment, the audio signal is received from an ECM or an ASM. The audio signal is measured to determine when the sound level is low in the ear canal, the ambient environment, or both. In general, the test signal is emitted when the sound level is low.

A filter step **1306** band pass filters the audio signal. In one exemplary embodiment, filter step **1306** filters the audio signal from 50 Hz to 150 Hz which corresponds to a frequency range of the test signal. In a step **1308**, the RMS of the audio signal is calculated. The audio signal is analyzed to detect when the energy within an audio frequency range is below a threshold RMS_threshold **1310**. The RMS of the audio signal is the signal level in the volume being measured. A comparison step **1312** compares the measured RMS level of the filtered audio signal against RMS_threshold **1310**. In a step **1314**, a test signal is emitted when the measured RMS value is less than RMS_threshold **1310**. No test signal is emitted when the RMS of the audio signal is greater than RMS_threshold **1310**. The method ends at step **1316**.

Referring to FIG. **14**, a flowchart of an exemplary method to determine acoustic seal integrity is illustrated. For example, an earpiece seal integrity corresponds to a full or partial acoustic barrier between a first volume (ear canal) and a second volume (ambient environment). In one exemplary embodiment, the degree of acoustic seal integrity is expressed as either a PASS or FAIL status, where FAIL indicates that the acoustic seal is compromised relative to a normal operating acoustic seal. For example, an earpiece that has performed the seal test and determined that the sealing unit is not sealed correctly in the ear canal of the user can provide a signal or message indicating the problem. The user can then remove, reinsert, and retest the earpiece to ensure that the seal is within normal operating specifications.

The method begins at step **1402**. An acoustic test signal is provided in a first volume. In a step **1404** a transducer measures the acoustic test signal and stores it in a signal buffer. In a step **1406**, a second transducer in a second volume isolated from the first volume by an acoustic barrier measures a second acoustic signal in the second volume. A portion of the acoustic test signal passes the acoustic barrier into the second volume. The amount of the acoustic test signal passing the acoustic barrier is a measure of the seal provided by the acoustic barrier.

In a filter step **1408**, the measured acoustic test signal in the first volume is filtered in a frequency range corresponding to the acoustic test signal to remove signals that are not part of the test. The measured signal from the first volume is heretofore called the first volume signal. Similarly, in a step **1410**, the measured signal in the second volume is filtered in a frequency range corresponding to the acoustic test signal to remove signals not related to the test (outside the frequency range) in the second volume. The measured signal from the second volume is heretofore called the second volume signal.

A correlation, cross-correlation, or coherence analysis is performed on the first volume signal and the second volume signal. The correlation, cross-correlation, or coherence analysis is a measure of the similarity of the signals in the first and second volumes. In particular, the non-difference analysis measures the acoustic test signal leaking past the acoustic barrier by identifying the portion of the second volume signal that is similar to the acoustic test signal in the first volume.

In at least one exemplary embodiment, a correlation step **1412** is performed comprising a cross-correlation of the first volume signal and the second volume signal. In a step **1414**, the peak of the cross-correlation is identified. The peak of the cross-correlation is Absolute(XCorr). In a mathematical step **1418**, the Lag-time of Peak **1420** and the Magnitude of Peak **1422** is calculated. The Lag-time of Peak **1420** is a measure of the time delay between receiving the signals in the first and second volumes. In particular, the first volume signal should be received before the second volume signal. The Magnitude of Peak **1422** corresponds to the similarity between the signals in the first and second volumes. Thus, a larger number for Magnitude of Peak relates to more leakage of the acoustic test signal getting past the acoustic barrier.

Two comparisons are performed that determine if the acoustic barrier is sealed correctly based on the measured and calculated data from the first and second volumes. In a comparison step **1426**, the measured Lag-time of Peak is compared against Target Lag Limits **1424**. The measured lag-time should fall within the predetermined range (Target Lag Limits **1424**) for the seal test to be valid. If the Lag-time of Peak is within the appropriate range then a logic 1 is provided to AND function **1432**, otherwise a logic 0 is provided. In a second comparison step **1428**, the Magnitude of Peak is compared against a Peak_threshold **1430**. If the Magnitude of Peak is greater than the Peak_threshold **1430** a logic 1 is provided to AND function **1432**. This indicates that a significant portion of the acoustic test signal is present in the second volume measurement, otherwise a logic 0 is provided. A FAIL output **1434** corresponds to a logic 1 at the output of AND function **1432**. The FAIL occurs when the Lag-time of Peak is within the predetermined range and the

Magnitude of Peak is greater than the Peak_threshold indicating that the acoustic barrier is sealed improperly. All other conditions indicate a PASS output **1434** and the acoustic barrier is sealed correctly.

In at least one exemplary embodiment and referring briefly to FIG. **1**, an earpiece is tested to determine if sealing unit **108** is sealed correctly to the ear canal of the user. Sealing unit **108** creates a first volume in ear canal **124** and a second volume outside the ear canal **124** in the ambient environment. A masking approach is used to perform seal testing unobtrusively to the user. The user is listening to music or speech (audio content) provided to ear canal **124** from ECR **114**.

The music or speech is buffered in memory **104** or memory in processor **116**. Processor **116** analyzes the audio content in the buffer to identify a strong tonal content. A test signal can be created once audio content with strong tonal content is found. The test signal will have at least one fundamental pitch corresponding to the strong tonal content and optionally further harmonics. Processor **116** also analyzes the measured signals from ECM **106** and ASM **120** to determine when to emit the test signal. Processor **116** monitors and compares the sound level in the ambient environment and ear canal **124**. Processor **116** will provide the generated test signal to ECR **114** during an optimum time for test accuracy such as when the ambient sound level is low, the ear canal sound level is low, or both. Also, processor **116** will not output the test signal if there is audio content similar to the test signal in the ear canal or ambient environment.

Processor **116** monitors the test conditions and then provides the test signal to ECR **114** when an accurate sealing test can be performed. ECR **114** outputs an acoustic test signal which may or may not have other audio content. ECM **106** and ASM **120** respectively measure acoustic signals in ear canal **124** and the ambient environment. Processor **116** is operatively coupled to ECM **106** and ASM **120**. The measured signals are buffered in memory **104**.

In an exemplary embodiment, a cross-correlation is used to measure the similarity between the signals in ear canal **124** and the ambient environment. Processor **116** performs the cross-correlation calculations using the measured acoustic signals from ECM **106** and ASM **120**. In particular, the cross-correlation is used to identify and compare the acoustic test signal present in the two volumes separated by the acoustic barrier. A cross-correlation between ASM and ECM signals is defined according to the following equation (5):

$$X\ \mathrm{Corr}(n,l)=\Sigma_{n=0}^{N}\mathrm{ASM}(n)\mathrm{ECM}(n-l), \tag{5}$$

Where: 1=0, 1, 2, . . . N

Where ASM(n) is the nth sample of the ASM signal, and ECM(n−1) is the $(n-1)^{th}$ sample of the ECM signal. A peak of the absolute cross-correlation is estimated using a peak-picking function and also the lag time at which this peak occurs (i.e. the index I at which this occurs). Thus, the Lag-time of Peak and the Magnitude of Peak are known and respectively compared against a Target Lag Limit range and a Peak Threshold. The user of the earpiece is notified or warned that sealing unit **108** is improperly sealed by processor **116** if the measured Lag-time of Peak is within the Target Lag Limit range and the Magnitude of Peak is greater than the Peak Threshold.

Like Correlation and Cross-Correlation, a coherence function is also a measure of similarity between two signals. Coherence is another non-difference comparison approach that can be used for detecting acoustic seal integrity. Coherence is defined as:

$$\gamma_{xy}^2 = \frac{|G_{xy}(f)|^2}{G_{xx}(f)G_{yy}(f)} \tag{6}$$

Where Gxy is the cross-spectrum of two signals (e.g. the ASM and ECM signals), and can be calculated by first computing the cross-correlation in equation (5), applying a window function, for example a Hanning window, and transforming to the frequency domain, for example via an FFT. Gxx or Gyy is the auto-power spectrum of either the ASM or ECM signals, and can be calculated by first computing the auto-correlation (using equation 5, but where the two input signals are both from either the ASM or ECM and transforming to the frequency domain. The coherence function gives a frequency-dependent vector between 0 and 1, where a high coherence at a particular frequency indicates a high degree of coherence at this frequency, and can therefore be used to analyze test signal frequencies in the ASM and ECM signals whereby a high coherence indicates the presence of the test signal in the ambient environment (indicating leakage past the acoustic barrier).

Other approaches such as frequency spectrum analysis and RMS levels can also be used to determine if the earpiece is sealed correctly. Using a non-difference comparison approach such as coherence or cross-correlation between the ASM and ECM signals to determine sealing is more reliable than taking the level difference of the ASM and ECM signals. Using the cross correlation rather than a level differencing approach improves the accuracy and minimizes errors which may occur due to user non-speech body noise, such as teeth chatter, sneezes, coughs, etcetera. Furthermore, such non-speech user generated noise would generate a larger sound level in the ear canal than on the outside of the same ear canal producing inaccurate results.

FIGS. **15**A and **15**B illustrate a method of varying the seal of an inflation system in accordance with at least one exemplary embodiment. In the non-limiting example, when a seal is essentially detected as being low, for example the calculated sound isolation of the system is 3 dB or less, a signal is sent to a seal varying device (e.g., **1500**) to vary the seal, in this case increase (i.e. increase the sound isolation of the system) the seal value. The signal can be instructions to send a current over a period of time to an actuator, which can decrease the overall volume of the system (hence increasing the pressure and effectively the sealing). For example a slider actuator such as the P-653 PILine® can be used. Which has the dimensions of 15 mm by 11 mm by 8 mm, which includes an attached electronics control board, and has a mass of 1 gram. General operation uses 5V and about 100 mamps with a typical speed of 50 to 90 mm/sec. Note that the max force of about 0.15 N but such systems can be tailored to enable pumping beyond atmospheric pressure (e.g., can increase the max force). The non limiting example illustrated in FIGS. **15**A and **15**B shows a slider actuator **1500**, with a moving slide **1510**, having attached a pumping arm **1560**, with a hole **1550** covering bump **1520**. Upon receipt of a signal **1505** the actuator can move **1570** such that the bump **1520** covers the hole **1550** in a bellows **1530** pump. The actuation compresses the miniature bellows **1530** pushing **1590** gas through the one-way valve **1540**, upon the back stroke the bump **1520** uncovers the hole **1550** and air rushes back into the bellows **1530** for the next pump. For example if the stroke length is 2 mm and the pump arm **1560** contact area is about 9 mm 2 then each stroke moves 18 mm 3 of volume. If an inflation system **1570** needs to be inflated more (e.g., more gas to increase sealing) then each stroke

can provide an additional volume of gas of 18 mm 3 into the system increasing the inflation system **1580**. If the inflation system is initially empty (e.g., needs 1000 mm 3 of gas volume to inflate) then about 56 strokes would be needed for inflation, which is about 110 mm one direction stroke length or about 2 seconds at P-653 PILine speeds. The number of oscillations and stroke length can be determined according to the signal **1505** sent, which can be specifically tailored depending upon the electronics controlling the actuators. Note that PI-653 is an example only. Other actuation systems can be used and controlled by signal **1505**.

FIG. **16** illustrates a block diagram of controlled sealing in response to a seal fail signal and/or a request for increased seal attenuation. For example, a command signal **1600** is received (e.g., a seal fail signal in which a default attenuation value is attached for example 15 dB, or a signal requesting an additional amount of attenuation) by a processor. The command signal specifies an additional amount of attenuation or that the seal has failed. An attenuation needed N is identified **1610**. For example if the current attenuation is 5 dB loss at f=500 Hz, at a pressure of 0.1 bar, and a command signal is received requesting a 10 dB loss at 500 Hz, then an experimental table is queried to find the pressure needed P which is then subtracted from the current pressure to obtain an increase in pressure DP needed. The increase in pressure is converted into a volume of gas increase needed (e.g., again referring to experimental tables based upon the inflation system volume). The volume of gas increase needed can then be directly linked with the number of cycles of an actuator pump M, **1620**. The number of requested cycles M can then be sent **1630** to the actuator control circuit to pump the designated number of cycles. The system can then retest the attenuation **1640** and if refinements are needed the process can start again.

While the present invention has been described with reference to exemplary embodiments, it is to be understood that the invention is not limited to the disclosed exemplary embodiments. The scope of the following claims is to be accorded the broadest interpretation so as to encompass all modifications, equivalent structures and functions of the relevant exemplary embodiments. For example, if words such as "orthogonal", "perpendicular" are used the intended meaning is "substantially orthogonal" and "substantially perpendicular" respectively. Additionally although specific numbers may be quoted in the claims, it is intended that a number close to the one stated is also within the intended scope, i.e. any stated number (e.g., 90 degrees) should be interpreted to be "about" the value of the stated number (e.g., about 90 degrees).

Thus, the description of the invention is merely exemplary in nature and, thus, variations that do not depart from the gist of the invention are intended to be within the scope of the exemplary embodiments of the present invention. Such variations are not to be regarded as a departure from the spirit and scope of the present invention.

We claim:

1. An audio device configured to test a seal of an earphone comprising:

a memory that stores instructions; and

a processor, wherein the processor is configured to execute the instructions to perform operations, the operations comprising:

generating a test signal, wherein the test signal includes multiple frequency components, wherein at least one component lies between a range of 30 Hz and 200 Hz;

sending the test signal to a speaker of an earphone, wherein the earphone includes a first microphone, the speaker, and a sealing section, and wherein the sealing section is configured to form an acoustic barrier between a first side of the earphone and a second side of the earphone when the earphone is worn by a user,

receiving a first microphone signal from the first microphone;

calculating a value, using a first signal and a second signal, wherein the value is the result of a non phase calculation of at least one of a coherence, a correlation, a cross-correlation, a difference, or a combination;

comparing the value to a threshold to determine a seal quality between the first side and the second side;

generating a message to convey the seal quality; and

sending the message to the user.

2. The audio device according to claim **1**, wherein the message is an acoustic message.

3. The audio device according to claim **1**, wherein the message is a visual message sent to a display of the audio device.

4. The audio device according to claim **1**, wherein the speaker plays the test signal from the first side.

5. The audio device according to claim **4**, wherein the first microphone measures sound from the first side.

6. The audio device according to claim **4**, wherein the first microphone measures sound from the second side.

7. The audio device according to claim **1**, wherein the first signal is the test signal and the second signal is the first microphone signal.

8. The audio device of claim **1**, wherein the first signal is the test signal and the second signal is a modified first microphone signal.

9. The audio device according to claim **8**, wherein the modified first microphone signal is generated by applying a low pass filter to the first microphone signal, wherein the upper cutoff frequency is less than or equal to 200 Hz.

10. The audio device of claim **1**, wherein the first signal is a modified test signal and the second signal is the first microphone signal.

11. The audio device according to claim **1**, wherein the first signal is a modified test signal and the second signal is a modified first microphone signal.

12. The audio device according to claim **11**, wherein the first microphone signal is generated by applying a low pass filter to the first microphone signal, wherein the upper cutoff frequency is less than or equal to 200 Hz.

13. The audio device according to claim **1**, wherein the earphone includes a second microphone.

14. The audio device according to claim **13**, wherein the operations further comprise:

receiving a second microphone signal from the second microphone.

15. The audio device according to claim **14**, wherein the first signal is the first microphone signal and the second signal is the second microphone signal.

16. The audio device of claim **14**, wherein the first signal is a modified first microphone signal and the second signal is the second microphone signal.

17. The audio device of claim **14**, wherein the first signal is a modified first microphone signal and the second signal is a modified second microphone signal.

18. The audio device of claim **1**, wherein the seal quality is good if the value is at or above the threshold value.

19. The audio device of claim **1**, wherein the sealing section is composed of at least one of rubber, silicone, a flexible polymer, or a combination thereof.

20. The audio device of claim **1**, wherein the sealing section is an eartip.

* * * * *