US006120262A

United States Patent [19]

McDonough et al.

[11] Patent Number: 6,120,262

[45] Date of Patent: Sep. 19, 2000

[54] **ELECTRONIC DEVICE CONTROL SYSTEM**

[75] Inventors: **William B. McDonough**, Huntington Beach, Calif.; **David R. Lathrop**, Edwardsville, Ill.

[73] Assignee: **Emerson Electric Co.**, St. Louis, Mo.

[21] Appl. No.: **09/167,902**

[22] Filed: **Oct. 7, 1998**

[51] **Int. Cl.**[7] **H04Q 7/02**; F21V 33/00; H02S 4/00; G05R 19/02

[52] **U.S. Cl.** **417/424.1**; 318/16; 318/256; 340/825.69; 340/825.72; 362/96; 416/5

[58] **Field of Search** ..... 417/44.1, 410.1, 417/423.1, 424.1, 572; 416/5, 170 R; 340/825.57, 825.62, 825.69, 825.72; 362/96; 318/16, 256

[56] **References Cited**

U.S. PATENT DOCUMENTS

4,408,150	10/1983	Holston et al.	318/779
4,716,409	12/1987	Hart et al.	340/825.22
4,719,446	1/1988	Hart	340/310 A
4,818,920	4/1989	Jacob	340/825.57 X
5,041,825	8/1991	Hart et al.	340/825.06
5,164,644	11/1992	Hsieh	318/284
5,187,472	2/1993	Hart et al.	340/825.69
5,189,412	2/1993	Mehta et al.	340/825.69 X
5,365,154	11/1994	Schneider et al.	318/103
5,440,459	8/1995	Chan	362/96
5,541,584	7/1996	Mehta et al.	340/825.57
5,559,406	9/1996	Chang	416/5 X
5,627,527	5/1997	Mehta	340/825.06
5,689,261	11/1997	Mehta et al.	341/173
5,748,074	5/1998	Chomet	340/328
5,778,077	7/1998	Davidson	340/825.72 X
5,874,789	2/1999	Su	340/825.72 X
5,917,425	6/1999	Crimmins et al.	340/825.72 X

Primary Examiner—Tony M. Argenbright
Attorney, Agent, or Firm—Howrey Simon Arnold & White, LLP

[57] **ABSTRACT**

A control system for a device powered by an AC power source is presented. The control system includes a fixed controller adapted to be wall-mounted and powered by the AC power source. The fixed controller is also adapted to transmit control signals to the device. The control system further includes at least one movable controller adapted to be powered by a DC power source and transmit control signals to the device. In one embodiment, both movable controller and the fixed controller are adapted to transmit to the receiver via the same transmission medium, such as RF or infrared. The electronic device to be controlled may, for example, comprise a ceiling fan and associated light fixtures.

39 Claims, 5 Drawing Sheets

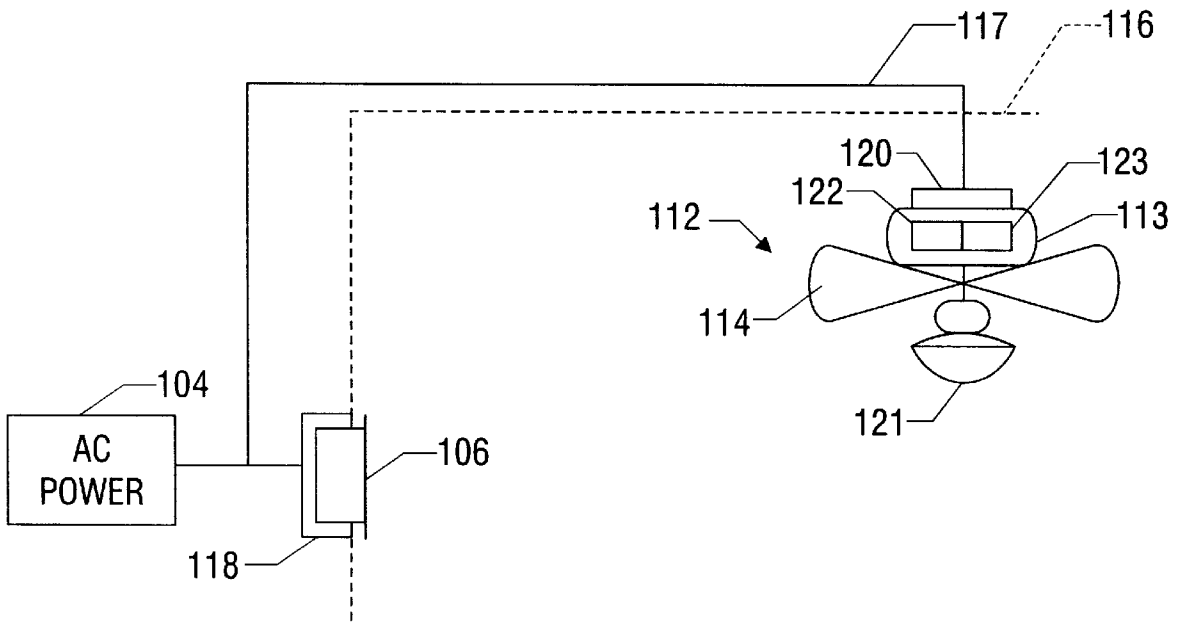

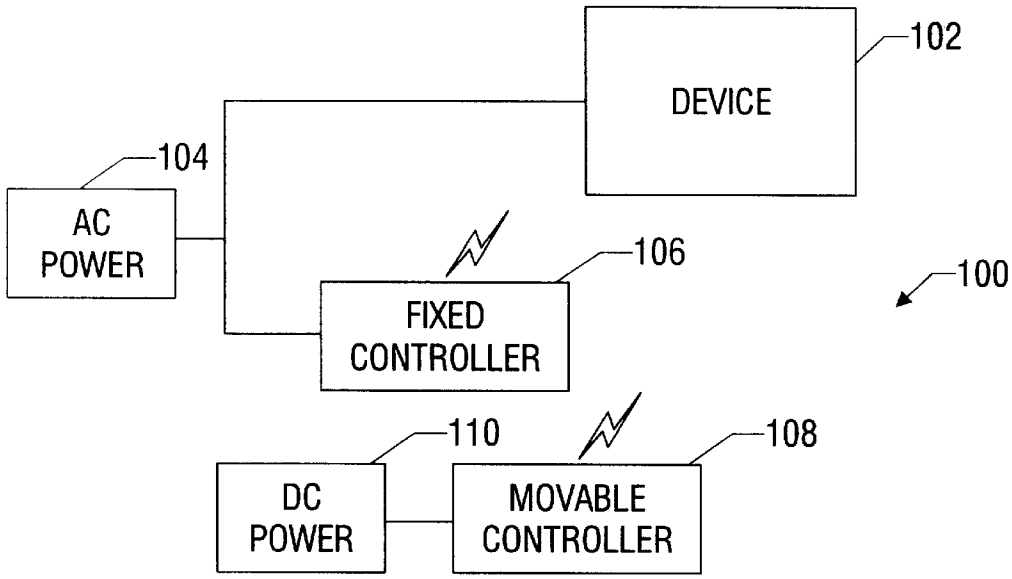
DEVICE
102
104
AC POWER
106
FIXED CONTROLLER
100
110
108
DC POWER
MOVABLE CONTROLLER

FIG. 1

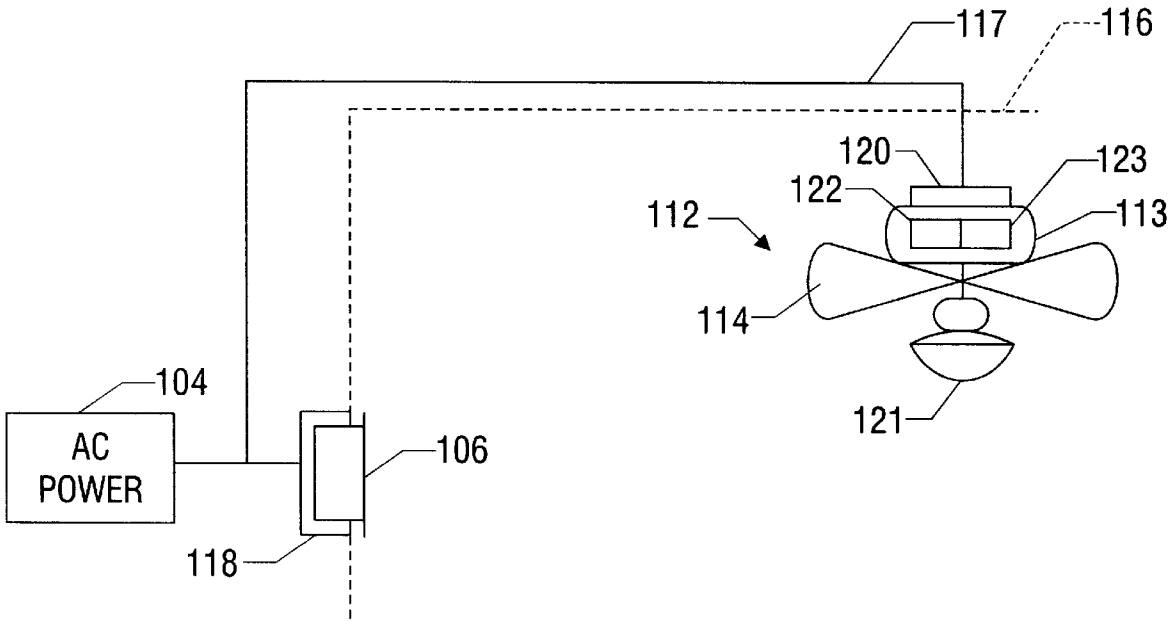
117
116
120
123
122
112
113
114
121
104
AC POWER
106
118

FIG. 2

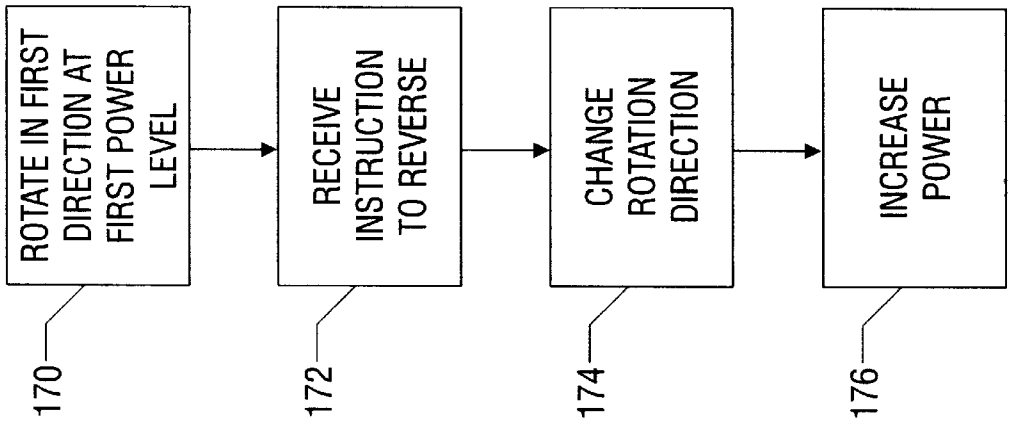

FIG. 5

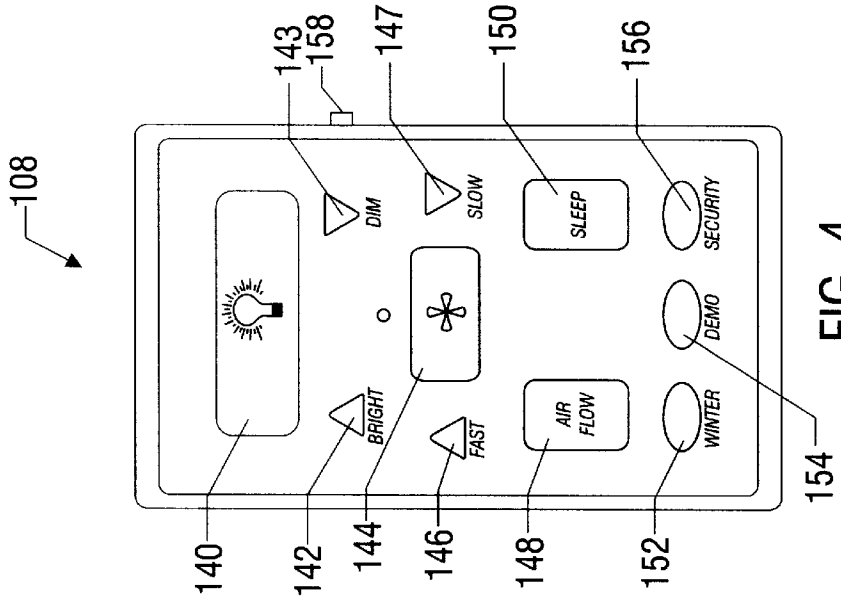

FIG. 4

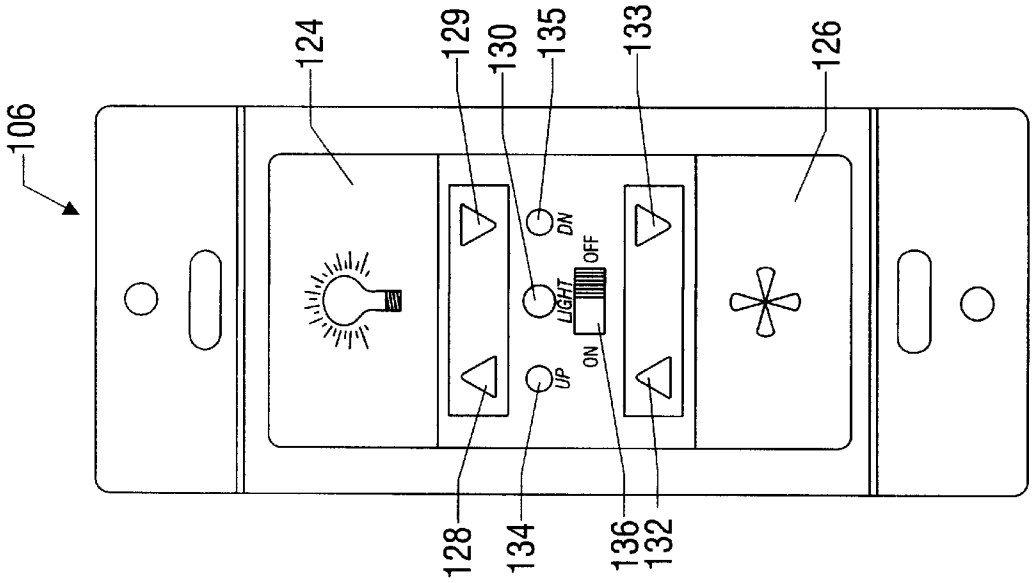

FIG. 3

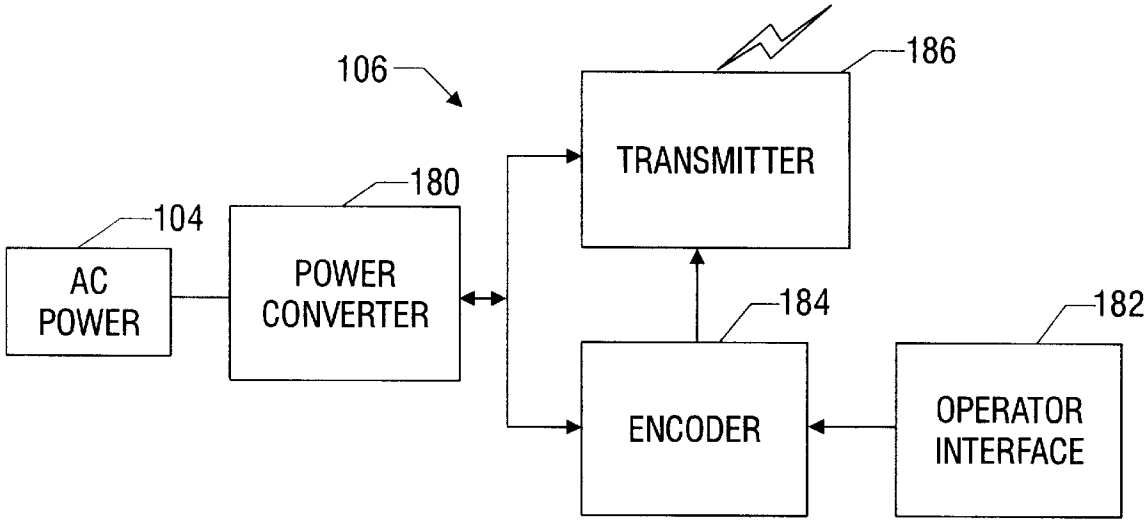
106
186
TRANSMITTER
180
104
AC POWER
POWER CONVERTER
184
182
ENCODER
OPERATOR INTERFACE

FIG. 6

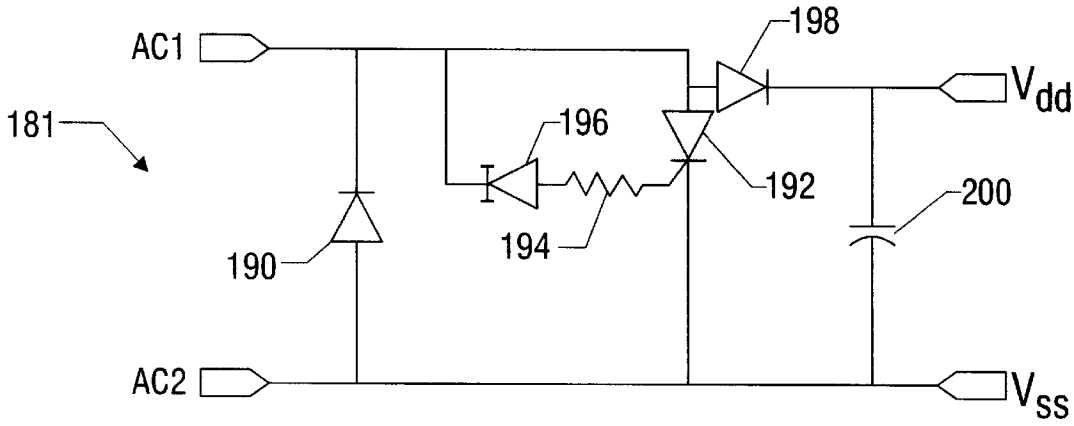
198
AC1
Vdd
181
196
192
200
190
194
AC2
Vss

FIG. 7

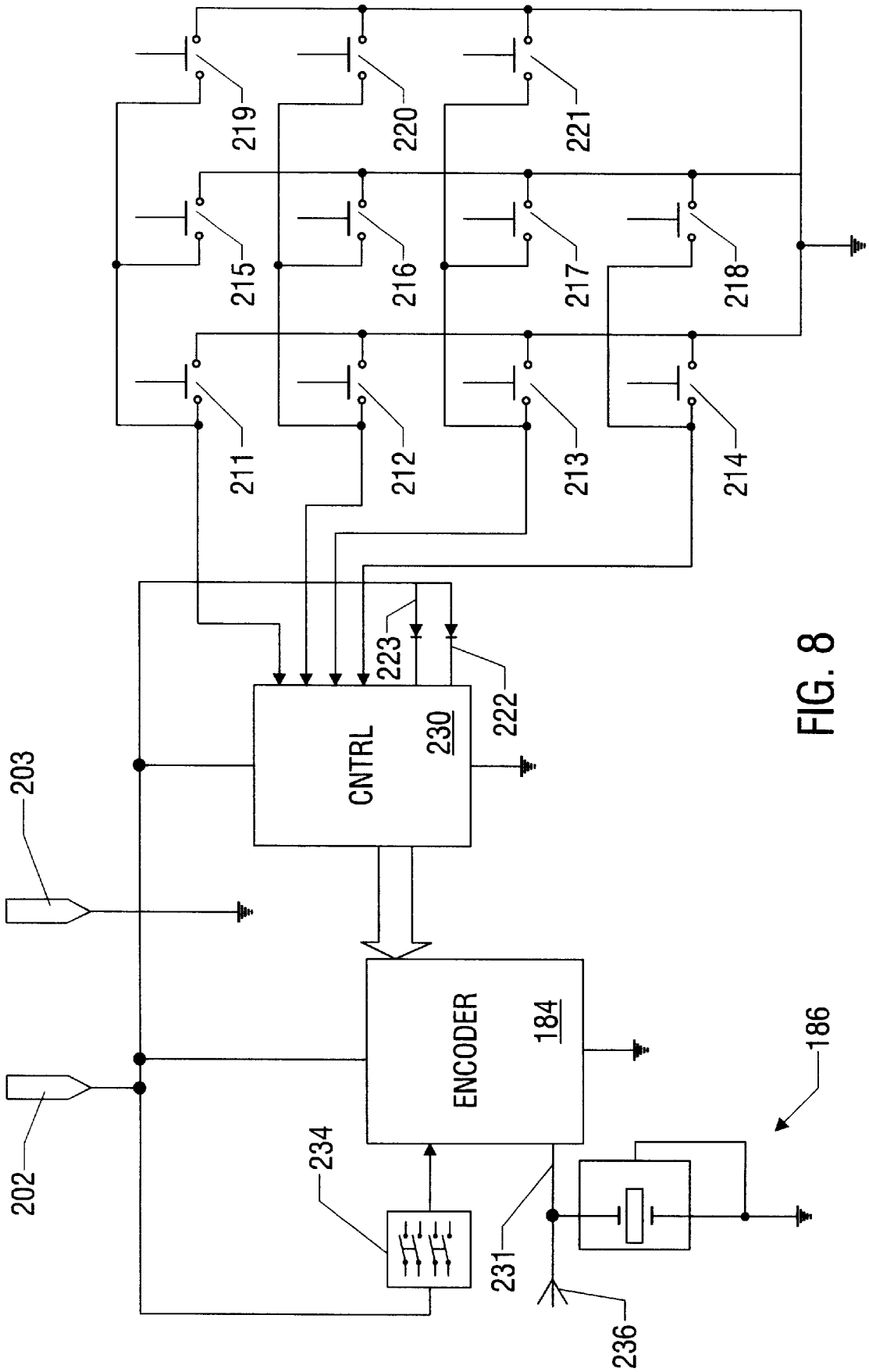
211
212
213
214
215
216
217
218
219
220
221
222
223
CNTRL
230
203
202
ENCODER
184
234
231
236
186

FIG. 8

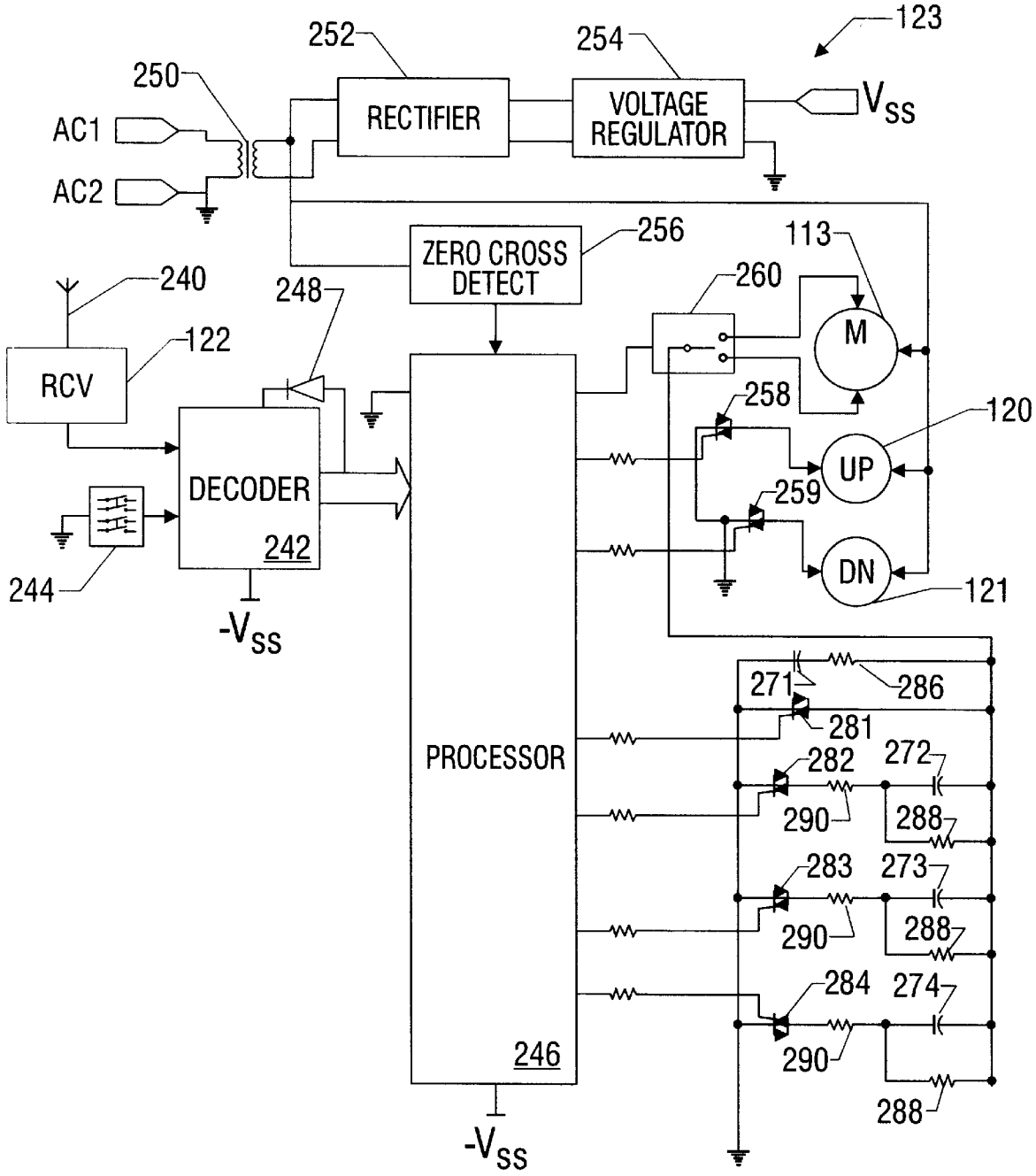
123
252
254
250
RECTIFIER
VOLTAGE REGULATOR
V_{SS}
AC1
AC2
ZERO CROSS DETECT
256
113
240
248
260
M
122
RCV
258
120
UP
DECODER
259
242
DN
244
121
$-V_{SS}$
271
286
281
PROCESSOR
282
272
290
288
283
273
290
288
284
274
290
246
288
$-V_{SS}$

FIG. 9

ELECTRONIC DEVICE CONTROL SYSTEM

BACKGROUND OF THE INVENTION

1. Field of the Invention

This invention relates generally to remote control systems, and more particularly, to a method and device for controlling electronic devices such as a ceiling fan and its associated light fixtures.

2. Description of Related Art

Many types of electronic devices employ remote control systems. A common application for a remote control system is an electric ceiling fan, wherein the remote control is used to vary the speed and direction of the fan operation as desired by a user. Further, ceiling fans often have one or more light fixtures incorporated therewith. Thus, it may be desirable to also control operation of the light fixtures via a remote control device.

In typical installations, ceiling fans are powered via standard household AC power via a wall switch box. Often, a ceiling fan and its associated light fixtures replaces an existing light fixture on a two-wire, switched circuit. Thus, the single wall switch controls both the ceiling fan and lights. A user often may want to turn off the light fixture, without turning off the fan. In known ceiling fans, this may be accomplished by connecting the household wiring to the fan such that the switch only controls the light fixture, and a switch operated by a pull chain controls operation of the ceiling fan. Unfortunately, in addition to being unsightly, access to pull chains is often difficult in certain ceiling fan installations, including installations on high ceilings or over furniture.

In other installations, the existing light circuit is modified, or a circuit is pre-wired for a ceiling fan and light fixture, such that both the fan and light may be controlled via wall switches sharing a common switch box. However, a typical wall switch only controls the on/off function of the ceiling fan and light fixture. Other functions, including fan direction and speed, and light intensity, must be controlled by another means, such as a pull string. This problem is expanded if the ceiling fan includes multiple light fixtures.

Prior art attempts to enhance control of ceiling fan and light control and replace pull-string switches have been largely unsatisfactory. One approach is to replace a standard wall switch with a microprocessor-based control unit. Control signals from the control unit are sent to the ceiling fan by modulating them onto the AC power line. However, such systems may reduce the AC power to the fan, causing fluctuations in the fan speed and light intensity.

Other approaches use a wireless remote control unit that may be hand held or held in a wall-mounted receptacle. Again, there are shortcomings associated with known wireless controllers. For instance, known wireless remote control units are typically battery powered. Thus, a user loses use of the remote controller, or the control functions become erratic when the battery discharges and eventually dies, which is often frustrating.

Moreover, it may be desirable to operate a single ceiling fan unit via both a wall-based switch and one or more hand held remotes. Upon entering a room, a user may wish to use the wall control to turn on the fan and lights, and adjust the light intensity and fan speed. At a later time, the user may wish to use the hand held remote to adjust the fan speed or light intensity, for example, if the temperature or light conditions have changed since entering the room. If a wall control unit sends signals via the AC power line, and the remote uses a wireless transmission, two different receivers would be required. Typical ceiling fans would not have sufficient space for housing multiple receiving units. Further, it would be difficult to coordinate control via two different systems, as this could result in conflicting commands being presented to the ceiling fan.

Similar problems exist with other remote controlled electronic devices. Thus, a need exists for an improved electronic device remote control system. The present invention addresses these and other shortcomings of the prior art.

SUMMARY OF THE INVENTION

In one aspect of the invention, a control system for a device powered by an AC power source is presented. The control system includes a fixed controller adapted to be wall-mounted and powered by the AC power source. The fixed controller is also adapted to transmit control signals to the device. The control system further includes at least one movable controller adapted to be powered by a DC power source and transmit control signals to the device. In one embodiment, both movable controller and the fixed controller are adapted to transmit to the receiver via the same transmission medium, such as RF or infrared. The electronic device to be controlled may, for example, comprise a ceiling fan and associated light fixtures.

In another aspect of the invention, a fixed controller for a ceiling fan powered by an AC power source includes a power converter adapted to receive AC power from the AC power source and supply DC power to the remote controller. A transmitter is adapted to send wireless control signals from the fixed controller to the ceiling fan. In a particular embodiment, the power converter comprises a half-wave rectifier.

In a further aspect of the invention, remote control unit for controlling a ceiling fan is presented. The ceiling fan has at least first and second light fixtures, and the remote control unit includes a switch for selecting one of the first or second light fixtures for control, and a device that indicates which one of the first or second light fixtures is being controlled.

In a still further aspect of the invention, a ceiling fan system includes a ceiling fan having a motor. The motor has a stator and a rotor adapted to rotate relative to the stator, and is adapted to be coupled to an AC power source. A plurality of blades are coupled to the rotor so as to rotate therewith. First and second light fixtures are coupled to the AC power source, and a control unit is coupled to the motor and the light fixtures. The control unit is adapted to receive control signals indicating operating parameters for the motor and light fixtures and control operation of the motor and the light fixtures in accordance with the received control signals. The ceiling fan system also includes a fixed controller that is adapted to be wall-mounted and powered by the AC power source and transmit the control signals to the receiver. At least one movable controller is adapted to be powered by a DC power source and transmit the control signals to the receiver.

In yet another aspect of the invention, a method for remotely controlling a ceiling fan including at least one light fixture includes powering the ceiling fan from an AC power source and powering a first controller from the AC power source. Control signals are transmitted from the first controller to the ceiling fan via a wireless transmission medium. One specific embodiment of the method further includes powering a second controller from a DC power source, and transmitting control signals from the second controller to the ceiling fan via the wireless transmission medium.

In another aspect of the invention, a method of controlling a ceiling fan including a motor having a stator, a rotor, and a plurality of blades mounted to the rotor so as to rotate therewith, is presented. The method includes rotating the rotor in a first direction at a first power level, receiving an instruction to rotate the rotor in a second direction, and rotating the rotor in the second direction at a second power level that is greater than the first power level.

BRIEF DESCRIPTION OF THE DRAWINGS

Other objects and advantages of the invention will become apparent upon reading the following detailed description and upon reference to the drawings in which:

FIG. **1** is a block diagram of a control system in accordance with an embodiment of the present invention;

FIG. **2** is a schematic diagram illustrating portions of an embodiment of the control system of FIG. **1**;

FIG. **3** is a front view of a fixed controller in accordance with an embodiment of the present invention;

FIG. **4** is a front view of a movable controller in accordance with an embodiment of the present invention;

FIG. **5** is a flow diagram illustrating a method of reversing a ceiling fan blade rotation in accordance with the present invention;

FIG. **6** is a block diagram illustrating an embodiment of a fixed controller in accordance with the present invention;

FIG. **7** is a circuit diagram of a power converter in accordance with a particular embodiment of the invention;

FIG. **8** is a simplified circuit diagram illustrating an operator interface, encoder and transmitter of a control device in accordance with embodiments of the present invention; and

FIG. **9** is a simplified circuit diagram illustrating a ceiling fan control unit in accordance with the present invention.

While the invention is susceptible to various modifications and alternative forms, specific embodiments thereof have been shown by way of example in the drawings and are herein described in detail. It should be understood, however, that the description herein of specific embodiments is not intended to limit the invention to the particular forms disclosed, but on the contrary, the intention is to cover all modifications, equivalents, and alternatives falling within the spirit and scope of the invention as defined by the appended claims.

DETAILED DESCRIPTION OF THE INVENTION

Illustrative embodiments of the invention are described below. In the interest of clarity, not all features of an actual implementation are described in this specification. It will of course be appreciated that in the development of any such actual embodiment, numerous implementation-specific decisions must be made to achieve the developers' specific goals, such as compliance with system-related and business-related constraints, which will vary from one implementation to another. Moreover, it will be appreciated that such a development effort might be complex and time-consuming, but would nevertheless be a routine undertaking for those of ordinary skill in the art having the benefit of this disclosure.

Turning to FIG. **1**, a block diagram of a control system **100** in accordance with an embodiment of the present invention is illustrated. The control system **100** is adapted to control a device **102** powered by an AC power source **104**. A fixed controller **106**, which is also powered by the AC power source **104**, is adapted to transmit control signals to the device **102**. At least one movable, or hand-held, controller **108** is powered by a DC power source **110**, such as a battery, and is also adapted to transmit control signals to the device **108**. The device **108** may include a plurality of functional units that are controlled by the movable and fixed controllers **106**, **108**. In an exemplary embodiment of the invention, the device **102** comprises a ceiling fan that may include one or more light fixtures. Thus, the fixed and movable controllers **106**, **108** are both adapted to send control signals for operating various functions of the ceiling fan, such as fan speed and direction. Other suitable applications for the control system **100** include a garage door opener and its associated light fixtures and other components, or a home security system.

FIG. **2** schematically illustrates one particular embodiment of the invention that is configured to control a ceiling fan **112** having a motor **113** that includes a stator and a rotor (not shown). A plurality of blades **114** are coupled to the rotor of the motor **113** so as to rotate therewith. As in typical ceiling fan implementations, the ceiling fan **112** is mounted to a ceiling **116** and receives standard household AC power **104** through a pair of wires **117** via a wall box **118**. The fixed controller **106** is situated in the wall box **118** and is also connected to the AC power **104**. The ceiling fan **112** in the exemplary embodiment of FIG. **2** includes an up-light fixture **120** situated above the ceiling fan motor **113** so as to cast light generally above the ceiling fan **112** and a standard down-light fixture **121** situated below the ceiling fan blades **114** to cast light generally below the ceiling fan **112**. Additionally, a receiver **122** adapted to receive control signals from the fixed and movable controllers **106**, **108** is mounted within the ceiling fan **112** and connected to a control unit **123**. The control signals indicate desired operating parameters for the ceiling fan motor **113** and light fixtures **120**, **121**, such as motor speed, motor rotation direction, light intensity, etc. In one particular embodiment, the fixed and movable controllers **106**, **108** are adapted to transmit the control signals via the same, wireless transmission medium. For example, the fixed and movable controllers **106**, **108** may both transmit to the receiver **122** via RF or infrared.

FIG. **3** and FIG. **4** illustrate exemplary embodiments of the fixed and movable controllers **106**, **108**, respectively, adapted for controlling a device having multiple functional units, such as the motor **113**, the up-light fixture **120** and the down-light **121** of the ceiling fan **112** illustrated in FIG. **2**. Both the fixed controller **106** and the movable controller **108** include an operator interface having a plurality of switches, such as push-button switches, and indicators thereon. For example, the fixed controller **106** illustrated in FIG. **3** includes a surface having first and second hinged lids **133**, **134** thereon, behind which are located a plurality of operating buttons, in addition to buttons and indicators situated on the face of the controller **106**. In the embodiment illustrated in FIG. **3**, there are three buttons located behind the first hinged lid **133**, including a light on/off button, a "winter" function button and a "sleep" function button (not shown). Further, three buttons are located behind the second hinged lid **134**, including a fan on/off button, a fan reverse button, and a "security" function button.

The first hinged lid **133** is configured such that the light on/off button may be activated by pushing the first hinged lid **133**. Similarly, the second hinged lid is configured such that the fan on/off button may be activated by pushing the second hinged lid **134**. The remaining buttons located behind the first and second hinged lids **133**, **134** are typically used only

occasionally. Positioning these buttons behind the first and second hinged lids **133**, **134**, and using the first and second hinged lids **133**, **134** to activate the more frequently utilized light and fan on/off buttons reduces the number of visible switches located on the face of the fixed controller **106**. Moreover, since the fixed controller is adapted to fit within a standard wall electrical box, the space available for buttons and indicators is limited. Positioning some control buttons behind the first and second hinged lids allows placing more switches and indicators in the limited space available on the fixed controller **106**. Operating buttons located on the face of the fixed controller **106** include light intensity increase and decrease buttons **135**, **129**, an up/down light control button **136**, and fan speed increase and decrease buttons **132**, **133**. Still further, the fixed controller **106** includes up and down light indicators **134**, **135** and a master on/off switch **136**.

The exemplary movable controller **108** illustrated in FIG. **4** includes a plurality of buttons and indicators that generally correspond to those included on the fixed controller **106**. Operator buttons on the particular embodiment of the movable controller **108** include a light on/off button **140**, light intensity increase and decrease buttons **142**, **143**, a fan on/off button **144**, fan speed increase and decrease buttons **146**, **147**, a fan reverse button **148**, a "sleep" function button **150**, a "winter" function button **152**, a "demo" function button **154**, a "security" function button **156** and an up/down light select switch **158**. In one embodiment, the "demo" button **154** causes the fan **112** to cycle through its various settings to demonstrate the features of the fan **112**.

The functions associated with the various buttons and indicators will be disclosed in further detail herein below. The particular operator buttons and indicators included on the fixed and movable controllers **106**, **108**, and the specific arrangement thereof, are not essential to implementing the invention. The embodiments of the fixed and movable controllers **106**, **108** illustrated in FIG. **3** and FIG. **4**, respectively, are exemplary only. It would be a routine undertaking for one skilled in the art having the benefit of this disclosure to add or remove specific operator controls, or rearrange the positions of the various buttons and indicators on the fixed and movable controllers **106**, **108**.

Some of the functions associated with the exemplary operator buttons and indicators illustrated in the embodiments of the fixed and movable controllers **106**, **108** illustrated in FIG. **3** and FIG. **4** are as follows:

Light Controls

Assuming the lights **120**, **121** are initially off, pressing the light on/off button (located under the first hinged lid **124** in FIG. **3**, and reference **140** in FIG. **4**) causes the up and down lights **120**, **121** to "ramp-up" to a preset intensity. The lights "ramp-up," in that a given one of the light fixtures increase to the preset intensity, followed by the other light fixture. For example, the up-light **120** may first ramp-up, followed by the down-light **121**. This creates an effect of the light moving from the ceiling to the floor of the room in which the ceiling fan **112** is installed. Alternatively, the down-light **121** could ramp-up first, creating an effect of the light moving from the floor to the ceiling. Ramping-up the lights in this manner minimizes the surge on the AC power source **104**. A power surge resulting from simultaneously switching on the up-light **120** and the down-light **121** could cause a reduction in the fan speed and noticeably affect the operation of other items on the same household circuit. Activating the light on/off button again causes the lights to turn off.

The light intensity level is set by the light intensity controls **128**, **129**, **142**, **143**. Activating the proper button changes the light intensity level as indicated. In the embodiments illustrated in FIG. **3** and FIG. **4**, each controller **106**, **108** includes a single set of light intensity buttons that control the intensity level for both the up-light and down-light fixtures **120**, **121**. The fixed and movable controllers **106**, **108** each also include a function to select the desired light fixture to be adjusted with the light intensity controls **128**, **129**, **142**, **143**. In this manner, each light fixture **120**, **121** may be set to a different intensity level. For instance, the intensity for the down-light fixture **121** may be completely turned down, or off, such that only the up-light **120** comes on when the light on/off button is activated.

In the exemplary embodiment of the fixed controller **106** illustrated in FIG. **3**, the up/down light select function is performed by a push-button up/down light control **130**, together with the up and down light indicators **134**, **135**, which, in one embodiment, comprise LEDs. Activating the up/down light control **130** toggles between control of the up-light **120** and the down-light **121**, and the up and down light indicators **134**, **135** show which light fixture is being controlled. The embodiment of the fixed controller illustrated is adapted to fit in a standard wall electrical box. To this end, using the push-button up/down light control **130** and the indicators **134**, **135** reduces the space required for achieving the desired controls. Referring now to FIG. **4**, the up/down light select switch **158** for the movable controller **108** is set to the up-light or down-light setting, as desired, to control the respective light.

Thus, to preset the light fixtures **120**, **121** to a desired level that will be achieved when the lights are turned on, the user first selects which light is to be adjusted. With the exemplary fixed controller **106**, when the up-light indicator **134** is lit, the user has control of the up-light **120**, and when the down-light indicator **135** is lit, the user has control of the down-light **121**. Alternatively, the select switch **158** for the exemplary movable controller **108** is set to the proper position to select the light to be adjusted. Once the user has selected the light to be adjusted, the intensity controls **128**, **129**, **142**, **143** are activated until the light is at the desired level. The user may then switch control to the other light to set the intensity to the desired level. The selected light levels become the preset levels that the lights will turn on to when the light on/off button is activated.

The embodiments of the fixed and movable controllers **106**, **108** further include a security function button (located under the second hinged lid **126** in FIG. **3**, and reference **156** in FIG. **4**). In a particular embodiment of the invention, activating the security function causes the lights to flash, then come on to full brightness. The lights remain on for a random time, then turn off and on at random times, giving the impression that someone is occupying the room or facility in which the ceiling fan **112** is installed. Pushing the light on/off button cancels the security function.

Fan Controls

Activating the fan on/off button (located under the second hinged lid **126** in FIG. **3**, and reference **144** in FIG. **4**) causes the fan to turn on to a preset speed and direction. Activating the fan on/off button again causes the fan to turn off. One embodiment of the fan includes six different operating speeds, though the present invention may be implemented with a fan capable of operating at any number of speed levels. As with the light controls, the preset fan speed and direction are the direction and speed in effect when the fan was previously turned off. To adjust the speed, the appropriate control **132**, **133**, **146**, **147** is activated. The reverse button (located under the second hinged lid **126** in FIG. **3**,

and reference **148** in FIG. **4**) causes the fan direction to change when the control is activated.

The embodiments of the fixed and movable controllers **106**, **108** also include the "sleep" function buttons and the "winter" function buttons (located under the first hinged lid **124** in FIG. **3**, and references **150** and **152**, respectively, in FIG. **4**). The sleep function causes the fan speed to gradually decrease until the fan is off. This allows a user to go to sleep with the fan operating at a desired speed. As the evening progresses, and the temperature falls, the fan speed reduces until the fan turns off. The winter function causes the fan to operate in an up-flow direction at low speed. At predetermined intervals, the fan turns up to a higher speed for a predetermined period, then returns to low speed. In one embodiment, the fan runs at low speed for ten minutes, then increases to full speed for three seconds before returning to low speed.

In accordance with one embodiment of the invention, the fan control system includes a speed sensitive "dynamic" reverse that is activated by the reverse function buttons (located under the second hinged lid **126** in FIG. **3**, and reference **148** in FIG. **4**). FIG. **5** is a flow diagram illustrating a method of reversing the ceiling fan **112** rotation direction, in accordance with the present invention. Assume the fan **112** is operating at a given power level such that the rotor is turning the blades **114** in a first direction at a desired speed, as indicated in block **170**. Upon activation of the reverse button, the ceiling fan **112** receives the instruction to change direction (block **172**). In response to receiving the instruction, the rotation direction is changed (block **174**), and the power is increased (block **176**). In a particular embodiment, the power shuts off for a predetermined time period, for example, two seconds, prior to increasing the power in block **176** to protect the system's electronics. The power level increase may be for a predetermined time period, then the power level is reduced to the power level required to achieve the desired rotation speed. This causes the rotation direction to quickly reverse.

In one particular embodiment, the power is increased to full power upon changing rotation direction, though any increased power level may be used. Further, in one embodiment, the predetermined time period during which the power level is increased is based, at least in part, on the fan speed. For example, if the fan is operating at a low speed when the reverse function is activated, the period of increased power, or power "boost," is relatively short. In comparison, if the fan is operating at a higher speed, the power boost is longer, as it will take longer to reverse the fan when it is operating at a faster speed. In additional embodiments, the power boost may be determined based on additional, or different factors. For example, if a user operates the fixed or movable controller **106**, **108** to change both the rotation direction and speed, the power boost period may be determined by the new desired speed, rather than the speed at which the fan was operating prior to initiating the reverse function.

Turning now to FIG. **6**, an embodiment of the fixed controller **106** is illustrated in block diagram form. The fixed controller **106** is connected to the AC power source **104** that powers the device **102**, such as the ceiling fan **112**. The AC power source may comprise a typical household power source. A power converter **180** receives AC voltage from the AC power source **104** and converts it to DC voltage for powering the fixed controller **106**. An operator interface **182** including, for example, operator buttons and indicators as illustrated and disclosed in conjunction with FIG. **3**, is coupled to an encoder **184**. The encoder **184** converts the input as received via the operator interface **182** into signals that are sent to the ceiling fan **112** (not shown in FIG. **7**) via a transmitter **186**. In an alternative embodiment, operator commands from the operator interface **182** are provided directly to the transmitter **186**, thus eliminating the encoder **184**. In one embodiment, the transmitter **186** is adapted to send the control signals to the ceiling fan **112** via a wireless medium, such as RF or infrared.

Powering the fixed controller **106** via the AC power source **104** eliminates the need for a separate DC power source, such as a battery, for powering the fixed controller **106**. In one embodiment of the invention, the fixed controller **106** is adapted to fit into a standard wall electrical box. Eliminating the need for one or more batteries reduces the amount of space required for the fixed controller **106**.

In one exemplary embodiment, the power converter **180** comprises a half-wave rectifier that receives standard household 120 volt AC power and converts it to approximately 10 volts DC for powering the fixed controller **106**. Thus, the power converter **110** only "steals" power from a portion of the ceiling fan power supply, rather than stealing power from both the positive and negative portions of the input AC waveform. Powering the fixed controller **106** in this manner is essentially transparent to the ceiling fan **112** and light fixtures **120**, **121**, preventing noticeable reductions in fan speed or light brightness resulting from power lost to the fixed controller **106**.

FIG. **7** illustrates a circuit diagram of a power converter **181** in accordance with a particular embodiment of the invention. The power converter **181** includes first and second AC input terminals AC**1**, AC**2** that are adapted to be coupled to the AC power source **104** powering the ceiling fan **112**. A diode **190** is coupled between the first and second AC input terminals AC**1**, AC**2**. As illustrated in FIG. **7**, the diode **190** is connected such that it conducts when the first AC input terminal AC**1** is negative with respect to the second AC input terminal AC**2**. Consequently, the power converter **181** only "steals" power from the ceiling fan **112** during the positive portion of the AC input waveform.

First and second DC output terminals, comprising a positive source voltage terminal V_{dd} and a common, or ground terminal V_{ss}, are coupled in series with the first and second AC input terminals AC**1**, AC**2**, respectively. An SCR **192** is coupled between the first and second AC input terminals AC**1**, AC**2**, with its gate terminal coupled to the first AC input terminal AC**1** through a resister **194** and a zener diode **196**. A diode **198** is coupled in series between the first AC input terminal AC**1** and the V_{dd} terminal, and a filter capacitor **200** is coupled between the V_{dd} terminal and the V_{ss} terminal.

The values for the zener diode **196** and the resistor **194** are selected such that the SCR **192** conducts when the voltage at the first AC input terminal AC**1** reaches a predetermined level necessary to achieve the desired output DC voltage at the V_{dd} terminal. In one embodiment, the resistor **194** is a 100 ohm resistor, and the filter capacitor **200** is a 220 microfarad capacitor, thus achieving +10 volts DC at the DC output terminals V_{dd}, V_{ss}, without noticeably affecting the speed of the fan motor **113** or the brightness of the lights **120**, **121**.

FIG. **8** is a simplified block diagram illustrating a circuit embodying the operator interface **182**, the encoder **184**, and the transmitter **186**. Input voltage for the circuit is provided via first and second DC input voltage terminals **202**, **203**. In the particular embodiment illustrated, the first and second DC input voltage terminals **202**, **203** are coupled to the DC

output terminals V_{dd}, V_{ss} of the power converter **181** illustrated in FIG. **7**. The operator interface **182** includes a plurality of push-button switches **211–221**, which may correspond to the plurality of buttons on the fixed controller illustrated in FIG. **3**. In one embodiment, the push-button switches **211–221** are assigned functions as follows:

Switch 211	Security
Switch 212	Light on/off
Switch 213	Sleep
Switch 214	Light intensity increase
Switch 215	Light intensity decrease
Switch 216	Up/down light select
Switch 217	Fan speed increase
Switch 218	Fan speed decrease
Switch 219	Fan reverse
Switch 220	Fan on/off
Switch 221	Winter

Two light-emitting diodes (LED) **222**, **223** provide the up and down light indicator function, respectively. The push-button switches **211–221** and the LEDs **222**, **223** are coupled to a controller **230**, which may, for example, comprise a Zilog model Z86E02 microcontroller chip. The outputs of the controller **230** are input into the encoder **184**, which outputs a control signal to the transmitter **186** that, in turn, is sent to the receiver **122** to control the ceiling fan **112**. In an alternative embodiment, the controller **230** is eliminated by coupling the push-button signals **211–221** directly to the encoder **184**, via discrete components (for example, diodes and resistors) arranged convert the user command (as indicated by the push-button switches **211–221**) into a unique input signal for the encoder **184**.

In the embodiment illustrated in FIG. **8**, the encoder **184** comprises a Motorola MC145026 encoder. A four position DIP switch **232** allows a user to input a controller select code that corresponds to the remote select code at the receiver **122**. The provision of the DIP switch **232** allows for controlling a single ceiling fan **112** with a plurality of fixed or remote controllers **106**, **108**, or for controlling multiple ceiling fans located in close proximity with different controllers. The data output terminal **231** of the encoder **184** is coupled to a resonator **234**, which is coupled to a transmit antenna **236** for transmitting the control signal to the receiver **122** associated with the ceiling fan **112**. In one embodiment, the resonator **234** comprises a SAW resonator, such as a model RO2104 SAW resonator available from RF Monolithics, Inc., and the transmitter **186** operates at 303.825 MHz. In alternative embodiments, the encoder **284** may be eliminated by programming the encoder **284** functions into the controller **230** and providing the output from the controller **230** directly to the transmitter **186**.

The movable controller **108** may employ circuits similar to those disclosed in conjunction with FIG. **8** above. The movable controller **108** is powered by a separate DC power source, such as a battery. The embodiment of the movable controller **108** illustrated in FIG. **4** also utilizes a slide switch **158**, rather than the combination of the push-button switch **216** and the first and second LEDs **222**, **223**. Further, the embodiment disclosed in conjunction with FIG. **8** uses RF as its transmission medium. However, it would be a routine undertaking for one skilled in the art having the benefit of this disclosure to reconfigure either, or both, of the fixed and movable controllers **106**, **108** to transmit via another wireless medium, such as infrared.

An exemplary embodiment of the control unit **123** is illustrated in the simplified block diagram of FIG. **9**. The control unit **123** is connected to the receiver **122**, which receives the control signal sent by the transmitter **186** via an antenna **240**. In one embodiment, both the receiver **122** and the control unit **123** are mounted within the canopy of the ceiling fan **112**. The receiver **122** in the embodiment illustrated is a standard RF receiver that is configured to receive the 303.825 MHz transmission from the transmitter **186**. However, as with the transmitter **186**, the receiver **122** may be modified to receive signals transmitted via another wireless medium from the fixed and variable controllers **106**, **108**, such as infrared.

The received signal is input to a decoder **242** that corresponds to the encoder **184**. Thus, in one embodiment, the decoder comprises a Motorola MC145027 decoder. A four position DIP switch **244** corresponds to the DIP switch **232** utilized in the fixed or movable controller **106**, **108**, and is also coupled to the decoder **242** as an input thereto. The data output of the decoder **242** is input to a processor **246** that is programmed with the control functions. As with the encoder **284**, the decoder **242** may be eliminated by programming the decoder functions into the processor **246**. A model 16C558 microcontroller available from Microchip Technology, Inc. is a suitable processor **246**. The data output of the decoder **242** is also coupled to a piezo transducer **248** that acknowledges receipt of a control signal.

Power is provided to the control unit **123** via the AC power supply **104** at first and second AC input terminals AC1, AC2, which, for example, may comprise standard household 60 Hz 120 volts AC. The AC input terminals AC1, AC2 of the AC power supply **104** are connected to a step-down transformer **250** or other voltage step-down means such as a capacitor, and to a rectifier **252**. A voltage regulator **254** is coupled to the rectifier **252** to provide a DC voltage source $-V_{ss}$. In one embodiment, the voltage regulator **254** comprises an LM7905 voltage regulator, and $-V_{ss}$ is −5 volts. A zero-cross detector **256** provides a signal to the processor **246**, identifying the time the AC wave of the AC power supply **104** crosses zero.

The up and down lights **120**, **121** are coupled across the AC input terminals AC1, AC2 through respective triacs **258**, **259**. The processor **246** provides trigger pulses to the light triacs **258**, **259** to control the intensity of the up and down lights **120**, **121**. The ceiling fan motor **113** is also coupled across the AC input terminals AC1, AC2 through a reversing relay **260**. The reversing relay **260** is coupled to a speed control device, which in the illustrated embodiment, includes a network of speed control capacitors **271–274**. According to the desired speed, the processor varies the number of capacitors and thus, the amount of capacitance, coupled in series with the windings of the motor **113**. In one embodiment, the capacitors **271**, **272**, **273** and **274** have values of 0.1, 9, 7, and 4 microfarads, respectively. Controlling motor speed via capacitors is disclosed in detail in U.S. Pat. No. 4,408,150 by Holston et al., which is assigned to Emerson Electric Co., the assignee of the present application. The entire contents of U.S. Pat. No. 4,408,150 is incorporated by reference herein in its entirety.

In the illustrated embodiment, four triacs **281–284** are fired by the processor **246** to control the number of capacitors **271–274** coupled to the motor **113**. The speed control capacitor **271** has a resistor **286** coupled in series therewith, and the remaining speed control capacitors **272**, **273**, **274** each have a resistor **288** coupled in parallel therewith for discharging the respective capacitor **271–274** when it is decoupled from the motor **113**. In one embodiment, resistor **286** is a 100Ω resistor, and resistors **288** each are 33kΩ resistors. The triacs **282**, **283**, **284** and the corresponding

speed control capacitors **272**, **273**, **274** each have a resistor **290** coupled in series therebetween to limit the initial current flow through the respective triac **282**, **283**, **284** when it is fired by the processor **246**, extending the life of the triac **282**, **283**, **284**. In an exemplary embodiment, the resistors **290** are 4.7Ω resistors.

In a particular embodiment, the processor **246** is programmed to provide triggering pulses to the triacs **281–284**. Triggering the motor control triacs **281–284** by pulses rather than constant logic level voltages to the gates of the triacs **281–284** reduces the amount of current consumed in the system, and thus, allows for use of a smaller power supply. In the embodiment illustrated in FIG. **9**, the processor **246** operates the motor **113** at six different speeds by controlling the four triacs **281–284**. In a specific embodiment, the up and down light triacs **258**, **259** comprise BTA08-600S sensitive gate triacs, and the motor control triacs **281–284** comprises BTA06-600S sensitive gate triacs, available from STMicroelectronics.

In one embodiment, the processor **246** is programmed to turn off the triacs **281–284** to remove power from the fan motor **113** for a predetermined time period, for example, one second, prior to switching the relay **260**. This prevents arcing the contacts of the relay **260** and allows use of a smaller relay **260** than in conventional implementations. In accordance with the method of reversing fan direction disclosed in conjunction with FIG. **5**, following the predetermined time period, the relay **260** is activated by the processor **246** to reverse the rotation direction, then the appropriate motor control triacs **281–284** are fired to provide the increased power level to the motor **113** to quickly reverse the rotation direction of the fan blades **114**.

It will be appreciated by those of ordinary skill in the art having the benefit of this disclosure that the embodiment illustrated above is capable of numerous variations without departing from the scope and spirit of the invention. It is fully intended that the invention for which a patent is sought encompasses within its scope all such variations without being limited to the specific embodiment disclosed above. Accordingly, the exclusive rights sought to be patented are as described in the claims below.

What is claimed is:

1. A control system for a device powered by an AC power source, the control system comprising:

a fixed controller adapted to be wall-mounted, the fixed controller adapted to be powered by the AC power source and transmit control signals to the device via a transmission medium; and

at least one movable controller adapted to be powered by a DC power source and transmit control signals to the device via the same transmission medium as the fixed controller.

2. The control system of claim **1** wherein the transmission medium comprises RF.

3. The control system of claim **1** wherein the transmission medium comprises infrared.

4. The control system of claim **1**, wherein the device includes a plurality of functional units, and wherein the movable and fixed control devices are adapted to control the plurality of functional units.

5. The control system of claim **4**, wherein the plurality of functional units includes a ceiling fan and at least one light fixture.

6. The control system of claim **5**, wherein at least one light fixture comprises an up-light module adapted to cast light generally above the ceiling fan, and a down-light module adapted to cast light generally below the ceiling fan.

7. The control system of claim **6**, wherein the movable and fixed control devices each include an indication of which light module is being controlled.

8. The control system of claim **6** wherein the indication comprises a slide switch.

9. The control system of claim **6** wherein the indication comprises an LED.

10. The control system of claim **1**, wherein the fixed controller includes:

a first hinged lid coupled to a surface of the fixed controller for pivotal movement thereon;

a plurality of switches situated on the surface;

the first hinged lid being movable by a user to a first position to expose the switches;

the first hinged lid being movable by a user to a second position to cover the switches; and

the first hinged lid being adapted to activate one of the plurality of the switches when the first hinged lid is pushed by a user.

11. A method of controlling a ceiling fan including a motor having a stator, a rotor, and a plurality of blades mounted to the rotor so as to rotate therewith, the method comprising:

rotating the rotor in a first direction at a first power level;

receiving an instruction to rotate the rotor in a second direction; and

rotating the rotor in the second direction at a second power level that is greater than the first power level.

12. The method of claim **11** further comprising rotating the rotor in the second direction at the second power level for a predetermined time period.

13. The method of claim **11** wherein rotating the rotor in the second direction at a second power level comprises rotating the rotor the second direction at full power.

14. The method of claim **11** further comprising removing power from the motor for a predetermined time period prior to rotating the rotor in the second direction.

15. The method of claim **12** further comprising:

receiving an instruction to rotate the rotor in the second direction at a third power level; and

rotating the rotor in the second direction at the third power level following the predetermined time period.

16. The method of claim **12** wherein the predetermined time period is based at least in part on the first power level.

17. The method of claim **15** wherein the predetermined time period is based at least in part on the third power level.

18. The method of claim **11** wherein receiving the instruction to rotate the rotor in a second direction further comprises receiving the instruction transmitted from at least one of a fixed controller or a movable controller via a wireless transmission medium.

19. A fixed controller for a ceiling fan powered by an AC power source, comprising:

a power converter adapted to receive AC power from the AC power source and supply DC power to the fixed controller; and

a transmitter adapted to send wireless control signals to the ceiling fan.

20. The fixed controller of claim **19** wherein the power converter comprises a half-wave rectifier.

21. A method for remotely controlling a ceiling fan including at least one light fixture, comprising:

powering the ceiling fan from an AC power source;

powering a first controller from the AC power source; and

transmitting control signals from the first controller to the ceiling fan via a wireless transmission medium.

22. The method of claim **21**, further comprising:

powering a second controller from a DC power source; and

transmitting control signals from the second controller to the ceiling fan via the wireless transmission medium.

23. The method of claim **21**, wherein powering the first controller from the AC power source includes applying an AC voltage from the AC power source to a half-wave rectifier.

24. A remote control unit for controlling a ceiling fan including at least first and second light fixtures, the remote control unit comprising:

a first switch for selecting one of the first or second light fixtures for control;

a device that indicates which one of the first or second light fixtures is being controlled; and

a second switch operable to control both the first and second light fixtures as selected via the first switch.

25. The remote control unit of claim **24**, wherein the first and second light fixtures comprise an up-light module adapted to cast light generally above the ceiling fan, and a down-light module adapted to cast light generally below the ceiling fan, respectively.

26. The remote control unit of claim **24**, wherein the switch comprises a push-buttton switch.

27. The remote control unit of claim **24**, wherein the switch comprises a slide switch.

28. The remote control unit of claim **24**, wherein the device comprises at least one LED.

29. The remote control unit of claim **24**, wherein the remote control unit is movable.

30. The remote control unit of claim **24**, wherein the remote control unit is fixed.

31. A ceiling fan system, comprising:

a ceiling fan including a motor, the motor having a stator and a rotor adapted to rotate relative to the stator, the motor adapted to be coupled to an AC power source;

a plurality of blades coupled to the rotor so as to rotate therewith;

first and second light fixtures coupled to the AC power source;

a control unit coupled to the motor and the light fixtures, the control unit adapted to receive control signals indicating operating parameters for the motor and light fixtures and control operation of the motor and the light fixtures in accordance with the received control signals;

a fixed controller adapted to be wall-mounted and powered by the AC power source and transmit the control signals to the receiver via a transmission medium; and

at least one movable controller adapted to be powered by a DC power source and transmit the control signals to the receiver via the same transmission medium as the fixed controller.

32. The ceiling fan system of claim **31**, wherein the transmission medium comprises RF.

33. The ceiling fan system of claim **31**, wherein the transmission medium comprises infrared.

34. The ceiling fan system of claim **31**, wherein the first and second light fixtures comprise an up-light fixture and a down-light fixture.

35. The ceiling fan system of claim **31**, wherein the control unit includes a plurality of capacitors and a device adapted to couple and decouple preselected capacitors to the motor to vary the speed of the motor.

36. The ceiling fan system of claim **35**, wherein the device includes a processor coupled to a plurality of triacs, the processor operable to fire the triacs to couple and decouple preselected capacitors to the motor in response to the control signals.

37. The ceiling fan system of claim **35**, further comprising a plurality of resistors coupled to the capacitors so as to discharge the capacitors when the capacitors are decoupled from the motor.

38. The ceiling fan system of claim **36**, further comprising a plurality of resistors coupled to the triacs so as to limit the current flow through the triacs when the triacs are fired by the processor.

39. The ceiling fan system of claim **36**, wherein the plurality of capacitors comprises four capacitors and the plurality of triacs comprises four triacs, and wherein the triacs are controlled by the processor so as to operate the motor at six predetermined speeds.

* * * * *