Installation Guide

Haiku® 60

A2

Installation Guide:
Jan. 2014
Rev. N

Model Number: K3150-A2
S3150-A2

May be protected by one or more of the following patents: www.bigasssolutions.com/patents

Haiku and the Haiku logo are trademarks of Delta T Corporation, registered in the United States and/or other countries. The information contained in this document is subject to change without notice.

Thank you for buying the world's most innovative fan. Please take a few moments to register your fan with us online at www.haikufan.com/warrantyregistration.

This product is sold by a plant whose Management System is certified as being in conformity with ISO 9001:2008.

4004784
4004783

Conforms to ANSI/UL STD 507–Electric Fans
Certified to CAN/CSA C22.2 No. 113–Fans & Ventilators

This device complies with Part 15 of the FCC Rules. This device complies with Canada ICES-003, Class B.

Contents

INTRODUCTION

1 About Haiku
Technical specifications

2 Parts & hardware
Fan diagram

PREPARATION

3 Unpacking your fan
Determining fan location

4 Tools needed
Preparing the mounting location

FAN ASSEMBLY

5 Installing the airfoils

6 Installing the lower cover
Installing the wiring cover & trim

FAN MOUNTING (OUTLET BOX)

7 Attaching the mounting bracket
Hanging the fan
Securing the safety cable

FAN MOUNTING (CONCRETE CEILING)

8 Preparing the ceiling hook
Hanging the fan
Securing the safety cable

OPTIONAL HANGER PLATE

9 Installing the anchor bolts
Securing the hanger plate
Installing the safety anchor hook
Hanging the fan
Securing the safety cable

ELECTRICAL

10 Wiring the fan
Installing the wiring cover

11 Wire color chart
Wiring diagram (without EMI filter)

12 Wire color chart
Wiring diagram (with EMI filter)

13 Wire color chart
Wiring diagram (with terminal strip)

OPERATION

14 Powering the fan
Replacing remote control battery
Changing fan speed
Sleep mode
Timer mode
Whoosh mode

15 Operating the light
Reversing fan rotation
Fan mode indicators

TROUBLESHOOTING

16 General troubleshooting

MAINTENANCE

17 Annual maintenance

IMPORTANT SAFETY INSTRUCTIONS

Read and save these instructions prior to installing and operating your Haiku. Retain this installation guide for maintenance and troubleshooting information. If you have further questions, contact Haiku Customer Service at www.haikufan.com/service.

WARNING: To reduce the risk of fire, electric shock, and serious bodily injury to persons, observe the following:

- Installation work and electrical wiring must be done by qualified person(s) in accordance with all applicable codes and standards.
- When cutting or drilling into ceiling, do not damage electrical wiring and other hidden utilities.
- Use this fan only in the manner intended by the manufacturer.

CAUTION: The installation of this fan must be in accordance with the requirements specified in this installation manual and with all national and local electrical codes. Code compliance is ultimately YOUR responsibility!

WARNING: If installing the fan in Australia, a licensed electrician must perform the electrical installation.

CAUTION: Exercise caution and common sense when powering the fan. Do not connect the fan to a damaged power source. Do not attempt to resolve electrical malfunctions or failures on your own.

WARNING: The fan must be used with the supplied remote control. Other parts cannot be substituted.

CAUTION: When service or replacement of a component in the fan requires the removal or disconnection of a safety device, the safety device must be reinstalled or remounted as previously installed.

WARNING: Power must be disconnected before installation and servicing, cleaning, and other user-maintenance. Failure to disconnect power creates risk of fire, electric shock, and serious bodily injury.

CAUTION: The product warranty will not cover equipment damage or failure that is caused by improper installation or operation.

WARNING: To reduce the risk of fire, electric shock, or serious bodily injury when mounting the fan to an outlet box, mount the fan to an outlet box that is suitable for fan support, and use the mounting screws provided with the outlet box. Outlet boxes used for luminaires are usually not acceptable for fan support and may need to be replaced. If in doubt, consult a qualified electrician.

CAUTION: The fan must be mounted a minimum of 7 ft (2.1 m) from the floor and 3 ft (1 m) from the nearest wall. If installing the fan in southeast Asia, the fan must be mounted a minimum of 2.4 m from the floor. The ceiling should be stable with no shaking, high vibrations, or heavy impacts.

WARNING: Do not install the fan in an environment that is excessively dusty, conductive, corrosive, or gas-filled, is exposed to open flames, e.g., gas-burning stoves, is near strong chemicals or solvents, or where there is excessive heat, shock, or vibration.

WARNING: Do not bend the airfoils when installing or servicing the fan. Do not insert foreign objects in between the rotating fan airfoils.

CAUTION: This fan is not intended for use by persons (including children) with reduced physical, sensory, or mental capabilities, or lack of experience and knowledge, unless they have been given supervision or instruction concerning the use of the fan by a person responsible for their safety. Children should be supervised to ensure that they do not play with the fan.

WARNING: Before installing or servicing the fan, ensure power is disconnected.

CAUTION: Haiku (K3150-A2) is rated for use in damp environments and can be operated indoors or outdoors. Haiku Bamboo (S3150-A2) is not rated for damp environments and must be operated indoors only.

CAUTION: The fan will begin rotating when power is applied.

CAUTION: Do not use the fan with a dimmer switch.

©2013 DELTA T CORP. ALL RIGHTS RESERVED.

INTRODUCTION

Thank you for your Haiku purchase and congratulations on your selection of an elegant, efficient, and cost-effective way to stay cool! We are proud to assure you that the fan you have chosen is backed by extensive research, thorough testing, and quality manufacturing.

If you have any questions or comments, please contact Customer Service by visiting our Web site at www.haikufan.com/service.

About Haiku®

Haiku products are inspired by the seamless integration of natural forms and materials with the latest technologies. Haiku fans consume up to 80% less energy than traditional ceiling fans and maximize the sustainable use of global resources so you can now help save the planet in STYLE. Backed by the engineering resources of Big Ass Fans, the fan of choice for smaller spaces that need extraordinary air movement is crystal clear—it's Haiku.

Technical specifications

Before assembling and installing your fan, review the technical specifications in the table below. A fan diagram and parts list can be found on the following page.

Model	Haiku® / Haiku® Bamboo
Model number	K3150-A2 / S3150-A2
Fan diameter	60 in. (1.5 m)
Number of airfoils	3
Weight	13.2 lb (6 kg)
Number of fan speeds	7
Operating voltage	100–240VAC 1Φ
Operating frequency	50–60 Hz
Full load amps	0.363A
Wattage	Max: 60 Watts Min: 4 Watts
Ambient operational temperature range	32°–104° F (0–40° C)
Operational humidity range	20–90% non-condensing
Status indication	LED display

Parts and hardware

If you are missing any parts or hardware required for the installation or operation of your Haiku, contact Haiku Technical Service. Note: Drawings below are not to scale.

1. Rubber bushing
2. Mounting bracket[1]
3. Wiring cover
4. Wiring cover trim
5. Lower cover
6. (3) Airfoil
7. Motor hub
8. Remote control
9. EMI filter[2]
10. Mounting hardware
    - M8 Bolt
    - 8 mm Flat washer
    - 8 mm Lock washer
    - M8 Nut
    - 2 mm x 2 mm Split pin
    - Safety cable shackle[3]
11. Airfoil hardware
    - (6) 5 mm Lock washer
    - (6) M5 Airfoil screw
    - (6) Airfoil grommet[4]
12. Wiring hardware
    - (4) Wire nut
    - (2) Wiring cover screw

1. Needed for outlet box mounting only.
2. If the EMI filter is included with your fan (country dependent), please install it with your fan.
3. Safety cable is not shown.
4. Haiku Bamboo only.

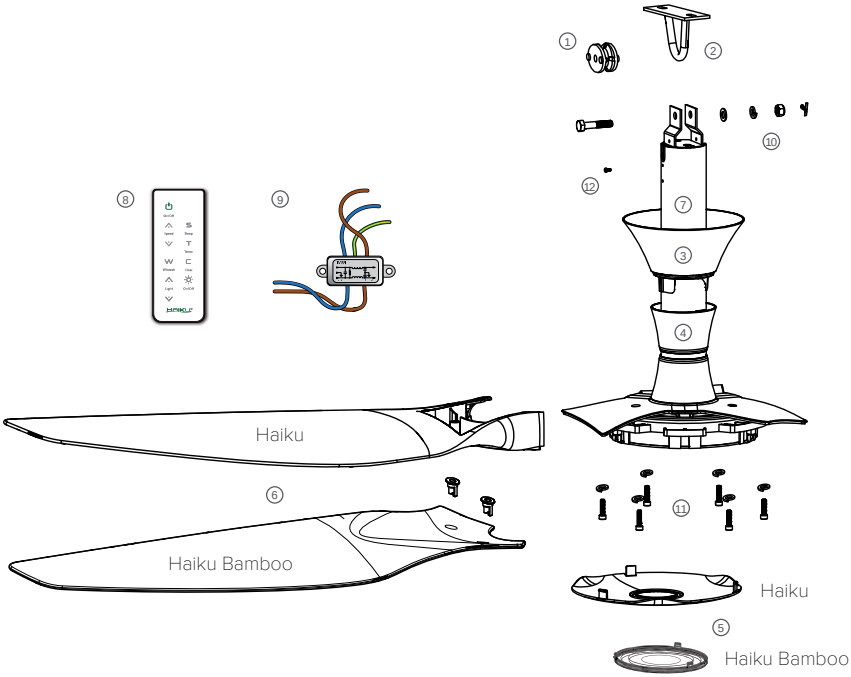

©2013 DELTA T CORP. ALL RIGHTS RESERVED.

Preparation

Before assembling and operating your fan, review the following tips and guidelines to ensure a safe and easy installation, particularly the safety guidelines on page ii. If you are not completely comfortable or have questions about any aspect of the installation process, consult a structural engineer or electrical contractor or contact Haiku Technical Service before beginning installation.

Unpacking the fan

As you remove the fan from its packaging, make sure you are not missing any components required for assembly and operation. Refer to the fan diagram and the Parts and Hardware section for a list of components. If you are missing a part required for installation, contact Haiku Technical Service.

⚠ **If you ordered multiple fans, be sure to keep the components of each fan together! Certain fan components are not interchangeable.**

Determining fan location

Consider the following guidelines as you decide where to install your Haiku:

- Do not mount the fan in an environment that is excessively dusty, conductive, corrosive, or gas-filled, near strong chemicals or solvents, or where there is excessive heat, shock, or vibration.
- Do not install the fan near open flames such as those from a gas stove.
- The ceiling should be stable with no high vibrations, shaking, or heavy impacts.
- Install the fan so that the airfoils are at least 7 ft (2.1 m) above the floor. If installing the fan in southeast Asia, ensure that the airfoils are at least 2.4 m above the floor.
- Make sure the space around the fan has a clearance of at least 3 ft (1 m) from obstructions such as cabinets, doors, or lighting fixtures.
- Make sure the space between the fan and ceiling is clear of any obstructions.
- Outlet box mounting: Install the fan where there is an outlet box or ceiling joist that is suitable for fan support.
- Concrete ceiling mounting: Install the fan where there is a ceiling hook or other sufficient structural support in the ceiling. If there is no ceiling hook at the fan site, the optional hanger plate can be installed. *The concrete mounting method is not available in North America.*

Petitioner Minka – EX1021
Page 7 of 23

Tools needed

You will need the following tools to install the fan. If you are installing an outlet box, additional tools may be necessary. Consult the outlet box manufacturer's instructions.

- Ladder
- Hex key (provided)
- Wire stripper
- Adjustable wrench
- #1 Phillips screwdriver

Preparing the mounting location

For mounting methods not covered in this manual, contact Haiku Customer Service.

If you are mounting your fan to a ceiling-mounted outlet box, the outlet box must be suitable for fan support. If there is not an outlet box at the location where you are installing your fan, one must be installed on a ceiling joist or beam and properly wired. At least 8" (20 cm) of wiring should be hanging from the outlet box. The illustration below shows a typical outlet box used for fan installations.

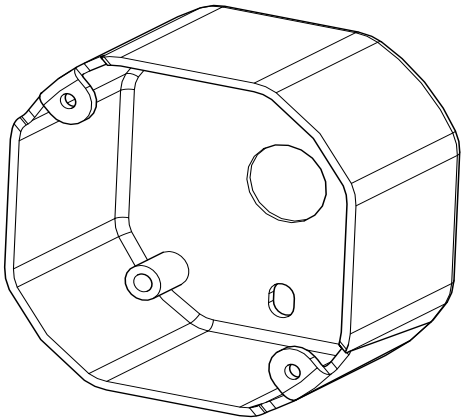

©2013 DELTA T CORP. ALL RIGHTS RESERVED.

FAN ASSEMBLY

Review the safety guidelines. If you are not completely comfortable or have questions about any aspect of the installation process, consult a structural engineer or electrical contractor or contact Haiku Technical Service for assistance.

Step 1. Installing the airfoils

Position the fan upside-down. Remove the protective covering from the bottom of the fan.

Moving clockwise around the fan, align each airfoil with a fan hub tab and firmly press it into place. ***Make sure that the colored stickers match the colors of the stickers on the attachment of the fan hub.*** Loosely secure the airfoils with the provided (6) airfoil screws and grommets. Once the airfoils are in position, fully tighten the screws to secure the airfoils to the fan hub.

tip! *Visit www.haikufan.com to view installation videos illustrating the airfoil installation process.*

⚠ **Be careful not to damage the circuit board while installing airfoils!**

Haiku® Bamboo

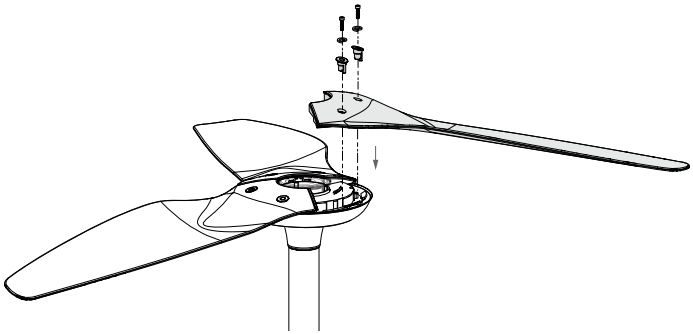

Haiku®

tip! *To ease airfoil installation, the (3) motor top screws can be loosened. Do not forget to retighten them!*

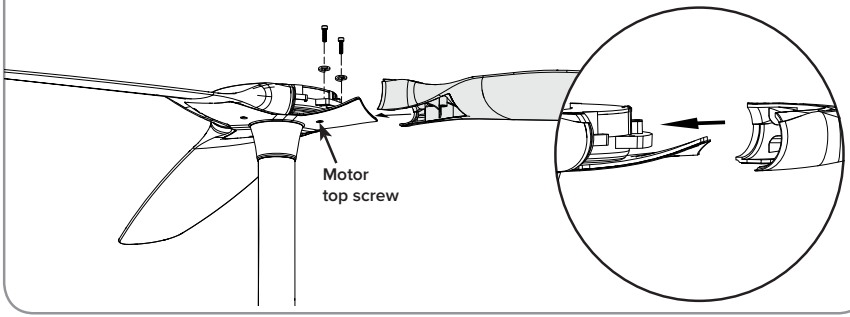

Step 2. Installing the lower cover

If you purchased the wall control kit or LED light kit, proceed to the instructions included with the kit. If installing both kits, install the wall control kit first. Return to these instructions once the kits are installed.

Align the three tabs on the lower cover with the three slots in the undersides of the airfoils and secure.

Haiku® Bamboo

For Haiku Bamboo, simply snap the lower cover to the bottom of the fan hub.

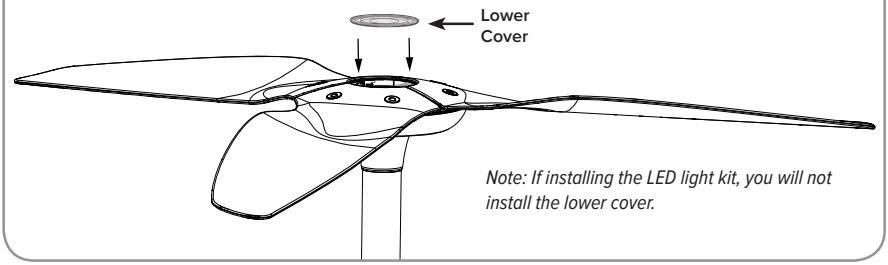

Note: If installing the LED light kit, you will not install the lower cover.

Haiku®

For Haiku, position the lower cover, and then place both hands flat on the cover and turn clockwise to lock the lower cover into place.

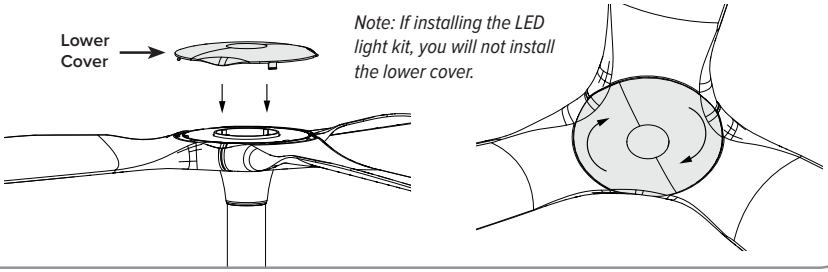

Note: If installing the LED light kit, you will not install the lower cover.

Step 3. Installing the wiring cover and trim

With the fan in the upright position, remove the protective covering from the extension tube.

Slide the wiring cover and wiring cover trim over the extension tube, resting them on the fan hub.

If mounting the fan to a ceiling-mounted outlet box, proceed to *Fan Mounting (Outlet Box)* on the following page. If mounting the fan to a concrete ceiling, proceed to *Fan Mounting (Concrete Ceiling)* on page 8.

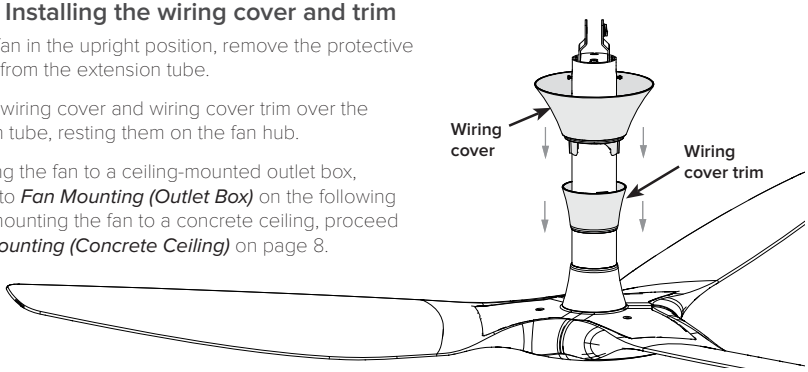

©2013 DELTA T CORP. ALL RIGHTS RESERVED.

FAN MOUNTING (OUTLET BOX)

⚠ **The ceiling-mounted outlet box must be suitable for fan support.**

Step 4. Attaching the mounting bracket

Ensure wiring has been routed to the fan site.

Secure the mounting bracket to the outlet box with the hardware supplied with the outlet box. Seat the rubber bushing in the eye of the mounting bracket as shown.

⚠ **Make sure to mount the bracket in the correct mounting holes on the outlet box!**

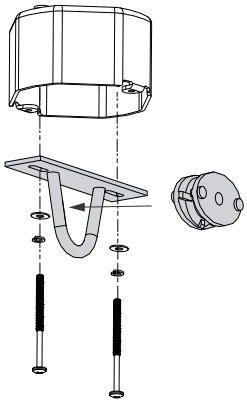

Step 5. Hanging the fan

Raise the fan to mounting bracket, and then attach it by securing the extension tube bracket to the mounting bracket with the mounting hardware as shown below.

⚠ **Be careful not to drop any hardware in the wiring cover during installation!**

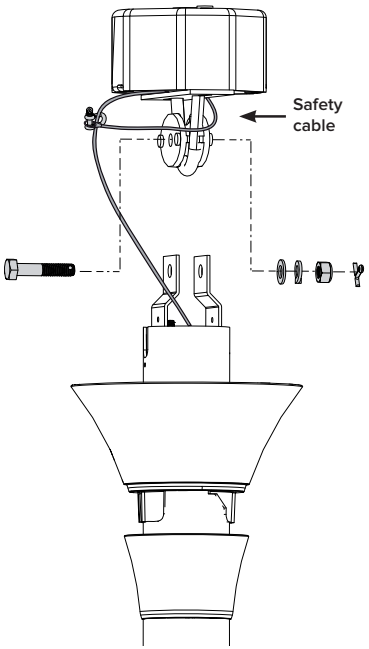

Step 6. Securing the safety cable

Loop the safety cable around the mounting bracket, and then secure it with the safety cable shackle.

Special Note: *If you are installing the fan in* ***Canada****, the safety cable must be secured to an existing part of the building structure instead of the outlet box. Examples of acceptable building structures include a wooden beam or a metal mounting brace secured between two beams. In some cases it may be necessary to install additional structural material to provide attachment points. If you have concerns about installing the safety cable, consult a structural engineer.*

Proceed to *Step 7. Wiring the fan* on page 10.

FAN MOUNTING (CONCRETE CEILING)

The concrete mounting method is not available in North America.

Step 4. Preparing the ceiling hook

Seat the rubber bushing inside the eye of the ceiling fan hook as shown. If there is not a ceiling hook at the fan site, the hanger plate accessory should be installed. See the following page for details on installing the hanger plate accessory.

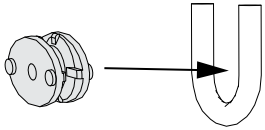

Make sure the hook is cast into the concrete ceiling before seating the rubber bushing.

Step 5. Hanging the fan

Raise the fan to ceiling hook, and then attach it by securing the extension tube bracket to the ceiling hook with the mounting hardware as shown on the right.

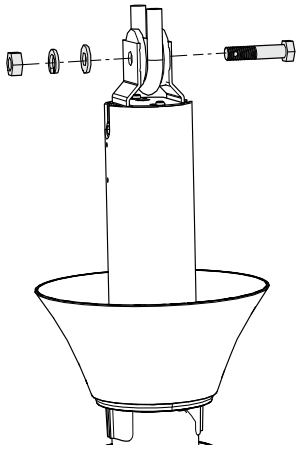

Be careful not to drop any hardware in the wiring cover during installation!

Step 6. Securing the safety cable

Loop the safety cable around the ceiling hook, and then secure it with the safety cable shackle.

Proceed to *Step 7. Wiring the fan* on page 10.

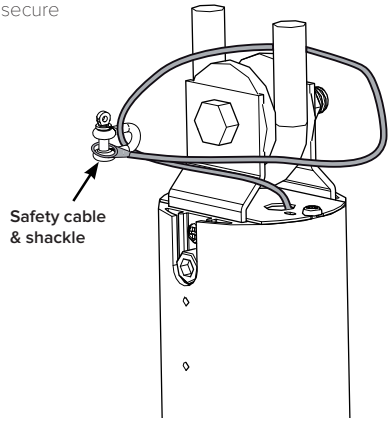

©2013 DELTA T CORP. ALL RIGHTS RESERVED.

Optional Hanger Plate

If mounting the fan to a concrete ceiling and a ceiling hook is not located at the fan site, a hanger plate with a safety cable hook should be installed. *The concrete mounting method is not available in North America.*

The safety cable must be installed with an anchor hook if mounting the fan with the hanger plate accessory.

Step 1. Installing anchor bolts

Drill three Ø12 mm to 12.5 mm holes in the pattern shown below. The hole depth should not exceed 35 mm to 40 mm.

Remove any dust from the holes. Insert the anchor bolts into the holes. Strike the heads of the anchor bolts with a hammer, ensuring the bolt sleeves are flush with the ceiling surface.

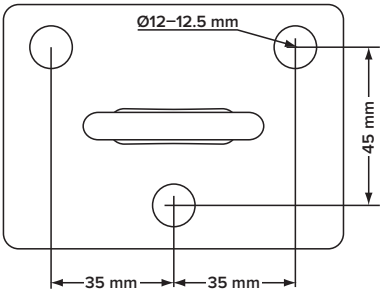

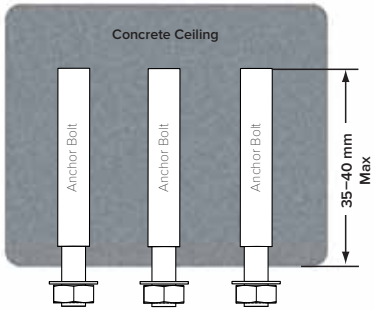

Step 2. Securing the hanger plate

Position the hanger plate on the anchor bolts. Ensure all anchor bolts are fully tightened to expand and lock the anchors.

Step 3. Installing the safety anchor hook

Drill a 8–8.5 mm hole adjacent to the ceiling plate. The hole depth should not exceed 35–40 mm. Remove any dust from the hole, and then insert the anchor hook and fully tighten.

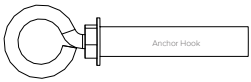

Step 4. Hanging the fan

Raise the fan to ceiling hook, and then loosely attach it by securing the extension tube bracket to the ceiling hook with the mounting hardware as shown on the previous page.

Be careful not to drop any hardware in the wiring cover during installation!

Step 5. Securing the safety cable

Loop the safety cable around the ceiling hook and through the anchor hook. Secure it with the locking pin.

Proceed to *Step 7. Wiring the fan* on the following page.

CAUTION: Disconnect power to the fan location before wiring the fan!

Step 7. Wiring the fan

With the fan hanging from the safety cable, connect the fan wires to the EMI filter (if used) and the ceiling wires by twisting the ends together and securing them with wire nuts or a terminal strip. Refer to the charts and wiring diagrams on the following pages to determine the wire connections. Test the connection by lightly tugging on the wires or wire nuts. *Install the fan on a switched circuit so that you can turn off the fan using a wall switch in addition to using the remote control.*

tip! *For extra space when wiring the fan, carefully remove the mounting hardware and allow the fan to hang from the safety cable. This also ensures there is enough slack in the wires.*

Step 8. Installing the wiring cover

Slide the wiring cover into position, allowing about a 1/8" (3 mm) gap to the ceiling. Rotate the wiring cover so that the mounting slots align with the screw holes. Secure the wiring cover screws on both sides of the extension tube to hold the cover in position. Make sure that there are no wires visible.

Slide the wiring cover trim up the extension tube, aligning the tabs on the inside of the ring with the slots on the bottom of the wiring cover. Twist clockwise to snap the wiring cover trim into position as shown.

tip! *If there is not enough clearance between the wiring cover and ceiling, the screw can be moved to the lower hole on the extension tube.*

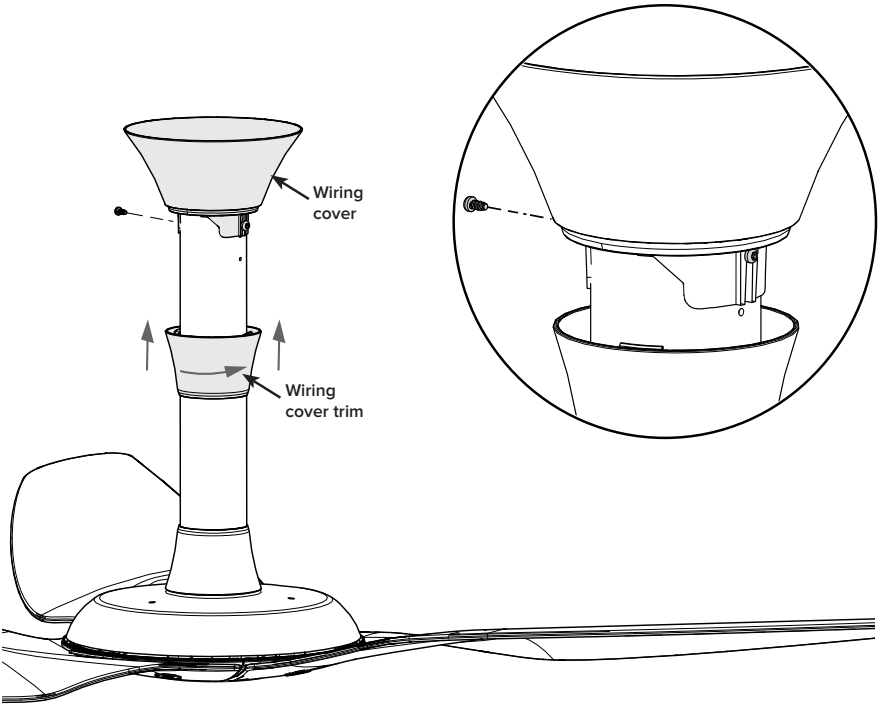

©2013 DELTA T CORP. ALL RIGHTS RESERVED.

Wiring diagram (without EMI filter)

Ensure power is disconnected before installing the fan! If the EMI filter is included with your fan, follow the wiring diagram on the following page.

Do not use the fan with a dimmer switch.

WARNING: Do not connect the fan to a damaged power source! Do not attempt to resolve electrical failures on your own. Consult a qualified electrician if uncertain of the electrical installation of this fan.

Wire color chart

50/60 Hz Compatible Fan Power Supply Wire Color	AC Line (L1) Brown	AC Line/Neutral (L2/N) Blue	Earth/PE (connected to fan chassis) Green with Yellow Tracer
North America 100–120V System	Black	White	Green or Bare Copper
North America 208–240V System	Black, Red, or Blue	Red, Blue, or Black	Green or Bare Copper
European Union (EU), United Kingdom 220–240V System	Brown, Black, or Grey	Blue	Green with Yellow Tracer
Australia* 240V System	Brown or Red	Black or Light Blue	Green with Yellow Tracer

**Special Note: If installing the fan in Australia, a licensed electrician must perform the electrical installation.*

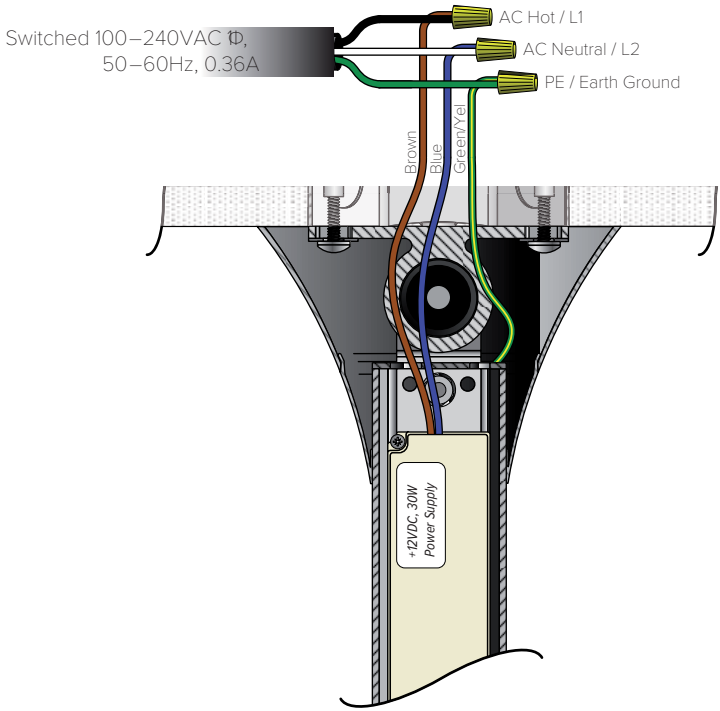

Wiring diagram (with EMI filter)

Ensure power is disconnected before installing the fan! If the EMI filter is included with your fan (country dependent), install it with your fan.

⚠ **Do not use the fan with a dimmer switch.**

WARNING: Do not connect the fan to a damaged power source! Do not attempt to resolve electrical failures on your own. Consult a qualified electrician if uncertain of the electrical installation of this fan.

Wire color chart

50/60 Hz Compatible Fan Power Supply Wire Color	AC Line (L1) Brown	AC Line/Neutral (L2/N) Blue	Earth/PE (connected to fan chassis) Green with Yellow Tracer
North America 100–120V System	Black	White	Green or Bare Copper
North America 208–240V System	Black, Red, or Blue	Red, Blue, or Black	Green or Bare Copper
European Union (EU), United Kingdom 220–240V System	Brown, Black, or Grey	Blue	Green with Yellow Tracer
Australia* 240V System	Brown or Red	Black or Light Blue	Green with Yellow Tracer

**Special Note: If installing the fan in Australia, a licensed electrician must perform the electrical installation.*

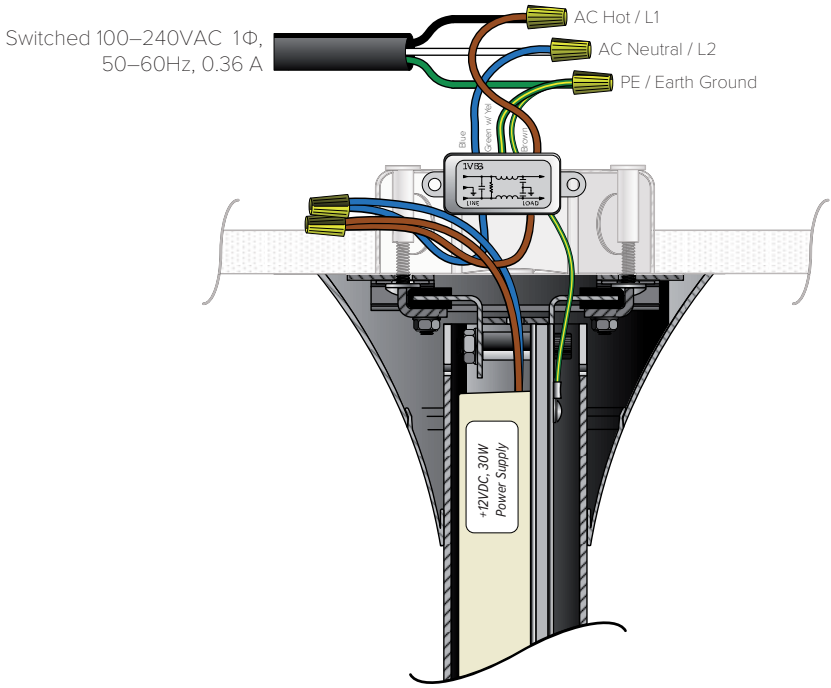

©2013 DELTA T CORP. ALL RIGHTS RESERVED.

Wiring diagram (with terminal strip)

Ensure power is disconnected before installing the fan!

Do not use the fan with a dimmer switch.

WARNING: Do not connect the fan to a damaged power source! Do not attempt to resolve electrical failures on your own. Consult a qualified electrician if uncertain of the electrical installation of this fan.

Wire color chart

50/60 Hz Compatible Fan Power Supply Wire Color	AC Line (L1) Brown	AC Line/Neutral (L2/N) Blue	Earth/PE (connected to fan chassis) Green with Yellow Tracer
Southeast Asia 220–240V System	Brown, Black, or Grey	Blue	Green with Yellow Tracer

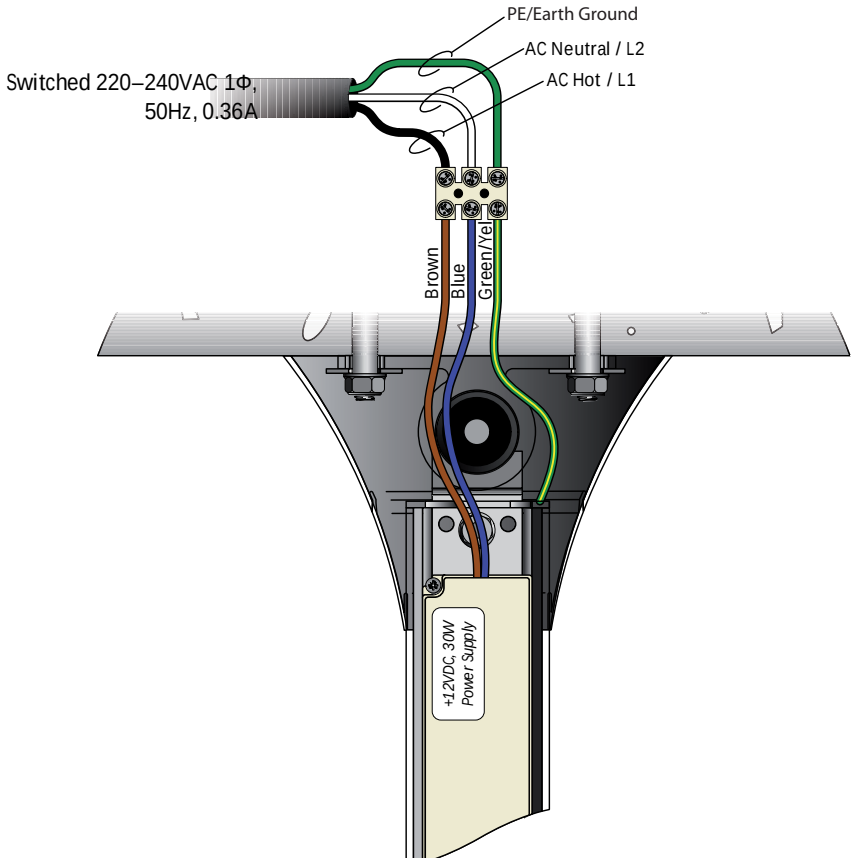

Operation

Before using the Haiku remote control, remove the plastic tab in the battery tray.

tip! *The fan mode indicators are located on the underside of the fan hub when viewed from the floor.*

Remote Front

Powering the fan

To turn the fan on or off, press the On/Off button on the fan remote. This button can also be used to reset the fan's speed. *The remote must be pointing toward the fan mode indicators to function properly.*

The fan will automatically restart at the last operating speed upon connection to the power source!

Replacing the remote control battery

The Haiku remote control operates on a CR 2025 3V lithium battery. **To replace the battery,** on the bottom of the remote, push the small tab to the right while sliding the battery tray outward. Replace the battery, and then close the battery tray. Recycle or dispose of the old battery properly.

Changing fan speed

Fan speed is increased or decreased by pressing the Up or Down Speed button on the remote. Seven fan speeds are available to accommodate your comfort level.

To change the fan speed, press a Speed button. The Up Speed button increases fan speed; the Down Speed button decreases fan speed. Press and hold a Speed button to step through the speeds automatically. The fan mode indicators will illuminate and a short beep will be heard until speed 7 (high) or 0 (off) is reached.

Remote Back

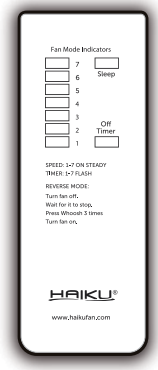

Sleep mode

Sleep mode reduces the fan speed by one increment every hour until the lowest speed is reached. When the programmed time period ends, the fan automatically turns off. *Sleep mode is only active when Timer mode is used.*

To activate Sleep mode, set the fan speed and Timer mode, and then press the Sleep button. The Sleep indicator will illuminate. **To exit Sleep mode,** press the Sleep, Clear, or On/Off button.

Timer mode

In Timer mode, the fan runs at a set speed until the programmed time period ends. Note: Timer mode is disabled if the fan speed is 0 (off) or if the fan is not running.

To set Timer mode, press the Timer button 1–7 times (once for each hour) to program the end time. During adjustment, the fan mode indicators will flash, and then the Timer setting is displayed on the speed indicator bar. **To exit Timer mode,** press the Clear button.

Whoosh mode

Whoosh mode simulates natural, relaxing breezes by automatically varying the fan speed in a quasi-sinusoidal pattern.

To activate Whoosh mode, set the desired maximum fan speed, and then press the Whoosh button. The top Speed indicator will flash to indicate that Whoosh mode is active. **To exit Whoosh mode,** press the Whoosh, Speed, or On/Off button once.

©2013 DELTA T CORP. ALL RIGHTS RESERVED.

Operating the light

The Haiku light accessory operates independently from the fan. Brightness is increased or decreased by pressing the Up or Down Light button on the remote.

To turn the light on or off, press the Light On/Off button on the remote. The Up Light button increases brightness; the Down Light button decreases brightness. Press and hold the Up or Down Light button to quickly increase or decrease the brightness until the desired level of illumination is reached.

Reversing the direction of rotation

Haiku reduces heating costs in the winter by pushing warm air at the ceiling level down to floor level. Because of the aerodynamic design of Haiku's airfoils, this is done most efficiently by operating the fan in the forward direction (counterclockwise when viewed from the floor) with the speed at the slowest setting so that you do not feel a draft from the fan. If, at the slowest speed setting, a draft is still felt, the fan can be operated in the reverse direction to eliminate the draft.

To reverse the direction of rotation, press the On/Off button to turn off the fan. When the fan is at a complete stop, press the Whoosh button on the remote control three (3) times, and then press the On/Off button. Repeat to return the fan to forward operation. Note: The fan only operates up to speed 4 in reverse.

Fan mode indicators

Each operating mode is indicated by a pattern on the fan mode indicator display, which is located on the bottom of the fan and is visible from the floor. The display includes a LED (light emitting diode) bar graph to indicate fan speed and Whoosh mode, and two separate LEDs to indicate Timer mode and Sleep mode.

All indicators automatically turn off approximately one minute after the last button is pressed to minimize power consumption and prevent nuisance lighting at night. The indicators will display the current speed setting by default.

tip! *The indicators can be reactivated by pressing any button on the remote control except the On/Off button. This will not change the current operating setting.*

Speed indicators

When the fan is running, the Speed indicator LEDs show the current fan speed (1–7). Whoosh mode is indicated when the highest set speed indicator is flashing. When all indicators are simultaneously flashing, Timer mode is active.

You can toggle the display from Speed mode to Timer mode by pressing the Timer button once. To toggle from the Timer mode to Speed mode, simultaneously press the Speed button and Whoosh button once. See the previous page for instructions on changing fan speed.

Sleep mode indicator

The Sleep LED indicates that Sleep mode is active. A flashing Sleep LED indicates that the Timer mode is being adjusted. See the previous page for instructions on using Sleep mode.

Timer mode indicator

The Timer LED indicates that Timer mode is active. A flashing Timer LED indicates that the Timer mode is being adjusted. See the previous page for instructions on using Timer mode.

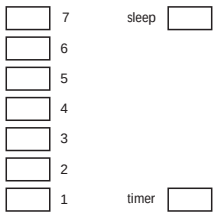

Petitioner Minka – EX1021
Page 19 of 23

Troubleshooting

WARNING: To avoid electric shock, remove power from the fan before servicing!
WARNING: Risk of fire, electric shock, or injury to persons during cleaning and servicing!
WARNING: Do not operate fan with missing or damaged components!

General troubleshooting

Some issues can be resolved before requesting service. Review the below troubleshooting tips before contacting Haiku Customer Service for support.

Symptom	Possible Solution(s)
The fan will not start.	• Verify that supply power is adequate. Check your circuit breaker or fuse and wall switch for functionality. • Make sure that all wires are securely connected. If the fan is mounted to an outlet box, make sure the outlet box is grounded and that the fan is wired to it properly.
The fan is noisy during operation.	• Check all mounting and fan hardware. If loose, tighten.
The fan wobbles.	• For Haiku Bamboo fans, remove the airfoil to ensure the colored sticker matches the sticker on the fan hub. For Haiku fans, remove the bottom cover and ensure the colored sticker on the bottom of the airfoil matches the sticker on the fan tab. If necessary, move the airfoils to the matching hub attachment points. • Make sure that all mounting hardware is secure and tight. • Make sure that all the airfoils are aligned properly and securely fastened to the fan hub. • If an airfoil is damaged, contact Haiku Customer Service. Note: Airfoils must be replaced as a set. Do not replace individual airfoils. • If you installed multiple fans, ensure the serial numbers on the airfoils match the serial number on the fan hub.
The fan does not produce airflow.	• Make sure the airfoils are aligned properly. • Make sure the fan is rotating counterclockwise when viewed from the floor.
The fan jerks upon startup.	• This is normal and may happen occasionally upon startup. An initial slight jerking forward and backward does not affect fan operation.

©2013 DELTA T CORP. ALL RIGHTS RESERVED.

Maintenance

WARNING: Disconnect the fan from power before servicing!

Annual maintenance

Please take a few moments each year to perform the following preventative maintenance procedures on your fan to ensure its safe and efficient operation. If you have any questions, require assistance with your fan, or need replacement parts, contact Haiku Customer Service at www.haikufan.com/service.

Note: Actual fan setup may differ from the illustration below.

- Check that the safety cable is properly installed by sliding the wiring cover and trim down the extension tube, and then examining the safety cable and hardware.
- Make sure the mounting hardware is securely fastened.
- Make sure the hardware securing the airfoils to the fan hub is securely fastened.
- Dust the airfoils regularly. If the fan becomes dirty, clean it with a damp cloth and ordinary soap and water. Do not use solvents, gasoline, or any other chemical cleaners! These may cause surface distortion and damage to the fan.
- Make sure the wire nuts are secure and the ground wire is securely connected, or make sure the wires are secured in the terminal strip and the Earth wire is securely connected.
- If the fan is mounted to a concrete ceiling and the hanger plate accessory was installed, make sure the anchor bolts, anchor hook, and safety cable are secured.

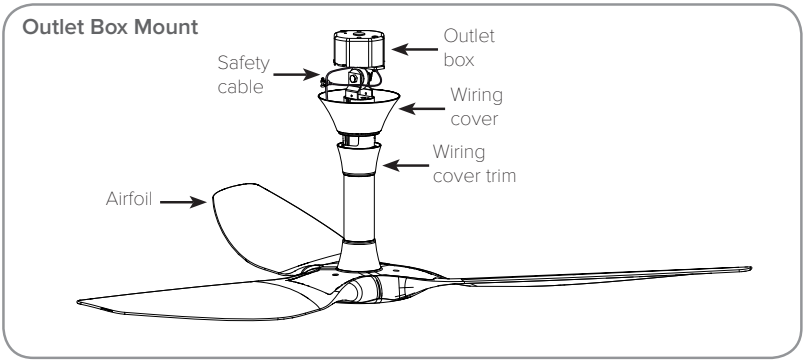

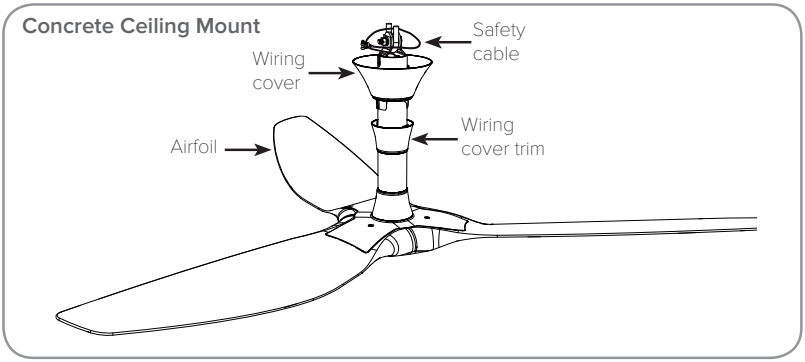

BIG ASS FANS

No Equal

www.haikufan.com

©2013 Delta T Corporation

002491