US007581833B2

(12) **United States Patent**
Howell et al.

(10) **Patent No.: US 7,581,833 B2**
(45) **Date of Patent: Sep. 1, 2009**

(54) **EYEWEAR SUPPORTING AFTER-MARKET ELECTRICAL COMPONENTS**

(75) Inventors: **Thomas A. Howell**, Palo Alto, CA (US); **David Chao**, Saratoga, CA (US); **C. Douglass Thomas**, Campbell, CA (US); **Peter P. Tong**, Mountain View, CA (US)

(73) Assignee: **IpVenture, Inc.**, Los Altos, CA (US)

(*) Notice: Subject to any disclaimer, the term of this patent is extended or adjusted under 35 U.S.C. 154(b) by 82 days.

(21) Appl. No.: **11/580,222**

(22) Filed: **Oct. 11, 2006**

(65) **Prior Publication Data**

US 2007/0046887 A1 Mar. 1, 2007

Related U.S. Application Data

(60) Provisional application No. 60/725,999, filed on Oct. 11, 2005, provisional application No. 60/725,896, filed on Oct. 11, 2005, provisional application No. 60/787,850, filed on Apr. 1, 2006, provisional application No. 60/846,150, filed on Sep. 20, 2006.

(51) **Int. Cl.**
G02C 5/14 (2006.01)

(52) **U.S. Cl.** **351/121**; 351/158; 381/327

(58) **Field of Classification Search** ..... 351/41, 351/111, 121, 158; 381/309, 310, 327, 330, 381/381, FOR. 135; 455/569.1, 575.1, 575.6
See application file for complete search history.

(56) **References Cited**

U.S. PATENT DOCUMENTS

320,558	A	6/1885	Hull
669,949	A	3/1901	Underwood
1,255,265	A	2/1918	Zachara
1,917,745	A	7/1933	Weiss
2,638,532	A	5/1953	Brady
2,794,085	A	5/1957	DeAngelis
2,830,132	A	4/1958	Borg
2,904,670	A	9/1959	Calmes
3,060,308	A	10/1962	Fortuna
3,597,054	A	8/1971	Winter
3,710,115	A	1/1973	Jubb
4,165,487	A	8/1979	Corderman
4,254,451	A	3/1981	Cochran, Jr.
4,283,127	A	8/1981	Rosenwinkel et al.

(Continued)

FOREIGN PATENT DOCUMENTS

CN	88203065	11/1988

(Continued)

OTHER PUBLICATIONS

"±1.5g Dual Axis Micromachined Accelerometer", Freescale Semiconductor, Inc., Motorola Semiconductor Technical Data, MMA6260Q, 2004, pp. 1-7.

(Continued)

Primary Examiner—Huy K Mai

(57) **ABSTRACT**

Techniques for providing eyewear with electrical components are disclosed. The electrical components can provide electrical technology to eyewear without having to substantially compromise aesthetic design principles of the eyewear. The electrical components can be partially or completely internal to eyewear. The electrical components can also be attached to the eyewear as an after-market enhancement. The electrical components can operate independently or together with other electrical components provided elsewhere.

19 Claims, 20 Drawing Sheets

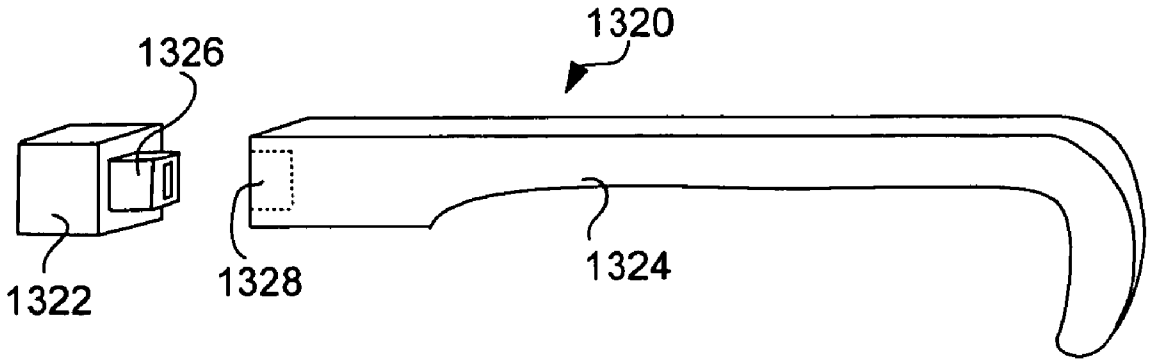

Luxottica Ex. 1004
IPR Petition USP 8,708,483

U.S. PATENT DOCUMENTS

4,322,585	A		3/1982	Liautaud
4,348,664	A		9/1982	Boschetti et al.
4,389,217	A		6/1983	Baughman et al.
4,526,473	A		7/1985	Zahn, III
4,608,492	A		8/1986	Burnham
4,683,587	A		7/1987	Silverman
4,751,691	A		6/1988	Perera
4,757,714	A		7/1988	Purdy et al.
4,773,095	A		9/1988	Zwicker et al.
4,806,011	A		2/1989	Bettinger
4,822,160	A		4/1989	Tsai
4,822,161	A		4/1989	Jimmy
4,942,629	A		7/1990	Stadlmann
4,962,469	A		10/1990	Ono et al.
4,985,632	A		1/1991	Bianco et al.
5,008,548	A		4/1991	Gat
5,020,150	A		5/1991	Shannon
5,036,311	A		7/1991	Moran et al.
5,050,150	A		9/1991	Ikeda
5,093,576	A		3/1992	Edmond et al.
5,148,023	A		9/1992	Hayashi et al.
5,151,600	A		9/1992	Black
5,161,250	A		11/1992	Ianna et al.
5,172,256	A		12/1992	Sethofer et al.
5,306,917	A		4/1994	Black et al.
5,353,378	A		10/1994	Hoffman et al.
5,359,370	A		10/1994	Mugnler
5,367,345	A		11/1994	da Silva
5,379,464	A		1/1995	Schleger et al.
5,382,986	A		1/1995	Black et al.
5,394,005	A		2/1995	Brown et al.
5,452,480	A		9/1995	Ryden
5,455,640	A		10/1995	Gertsikov
5,457,751	A		10/1995	Such
5,500,532	A		3/1996	Kozicki
D369,167	S		4/1996	Hanson et al.
5,513,384	A		4/1996	Brennan et al.
5,533,130	A		7/1996	Staton
5,581,090	A		12/1996	Goudjil
5,585,871	A		12/1996	Linden
5,589,398	A		12/1996	Krause et al.
5,590,417	A		12/1996	Rydbeck
5,608,808	A		3/1997	da Silva
5,634,201	A		5/1997	Mooring
5,686,727	A		11/1997	Reenstra et al.
5,715,323	A		2/1998	Walker
5,737,436	A		4/1998	Boyden et al.
5,900,720	A		5/1999	Kallman et al.
5,941,837	A		8/1999	Amano et al.
5,946,071	A		8/1999	Feldman
5,966,746	A		10/1999	Reedy et al.
5,980,037	A		11/1999	Conway
5,988,812	A		11/1999	Wingate
5,992,996	A		11/1999	Sawyer
5,995,592	A		11/1999	Shirai et al.
6,010,216	A		1/2000	Jesiek
6,013,919	A		1/2000	Schneider et al.
6,028,627	A		2/2000	Helmsderfer
6,046,455	A		4/2000	Ribl et al.
6,060,321	A		5/2000	Hovorka
6,061,580	A		5/2000	Altschul et al.
6,091,546	A	*	7/2000	Spitzer 359/618
6,091,832	A		7/2000	Shurman et al.
6,115,177	A		9/2000	Vossler
6,154,552	A		11/2000	Koroljow et al.
6,176,576	B1		1/2001	Green et al.
6,231,181	B1		5/2001	Swab
6,236,969	B1		5/2001	Ruppert et al.
6,243,578	B1		6/2001	Koike
6,259,367	B1		7/2001	Klein
6,292,213	B1		9/2001	Jones
6,301,367	B1		10/2001	Boyden et al.
6,307,526	B1		10/2001	Mann
6,343,858	B1		2/2002	Zelman
6,349,001	B1		2/2002	Spitzer
6,349,422	B1		2/2002	Schleger et al.
6,409,338	B1		6/2002	Jewell
6,426,719	B1		7/2002	Nagareda et al.
6,431,705	B1		8/2002	Linden
6,478,736	B1		11/2002	Mault
6,506,142	B2		1/2003	Itoh et al.
6,513,532	B2		2/2003	Mault et al.
6,517,203	B1		2/2003	Blum et al.
6,539,336	B1		3/2003	Vock et al.
6,542,081	B2	*	4/2003	Torch 340/575
6,554,763	B1		4/2003	Amano et al.
6,619,799	B1		9/2003	Blum et al.
6,629,076	B1		9/2003	Haken
6,729,726	B2		5/2004	Miller et al.
6,736,759	B1		5/2004	Stubbs et al.
6,764,194	B1		7/2004	Cooper
6,792,401	B1		9/2004	Nigro et al.
6,929,365	B2		8/2005	Swab et al.
7,013,009	B2		3/2006	Warren
7,031,667	B2		4/2006	Horiguchi
7,059,717	B2		6/2006	Bloch
7,073,905	B2		7/2006	Da Pra'
7,192,136	B2		3/2007	Howell et al.
7,255,437	B2		8/2007	Howell et al.
7,274,292	B2		9/2007	Velhal et al.
7,312,699	B2		12/2007	Chomenky
7,331,666	B2		2/2008	Swab et al.
7,378,238	B2		5/2008	Hilbrig et al.
2001/0005230	A1		6/2001	Ishikawa
2002/0081982	A1		6/2002	Schwartz et al.
2002/0084990	A1		7/2002	Peterson, III
2002/0089639	A1		7/2002	Starner et al.
2002/0090103	A1		7/2002	Calisto, Jr.
2002/0098877	A1		7/2002	Glezerman
2002/0109600	A1		8/2002	Mault et al.
2002/0140899	A1		10/2002	Blum et al.
2002/0197961	A1		12/2002	Warren
2003/0018274	A1		1/2003	Takahashi et al.
2003/0022690	A1		1/2003	Beyda et al.
2003/0032449	A1		2/2003	Giobbi
2003/0062046	A1		4/2003	Weismann
2003/0065257	A1		4/2003	Mault et al.
2003/0067585	A1		4/2003	Miller et al.
2003/0068057	A1		4/2003	Miller et al.
2003/0226978	A1		12/2003	Ribi et al.
2004/0000733	A1		1/2004	Swab et al.
2004/0029582	A1	*	2/2004	Swab et al. 455/426.1
2004/0063378	A1		4/2004	Nelson
2004/0096078	A1		5/2004	Lin
2004/0100384	A1		5/2004	Chen et al.
2004/0150986	A1		8/2004	Chang
2004/0156012	A1		8/2004	Jannard et al.
2004/0157649	A1		8/2004	Jannard et al.
2004/0160571	A1		8/2004	Jannard
2004/0160572	A1		8/2004	Jannard
2005/0067580	A1		3/2005	Fontaine
2005/0213026	A1		9/2005	Da Pra'
2005/0230596	A1		10/2005	Howell et al.
2005/0248717	A1		11/2005	Howell et al.
2005/0248719	A1		11/2005	Howell et al.
2005/0264752	A1		12/2005	Howell et al.
2006/0001827	A1		1/2006	Howell et al.
2006/0003803	A1		1/2006	Thomas et al.
2006/0023158	A1		2/2006	Howell et al.
2007/0030442	A1		2/2007	Howell et al.
2007/0046887	A1		3/2007	Howell et al.
2007/0109491	A1		5/2007	Howell et al.
2007/0186330	A1		8/2007	Howell et al.
2007/0208531	A1		9/2007	Darley et al.

2008/0068559 A1 3/2008 Howell et al.

FOREIGN PATENT DOCUMENTS

CN	89214222.7		3/1990
CN	90208199.3		11/1990
EP	1134491	A2	9/2001
FR	2530039	A1	1/1984
GB	1467982		3/1977
JP	58-113912		7/1983
JP	58-113914		7/1983
JP	02-181722		7/1990
JP	09-017204		1/1997
JP	10-161072		6/1998
JP	2000-039595		2/2000
JP	2002 341059	A	11/2002
TW	484711		6/2001
WO	WO 97/12205	A1	4/1997
WO	WO 99/50706		10/1999
WO	WO 02/06881	A2	1/2002
WO	WO 03/069394	A1	8/2003
WO	WO 03/100368	A1	12/2003
WO	WO 2004/012477	A2	2/2004
WO	WO 2004/025554	A1	3/2004

OTHER PUBLICATIONS

"APA Announces Shipment of the SunUV™ Personal UV Monitor", Press Release, Nov. 7, 2003, pp. 1-3.

"Camera Specs Take Candid Snaps", BBC News, Sep. 18, 2003, pp. 1-3.

"Cardo Wireless Attaching Clips and Wearing Headset", Cardo Systems, Inc., http://www.cardowireless.com/cllps.php, downloaded Nov. 27, 2004, pp. 1-3.

"Environmental Health Criteria 14: Ultraviolet Radiation", International Programme on Chemical Safety, World Health Organization Geneva, 1979 http://www.ichem.org., pp. 1-102.

"Eyetop", Product-Features, eyetop eyewear, eyetop belt worn, http://www.eyetop.net/products/eyetop/features.asp., downloaded Nov. 6, 2003, pp. 1-2.

"Exclusive Media Event Marks Debut of Oakley Thump: World's First Digital Audio Eyewear", Oakley Investor Relations, Press Release, Nov. 15, 2004, pp. 1-2.

"Heart Rate Monitors", http://www.healthgoods.com, downloaded Dec. 4, 2004.

"How is the UV Index Calculated", SunWise Program, U.S. Environmental Protection Agency, http://www.epa.gov/sunwise/uvcalc.html, downloaded Oct. 14, 2004, pp. 1-2.

"Industrial UV Measurements", APA Optics, Inc., http://www.apaoptics.com/uv/, downloaded Jul. 12, 2004, p. 1.

"Motorola and Oakley Introduce First Bluetooth Sunglasses-Cutting Edge RAZRWire Line Offers Consumers On-The-Go Connections", Motorola Mediacenter-Press Release, Feb. 14, 2005, pp. 1-2.

"Oakley Thump: Sunglasses Meet MP3 Player", with image, http://news.designtechnica.com/article4665.html, Jul. 13, 2004.

"Personal UV monitor," Optics.org, http://optics.org/articles/news/6/6/7/1 (downloaded Dec. 20, 2003), Jun. 9, 2000, pp. 1-2.

"SafeSun Personal Ultraviolet Light Meter", http://healthchecksystems.com/safesun.htm, downloaded Jul. 12, 2004, pp. 1-4.

"SafeSun Personal UV Meter", Introduction, Optix Tech Inc., http://www.safesun.com, downloaded Feb. 5, 2004, pp. 1-2.

SafeSun Personal UV Meter, features, Optix Tech Inc., http://www.safesun.com/features.html, downloaded May 1, 2004, pp. 1-2.

"Sharper Image—The FM Pedometer", e-Corporate Gifts.com, http://www.e-corporategifts.com/sr353.html, downloaded Jan. 22, 2005, pp. 1-2.

"Sun UV™ Personal UV Monitor", APA Optics, Inc., http://www.apaoptics.com/sunuv/uvfacts.html, downloaded Dec. 20, 2003, pp. 1-3.

"Ultraviolet Light and Sunglasses", Oberon's Frequently Asked Questions, http://www.oberoncompany.com/OBEnglish/FAQUV.html, downloaded Feb. 5, 2004, pp. 1-2.

"Ultraviolet Light Sensor", Barrett & Associates Engineering, http://www.barrettengineering.com/project_uvs.htm, downloaded Feb. 5, 2004, pp. 1-3.

"Ultraviolet Radiation (UVR)", Forum North, Ontario Ministry of Labour, http://www3.mb.sympatico.ca/-ericc/ULTRAVIOLET%20RADIATION.htm, downloaded Feb. 5, 2004. pp. 1-6.

"What Are Gripples?", Gripping Eyewear, Inc., http://www.grippingeyewear.com/whatare.html, downloaded Nov. 2, 2005.

"With Racing Heart", Skaloud et al, GPS World, Oct. 1, 2001, http://www.gpsworld,com/gpsworld/content/printContentPopup.isp?id=1805, pp. 1-5.

Abrisa Product Information: Cold Mirrors, Abrisa, date unknown, p. 1.

Abrisa Product Information: Commercial Hot Mirror, Abrisa, date unknown, p. 1.

Alps Spectable, Air Conduction Glass, Bone Conduction Glass, htt;://www.alps-inter.com/spec.htm, downloaded Dec. 10, 2003, pp. 1-2.

Altimeter and Compass Watches, http://store.yahoo.com/snowshack/altimeter-watches.html, downloaded May 3, 2004, pp. 1-2.

Bone Conduction Headgear HG16 Series, "Voiceducer," http://www.temco-j.co.jp/html/English/HG16.html, downloaded Dec. 10, 2003, pp. 1-3.

Carnoy, David, "The Ultimate MP3 Player for Athletes? Could be.", CNET Reviews, May 14, 2004, pp. 1-4.

Clifford, Michelle A., "Acccelerometers Jump into the Consumer Goods Market", Sensors Online, http://www.sensorsmag.com, Aug. 2004.

Cool Last Minute Gift Ideasl, UltimateFatBurner Reviews and Articles, http://www.ultimatefatburner.com/gift-ideas.html, downloaded May 10, 2005, pp. 1-3.

Comfees.com, Adjustable Sports Band Style No. 1243, http://shop.store.yahoo.com/comfees/adsporbansty.html, downloaded Apr. 18, 2003, pp. 1-2.

Dixen, Brian, "ear-catching", Supertesten, Mobil, date unknown, pp. 37-41.

Global Solar UV Index, A Practical Guide, World Health Organization, 2002, pp. 1-28.

Grobart, Sam, "Digit-Sizing Your Computer Data", News Article, Sep. 2004, p. 1.

Life Monitor V1.1, Rhusoft Technologies Inc., http://www.rhusoft.com/lifemonitor/, Mar. 1, 2003, pp. 1-6.

Manes, Stephen, "Xtreme Cam", Forbes Magazine, Sep. 5, 2005, p. 96.

Mio, PhysiCal, http://www.gophysical.com/, downloaded Jan. 27, 2004, 5 pages.

Monitoring Athletes Performance—2002 Winter Olympic News from KSL, Jan. 23, 2002, http://2002.ksl.com/news-3885l.php, pp. 1-3.

NIWA, "UV Index Information", http://www.niwa.crl.nz/services/uvozone/uvl-Info, downloaded Jul. 15, 2004, pp. 1-2.

Pärkkä, Juha, et al., "A Wireless Wellness Monitor for Personal Weight Management", VTT Information Technology, Tampere, Finland, date unknown, p. 1.

Pedometer, Model HJ-112, Omron Instruction Manual, Omron Healthcare, Inc., 2003, pp. 1-27.

PNY Announces Executive Attaché USB 2.0 Flash Drive and Pen Series, Press Release, PNY Technologies, Las Vegas, Jan. 8, 2004, pp. 1-2.

PNY Technologies, "Executive Attaché" http://www.pny.com/products/flash/execattache.asp downloaded Nov. 16, 2005.

Polar WM41 and 42 weight management monitor, http://www.simplysports/polar/weight_management/wm41-42.htm, downloaded Jan. 28, 2004, pp. 1-3.

Questions Answers, Pedometer.com, http:/www.pedometer.com, downloaded May 5, 2005.

RazrWire, Motorola, 2005, 1 page.

SafeSun Personal UV Meter, Scientific Data, Optix Tech Inc., http://www.safesun.com/scientific.html, downloaded May 1, 2003, pp. 1-3.

SafeSun Sensor, User's Manual, Optix Tech Inc., date unknown.

SafeSun, Personal UV Meter, "Technical Specifications", Optix Tech Inc., http://www.safesun.com/technical.html, downloaded Jul. 12, 2004, pp. 1-2.

SafeSun, Personal UV Meter, Experiments, Optix Tech Inc., http://www.safesun.com/experiments.html, downloaded Feb. 5, 2004, pp. 1-2.

Shades of Fun, Blinking Light Glasses, http://www.shadesoffun.com/Nov/Novpgs-14.html, downloaded Jul. 9, 2005, pp. 1-4.

SportLine Fitness Pedometer-Model 360, UltimateFatBurner Superstore, http://www.ultimatefatburner-store.com/ac_004.html, downloaded May 10, 2005, pp. 1-2.

Steele, Bonnie G. et al., "Bodies in motion: Monitoring daily activity and exercise with motion sensors in people with chronic pulmonary disease", VA Research & Development, Journal of Rehabilitation Research & Development, vol. 40, No. 5, Sep./Oct. 2003, Supplement 2, pp. 45-58.

Stevens, Kathy, "Should I Use a Pedometer When I Walk?", Healtheon/WebMD, Apr. 14, 2000.

Sundgot, Jørgen "2nd-gen Motorola Bluetooth headset", InfoSync World, Mar. 1, 2003, http://www.infosync.no/news/2002/n/2841.html, pp. 1-2.

SunSensors, Segan Industries, Inc., http://www.segan-ind.com/sunsensor.htm, downloaded Feb. 5, 2004, pp. 1-3.

SunUV™, Personal UV Monitor, APA Optics, Inc., http://www.apaoptics.com/sunuv/models.html, downloaded Dec. 20, 2003.

SunUV™, Personal UV Monitor User's Guide, APA Optics, Inc., 2003 pp. 1-52.

Talking Pedometer, Sportline, Inc., date unknown.

Top Silicon PIN Photodiode, PD93-21C, Technical Data Sheet, Everlight Electronics Co., Ltd., 2004, pp. 1-9.

UV Light Meter, UVA and UVB measurement, UV-340, Instruction Manual, Lutron, date unknown, pp. 1-5.

UV-Smart, UVA/B Monitor, Model EC-960-PW, Instruction Manual, Tanita Corporation of America, Inc., downloaded Nov. 16, 2001.

Vitaminder Personal Carb Counter with Convenient Key Chain, date unknown, pp. 1-4.

* cited by examiner

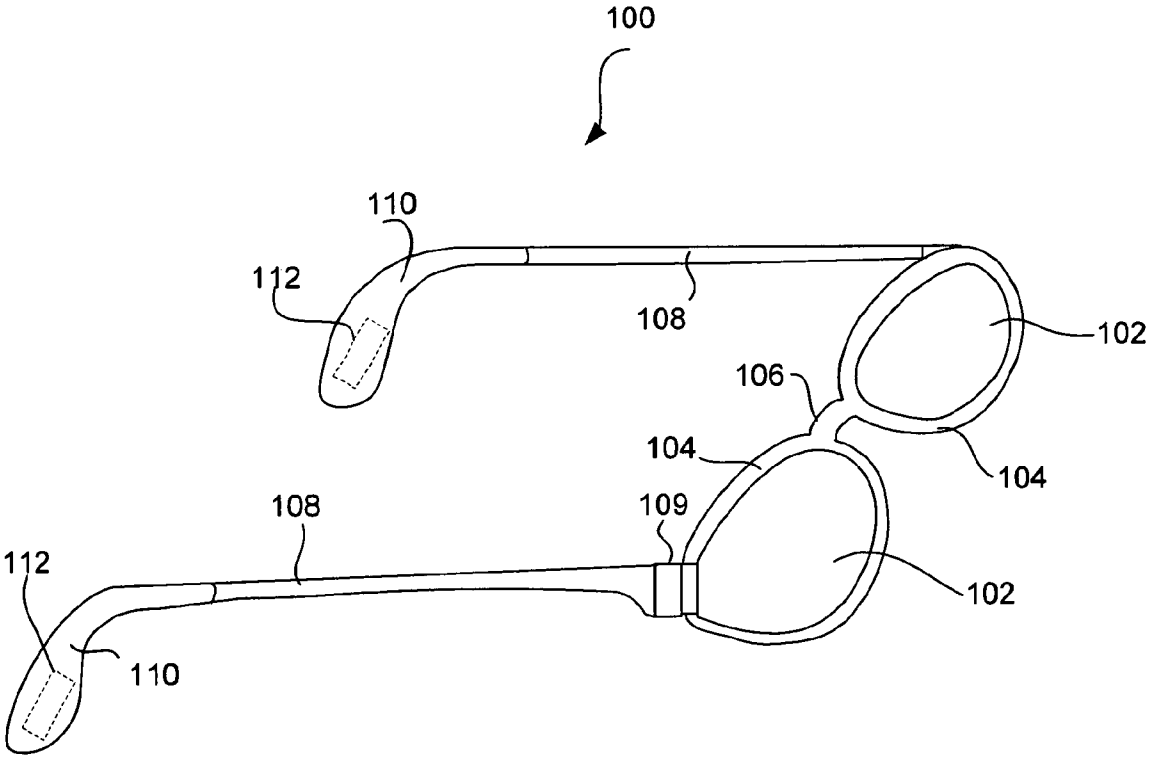

FIG. 1

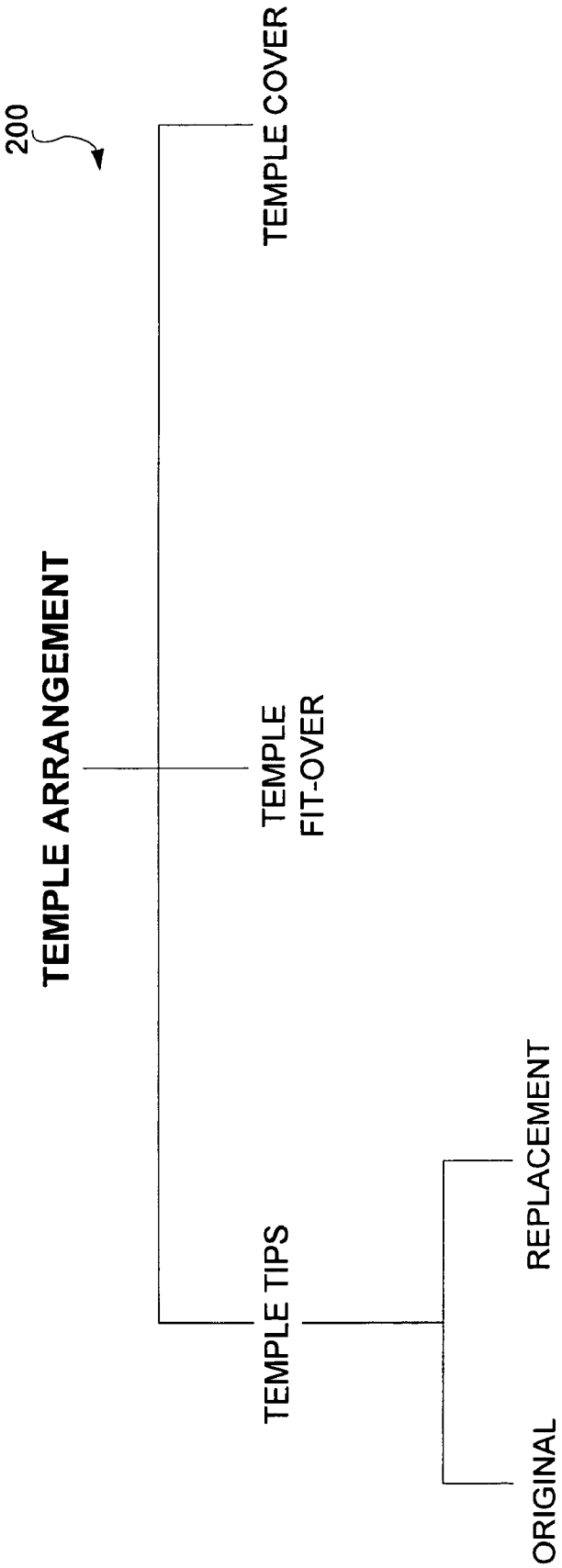
200
TEMPLE ARRANGEMENT
TEMPLE COVER
TEMPLE FIT-OVER
TEMPLE TIPS
ORIGINAL
REPLACEMENT

FIG. 2

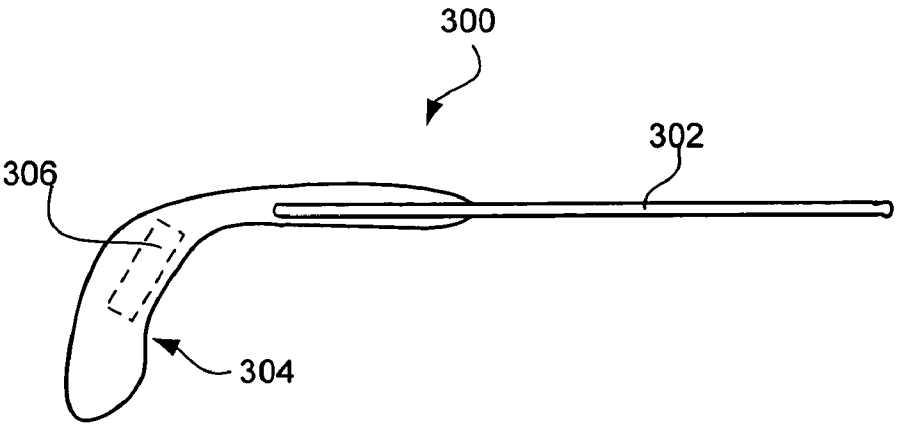

FIG. 3A

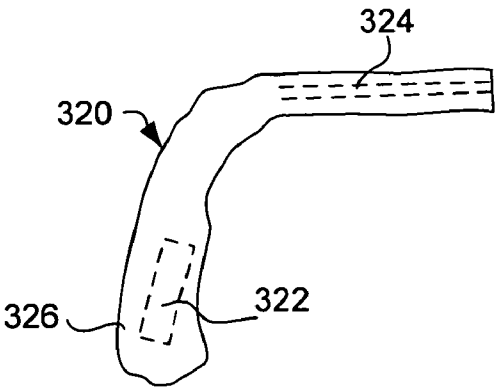

FIG. 3B

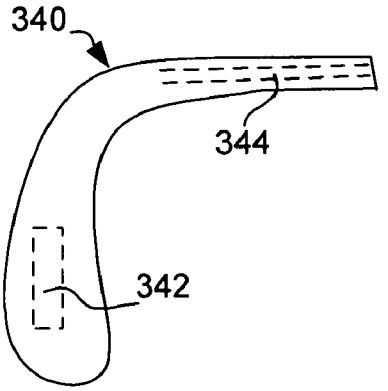

FIG. 3C

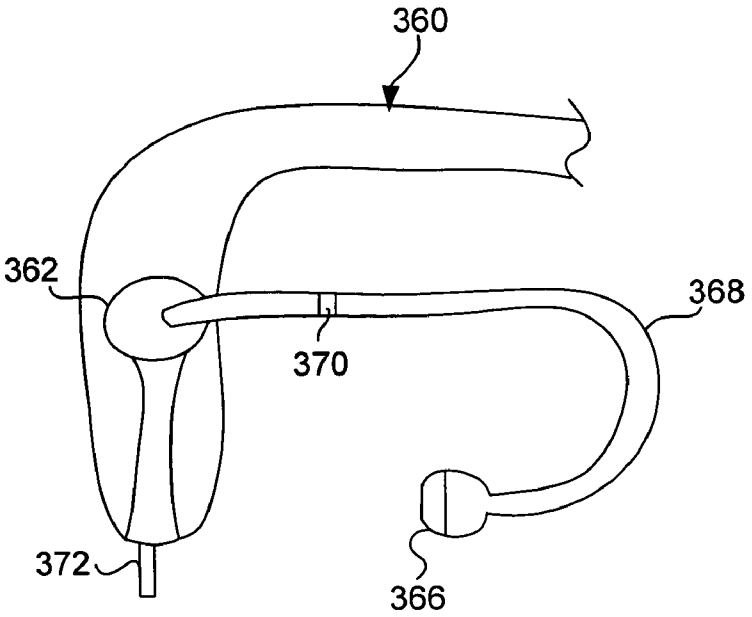

FIG. 3D

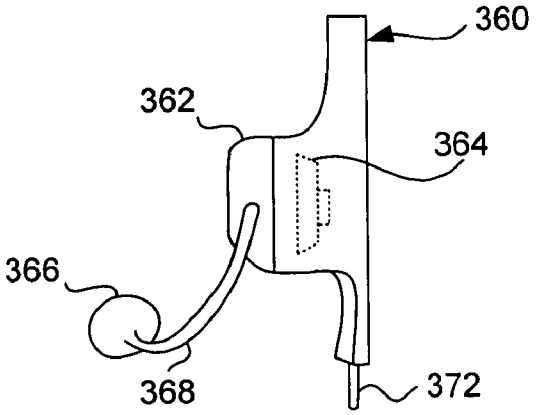

FIG. 3E

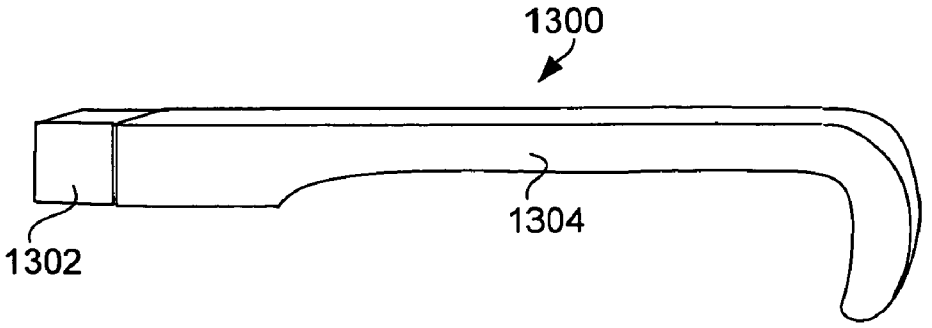

FIG. 3F

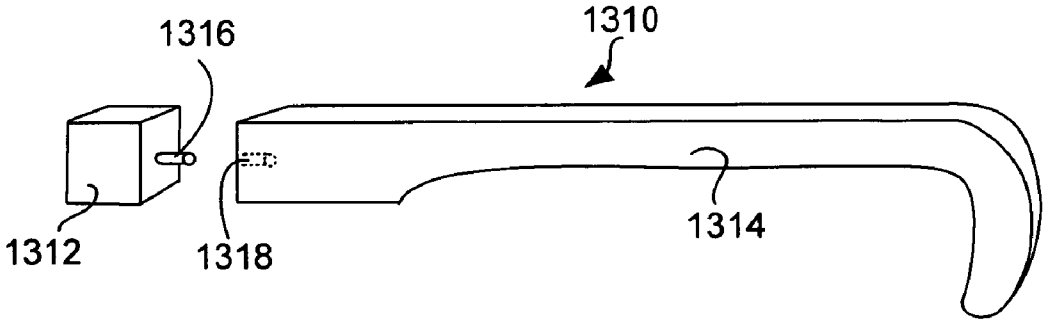

FIG. 3G

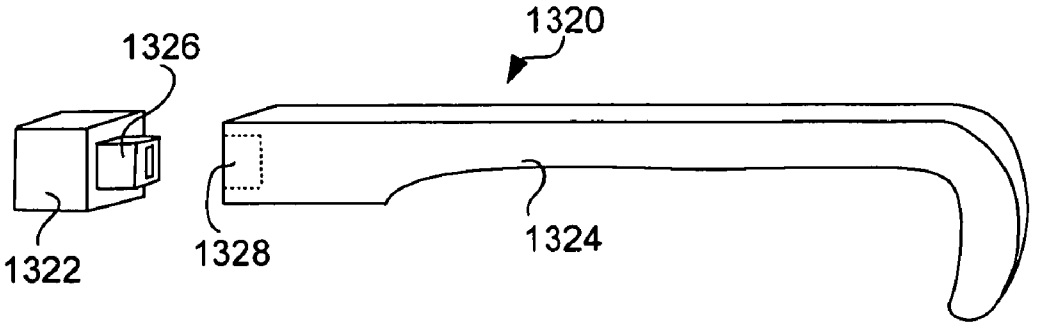

FIG. 3H

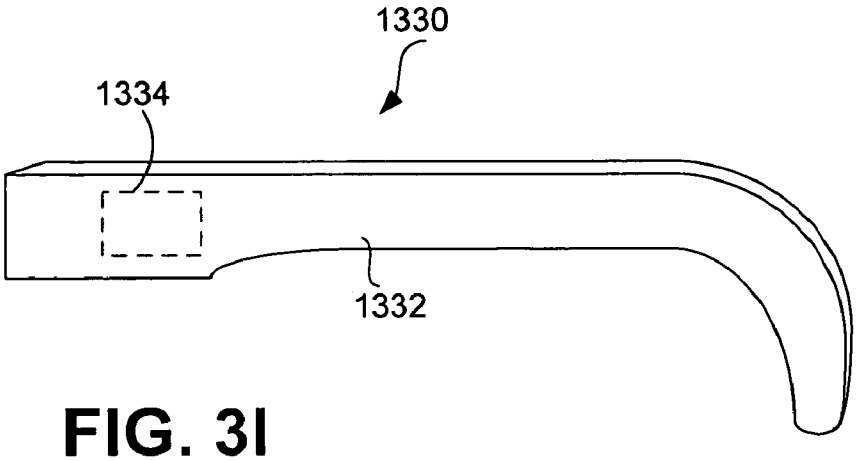

FIG. 3I

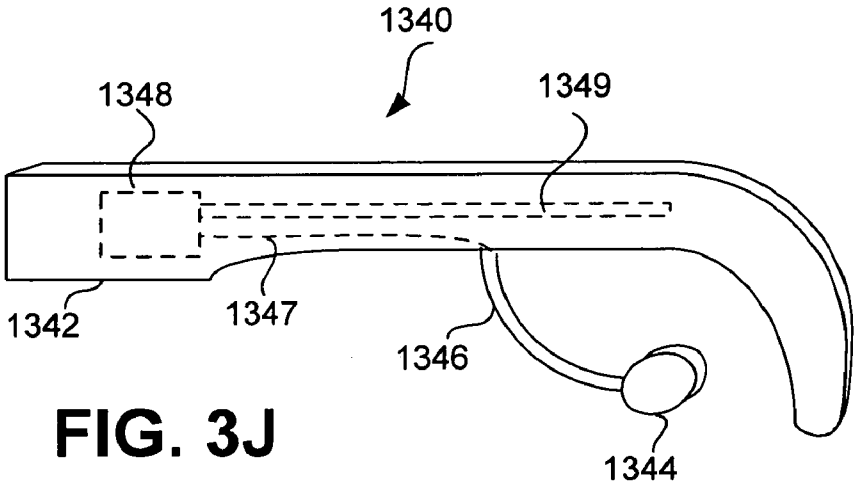

FIG. 3J

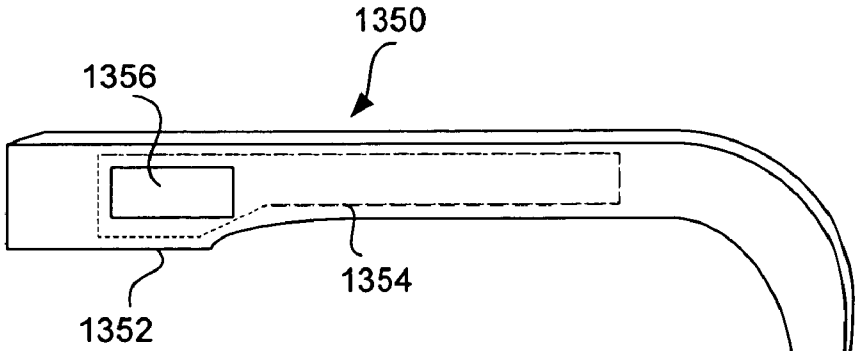

FIG. 3K

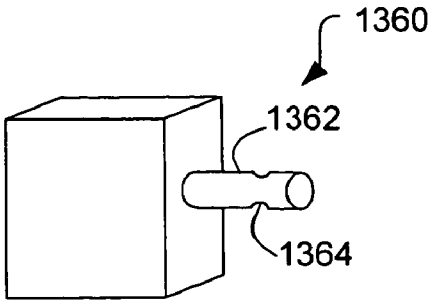

FIG. 3L

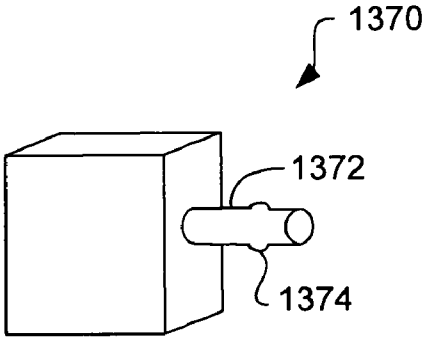

FIG. 3M

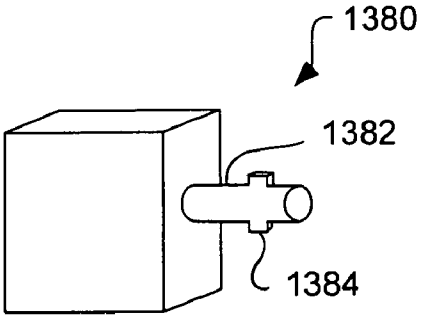

FIG. 3N

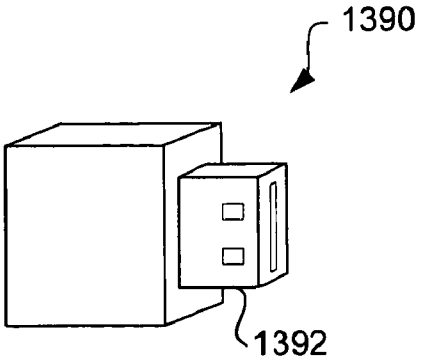

FIG. 3O

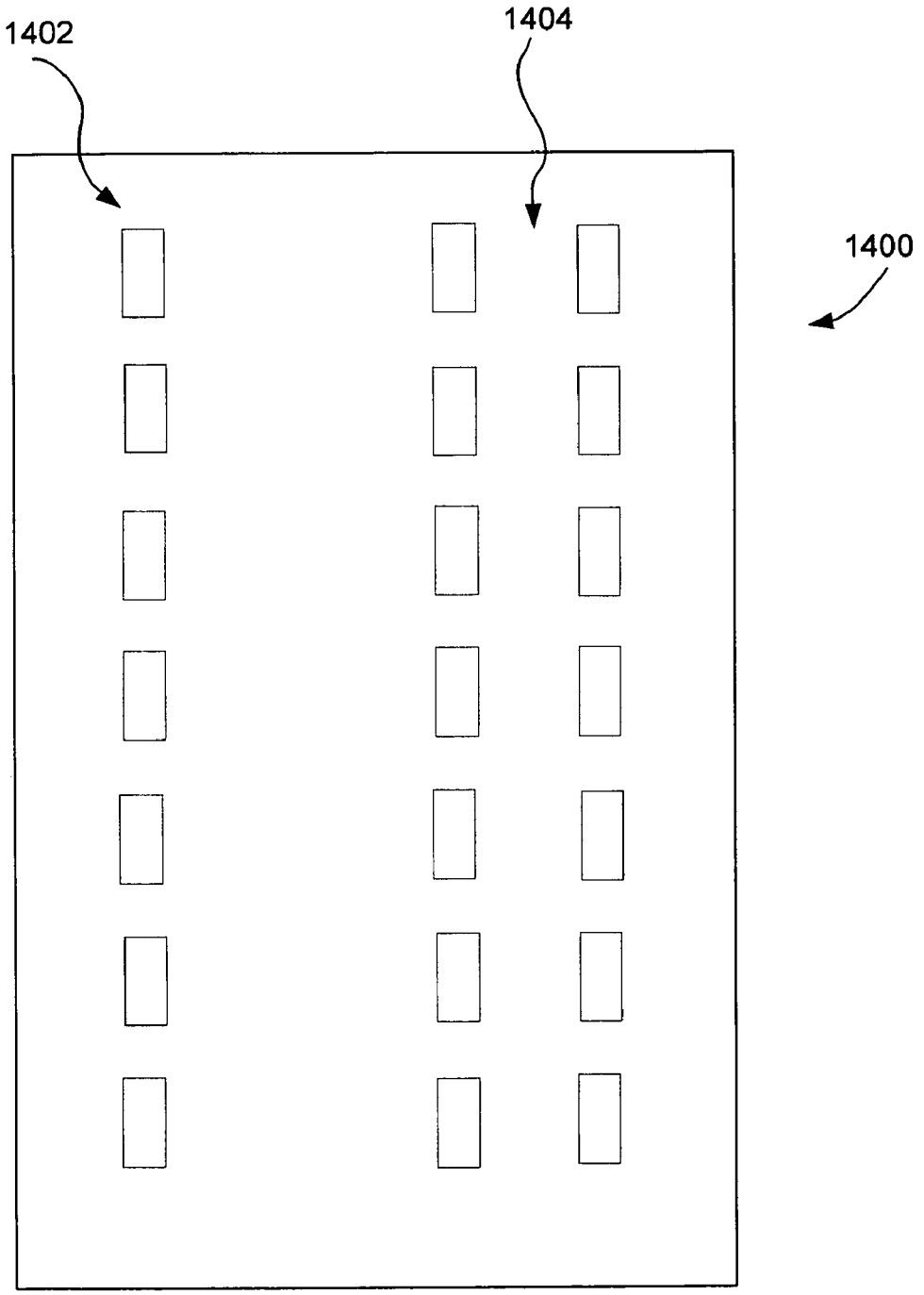

FIG. 3P

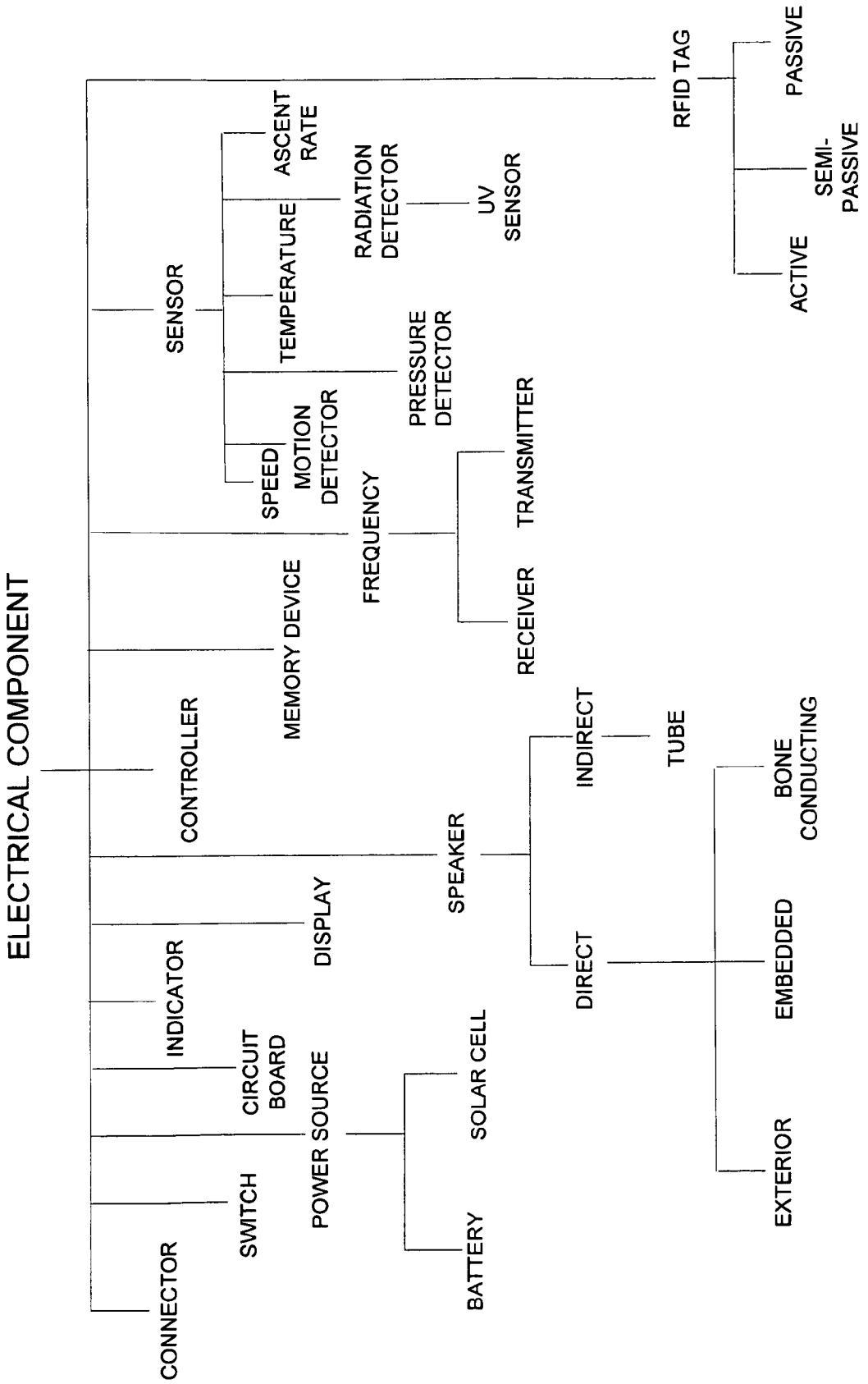
ELECTRICAL COMPONENT
CONNECTOR
SWITCH
CIRCUIT BOARD
INDICATOR
CONTROLLER
SENSOR
SPEED
MOTION DETECTOR
TEMPERATURE
ASCENT RATE
RADIATION DETECTOR
UV SENSOR
PRESSURE DETECTOR
RFID TAG
PASSIVE
SEMI-PASSIVE
ACTIVE
POWER SOURCE
BATTERY
SOLAR CELL
DISPLAY
MEMORY DEVICE
FREQUENCY
TRANSMITTER
RECEIVER
SPEAKER
DIRECT
INDIRECT
TUBE
EXTERIOR
EMBEDDED
BONE CONDUCTING

FIG. 4

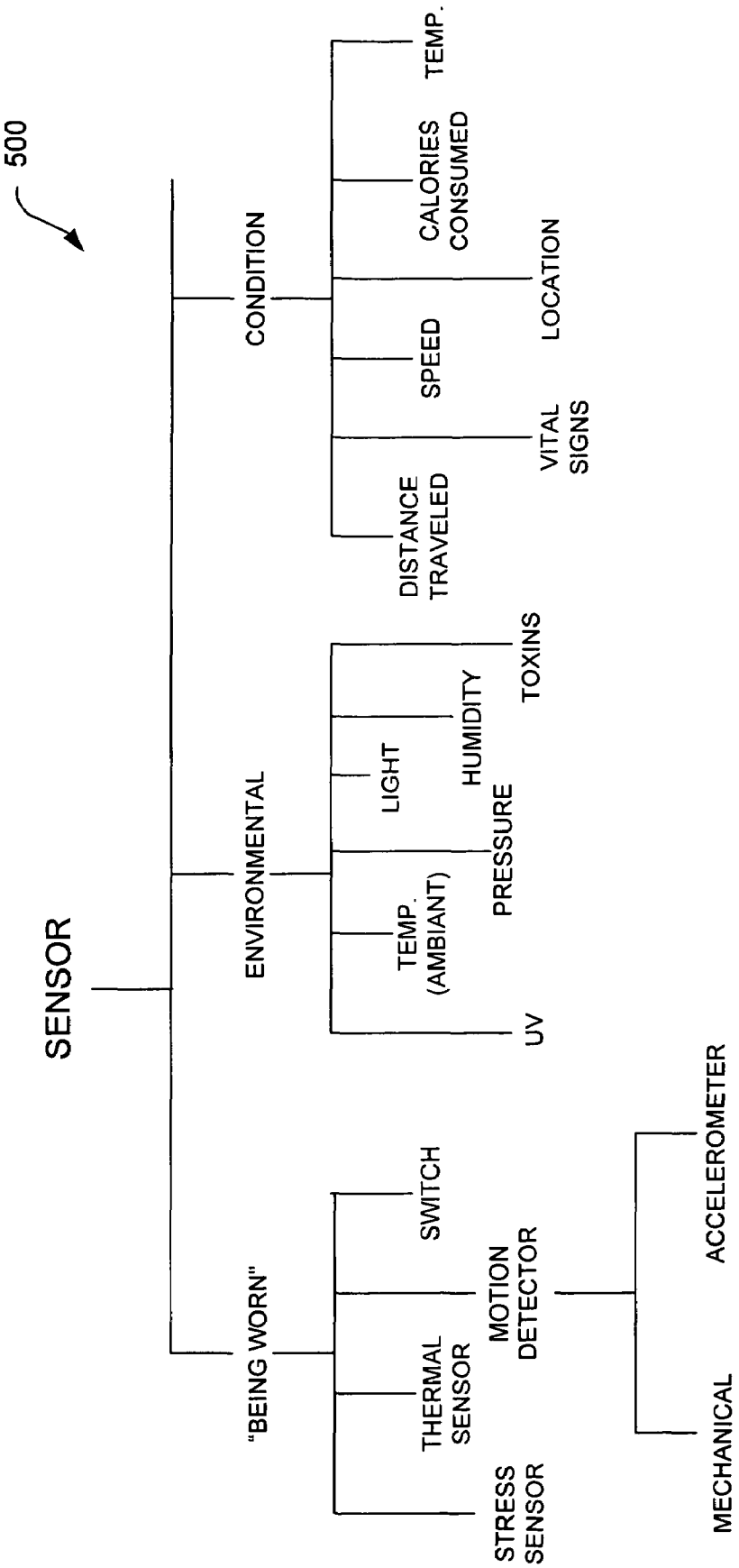
500
SENSOR
CONDITION
ENVIRONMENTAL
"BEING WORN"
TEMP.
CALORIES CONSUMED
LOCATION
SPEED
VITAL SIGNS
DISTANCE TRAVELED
TOXINS
HUMIDITY
LIGHT
PRESSURE
TEMP. (AMBIANT)
UV
SWITCH
MOTION DETECTOR
THERMAL SENSOR
STRESS SENSOR
ACCELEROMETER
MECHANICAL

FIG. 5

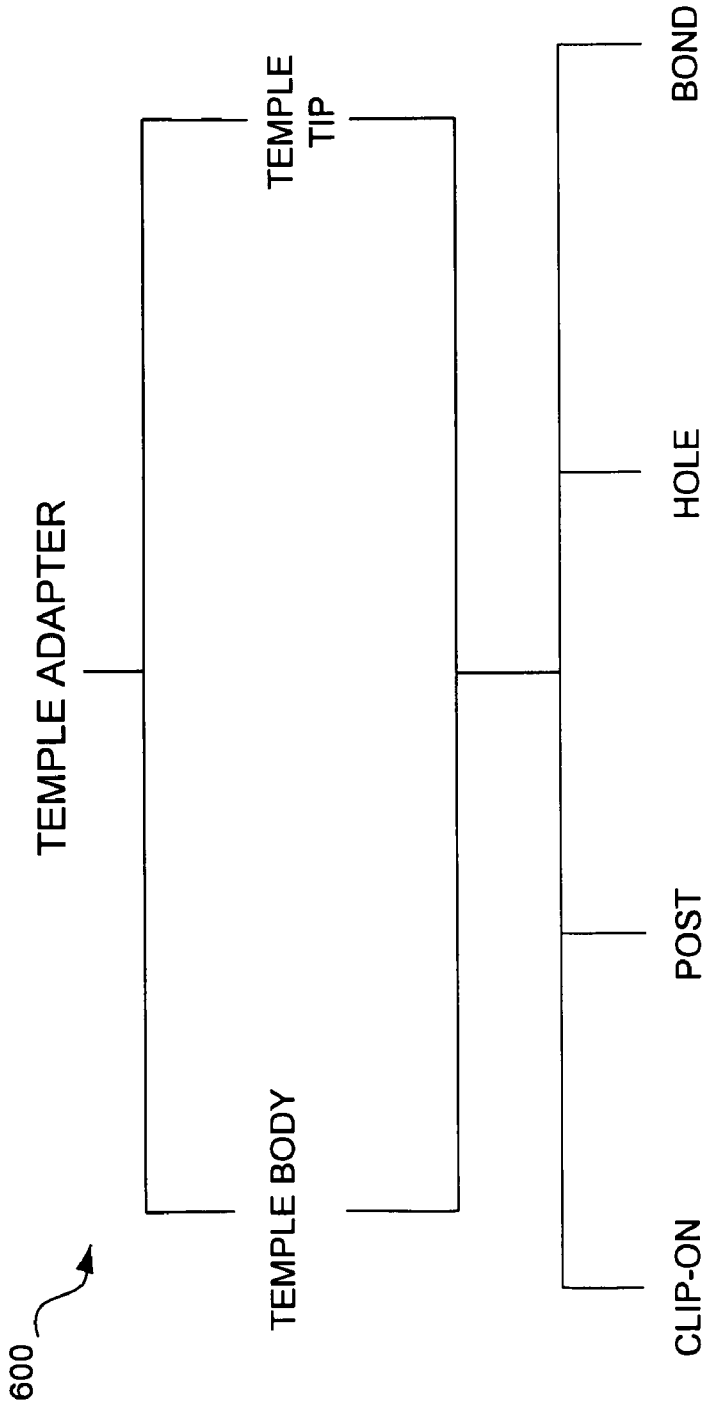
600
TEMPLE ADAPTER
TEMPLE BODY
TEMPLE TIP
CLIP-ON
POST
HOLE
BOND

FIG. 6

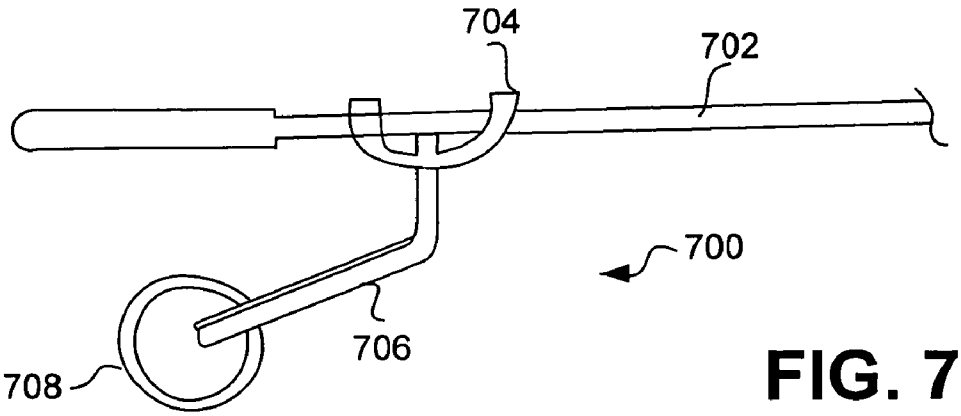

FIG. 7A

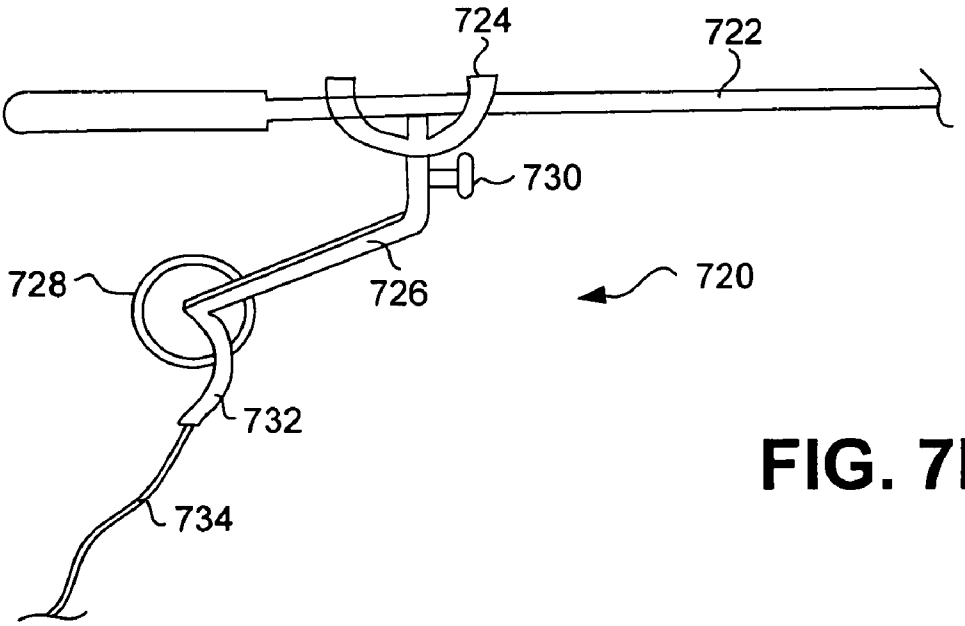

FIG. 7B

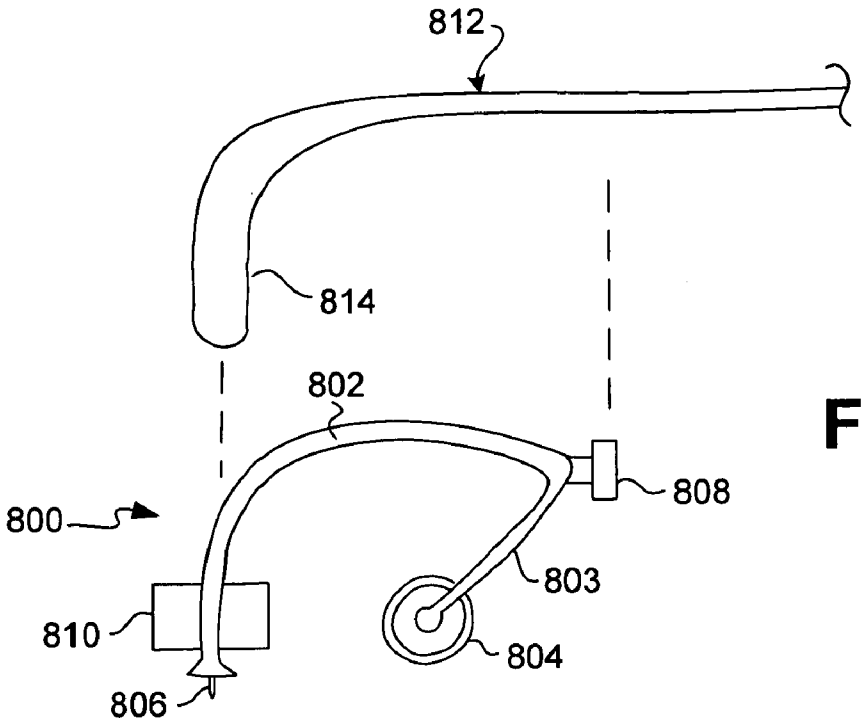

FIG. 8A

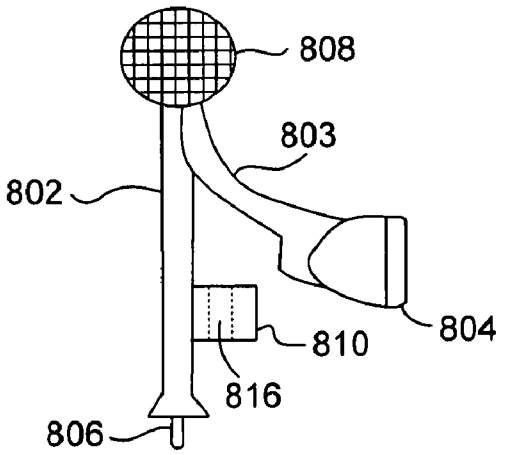

FIG. 8B

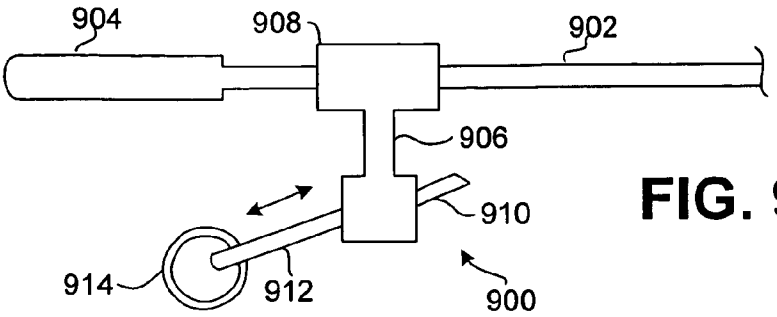

FIG. 9A

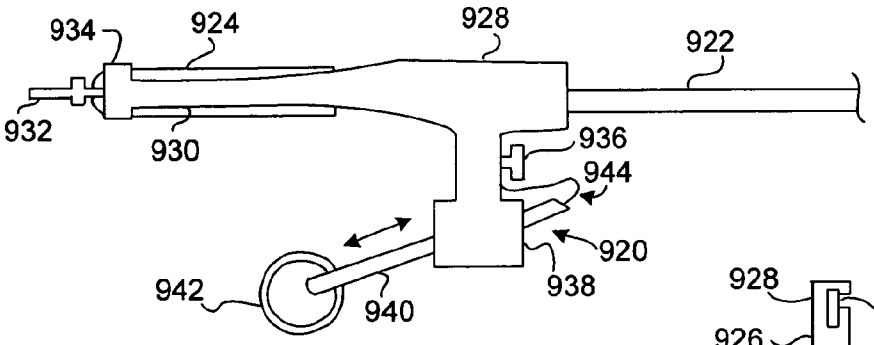

FIG. 9B

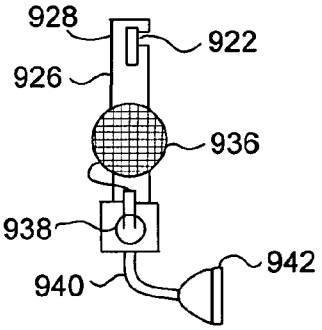

FIG. 9C

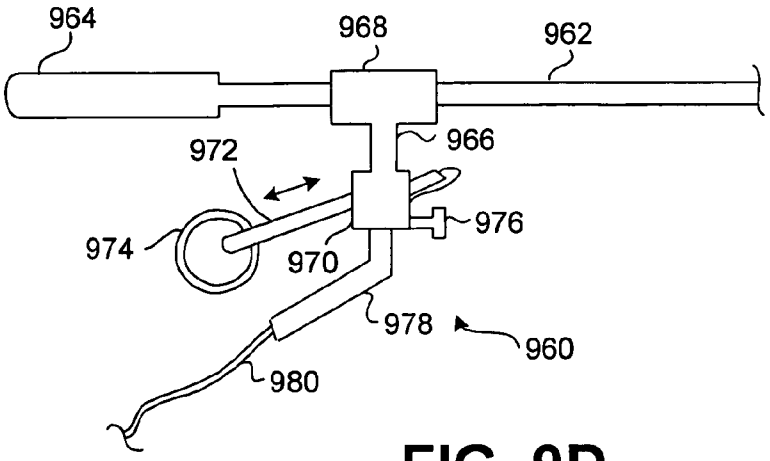

FIG. 9D

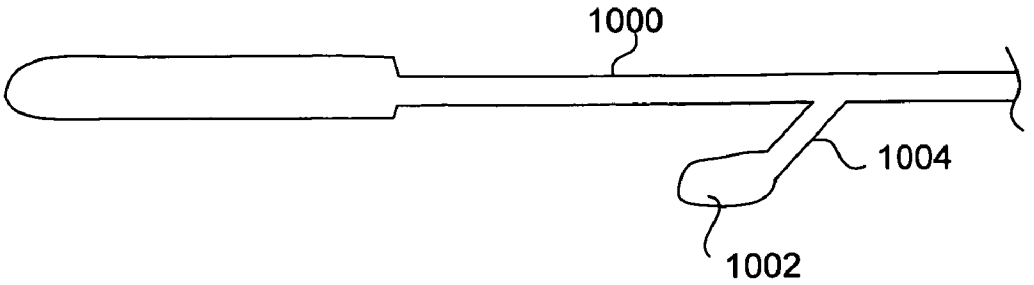

FIG. 10A

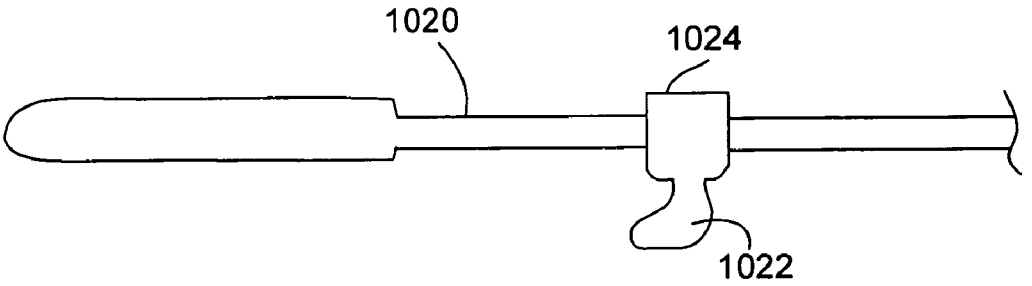

FIG. 10B

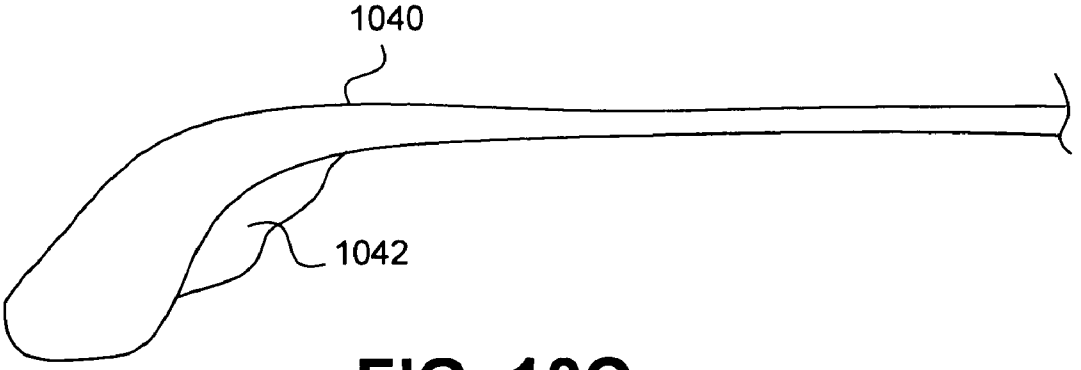

FIG. 10C

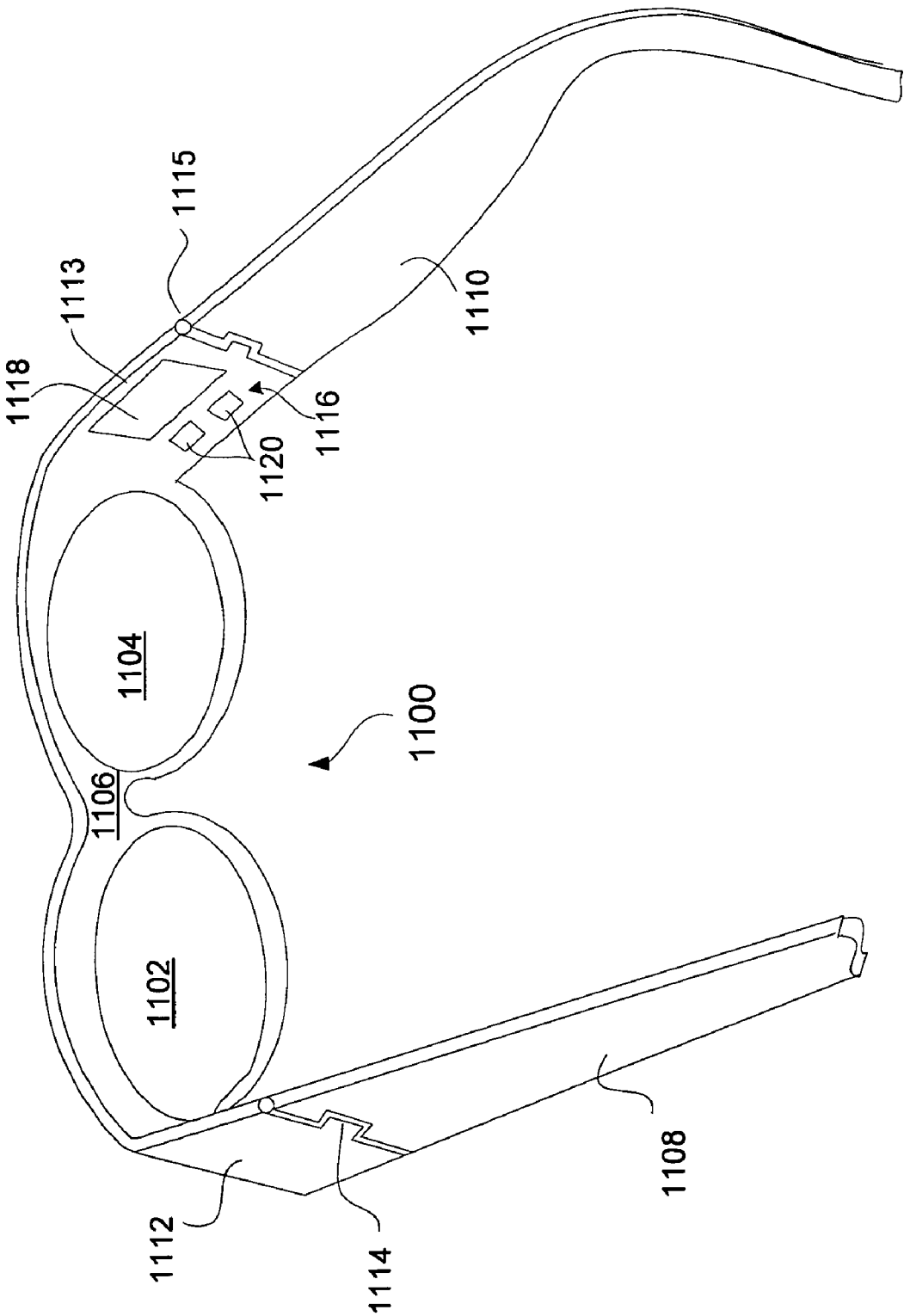
1115
1113
1118
1110
1116
1120
1104
1100
1106
1102
1108
1112
1114

FIG. 11A

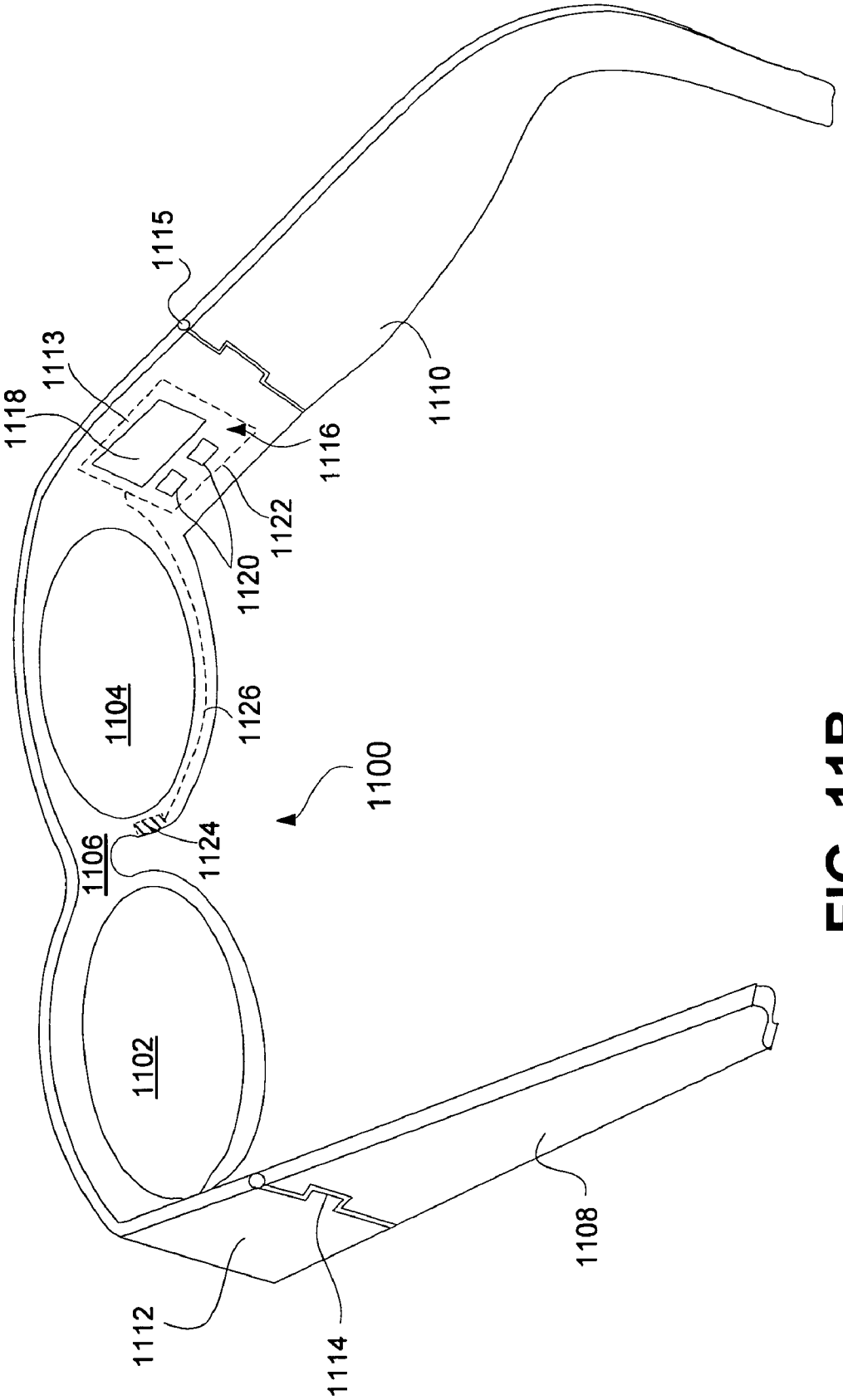
1115
1113
1118
1110
1116
1122
1120
1104
1126
1100
1106
1124
1102
1112
1114
1108

FIG. 11B

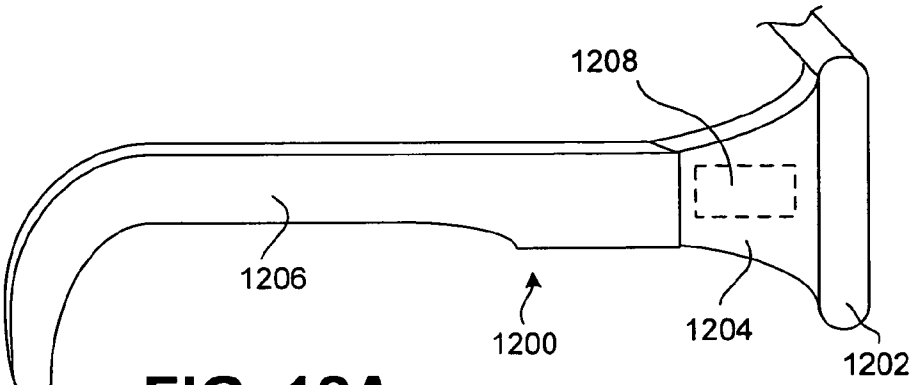

FIG. 12A

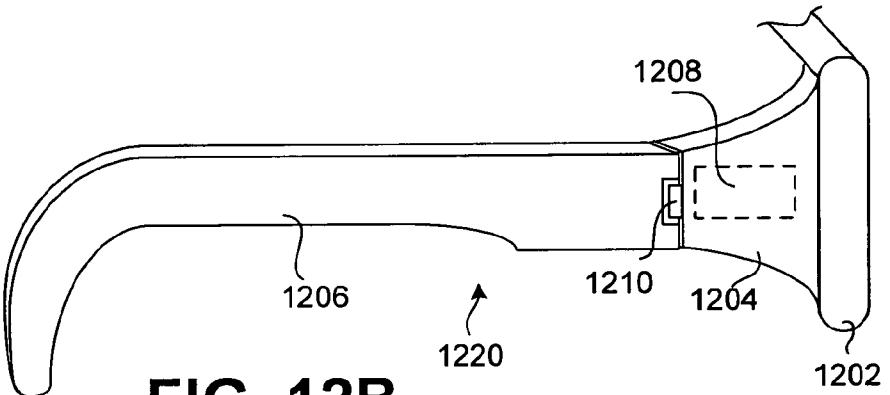

FIG. 12B

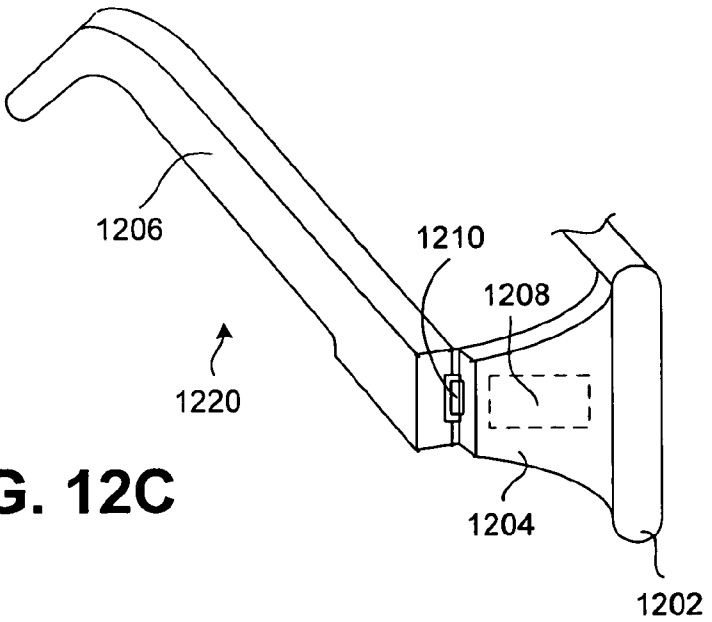

FIG. 12C

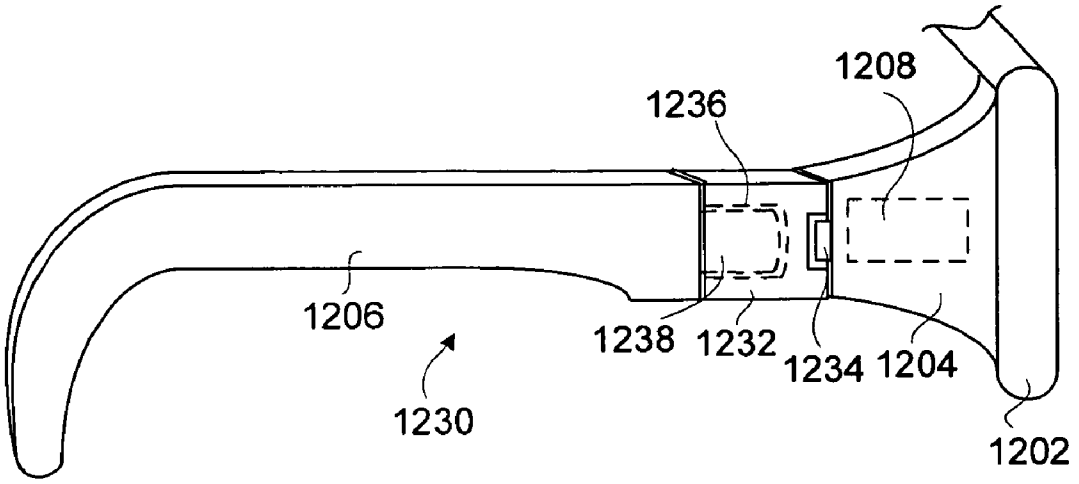

FIG. 12D

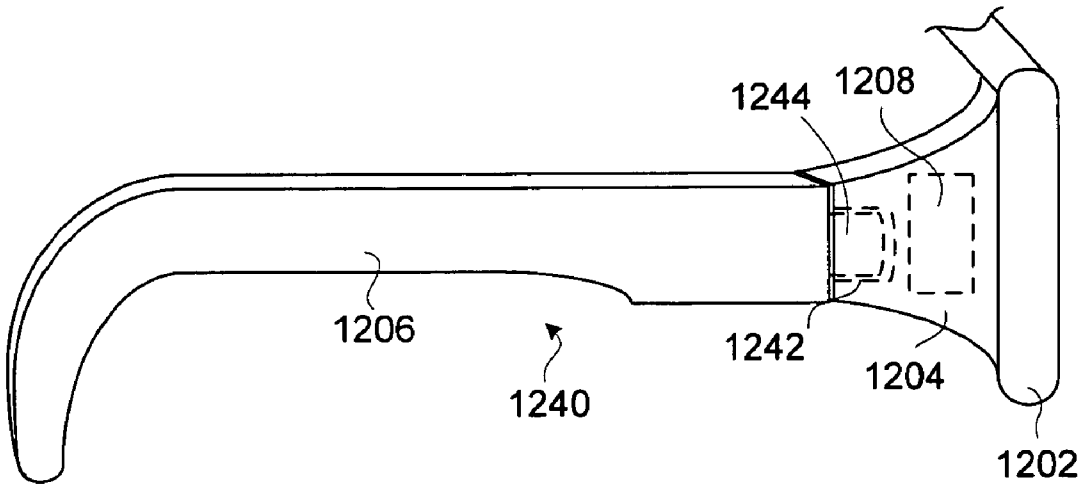

FIG. 12E

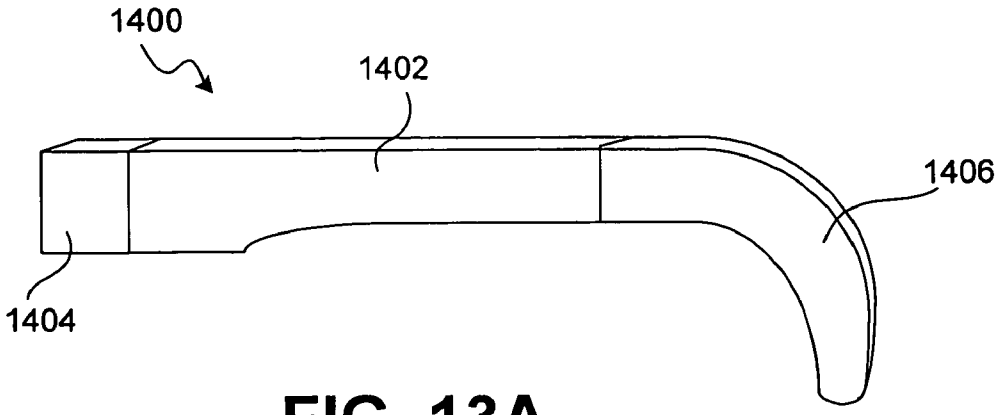

FIG. 13A

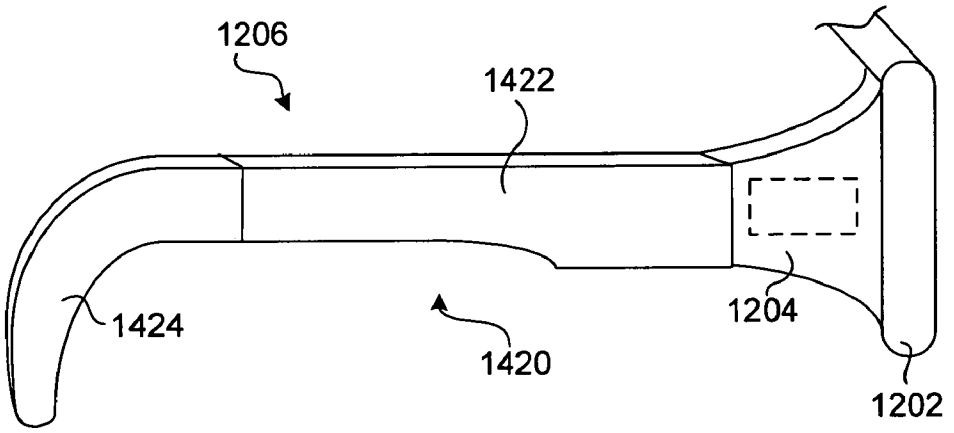

FIG. 13B

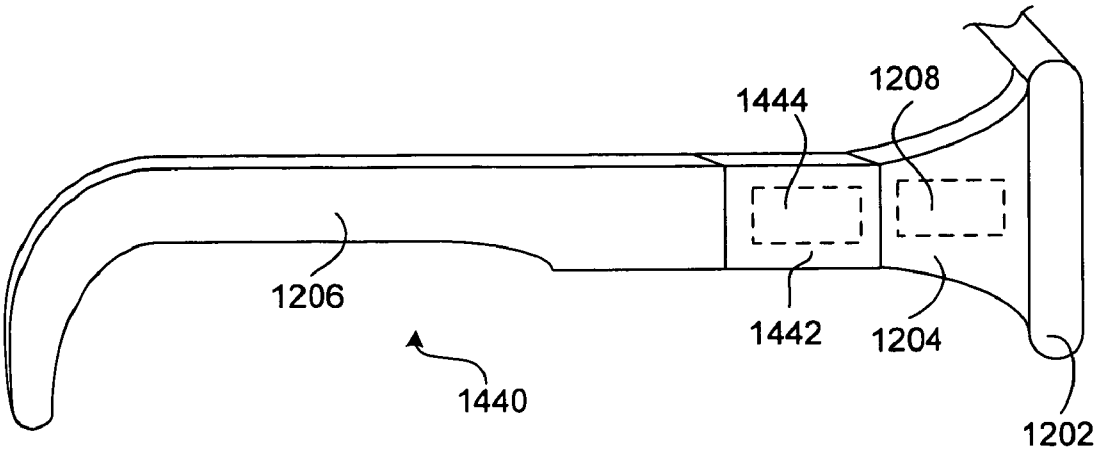

FIG. 13C

EYEWEAR SUPPORTING AFTER-MARKET ELECTRICAL COMPONENTS

CROSS-REFERENCE TO RELATED APPLICATIONS

This application is related to U.S. patent application Ser. No. 11/183,269, filed Jul. 15, 2005, and entitled "EYEGLASSES SUPPORTING AFTER MARKET ELECTRICAL COMPONENTS," which is hereby incorporated herein by reference, which in turn is related to U.S. patent application Ser. No. 10/964,011, filed Oct. 12, 2004, and entitled "TETHERED ELECTRICAL COMPONENTS FOR EYEGLASSES," which is hereby incorporated herein by reference, which in turn claims priority to each of: (i) U.S. Provisional Patent Application No. 60/509,631, filed Oct. 9, 2003, and entitled "TETHERED ELECTRICAL COMPONENTS FOR EYEGLASSES,"which is hereby incorporated herein by reference; (ii) U.S. Provisional Patent Application No. 60/527,565, filed Dec. 8, 2003, and entitled "ADAPTABLE COMMUNICATION TECHNIQUES FOR ELECTRONIC DEVICES," which is hereby incorporated herein by reference; (iii) U.S. Provisional Patent Application No. 60/562,798, filed Apr. 15, 2004, entitled "EYEWEAR WITH ULTRAVIOLET DETECTION SYSTEM," and which is hereby incorporated herein by reference; (iv) U.S. Provisional Patent Application No. 60/583,169, filed Jun. 26, 2004, entitled "ELECTRICAL COMPONENTS FOR USE WITH EYEWEAR, AND METHODS THEREFOR," and which is hereby incorporated herein by reference; (v) U.S. Provisional Patent Application No. 60/592,045, filed Jul. 28, 2004, entitled "EYEGLASSES WITH A CLOCK OR OTHER ELECTRICAL COMPONENT," and which is hereby incorporated herein by reference; and (vi) U.S. Provisional Patent Application No. 60/605,191, filed Aug. 28, 2004, entitled "ELECTRICAL COMPONENTS FOR USE WITH EYEWEAR, AND METHODS THEREFOR," and which is hereby incorporated herein by reference.

U.S. Patent Application No. 11/183,269 also claims priority to each of: (i) U.S. Provisional Patent Application No. 60/618,107, filed Oct. 12, 2004, and entitled "TETHERED ELECTRICAL COMPONENTS FOR EYEGLASSES," which is hereby incorporated herein by reference; (ii) U.S. Provisional Patent Application No. 60/620,238, filed Oct. 18, 2004, entitled "EYEGLASSES WITH HEARING ENHANCED AND OTHER AUDIO SIGNAL-GENERATING CAPABILITIES," and which is hereby incorporated herein by reference; (iii) U.S. Provisional Patent Application No. 60/647,836, filed Jan. 31, 2005, and entitled "EYEGLASSES WITH HEART RATE MONITOR," which is hereby incorporated herein by reference; and (iv) U.S. Provisional Patent Application No. 60/647,826, filed Jan. 31, 2005, and entitled "EYEWEAR WITH ELECTRICAL COMPONENTS," which Is hereby incorporated herein by reference.

This application claims priority to each of: (i) U.S. Provisional Patent Application No. 60/725,999, filed Oct. 11, 2005, and entitled "EYEWEAR SUPPORTING AFTER-MARKET ELECTRICAL COMPONENTS," which is hereby incorporated herein by reference; (ii) U.S. Provisional Patent Application No. 60/725,896, filed Oct. 11, 2005, and entitled "EYEGLASSES WITH ELECTRICAL COMPONENTS," which is hereby incorporated herein by reference; (iii) U.S. Provisional Patent Application No. 60/787,850, filed Apr. 1, 2006, and entitled "EYEGLASSES WITH A HEART RATE MONITOR," which is hereby incorporated herein by reference; and (iv) U.S. Provisional Patent Application No. 60/846,150, filed Sep. 20, 2006, and entitled "EYEGLASSES WITH ACTIVITY MONITORING," which is hereby incorporated herein by reference.

In addition, this application is related to each of: (i) U.S. patent application Ser. No. 10/822,218, filed Apr. 12, 2004, and entitled "EYEGLASSES FOR WIRELESS COMMUNICATIONS," which is hereby incorporated herein by reference; (ii) U.S. patent application Ser. No. 10/964,011, filed Oct. 12, 2004, and entitled "TETHERED ELECTRICAL COMPONENTS FOR EYEGLASSES,"which is hereby incorporated herein by reference; (iii) U.S. patent application Ser. No. 11/006,343, filed Dec. 7, 2004, and entitled "ADAPTABLE COMMUNICATION TECHNIQUES FOR ELECTRONIC DEVICES," which is hereby incorporated herein by reference; (iv) U.S. patent application Ser. No. 11/078,855, filed Mar. 11, 2005, and entitled "EYEWEAR WITH RADIATION DETECTION SYSTEM," which is hereby incorporated herein by reference; (v) U.S. patent application Ser. No. 11/078,857, filed Mar. 11, 2005, and entitled "RADIATION MONITORING SYSTEM," which is hereby incorporated herein by reference; (vi) U.S. patent application Ser. No. 11/183,283, filed Jul. 15, 2005, and entitled "EVENT EYEGLASSES," which is hereby incorporated herein by reference; (vii) U.S. patent application Ser. No. 11/183,262, filed Jul. 15,2005, and entitled "EYEGLASSES WITH HEARING ENHANCED AND OTHER AUDIO SIGNAL-GENERATING CAPABILITIES," which is hereby incorporated herein by reference; (viii) U.S. patent application Ser. No. 11/183,256, filed Jul. 15, 2005, and entitled "EYEGLASSES WITH ELECTRICAL COMPONENTS," which is hereby incorporated herein by reference; (ix) U.S. patent application Ser. No. 11/183,263, filed Jul. 15,2005, and entitled "EYEGLASSES WITH A CLOCK OR OTHER ELECTRICAL COMPONENT," which is hereby incorporated herein by reference; (x) U.S. patent application Ser. No. 11/183,276, filed Jul. 15, 2005, and entitled "EYEGLASSES WITH ACTIVITY MONITORING," which is hereby incorporated herein by reference; and U.S. patent application Ser. No. 11/546,685, filed Oct. 11, 2006, and entitled "EYEGLASSES HAVING A CAMERA", which is hereby incorporated herein by reference.

BACKGROUND OF THE INVENTION

Traditionally, eyeglasses have not contained or made any use of electrical components. In recent years, attempts to include electrical components within eyeglasses have had limited success. Even incorporating a small electrical component, such as a microphone, into an eyeglass frame may not be a simple task because, for example, of the necessary electrical connections with the electrical component. Clearly, larger scale electrical components would be more difficult to be provided in or attached to eyeglass frames. Many eyeglasses frames tend to be very compact and lightweight and thus may not have a lot of space for electrical components. Moreover, since eyeglass frames are often fashionable items whose designs are important, there are substantial design tradeoffs involved with providing or attaching electrical components to eyeglass frames.

Even if electrical components are provided in an eyeglass frame, the ability to alter or change electrical components is problematic. Conventionally, once an eyeglass frame is manufactured, electrical components embedded in the eyeglass frame may not be removed, nor can addition electrical components be added into the eyeglass frame. Attachment of electrical components to eyeglass frames has not proven to be reliable, design friendly or commercially successful.

Hence, there is a need for improved approaches to facilitate modifications or alterations to electrical components used with eyeglasses.

SUMMARY OF THE INVENTION

Generally speaking, the invention pertains to techniques for providing eyewear with electrical components. The electrical components can provide electrical technology to eyewear (e.g., eyeglasses) without having to substantially compromise aesthetic design principles of the eyewear. Often, the electrical components can be attached to the eyewear as an after-market enhancement. The electrical components can operate independently or together with other electrical components provided elsewhere.

One aspect of the invention relates to temple arrangements for use with eyeglasses. According to this aspect, a temple arrangement includes one or more electrical components. The one or more electrical components are attached to or at least partially embedded in the temple arrangement.

Another aspect of the invention relates to a temple adapter for use with eyeglasses. According to this aspect, a temple adapter includes one or more electrical components that are able to be mechanically (and optionally electrically) coupled to a temple (including a temple tip) of the eyeglasses.

Still another aspect of the invention relates to one or more swappable temple portions for a pair of glasses. In one embodiment, a temple has a forward portion and a rearward portion which can removably couple to one another. In one implementation, different rearward portions can be used with the same forward portion. In other words, the different rearward portions can be swapped with one another. In one implementation, the different rearward portions can offer different electrical components/functionalities to the pair of glasses. For example, the different rearward portions can provide different electrical components/functionalities such as: battery/power, wireless communication, radio, headset, GPS, pedometer, sun sensor, hearing enhancement, image/video capturing, etc. In another embodiment, different forward portions can be used with the same rearward portion.

Yet still another aspect of the invention relates to eyewear having an extended endpiece so as to facilitate placement of one or more electrical components at the extended endpiece. The one or more electrical components can operate independently or together with other electrical components provided elsewhere. For example, other electrical components can be provided in other regions of the frame for the eyewear. In one particular example, the other electrical components can be located in a bridge area of the frame for the eyewear. In such an example, given that the endpiece is extended, the one or more electrical components can be placed at the endpiece and thereby communicate with other electrical components in a front area or the other endpiece without having to communicate through a hinge or connector.

The electrical components can support signal capturing, signal processing, signal transmission, signal display, signal storage and/or power provision. The signals can be, for example, analog or digital signals. The electrical components can, for example, be used to provide audio output and/or audio pick-up. The electrical components may include and/or control one or more sensors to monitor and/or signal the conditions of a user of the eyewear. The electrical components may also include and/or control one or more operation indicators to signal operational status of at least some other electrical components. In addition, the electrical components can be or pertain to a circuit board or module, which includes a plurality of electrical components.

The invention can be implemented in numerous ways, including a method, system, device, apparatus, and a computer readable medium. Several embodiments of the invention are discussed below.

Other aspects and advantages of the invention will become apparent from the following detailed description taken in conjunction with the accompanying drawings which illustrate, by way of example, the principles of the invention.

BRIEF DESCRIPTION OF THE DRAWINGS

The invention will be readily understood by the following detailed description in conjunction with the accompanying drawings, wherein like reference numerals designate like structural elements, and in which:

FIG. **1** is a perspective view of a pair of glasses according to one embodiment of the invention.

FIG. **2** illustrates a diagram of a number of different embodiments of temple arrangements according to the invention.

FIG. **3**A is a diagram of a temple arrangement according to one embodiment of the invention.

FIG. **3**B is a diagram of a temple cover that at least partially covers a temple (e.g., temple and/or temple tip) according to one embodiment of the invention.

FIG. **3**C is a diagram of a fit-over temple that at least partially fits over a temple (e.g., temple and/or temple tip) according to one embodiment of the invention.

FIGS. **3**D and **3**E are diagrams of a temple arrangement according to another embodiment of the invention.

FIGS. **3**F-**3**H are diagrams of exemplary multi-part temples according to different embodiments of the invention.

FIGS. **3**I-**3**K are diagrams of exemplary rearward portions of multi-part temples according to several embodiments of the invention.

FIGS. **3**L-**3**O are diagrams of exemplary forward portions of multi-part temples according to several embodiments of the invention.

FIG. **3**P is a diagram of an eyewear products display apparatus according to one embodiment of the invention.

FIG. **4** shows examples of different electrical components according to the invention.

FIG. **5** is a chart that depicts examples of sensors suitable for use according to the invention.

FIG. **6** illustrates a diagram of a number of different embodiments of temple adapters according to the invention.

FIG. **7**A is a diagram of a temple adapter according to one embodiment of the invention.

FIG. **7**B is a diagram of a temple adapter according to another embodiment of the invention.

FIGS. **8**A and **8**B are diagrams of a temple adapter according to another embodiment of the invention.

FIG. **9**A is a diagram of a temple adapter according to one embodiment of the invention.

FIGS. **9**B and **9**C are diagrams of a temple adapter according to another embodiment of the invention.

FIG. **9**D is a diagram of a temple adapter according to still another embodiment of the invention.

FIGS. **10**A-**10**C are diagrams of a temple having a bone conducting element according to still other embodiments of the invention.

FIG. **11**A illustrates a pair of glasses according to one embodiment of the invention.

FIG. **11**B illustrates a pair of glasses according to another embodiment of the invention.

FIGS. **12**A-**12**E illustrate a side view of eyeglass frames having an extended temples according to several embodiment of the invention.

FIG. **13**A illustrates a temple having multiple parts according to one embodiment of the invention.

FIG. **13**B illustrates a portion of an eyeglass frame according to one embodiment of the invention.

FIG. **13**C illustrates a portion of an eyeglass frame according to another embodiment of the invention.

DETAILED DESCRIPTION OF THE INVENTION

The invention pertains to techniques for providing eyewear with electrical components. The electrical components can provide electrical technology to eyewear (e.g., eyeglasses) without having to substantially compromise aesthetic design principles of the eyewear. Often, the electrical components can be attached to the eyewear as an after-market enhancement. The electrical components can operate independently or together with other electrical components provided elsewhere.

One aspect of the invention relates to temple arrangements for use with eyeglasses. According to this aspect, a temple arrangement includes one or more electrical components. The one or more electrical components are attached to or at least partially embedded in the temple arrangement.

Another aspect of the invention relates to a temple adapter for use with eyeglasses. According to this aspect, a temple adapter includes one or more electrical components that are able to be mechanically (and optionally electrically) coupled to a temple (including a temple tip) of the eyeglasses.

Still another aspect of the invention relates to one or more swappable temple portions for a pair of glasses. In one aspect, a temple has a forward portion and a rearward portion which can removably couple to one another. In one embodiment, different rearward portions can be used with the same forward portion. In other words, the different rearward portions can be swapped with one another. In one implementation, the different rearward portions can offer different electrical components/functionalities to the pair of glasses. For example, the different rearward portions can provide different electrical components/functionalities such as: battery/power, wireless communication, radio, headset, GPS, pedometer, sun sensor, hearing enhancement, image/video capturing, etc. In another embodiment, different forward portions can be used with the same rearward portion.

The electrical components can support signal capturing, signal processing, signal transmission, signal display, signal storage and/or power provision. The signals can be, for example, analog or digital signals. The electrical components can, for example, be used to provide audio output and/or audio pick-up. The electrical components may include and/or control one or more sensors to monitor and/or signal the conditions of a user of the eyewear. The electrical components may also include and/or control one or more operation indicators to signal operational status of at least some other electrical components. In addition, the electrical components can be or pertain to a circuit board or module, which includes a plurality of electrical components.

Embodiments of different aspects of the invention are discussed below with reference to FIGS. **1**-**10**C. However, those skilled in the art will readily appreciate that the detailed description given herein with respect to these figures is for explanatory purposes as the invention extends beyond these limited embodiments.

FIG. **1** is a perspective view of a pair of glasses **100** according to one embodiment of the invention. The glasses **100** include a frame and a pair of lenses **102**. The frame has lens holders **104** that hold the lenses **102** in position. The frame also has a bridge **106**. The glasses **100** further include a pair of temples (or arms) **108**. The temples **108** are considered part of the frame. As shown in FIG. **1**, each of the temples **108** is coupled to one of the lens holders **104** by a hinge **109**. In one embodiment, the temples **108** can be removed from the frame (e.g., at the hinge **109**).

In addition, temple arrangements **110** are attached to the temples **108**. Here, one or both of the temples **108** can include a temple arrangement **110**. A temple arrangement **110** can include one or more electrical components **112**. In one embodiment, the temple arrangements **110** can be considered separate parts that can be attached to respective temples **108**. Once attached, the temple arrangements **110** can be considered part of, or an extension to, the temples **108**.

By having one or more electrical components **112** in one or more of the temple arrangements **110**, electrical capabilities can be provided to the glasses **100** without burdensome impact to the design of other parts of the frames. Moreover, by providing electrical components in one or more of the temple arrangements **112**, electrical capabilities can be added to eyeglasses in an after-market manner. Still further, by replacing temple arrangements, a user could alter the electrical capabilities of his eyeglasses.

In one embodiment, the glasses **100** do not have any other embedded electrical components, such as within the frame, except those in one or both of the temple arrangements **112**. In another embodiment, the glasses **100** include one or more other electrical components embedded or attached to the frame of the glasses **100** and the components are electrically coupled to the one or more electrical components **112** in one or both of the temple arrangements **110**.

In different embodiments, the glasses **100** can be, for example, a pair of sunglasses, fit-over glasses, prescription glasses, reading glasses, or safety glasses.

FIG. **2** illustrates a diagram of a number of different embodiments of temple arrangements **200** according to the invention. A temple arrangement **200** can be a temple tip, a temple fit-over, or a temple cover. In one embodiment, a temple tip is a structure that attaches to a rearward portion of a temple. In one embodiment, a temple tip can pertain to an enclosure that grabs onto a rearward portion of a temple. A temple tip is particularly common for wire frame eyeglass where the temple tip attaches to the rearward end of the temple and provides a surface suitable for positioning proximate to the user's ear. For example, FIG. **1** illustrates the temple arrangement **112** implemented as a temple tip.

In one embodiment, a temple tip is removable from its corresponding temple so that it can be replaced. The temple tip can be originally provided with the purchase of a pair of eyeglasses. Alternatively, the temple tip can be a replacement part that can be purchased separately and subsequently mounted onto a rearward portion of a temple of a pair of eyeglasses after removing any original temple tip. In another embodiment, a temple tip is permanently held onto the corresponding temple, for example, by an adhesive (e.g., epoxy, glue, etc.).

In one embodiment, a temple fit-over fits over at least a portion of the rearward end of a temple. If the rearward end of the temple has a temple tip, at least a portion of the temple tip can be fitted over by the temple fit-over. In one embodiment, a temple cover slides over and at least partially covers a portion of the rearward end of a temple. If the rearward end of the temple has a temple tip, at least a portion of the temple tip can be covered by the temple cover.

A temple cover is typically made of a material that is more flexible than a temple fit-over. For example, a temple cover can be made of a fabric or other materials, such as a sock or sleeve; while a temple fit-over can be made of plastic.

A temple arrangement **200** can be made of the same or different materials than the temple or other parts of the frame of the pair of eyeglasses. To illustrate, a pair of glasses with a metal frame can have non-metallic temple tips. A temple arrangement **200** can be of a color that is the same as, or similar to, or different from, that of the temple.

A temple arrangement **200** can be held onto a temple by frictional force. For example, if the temple arrangement **200** is a temple fit-over, it can be held onto an existing temple or temple tip by frictional force. Here, the temple fit-over is often removable. In another embodiment, the temple arrangement **200** can be permanently held onto its corresponding temple or temple tip. For example, the temple arrangement can be permanently held onto the corresponding temple or temple tip, for example, by an adhesive (e.g., epoxy, glue, etc.).

Depending on applications, a temple arrangement can be of different shapes. The shape can depend on the type of glasses. For example, a temple arrangement for fit-over glasses can be bigger than a temple arrangement for prescription glasses. The shape of the temple arrangement can also depend on applications for the electronic component(s) that are fully or partially embedded in the temple arrangement. Of course, aesthetic reasons can also influence shape (e.g., design, size, style) of a temple arrangement.

In one embodiment, the temple arrangement is a structure that has at least one electrical component attached thereto or at least partially embedded therein. In another embodiment, all of the electrical components to be provided with the temple arrangement are at least partially embedded in the temple arrangement.

FIG. **3**A is a diagram of a portion **300** of a pair of eyeglasses according to one embodiment of the invention. The portion **300** includes a temple **302** that is associated with a pair of eyeglasses. Over the end of the temple **302** that is opposite the associated lens holder, a temple tip **304** is provided. The temple tip **304** can, for example, be held to the temple **302** by frictional forces and/or adhesive. The temple tip **304** includes at least one electrical component **306** that is at least partially embedded therein. A wide range of functionalities can be provided by the at least one electrical component **306**. The temple tip **304** can be considered separate from or part of the temple **302**. For example, when the temple tip **304** is not attached to the temple **302**, the temple tip **304** is considered a separate part. As another example, when the temple tip **304** is attached to the temple **302**, the temple tip **304** can be considered separate from or part of the temple **302**.

The temple tip **304** can be manufactured and delivered to resellers or retailers and thereafter sold attached to eyeglasses. Alternatively, the temple tip **304** can be separately provided as an optional replacement temple tip for an original temple tip. Hence, after or during purchasing a pair of eyeglasses, upgrade of the eyeglasses can be had by replacing an existing temple tip with a replacement temple tip. The colors and shapes of the temple tip **304** can vary widely. In the after manufacturing environment, the reseller or retailer can be provided with a range of different colors and shapes so that a user can receive a replacement temple tip that reasonably matches the color and shape of the temple or that provides an altered appearance as desired by the user.

A number of embodiments have been described regarding one or more electrical components at least partially embedded in a pair of glasses. In one embodiment, one or more electrical components are at least partially embedded in a temple tip of a pair of glasses. Temple tips are relatively common for wire or metal frames which have wire or metal temples. The pair of glasses has a first and a second lens holders for receiving lenses. Each of the lens holders has a first side and a second side. The pair of glasses has a bridge element that couples the first side of the first lens holder to the second side of the second lens holder. The pair of glasses also includes a first temple and a second temple. The first temple is pivotally secured to the second side of the first lens holder through a joint, while the second temple is pivotally secured to the first side of the second lens holder through another joint. A temple typically has two ends, a first end and a second end. The first end can be the end that is pivotally secured to a lens holder through a joint, and the second end can be the other end of the temple. It is not uncommon that a temple includes a main body and an enclosure that grabs onto the main body of the temple. The second end is typically where the enclosure grabs onto the main body. The enclosure can be made of a different material than the main body of the temple. In one embodiment, such an enclosure is a temple tip, and there is an electrical component, partially or fully, embedded in the temple tip. There can also be a connector at the temple tip. In another embodiment, the temple tip can include a female connector. In still another embodiment, as a temple tip grabs onto the main body of the temple, a connector at the temple tip (such as a female connector) can make electrical contact with another connector (such as a male connector) at the main body of the temple. Typically, particularly before a pair of glasses has been extensively worn, the temple tip can be removed and re-inserted back on to the main body of the temple without much difficulty. Such a temple tip can be an after-market component, with different temple tips having different electrical components to serve different functions.

Besides a temple tip such as illustrated in FIG. **3**A, a temple tip can also be effectively modified by a fit-over temple or temple cover.

FIG. **3**B is a diagram of a temple cover **320** that at least partially covers a temple (e.g., temple and/or temple tip) according to one embodiment of the invention. As an example, the temple cover **320** can be made of a fabric or other material, such as a sock or sleeve, that slides over and at least partially covers a temple or a temple tip. The temple cover **320** can include at least one electrical component **322** that is either attached thereto or at least partially embedded therein. The temple cover **320** can also include an opening **324** so as to receive a temple or a temple tip. In one embodiment, the temple cover **320** is placed over a substantial portion of a temple tip, and the opening **324** can extend to a far end **326** so as to receive all or a substantial part of the temple tip. The temple cover **320** can, for example, be held to a temple or a temple tip by frictional forces and/or adhesive.

FIG. **3**C is a diagram of a fit-over temple **340** that at least partially fits over a temple (e.g., temple and/or temple tip) according to one embodiment of the invention. For example, the fit-over temple **340** can at least partially fit-over a temple tip. The fit-over temple **340** includes at least one electrical component **342** that is either attached thereto or at least partially embedded therein. The fit-over temple **340** can also include an opening **344** so as to receive a temple or a temple tip. The depth and/or width of the opening **344** within the fit-over temple **340** can vary depending on the extent to which it is being fit over a temple or a temple tip. The fit-over temple **340** can, for example, be held to a temple or temple tip by frictional forces and/or adhesive. As an example, the fit-over temple **340** can be plastic or other material. The colors and shapes of the fit-over temple **340** can have a lot of variations.

A wide range of functionalities can be provided by the at least one electrical component (e.g., electrical component **322** and **342**). In the after manufacturing environment, the reseller or retailer can be provided with a range of different colors and shapes so that a user can receive a replacement temple cover or fit-over temple that reasonably matches the color and shape of the temple or that provides an altered appearance as desired by the user.

FIG. **3**D and **3**E are diagrams of a temple arrangement **360** according to another embodiment of the invention. FIG. **3**D is a side view of the temple arrangement **360**, and FIG. **3**E is a front view of the temple arrangement **360**. In this embodiment, the temple arrangement **360** is a temple tip that can be attached to a temple (e.g., temple body) of a pair of eyeglasses. The temple arrangement **360** includes a speaker housing **362** allowing a speaker **364** to be at least partially embedded within the temple arrangement **360**. An audio sound output by the speaker **364** is coupled to an ear plug **366** by way of the speaker housing **362** and a tube **368**. Typically, the tube **368** is a flexible tube, such as a flexible plastic tube. A user of the eyeglasses having the temple arrangement **360** can place the ear plug **366** within her ear to facilitate coupling of the audio sound from the speaker **364** to the ear. The tube **368** can have a disconnection region **370** whereby at least a section of the tube **368** and the attached ear plug **366** can be removed from the temple arrangement **360**, such as when audio output is not being listened to. The tube **368** and/or the speaker housing **362** can also be capable of rotating with respect to the temple arrangement **360** to facilitate ease of use. Still further, the temple arrangement **360** can include a connector **372**, such as a male audio connector (e.g., 2.5 mm, stereo mini-phone connector). The connector **372** provides a means to electrically connect an external audio source to the speaker **364** within the temple arrangement **360**. For example, at least one wire (not shown) that is internal to the temple arrangement **360** can be used to electrically connect the speaker **364** to the connector **372**.

In one embodiment, an electrical component is a component of an electrical circuit or system, and the electrical circuit or system is for performing at least a desired, intended or predetermined function.

In one embodiment, a temple tip, fit-over temple or temple cover according to the invention can further include a connector or cable to facilitate electrical connection with the at least one electrical component that is either attached to a temple or a temple tip or at least partially embedded therein.

Still another aspect of the invention relates to one or more swappable temple portions for a pair of glasses. According to this aspect, a temple has a forward portion and a rearward portion which can removably couple to one another. In one embodiment, different rearward portions can be used with the same forward portion. In other words, the different rearward portions can be swapped with one another. In one implementation, the different rearward portions can offer different electrical components/functionalities to the pair of glasses. For example, the different rearward portions can provide different electrical components/functionalities such as: battery/power, wireless communication, radio, headset, GPS, pedometer, sun sensor, hearing enhancement, image/video capturing, etc. In another embodiment, different forward portions can be used with the same rearward portion.

In one embodiment, only one of the temples of an eyeglass frame has swappable part(s). In another embodiment, both of the temples of an eyeglass frame have swappable part(s). Regardless, viewed in one way, each of the swappable parts at a temple can be viewed as a removable peripheral device to the eyeglass frame.

In one embodiment, a temple is a multi-part temple. The multi-part temple includes at least a forward (or first) part and a rearward (or second) part. The forward part is typically integral with or coupled to an eyeglass frame (such as at the lens holder or hinge region of an eyeglass frame). The rearward part removably connects with the forward part. The removable connection allows the rearward part to be removed for any of a variety of reasons. For example, the rearward part can be removed to: (1) connect a different rearward part; (2) connect to a peripheral bus (e.g., for data download); or (3) charge a battery (e.g., located in forward or rearward part).

The removable connection between the forward and rearward parts of the multi-part temple physically attaches and secures the rearward part to the forward part by way of at least a mechanical connection. The mechanical connection can be provided in a variety of ways, such as through use of one or more connectors, snaps, detents, bayonets, etc.

In addition, the removable connection between the forward and the rearward parts of the multi-part temple can provide (or facilitate) an electrical connection between the forward and rearward parts. In one embodiment, the forward part of the temple (or some other part of the eyeglass frame) includes one or more electrical components, and the rearward part includes one or more electrical components. In such case, the electrical connection serves to electrically connect one or more of the electrical components of the forward part (or other part of the eyeglass frame) with one or more of the electrical components of the rearward part. For example, the forward part of the temple can include one or more electronic components (e.g., integrated circuit) that are electrically connected to one or more electronic components in the rearward part.

However, in the event that all needed electrical components are within the rearward part of the multi-part temple, electrical connection between the forward part and the rearward part may not be needed. Accordingly, in some embodiments, no electrical components will be needed in the forward part; instead, all the needed electrical components will be provided in the rearward part.

Various embodiments of eyewear can utilize the multi-part temples to provided electrical components to eyeglass frames in a convenient and user friendly manner. As one example, consider an eyeglass frame that supports a camera. The electrical components can include an image sensor, a memory, a microcontroller, and a battery. One or more of these electrical components can be in the forward part (or other part of the eyeglass frame) and the remaining one or more electrical components can be in the rearward part. For example, the image sensor and the microcontroller can be in the forward part and the battery and the memory can be in the rearward part. Additionally, if the camera makes use of a display (e.g., LCD), the display could be in either the forward part or the rearward part. The eyeglass frame might also include other electrical components for additional functionality. Examples of additional functionality include: global positioning system, antenna, user interface (e.g., buttons, switches, etc), display, microphone, earphone, etc. In another example, all of the electrical components supporting the camera functionality can be provided in the rearward part of the multi-part temple.

In one embodiment, the electrical components provided in the forward part are able to be shared with different rearward parts. In other words, different rearward parts can be swapped. For example, a different rearward part can be connected to the forward part to provide the eyeglass frame with different functionality. Examples of some of the different functionality that can be provided in this matter include: radio

receiver (e.g., satellite radio), media player, pedometer, wireless communication, sun monitor, hearing enhancement, global positioning, etc. In a first example, in the case of a radio receiver, the forward part can include a display, while the rearward part can include a tuner, a rechargeable battery, an amplifier, and earphones or earphone connectors. In a second example, in the case of a media player, the forward part can include a display, while the rearward part can include a media player module, a memory, a rechargeable battery, a switch and earphones or earphone connectors. In a third example, in the case of a pedometer, the forward part can include a display, while the rearward part can include an accelerometer, a rechargeable battery, a memory and a microcontroller. In a fourth example, in the case of a wireless communication device, the forward part can include a display, while the rearward part can include a battery, an antenna, a wireless module, earphones or earphone connectors, and a user interface. The user interface, for example, can include buttons, which, for example, can facilitate user input with respect to on/off, volume, and accept or decline call. In this case, information displayed can include battery status, device status, caller ID, etc. In these four examples, the forward part includes a display and thus the forward part can be used (i.e., shared) with any of the different rearward parts to thereby provide different functionality to the eyeglass frames. Hence, by swapping one of these different rearward parts, the same pair of eyeglasses can provide different functionality.

A multi-part temple can be manufactured and delivered to resellers or retailers and thereafter sold attached to eyeglasses. Alternatively, a rearward part can be separately provided as a separate part or as an optional rearward part that can be swapped with an original rearward part. Hence, after or during purchasing a pair of eyeglasses, alteration, upgrade or conversion of the eyeglasses can be had by swapping in another rearward part. The electrical components or functions supported by the rearward part can vary widely. The colors and shapes of the rearward parts also can vary widely. For example, in the retailing or after manufacturing environment, the reseller or retailer can be provided with a range of different colors and shapes so that a user can receive a rearward part that reasonably matches the color and shape of the multi-part temple or that provides an altered appearance as desired by the user.

FIG. **3**F is a diagram of a multi-part temple **1300** according to one embodiment of the invention. The multi-part temple **1300** has a forward part **1302** and a rearward part **1304**. The rearward part **1304** is removably connected to the forward part **1302** such that the rearward part **1304** is removable. Once removed, the same rearward part or a different rearward part can be later connected to the forward part **1302**. Alternatively, a cable can be connected to the forward part **1302** when the rearward part **1304** is removed. The cable can facilitate data transfer, battery charging, etc, depending on the electrical components in the forward part **1302**.

FIG. **3**G is a diagram of a multi-part temple **1310** according to one embodiment of the invention. The multi-part temple **1310** can represent the multi-part temple **1300** shown in FIG. **1** in one embodiment. In FIG. **3**G, a forward part **1312** and a rearward part **1314** are shown disconnected. The forward part **1312** has a mechanical element **1316** and the rearward part **1314** has a corresponding opening **1318**. Once connected together, the mechanical element **1316** of the forward part **1312** is inserted into the opening **1318**, thereby mechanically coupling the rearward part **1314** to the forward part **1312**. Once mechanically coupled the rearward part **1314** is secured to the forward part **1312**, but remains removable.

FIG. **3**H is a diagram of a multi-part temple **1320** according to one embodiment of the invention. The multi-part temple **1320** can represent the multi-part temple **1300** shown in FIG. **1** in one embodiment. In FIG. **3**H, a forward part **1322** and a rearward part **1324** are shown disconnected. The forward part **1322** has a connector **1326** and the rearward part **1324** has a corresponding connector **1328** embedded therein. Once connected together, the connector **1326** of the forward part **1322** is inserted into the corresponding connector **1328**, thereby mechanically coupling the rearward part **1324** to the forward part **1322**. Once mechanically coupled the rearward part **1324** is secured to the forward part **1322**, but remains removable. Additionally, the connection of the connector **1326** and the corresponding connector **1328** can also provide an electrical connection. An electrical connection would serve to enable electrical components in the forward part **1322** (or other parts of an eyeglass frame) to electrically connect to electrical components in the rearward part **1324**. For example, the electrical connection can provide electrical connections for one or more electrical wires. An example of one suitable type of connector is a USB connector which can provide mechanical and electrical connection.

As noted above, a rearward part of a multi-part temple can include one or more electrical components. FIG. **31** is a diagram of a rearward part **1330** of a multi-part temple according to one embodiment of the invention. The rearward part **1330** has a body **1332** with electrical circuitry **1334** internal to the body **1332**. As one example, the electrical circuitry **1334** can pertain to data storage (e.g., memory). In such an example, the rearward part **1330** can be considered a memory stick or a memory card. As other examples, the electrical circuitry **1334** can pertain to a battery/power source, a sun sensor, a pedometer, a media player, a wireless module, etc.

FIG. **3**J is a diagram of a rearward part **1340** of a multi-part temple according to another embodiment of the invention. The rearward part **1340** has a body **1342** with an ear bud **1344** and an ear bud arm **1346** extending therefrom. In addition, the body **1342** includes at least one conductor **1347** and electrical circuitry **1348** internal to the body **1342**. The at least one conductor **1347** can electrically connect the electrical circuitry **1348** with the ear bud **1344**, where the at least one conductor **1347** extends through the ear bud arm **1346** to the ear bud **1344**. Optionally, the body **1342** can further include an antenna **1349** internal to the body **1342**. In the case where the electrical circuitry **1348** includes a wireless receiver (e.g., Bluetooth, XM, FM), the antenna **1349** can enhance reception. As an example, the electrical circuitry **1348**, can be a wireless module for wireless communications or a receiver for XM or FM signals. Additionally or alternatively, the electrical circuitry **1348** can, for example, pertain to one or more of a data storage device, battery/power source, a sun sensor, a pedometer, a media player, etc.

FIG. **3**K is a diagram of a rearward part **1350** of a multi-part temple according to another embodiment of the invention. The rearward part **1330** has a body **1352** with a printed circuit board **1354** internal to the body **1352**. A display device **1356** (e.g., LCD) can be provided on the body **1352**. In one example, the display device **1356** can be mounted to the circuit board **1354** and exposed through an opening in the body **1352** so as to be visible by a user of the eyeglasses using the multi-part temple. Optionally, at least a portion of the printed circuit board **1354** can conform to the shape of the body **1352**. The ability to conform, even partially, allows the printed circuit board **1354** to yield greater surface area within a temple, which tends to be small and stylized. The integrated

circuit board **1354** can have one or more electronic components (e.g., integrated circuits) mounted thereon.

FIGS. **3**L-**3**O are diagrams of representative forward parts for multi-part temples according to different embodiments of the invention. FIG. **3**L is a diagram of an exemplary forward part **1360** having a mechanical element **1362** that includes one or more detents **1364**. When a rearward part is connected to the forward part **1360**, the mechanical element **1362** is inserted into an opening (e.g., opening **1318**) and held securely in place by mechanical forces facilitated by the mechanical element **1362** and the detents **1364**. This can be accomplished through different methods, such as with corresponding protruding portions in the opening that can, for example, be aligned with the detents **1364**. For example, the protruding portions can snap into place or biased by springs (e.g., spring-loaded).

FIG. **3**M is a diagram of an exemplary forward part **1370** having a mechanical element **1372** that includes one or more protrusions **1374**. When a rearward part is connected to the forward part **1370**, the mechanical element **1372** is inserted into an opening (e.g., opening **1318**) and held securely in place by mechanical forces facilitated by the mechanical element **1372** and the protrusions **1374**. In one embodiment, the protrusions **1374** are spring-loaded to facilitate connection with the opening.

FIG. **3**N is a diagram of an exemplary forward part **1380** having a mechanical element **1382** that includes one or more bayonet structures **1384**. To connect a rearward part to the forward part **1380**, the mechanical element **1382** is inserted into an opening (e.g., opening **1318**) that has groves (in the direction substantially parallel to the axis of the mechanical element **1382**) for receiving the bayonet structures **1384**. The rearward part can be connected with the forward part **1380** when the groves within the opening of the rearward part are aligned with the bayonet structures **1384**. Once the mechanical element **1382** is so inserted, the rearward part can be rotated with respect to the forward part **1380**. The rotation causes the bayonet structures **1384** to no longer be aligned with the grooves. As a result, the rearward part is mechanically secured to the forward part **1380** (and thus the eyeglass frame) in a bayonet like manner.

In one embodiment, a connector is used to removably couple the rearward portion to the forward portion of a multi-part temple. For example, the connector can be standard connector. One example of a suitable connector is a Universal Serial Bus (USB) connector.

FIG. **3**O is a diagram of an exemplary forward part **1390** having an electrical connector **1392**. The connector **1392** facilitates mechanical and/or electrical connections between the forward part **1390** and a rearward part. When a rearward part is connected to the forward part **1390**, the connector **1392** is inserted into an opening (e.g., opening **1328**) and held securely in place by mechanical forces. There can be additional mechanical connecting mechanisms to further secure the connection.

In one embodiment, the opening receiving the connector **1392** can include a corresponding (i.e., counterpart) connector. When the connector **1392** is connected with the corresponding connector within the opening, the rearward part is physically secured to the forward part **1390**. For example, mechanical forces can hold the connector **1392** and the corresponding connector in a connected position. In addition, when the connector **1392** and the corresponding counterpart connector are coupled together, one or more electrical connections are facilitated. For example, each connector can be coupled to one or more electrical wires at the other connector so that wires from one part are able to be connected to corresponding wires on the other part. As a result, electrical component(s) in the rearward part are able to be electrically connected with electrical component(s) in the forward part **1390** (or elsewhere in the eyeglass frame). In one implementation, the connectors pertain to or resemble a Universal Serial Bus (USB) type connector.

In another embodiment, the opening receiving the connector **1392** does include a corresponding counterpart connector. In this embodiment, mechanical forces can hold the connector **1392** within the opening. Also, in this embodiment, electrical connections are not facilitated.

Although FIGS. **3**G-**3**N pertain to connections having a male connector at the forward part and a female connector at the rearward part, it should be understood that alternatively the male connector can be at the rearward part and the female connector can be at the forward part.

Also, although FIGS. **3**G-**3**N pertain to connections showing only one elongated portion (like a male connector) to be received by an opening (like a female connector), in other embodiments, there can be more than one elongated portion to be received by more than one opening. Also, the connections can be formed on the sides (i.e., outer surface), instead of by having elongated portions and openings positioned in the middle of (i.e., internal to) the forward and rearward parts. For example, there can be two prongs, one on the top surface and one on the bottom surface of a forward part. Each prong can be received by a counterpart detent in a rearward part, such as the prong on the top surface of the forward part to be received by a detent on the top surface of the rearward part.

In a number of embodiments, the forward part of the multi-part temple is substantially smaller than the rearward part. For example, in FIG. **3**F, the forward part **1302** is substantially smaller than the rearward part **1304**. In one embodiment, a forward part is large enough to house a connection mechanism used to couple with a rearward part and not too much larger. In another embodiment, a forward part and a rearward part are about the same size. In still another embodiment, a forward part is larger than a rearward part.

In one embodiment, neither the forward part nor the rearward part of a multi-part temple contains any electrical components. In such case, the rearward part can still be removable from the forward part. Such an embodiment enables a user to swap one (which can be substantially all of the temple) or both the rearward portions of both temples, with another rearward portion(s), such as for aesthetic, configuration or design reasons.

In one implementation, a connector is used to removably couple the rearward portion to the forward portion of the multi-part temple. For example, the connector can be a Universal Serial Bus (USB) connector.

In one embodiment, a forward part can be part of or integral with a corresponding region of a lens holder. In such case, there need not be any hinges for coupling the temples to the lens holders.

As noted above, connectors can be use to removably attach a temple to an eyeglass frame (e.g., lens holder) or to removably attach different portion(s) of a temple. These connectors can be provided for one or both temples of the eyeglass frames. With such temples being easily removable by users without the need for any special skill or tools, the temple parts can be interchangeable and can be separately sold or leased.

Further, to display various eyewear products, such as in a retail environment, an eyewear products display apparatus (e.g., stand) can include corresponding connectors or connector structures so that (i) separate temples (ii) separate parts of temples and/or (iii) eyeglass frames without temples can be connected to the eyewear products display apparatus for dis-

play. For example, if the eyewear products (e.g., frames, temples, etc.) use connectors, then the eyewear products display apparatus can support those same connectors (e.g., USB connectors) or compatible structures. This eyewear products display apparatus opens up new ways to organize and present eyewear products at retail stores. It also allows users to separately select a base eyewear frame and temples to be used therewith. The temples and the frames can be displayed detached from one another, such that a user can separately select and try different temples with frames.

FIG. **3**P is a diagram of an eyewear products display apparatus **1400** according to one embodiment of the invention. The apparatus **1400** has a first region **1404** of first type connectors (or compatible protrusions) integral with the apparatus **1400**. A plurality of eyeglass frames having second type connectors can be attached and displayed on the apparatus **1400** by connecting one or two of the second type connector of the eyeglass frames to those of the first type connectors of the first region of the apparatus **1400**.

The apparatus **1400** also can include a second region **1402** of second type connectors (or compatible openings) integral with the apparatus **1400**. A plurality of removable temples (and/or removable temple parts) having first type connectors can be attached and displayed on the apparatus **1400** by connecting the first type connectors of the removable temples (and/or removable temple parts) to those of the second type connectors (or compatible openings) in the second region **1402** of the apparatus **1400**.

In one embodiment, the first type connectors are male connectors and the second type connectors are corresponding female connectors which provide a secure mechanical connection. In one embodiment, the first type connectors and/or the second type connectors provided integral with the apparatus **1400** are not electrical connectors but compatible structures (e.g., protrusions and openings) such that a secure mechanical connect can be had.

In one embodiment, the orientation of at least some of the connectors in the apparatus **1400** is substantially horizontal. In other words, for example, when a rearward part of a temple is inserted into such a connector in the apparatus **1400**, the rearward part is substantially perpendicular to the surface of the apparatus **1400** as shown. In another embodiment, the orientation of at least some of the connectors in the apparatus **1400** is substantially facing upward or downward in a vertical manner. In other words, for example, when a rearward part of a temple is inserted into such a connector in the apparatus **1400**, the rearward part is substantially parallel to the surface of the apparatus **1400** as shown. In yet another embodiment, the orientation is at an acute angle relative to the surface of the apparatus **1400** as shown. In other words, for example, when a rearward part of a temple is inserted into a connector in the apparatus **1400**, the rearward part is at an acute angle relative to the surface of the apparatus **1440** as shown. The connectors in the apparatus **1400** can also be rotatable or movable, such as between different positions and/or angles.

Although FIG. **3**P only depicts one side of the eyewear products display apparatus **1400**, the apparatus can have other like sides. For example, the apparatus **1400** can be a one, two, three or four sided apparatus.

In still another embodiment, at least one connector of the apparatus **1400** is connected to at least one electrical component in the apparatus **1400**. For example, when a selected temple part is connected to the connector, the at least one electrical component in the apparatus **1400** is electrically connected to an electrical component in the temple part, and together can perform an electrical operation.

In yet another embodiment, at least one connector of the apparatus **1400** is connected to another connector of the apparatus **1400**. This allows electrical connection between the different eyewear parts connected to the apparatus **1400**. For example, when a selected temple part is connected to the connector and a eyeglass frame is connected to the other connector, an electrical components within the eyeglass frame is electrically connected to an electrical component in the temple part, and together can perform an electrical operation.

FIG. **4** shows examples of different electrical components according to the present invention. Different embodiments of temple arrangements, temple adapters or temple parts according to the invention can use one or more of these different electrical components.

In one embodiment, the electrical component is an electrical connector. The connector can be a male connector or a female connector. Examples of different types of connectors have previously been described in the related patent applications, which have been incorporated by reference.

In one embodiment, the embedded electrical component is an electrical switch, such as one or more of those previously described in the related patent applications, which have been incorporated by reference.

In one embodiment, one electrical component can be a power source. The power source can be a battery, a solar cell or other type of power source.

In one embodiment, one electrical component can include a circuit board. The circuit board can be a rigid or a flexible circuit board.

In one embodiment, one electrical component can be an indicator. The indicator can be audio, visual, or physical (e.g., vibration). For example, the indicator can signal an event or condition to a user of the glasses.

In one embodiment, one electrical component can be a display, such as a LCD display.

In one embodiment, one electrical component can be a speaker. The speaker can provide an audio output for the benefit of the wearer of the glasses. The speaker can directly transmit sound to a user, such as a speaker mounted on an exterior surface of an eyeglass frame, or partially or fully embedded in an eyeglass frame, or a bone conducting type of speaker. Alternatively, the speaker can indirectly transmit sound to a user, such as through the use of a tube to deliver audio output proximate to a user's ear.

In one embodiment, one electrical component can be a controller. The controller can, for example, be a microprocessor.

In one embodiment, one electrical component can be a memory device. The memory device can be non-volatile memory, such as FLASH memory. The data stored in the memory device can be user data or data provided by other electrical components.

In one embodiment, one electrical component is a frequency receiver or a frequency transmitter. They can be in the radio frequency range.

In one embodiment, one electrical component can be a sensor. The sensor can be a temperature sensor. The temperature sensor can be used to sense the temperature of the wearer. In one embodiment, such a temperature sensor is in a temple tip. In measuring the temperature, the user can further press the temple tip towards his head to ensure better connection. One can also put the temple under one's tongue to measure body temperature.

In other different embodiments, one electrical component can be a motion detector, a speed sensor, a rate of ascent (or

descent) detector, a pressure detector, or a detector for radiation, such as an ultraviolet (UV) detector.

In one embodiment, one electrical component is a radio frequency identification (RFID) tag. A RFID tag typically includes a memory chip and a radio antenna. The memory chip usually has a small storage capacity and thus does not include a large amount of information. A portion of such information can provide identifying information for the glasses. The memory chip may only have a few kilobytes, sufficient to encode information, such as a serial number, where and when the product (such as eyeglasses) was manufactured, and other relevant information.

The RFID tags can come in a number of configurations. For example, an active tag uses a battery-powered transponder to constantly emit signals which can carry information programmed into the memory chip. Active tags are more applicable to situations where readers are not close to the tags. A semi-passive tag likewise has a battery, but may not be activated until it receives a signal from a reader. They are more applicable to situations that do not need continuous connection and accessing. A passive tag has no battery; its antenna extracts power from a reader's radio wave signal to transmit the identifying information. Passive tags are typically relatively inexpensive, but may have to be within a few feet of a reader to extract power. The electrical component can be a passive RFID tag, or some other type of tag.

In one embodiment, one electrical component can be for locating the corresponding glasses. For example, the electrical component can produce a beeping tone when it receives a specific radio signal. A handheld device (such as a key chain accessory, can generate the specific radio signal (e.g., when a button is pushed). Through the beeping tone, one can locate the glasses.

As noted above, in one embodiment, the electrical component can be a sensor. More generally, a pair of glasses can include one or more sensors that can be used individually or in combination. FIG. **5** is a chart **500** that depicts examples of sensors suitable for use in or attached to the glasses.

In one embodiment, the sensor is a "being worn" sensor. The "being worn" sensor indicates whether the glasses are being worn by its user. The "being worn" operation can be performed using, for example, a thermal sensor, a motion detector, a stress sensor or a switch.

In one embodiment, a motion detector is used as a "being worn" sensor. A threshold can be set, such that if the amount of motion exceeds the threshold, the glasses are assumed to be worn. The motion detector can, for example, be achieved by a mechanical mechanism or an accelerometer.

In another embodiment, the "being worn" sensor includes two thermal sensors. One sensor can be at approximately the middle of a temple, such as in a region that touches the head of the user wearing the glasses. The other sensor can be at one end of the temple, the end that is close to its hinge. If the temperature differential between the two sensors is beyond a certain preset value, the glasses would be assumed to be worn. The differential is presumed to be caused by a person wearing the pair of glasses.

In yet another embodiment, the "being worn" sensor includes a stress sensor at the hinge of the temple. The assumption is that when the eyewear is worn, the hinge is typically slightly stretched because typically, the width of the head of the user is slightly wider than the width between the temples when the two temples are in the extended positions. If the value of the stress sensor is beyond a certain preset value, the glasses would be assumed to be worn.

In a further embodiment, the "being worn" sensor can be a switch. For example, at the hinge between a temple and its corresponding lens holder, there is a switch. When that temple is in its extended position, i.e., fully extended outwards, the switch is turned on. The switch can be a pin-type switch. When the temple is fully extended outwards, the pin is pressed. When both temples are fully extended outwards, in one embodiment, the glasses would be assumed to be worn by the user.

In one embodiment, another type of sensor is an environmental sensor. The environmental sensor can sense environmental conditions, such as one or more of radiation (e.g., ultraviolet radiation or light), temperature (e.g., ambient temperature), pressure, humidity and toxins (e.g., chemicals, etc.).

In another embodiment, another type of sensor is a condition sensor. The condition sensor can sense the conditions of the user of the glasses. Examples of condition sensors include sensing one or more of distance traveled, location, speed, calories consumed, temperature and vital signs associated with the user of the glasses. The distance traveled could represent the horizontal distance traveled or the vertical distance (i.e., elevation) traveled. The speed can be the rate of movement along the horizontal distance traveled and/or the vertical distance. In yet another embodiment, the condition sensor can indirectly sense emotional conditions of the user of the glasses.

The sensors can be provided in a redundant or fault-tolerant manner. For example, sensors can come in pairs in the glasses. When one malfunctions, the other one will take over its operation. In another embodiment, the sensor information can be processed in a differential manner to examine changes to the sensor information. The differential can be based on time. The sensors can be powered by a battery, solar energy, or kinetic energy. For reduced power consumption, the sensors can remain in a low-power state unless data is being acquired by the sensors. In yet another embodiment, two or more of the sensors can communicate with one another (wired or wirelessly) to exchange data or control information.

FIG. **6** illustrates a diagram of a number of different embodiments of temple adapters **600** according to the invention. The temple adapters **600** serve to adapt a temple (i.e., a temple body or temple tip) of a pair of eyeglasses to provide for at least one electrical component. In one embodiment, a temple adapter can clip onto a temple body or a temple tip. In another embodiment, a temple adapter can mount to a post provided on a temple body or a temple tip. In still another embodiment, a temple adapter can mount to a hole provided in a temple body or a temple tip. In yet another embodiment, a temple adapter can be bonded (or adhered) to a temple body or a temple tip.

The temple adapter is particularly well suited to adapt a pair of eyeglasses with communication components, such as a speaker and/or a microphone. As an example, a standard pair of eyeglasses can be transformed into an operational headset by attaching a temple adapter to a temple body or temple tip of the pair of eyeglasses, wherein the temple adapter includes at least one speaker and at least one microphone.

The temple adapter can be rigid or malleable. The benefit of being malleable is that the particular geometric arrangement/assembly of the temple adapter can be altered by its user for better user comfort or operation.

In one embodiment, the temple adapter is a structure that has at least one electrical component attached thereto or at least partially embedded therein. In another embodiment, all of the electrical components to be provided with the temple adapter are at least partially embedded in the temple adapter.

FIG. 7A is a diagram of a temple adapter **700** according to one embodiment of the invention. The temple adapter **700** attaches to a temple **702** (including any temple tip using a clip **704**. The clip **704** can use force, such as an interference fit force or spring-induced force, to attach the temple adapter **700** to the temple **702**. Besides the clip **704**, the temple adapter **700** includes an angled arm **706** and an ear bud **708**. The angled arm **706** can be malleable. When a pair of eyeglasses associated with the temple **702** is being worn by a user, the ear bud **708** can be placed in or near the user's ear canal. The ear bud **708** contains a speaker and receives electrical signals via a wire, such wire can be provided internal or external to the temple adapter **700** and can originate at the temple **702** or external to the temple **702**.

FIG. 7B is a diagram of a temple adapter **720** according to another embodiment of the invention. The temple adapter **720** attaches to a temple **722** (including any temple tip) using a clip **724**. The clip **724** can use force, such as an interference fit force or spring-induced force, to hold the temple adapter **720** to the temple **722**. Besides the clip **724**, the temple adapter **720** includes an angled arm **726**, an ear bud **728**, a microphone **730**, an extension arm **732** and a cord **734**. In this embodiment, the cord **734** includes a wire that connects to the speaker within the ear bud **728** and another wire that connects to the microphone **730**. There can be one or more conductors inside a given wire. For example, a wire might have one conductor serving as a signal line and another conductor serving as ground. Such wires can be provided internal to the extension arm **732** and the angled arm **726**. The arm **732** can serve to guide the cord **734** away from the user's ear or rearward. The angled arm **726** can be malleable. The placement or position of the microphone **730** can vary with implementation. As shown in FIG. 7B, the microphone **730** is directed forward to a user's front when a pair of eyeglasses associated with the temple **722** are being worn. Alternatively, the microphone **730** could be directed outward away from the user's head when the pair of eyeglasses are being worn. When a pair of eyeglasses associated with the temple **722** is being worn by a user, the ear bud **728** can be placed in or near the user's ear canal. The ear bud **728** contains a speaker and receives electrical signals via a wire of the cord **734**. The cord **734** can have another end (not shown) with a connector for coupling with an audio output device (e.g., radio, MP3 player) or a communication device (e.g., mobile phone).

FIGS. **8**A and **8**B are diagrams of a temple adapter **800** according to another embodiment of the invention. FIG. **8**A is a side view of the temple adapter **800**, and FIG. **8**B is a front view of the temple adapter **800**. The temple adapter **800** has a support body **802** which has a support arm **803**. An ear bud **804** is attached to an end of the support arm **803**. A connector **806**, such as a male audio connector, is attached to one end of the support body **802**. A microphone **808** can be optionally provided and attached to the support body **802** or the support arm **803**. Additionally, an elastic member **810** can be provided to facilitate attachment of the support body **802** to a temple **812** of a pair of eyeglasses. The temple **812** can have a tip region **814**, which can be referred to as a temple tip. When the temple adapter **800** is attached to the tip region **814** of the temple **812**, the tip region **814** is placed in or through an opening **816** in the elastic member **810**, as shown, for example, in FIG. **8**B. The temple adapter **800** is thereby held in place relative to the tip region **814**. Additionally, although not shown, the support body **802** would carry a first internal wire from the connector **806** to the microphone **808**, and the support body **802** and the support arm **803** would carry a second internal wire from the connector **806** to the ear bud **804**.

FIG. **9**A is a diagram of a temple adapter **900** according to another embodiment of the invention. In FIG. **9**A, a side-view of the temple adapter **900** is depicted. The temple adapter **900** attaches to a temple **902** of a pair of eyeglasses. The temple **902** can have a tip region **904**, which can be referred to as a temple tip. The temple adapter **900** has a support member **906**. A first end **908** of the support member **906** couples to the temple **902** of a pair of eyeglasses. In one embodiment, the first end **908** serves to attach the temple adapter **900** to the temple **902**. For example, the first end **908** can provide a clip, clamp, post, or hole to provide or assist with the attachment. As another example, the first end **908** can alternatively or additionally use an adhesive, bonding or fastener (e.g., hook and loop system, such as Velcro) to provide or assist with the attachment. A second end **910** of the support member **906** provides an opening through which an arm **912** extends. One end of the arm **912** has an ear bud **914** attached thereto. The arm **912** can be angled and/or malleable. When a pair of eyeglasses associated with the temple **902** is being worn by a user, the ear bud **914** can be placed in or near the user's ear canal. The ear bud **914** contains a speaker and receives electrical signals via a wire, such wire can be provided internal or external to the temple adapter **900** and can originate at the temple **902** or external to the temple **902**.

FIGS. **9**B and **9**C are diagrams of a temple adapter **920** according to still another embodiment of the invention. FIG. **9**B is a side view of the temple adapter **920**, and FIG. **9**C is a front view of the temple adapter **920**. The temple adapter **920** attaches to a temple **922** of a pair of eyeglasses. The temple **922** can have a tip region **924**, which can be referred to as a temple tip. The temple adapter **920** has a support member **926**. A first end **928** of the support member **926** couples to the temple **922** of a pair of eyeglasses. In one embodiment, the first end **928** serves to attach the temple adapter **920** to the temple **922**. For example, the first end **928** can provide a clip, clamp, post, or hole to provide or assist with the attachment. As another example, the first end **928** can alternatively or additionally use an adhesive, bonding or fastener (e.g., hook and loop system, e.g., Velcro) to provide or assist with the attachment. The first end **928** also has a bracket **930** having a connector **932** at one end, and an elastic member **934** for coupling about the tip region **924**. The connector **932**, such as a male audio connector, is attached to one end of the bracket **930**. A microphone **936** can be optionally provided and, for example, attached to the support body **926**.

A second end **938** of the support member **926** provides an opening through which an arm **940** extends. One end of the arm **940** has an ear bud **942** attached thereto. The arm **940** can be angled and/or malleable. The arm **940** is also re-positionable within the opening at the second end **938** so as to permit user adjustment. When a pair of eyeglasses associated with the temple **922** is being worn by a user, the ear bud **942** can be placed in or near the user's ear canal. The ear bud **942** contains a speaker and receives electrical signals via a wire, such wire can be provided internal or external to the temple adapter **920** and can originate at the temple **902** or external to the temple **902**. In this embodiment, a wire **944** is shown as passing through the arm **940** to provide signals to the speaker within the ear bud **942**. More particularly, in one embodiment, although not shown in FIGS. **9**B and **9**C, a first wire would connect the speaker within the ear bud **942** to the connector **932** (e.g., wire **944**), and a second wire would connect the microphone **936** to the connector **932**. Such wires can be internal or external, or partially internal and partially external, to the temple adapter **920**.

FIG. **9**D is a diagram of a temple adapter **960** according to still another embodiment of the invention. In FIG. **9**D, a

side-view of the temple adapter **960** is depicted. The temple adapter **960** attaches to a temple **962** of a pair of eyeglasses. The temple **962** can have a tip region **964**, which can be referred to as a temple tip. The temple adapter **900** has a support member **966**. A first end **968** of the support member **966** couples to the temple **962** of a pair of eyeglasses. In one embodiment, the first end **968** serves to attach the temple adapter **960** to the temple **962**. For example, the first end **968** can provide a clip, clamp, post, or hole to provide or assist with the attachment. As another example, the first end **968** can alternatively or additionally use an adhesive, bonding or fastener (e.g., hook and loop system, e.g., Velcro) to provide or assist with the attachment. A second end **970** of the support member **906** provides an opening through which an arm **972** extends. One end of the arm **972** has an ear bud **974** attached thereto. The arm **972** can be angled and/or malleable. When a pair of eyeglasses associated with the temple **962** is being worn by a user, the ear bud **974** can be placed in or near the user's ear canal. The ear bud **974** contains a speaker and receives electrical signals via a wire, such wire can be provided internal or external to the temple adapter **960** and can originate at the temple **962** or external to the temple **962**. Further, the temple adapter **960** can include a microphone **976**. In this embodiment, the microphone **976** is attached to the support member **966**. In addition, an arm **978** is used to support an end of a cable **980** that is coupled to the arm **978**. The cable **980** can include at least one wire for the microphone **976** and one wire for the speaker within the ear bud **974**.

To the extent that any of the embodiments of the temple adapters discussed above use a microphone, a tube can be optionally attached to the microphone to facilitate voice pick-up of the user. One end of the tube can be placed over the microphone, and the other end of the tube is then positioned closer to the user's mouth than is the microphone. With a temple adapter on both temples, each providing a microphone and speaker to a pair of eyeglasses, only one temple adapter would typically make use of such a tube. Alternatively, the tube and the microphone could be replaced by a boom microphone.

FIGS. **10**A-**10**C are diagrams of a temple having a bone conducting element according to still other embodiments of the invention. The bone conducting elements can replace a traditional speaker to provide audio output to a user. Although not shown, electrical signals would be internally or externally supplied to the bone conducting element.

FIG. **10**A illustrates a temple **1000** for a pair of eyeglasses. The temple **1000** includes a bone conducting element **1002** that can provide audio sound to a user by coupling vibrations to at least one bone of the user's face. The bone conducting element **1002** is held relative to the temple **1000** by an arm **1004**. Hence, in this embodiment, the temple **1000**, the arm **1004** and the bone conducting element **1002** can all be integrally formed.

FIG. **10**B illustrates a temple **1020** for a pair of eyeglasses. The temple **1020** includes a bone conducting element **1022** that can provide audio sound to a user by coupling vibrations to at least one bone of the user's face. The bone conducting element **1022** is held relative to the temple **1020** by a support **1024** that removably attaches to the temple **1020**.

FIG. **10**C illustrates a temple **1040** for a pair of eyeglasses. The temple **1040** includes a bone conducting element **1042** that can provide audio sound to a user by coupling vibrations to at least one bone of the user's head. In this embodiment, the bone conducting element **1042** is positioned in the vicinity of the user's ear, such as behind the user's ear. The placement of the bone conducting element **1042** in this embodiment can reduce impact to the design of the eyeglasses.

In one embodiment, the electrical components associated with a temple arrangement, a temple adapter or a removable temple part is for enhancing the hearing of the person wearing the corresponding pair of glasses. There can be at least a microphone and a speaker in a temple arrangement, a temple adapter or removable temple part. The microphone can be close to an ear of the user when the glasses are worn by the user, and can be a directional microphone. The microphones can be a microphone in a temple adapter, such as the microphone **730** in FIG. **7**B, **808** in FIG. **8**A, **936** in FIG. **9**B, or **976** in FIG. **9**D. The microphones can be in a temple arrangement. The microphone in a temple arrangement can be attached to a temple tip, a temple fit-over or a temple cover. The microphones can be positioned to be in front of the user's ears so that the microphones will not be affected by the shadowing effect of the ears. The speaker can be inserted into the ear, as in some of the speakers previously described.

In another embodiment, there are two sets of microphones and speakers, such as in two temple arrangements, temple adapters or removable temple part. In the vicinity of each ear, there is a temple arrangement, temple adapter or removable temple part with its corresponding microphone and speaker. The microphones again can be directional, one pointing generally outwards in a position close to the left ear, and one pointing generally outwards in a position close to the right ear. Alternatively, the microphones can point forward.

The microphone and the speaker close to an ear do not have to be in very close proximity to each other, as in many hearing aids existing nowadays. They can be spaced apart by, such as, one to several inches, with the microphone being directional and pointing to the front and to either the left or the right of the user, and with the speaker pointing toward or inserted into the corresponding ear of the user. Such a distance apart can significantly reduce feedback effect of existing hearing aids. Another advantage of such a hearing enhancement device is that users may not need to be fitted into ears with ear molds. In any case, additional details on hearing enhancement are further described in the related applications that have been incorporated herein by reference, such as U.S. Provisional Patent Application No. 60/620,238, filed Oct. 18, 2004, and entitled "EYEGLASSES WITH HEARING ENHANCED AND OTHER AUDIO SIGNAL-GENERATING CAPABILITIES."

The various embodiments of the invention noted above, whether temple arrangement, temple adapter or removable temple part, can have a cable or cord attached or attachable thereto. The cable or cord has one or more conductors. The cable or cord can serve to provide electrical signals to or receive electrical signals from the temple arrangement, the temple adapter or removable temple part. In one embodiment, one end of a cable or cord attaches to a temple arrangement, temple adapter or removable temple part (either permanently or via a connector) and the other end of the cable or cord attaches (either permanently or via a connector) to an electronic device. As an example, the electronic device can be an audio output device (e.g., audio player) or a communication device (e.g., mobile telephone). In a first example, the cable or cord could provide a male audio (stereo) connector at one end, and a pair of female audio connectors at the opposite end, each being for use with a different temple. In a second example, the cable or cord could provide a set of connectors, such as a male mini-phone connector (2.5 mm) and a male audio (stereo) connector, at one end, and one or a pair of female phone connectors at the opposite end.

In one embodiment, the cable or cord can also have a switch coupled thereto so as to permit a user to switch modes. For example, if the temple arrangement, temple adapter or removable temple part provides a speaker and microphone to a pair of eyeglasses, a switch on a cable or cord that connects the temple arrangement or temple adapter to an electronic device could provide different switch positions for different electronic devices or different functional modes of operation of a single electronic device. As an example, if the electronic device is (or operates as) an audio player, a first switch position could be used. Alternatively, if the electronic device is (or operates as) a mobile telephone, a second switch position could be used. Additional discussion of suitable cables and cords is provided in the related applications that have been incorporated herein by reference.

Electrical components can form an electronic module. The electronic module can provide radiation monitoring, wireless communication, enhanced hearing, etc. A radiation monitoring system can be partially or fully contained in a temple arrangement, temple adapter or removable temple part associated with a temple of a pair of glasses. Typically, the temple arrangement or temple adapter can be removable from the temple. The removable temple part is obviously removable from a corresponding remaining temple part.

In another embodiment, an electronic component in a temple arrangement, temple adapter or removable temple part interacts with another electronic component in another part (e.g., frame) of the glasses or in a device tethered to the glasses. For example, a temple of a pair of glasses holds one portion of an electronic circuit. That portion can include generic parts, such as a battery, that are applicable to different applications. Another portion of the electronic circuit is in a temple arrangement, temple adapter or removable temple part. This portion can be application specific, such as an electronic clock without a battery, or a temperature sensor.

In yet another embodiment, the electrical components can provide audio player capabilities. In such an embodiment, the electrical components can include audio file storage, an audio player and a battery. The electrical components may or may not include wireless communication circuitry.

Further, in an alternative embodiment, the output of an operation indicator can be audio. The audio output can be from one or more speakers associated with the frame of the eyeglasses. Such audio output can signal the user using natural language, voice synthesis, pre-recorded messages, etc.

In another embodiment, the electrical components can include a memory module. The memory module provides non-volatile data storage. For example, the memory module can be a portable (or removable) memory device (e.g., memory card). The memory module can, for example, store sensor information (which can be over an extended period of time). Such memory module can be remotely interrogated using wireless communication circuitry, or can be accessed through a wired connection with a tethered device.

In one embodiment, the electrical connection(s) can alternatively be used to allow information stored in the electrical components to be accessed or queried by a device. For example, when the electrical components include a memory module, the memory module can be accessed to read data (e.g., status information) stored therein.

As previously noted, the electrical components associated with a temple arrangement, a temple adapter and/or removable temple part can pertain to radiation monitoring circuitry. In such case, the electrical components within the temple arrangement, temple adapter or removable temple part alone or together with eyeglass electrical components can implement a radiation monitoring system. The radiation being monitored can, for example, pertain to one or more of UV, infrared and gamma radiation. In one embodiment, sunlight is considered as a type of radiation. In any case, additional details on radiation monitoring are further described in the related applications that have been incorporated herein by reference.

Also, the electrical components can pertain to health or fitness monitoring circuitry. In such case, the electrical components within the temple arrangement, the temple adapter removable temple part alone or together with eyeglass electrical components can implement a health or fitness monitoring system. Additional details on health or fitness monitoring are further described in the related applications that have been incorporated herein by reference.

In yet another embodiment, an electronic component in a temple arrangement, a temple adapter or removable temple part of a frame of eyeglasses interacts with an electronic component of an apparatus tethered to the eyeglasses to perform an operation. For example, a temple arrangement, a temple adapter removable temple part of a pair of eyeglasses holds one portion of an electronic system, and a tethered apparatus that tethers to the pair of eyeglasses includes another portion of the electronic system.

Still further, the invention can provide a new approach to marketing accessories, namely, electrical accessories, for eyewear. According to one method for providing temple arrangements, temple adapters and/or removable temple part for use with a pair of glasses, the method can initially provide a plurality of temple arrangements, temple adapters and/or removable temple part for a customer. This enables the customer to browse and select at least one temple arrangement, temple adapter or removable temple part. Each of the temple arrangements, temple adapters or removable temple part can have one or more electrical components at least partially embedded therein, with different temple arrangements, temple adapters or removable temple parts providing different electrical capabilities. Once a temple arrangement, temple adapter or removable temple part has been selected, the selected temple arrangement, temple adapter or removable temple part can be coupled to one of the corresponding temples of the eyewear (e.g., a pair of glasses). In the case where the selected temple arrangement is a temple tip, the selected temple tip is inserted onto (e.g., slid over) an end of the corresponding temple (after removing any previously installed temple tip if there was one). In the case where the selected temple adapter is to be coupled, the selected temple adapter can be attached to the corresponding temple. In the case where the selected removable temple part is to be coupled, the selected removable temple part can be attached to a remaining part (e.g., forward part) of the corresponding temple. Thereafter, the customer can make use of the eyewear with its associated electrical capabilities provided by the temple arrangement, temple adapters or removable temple part.

In one embodiment, once a temple arrangement, a temple adapter and/or removable temple part is provided to a customer, the customer can test the electrical capabilities of the pair of glasses. If the customer does not like the current selected temple arrangement, temple adapter or removable temple part, the customer can repeat the process by selecting and testing another temple arrangement, temple adapter or removable temple part. Before providing the eyewear with the temple arrangement, temple adapter or removable temple part, the customer can be required to pay a purchase (or rental) price for at least the temple arrangement, temple adapter or removable temple part. Thereafter, the customer can be permitted to return and replace the temple arrangement, temple

adapter or removable temple part with another temple arrangement, temple adapter or removable temple part. Such returns or replacements can be available only for a limited period of time following their purchase.

Yet still another aspect of the invention relates to eyewear having an extended endpiece so as to facilitate placement of one or more electrical components at the extended endpiece. The one or more electrical components can operate independently or together with other electrical components provided elsewhere. For example, other electrical components can be provided in other regions of the frame for the eyewear. In one particular example, the other electrical components can be located in a bridge area of the frame for the eyewear. In such an example, given that the endpiece is extended, the one or more electrical components can be placed at the endpiece and thereby communicate with other electrical components in a front area (e.g., bridge region) or the other endpiece without having to communicate through a hinge or connector.

FIG. **11**A illustrates a pair of glasses **1100** according to one embodiment of the invention. The pair of glasses **1100** include a first lens holder **1102** and a second lens holder **1104**. The lens holders **1102** and **1104** are capable of receiving lens. The lens can be prescription lens or non-prescription lens. The first lens holder **1102** has a first side and a second side. The second lens holder **1104** has a first side and a second side. The pair of glasses **1100** also has a bridge **1106**. The bridge **1106** is coupled to the second side of the first lens holder **1102** and the first side of the second lens holder **1104**. The lens holders **1102** and **1104** and the bridge **1106** can be separate pieces or a single integral piece. The glasses **1100** can also be referred to as eyeglasses.

The pair of glasses **1100** also includes a first extended endpiece **1112** and a second extended endpiece **1113**. In addition, the pair of glasses **1100** includes a pair of temples, namely, a first temple **1108** and a second temple **1110**. The first extended endpiece **1112** connects to the first temple **1108** via a joint (or hinge) **1114**. The second extended endpiece **1113** connects to the second temple **1110** via a joint (or hinge) **1115**. The extended endpiece **1112** and **1113** are enlarged as compared to conventional endpieces. As a result, the respective joints (or hinges) **1114** and **1115** are set back from the respective lens holders **1102** and **1104**. For example, in one embodiment, the hinge **1115** is set back from the lens holder **1104** by between about 1-5 centimeters. One advantage of utilizing enlarged endpieces **1112** and **1113** as illustrated in FIG. **11**A is that electrical components **1116** are able to the comfortably be provided in the extended endpieces **1112** and **1113**. Moreover, another advantage is that the electrical components **1116** within the extended endpiece **1113** can electrically coupled to other electrical components provided within the forward portion of the frame without having to electrically connect through a joint or hinge. As illustrated in FIG. **11**A, the extended endpiece **1113** provides electrical components **1116** at an inner surface of the extended endpiece **1113**. The electrical components **1116**, in this example, include a display **1118** and a plurality of switches **1120** (e.g., buttons). As an example, the electrical components **1116** can, for example, implement an electrical system (e.g., pedometer system, UV monitoring system, physical condition monitoring system, etc.). However, in the embodiment of the glasses **1100** illustrated in FIG. **11**A, the electrical components **1116** are provided in the extended endpiece **1113**.

FIG. **11**B illustrates the pair of glasses **1100** according to another embodiment of the invention. More particularly, FIG. **11**B illustrates the pair of glasses **1100** illustrated in FIG. **11**A where the electrical components **1116** are provided as a module **1122** internal to the extended endpiece **1113**. The module **1122** includes a plurality of interconnected electrical components, including the display **1118** and the switches **1120**. In addition, the glasses **1100** further include a separate electrical component **1124**. As illustrated in FIG. **11**B, the separate electrical component **1124** can be provided at the bridge **1106**. Still further, a conductive element (e.g., a wire) that electrically connects the module **1122** with the separate electrical component **1124** can be provided internal to the eyeglass frame, namely, internal to the lens holder of **1104**. The nature of the separate electrical component **1124** can vary depending upon application. In the case in which the module **1122** pertains to a pedometer system, the separate electrical component **1124** can pertain to a sensor used to measure heart rate of the user of the glasses **1100**. For additional details on a sensor utilized in this context, see U.S. Provisional Patent Application No. 60/787,850, filed Apr. 1, 2006, and entitled "EYEGLASSES WITH HEART RATE MONITOR," which is hereby incorporated herein by reference. Although not illustrated in FIG. **11** B, the extended end piece **1113** can also include a cavity (or opening) and a cover. The module **1122** can be inserted or removed from the cavity by way of the cover.

FIGS. **12**A-**12**E illustrate a side view of eyeglass frames having an extended temples according to several embodiment of the invention. In FIG. **12**A, a side view of a eyeglass frame **1200** includes a lens holder **1202**, an extended endpiece **1204** and a temple **1206**. The extended endpiece **1204** includes one or more electrical components **1208** partially or completely internal to the extended endpiece **1204**. In this embodiment, the manner by which the temple **1206** connects to the extended endpiece **1204** is not depicted. Hence, the temple **1206** can be integral with the extended endpiece **1200**, can be permanently coupled to the extended endpiece **1204**, or can be removably coupled to the extended endpiece **1204**.

The side view of an eyeglass frame **1220** illustrated in FIG. **12**B is similar to the eyeglass frame **1200** illustrated in FIG. **12**A. However, in this embodiment, the temple **1206** is coupled to the extended endpiece **1204** by way of a joint (or hinge) **1210**. FIG. **12**C illustrates the eyeglass frame **1220** with the temple **1206** being substantially closed with respect to the eyeglass frame **1220**. As noted in FIG. **12**C, the temple **1206** can rotate with respect to the extended endpiece **1204** by way of the joint (or hinge) **1210**. In this embodiment, the temple **1206** is able to be rotated as in conventional eyewear such that (i) the temples can be closed when not being worn to facilitate storage or (ii) the temples can be extended to an open position so that the eyeglasses can be worn. While retaining the traditional notion of the folding temples, the eyeglass frame **1220** causes the joint **1210** to be set back from the lens holder **1202** so that the endpiece is extended, which can facilitate including one or more electoral components within the endpiece.

The side view of an eyeglass frame **1230** illustrated in FIG. **12**D is similar to the eyeglass frame **1200** illustrated in FIG. **12**A. However, in this embodiment, the temple **1206** is coupled to the extended endpiece **1204** by a linking temple piece **1232**. The linking temple piece **1232** couples to the extended endpiece **1204** by way of a joint (or hinge) **1234**. The joint **1234** allows the linking temple piece **1232** to rotate with respect to the extended endpiece **1204**. In addition, the linking temple piece **1232** includes a connector **1236** that is capable of receiving a corresponding connector **1238** associated with the temple **1206**. In this embodiment, the temple **1206** couples to the linking temple piece **1232** using the connectors **1236** and **1238** which provide physical connection (and optionally also electrical connection). The linking temple piece **1232** in-turn can couple to the extended end-

piece **1204** by way of the joint (or hinge) **1234**. The temple **1206** is thus easily removable from the linking temple piece **1232** of the eyeglass frame **300**.

The side view of an eyeglass frame **1240** illustrated in FIG. **12**E is similar to the eyeglass frame **1200** illustrated in FIG. **12**A. However, in this embodiment, the extended endpiece **1204** includes a first connector **1242**, and the temple **1206** includes a corresponding connector **1244**. Here, the temple **1206** can be removably connected to the extended endpiece **1204** by way of the connectors **1242** and **1244**.

According to still another embodiment of the invention, temples for eyeglass frames can be not only removable but also piecewise replaceable. In other words, an entire temple can be removed and replaced with respect to an eyeglass frame. In another implementation, a portion of a temple can be removed and replaced with another portion. Allowing temples of eyeglass frames to be removed and replaced facilitates incorporating different electronic modules that are internal to the temples (or temple portions) to the changed. Also, the different temple portions can have different design appearances that allow the design of the eyeglasses, namely the temples, to be altered as desired by a user. In other words, the temples or temple portions can be swappable.

FIG. **13**A illustrates a temple **1400** having multiple parts according to one embodiment of the invention. The temple **1400** includes a temple base **1402** that couples to a forward portion **1404** of an eyeglass frame. The forward portion **1404** can, for example, pertain to an endpiece or a forward portion of a temple. In addition, the temple **1400** includes a temple tip **1406** (or rearward portion). One end of the temple base **1302** can connect to the forward portion **1404** and the other end of the temple base can connect to the temple tip **1406**. As a result, the temple base **1402** and the temple tip **1406** can be replaced (individually or in combination) with other temple bases and temple tips. For example, the temple base **1402** and/or the temple tip **1406** could be removed and replaced with another temple base and/or temple tip having a different functional capability or a different ornamental appearance.

FIG. **13**B illustrates a portion of an eyeglass frame **1420** according to one embodiment of the invention. The portion of the eyeglass frame **1420** is similar to the portion of the eyeglass frames **1200** illustrated in FIG. **12**A. The difference is that the temple **1206** now explicitly illustrates a temple base **1422** and a temple tip **1424**. The temple base **1422** and a temple tip **1424** can be removed and replaced (individually or in combination) with respect to the eyeglass frame, namely, the extended endpiece **1204**.

FIG. **13**C illustrates a portion of an eyeglass frame **1340** according to another embodiment of the invention. The portion of the eyeglass frame **1440** is similar to the portion of the eyeglass frame **1200** illustrated in FIG. **12**A. However, in FIG. **13**C, the portion of the eyeglass frame **1440** includes a temple insert **1442**. The temple insert **1442** can include one or more electrical components **1444** internal to the temple insert **1442**. As illustrated in FIG. **13**C, the temple insert **1442** can be provided between the extended endpiece **1204** and the temple **1206**. Although not shown in FIG. **13**C, the connection between the temple insert **1442** and the extended endpiece **1204** or the temple **1206** can be through use of a joint (or hinge) or by way of connectors as discussed above. In this embodiment, the temple insert **1442** can provide electrical components that can interact with the electrical components **1208** within the extended endpiece **1200** or elsewhere within the eyeglass frame. Hence, a user can optionally include the temple insert **1442** between the temple **1206** and the extended endpiece **1204** to provide additional functionality to the eyeglasses. Then, when the additional functionalities not desired, the temple insert **1442** can be removed from the temple configuration.

The various aspects, embodiments, implementations and features of the invention noted above can be combined in various ways or used separately. Those skilled in the art will understand from the description that the invention can be equally applied to or used in other various different settings with respect to various combinations, aspects, embodiments, implementations or features provided in the description herein.

Certain aspects of the invention can be implemented in software, hardware or a combination of hardware and software. Certain aspects of the invention can also be embodied as computer readable code on a computer readable medium. The computer readable medium is any data storage device that can store data which can thereafter be read by a computer system. Examples of the computer readable medium include read-only memory, random-access memory, CD-ROMs, magnetic tape, optical data storage devices, and carrier waves. The computer readable medium can also be distributed over network-coupled computer systems so that the computer readable code is stored and executed in a distributed fashion.

The advantages of the invention are numerous. Different embodiments or implementations may yield one or more of the following advantages. One advantage of the invention is that electrical components can be provided integral with or attached to a temple arrangement, a temple adapter or a removable temple part for use with a pair of eyeglasses. Another advantage of the invention is that after-market changes to electrical capabilities of eyeglasses can be relatively easily achieved Another advantage of the invention is that communication, computation, information capturing or sensing, and/or operational capabilities can be provided for eyeglasses without substantial interference to style or design choices of the glasses. Still another advantage of the invention is that wireless communications, radiation monitoring, fitness monitoring and/or health monitoring can be supported by the electrical components. Yet another advantage of the invention is the ability to provide hands-free wireless communications capability.

Numerous specific details are set forth in order to provide a thorough understanding of the present invention. However, it will become obvious to those skilled in the art that the invention may be practiced without these specific details. The description and representation herein are the common meanings used by those experienced or skilled in the art to most effectively convey the substance of their work to others skilled in the art. In other instances, well-known methods, procedures, components, and circuitry have not been described in detail to avoid unnecessarily obscuring aspects of the present invention.

In the foregoing description, reference to "one embodiment" or "an embodiment" means that a particular feature, structure, or characteristic described in connection with the embodiment can be included in at least one embodiment of the invention. The appearances of the phrase "in one embodiment" in various places in the specification are not necessarily all referring to the same embodiment, nor are separate or alternative embodiments mutually exclusive of other embodiments. Further, the order of blocks in process flowcharts or diagrams representing one or more embodiments of the invention do not inherently indicate any particular order nor imply any limitations in the invention.

Many features and advantages of the present invention are apparent from the written description. Since numerous modi-

fications and changes will readily occur to those skilled in the art, it is not desired to limit the invention to the exact construction and operation as illustrated and described. Hence, all suitable modifications and equivalents may be resorted to as falling within the scope of the invention.

What is claimed is:

1. A pair of glasses comprising:

a first lens holder for receiving a first lens, the first lens holder having a first side and a second side;

a second lens holder for receiving a second lens, the second lens holder having a first side and a second side;

a bridge element coupling the first side of the first lens holder to the second side of the second lens holder;

a first temple having a first end and a second end, with the first end secured to the second side of the first lens holder; and

a second temple having a first end and a second end, with the first end secured to the first side of the second lens holder,

wherein the first temple is a multi-part temple having a first part and a second part, with the first part closer to the corresponding lens holder than the second part, the second part of the first temple being removably coupled to the first part of the first temple,

wherein at least one electrical component is at least partially embedded in the second part of the first temple, and

wherein at least one other electrical component is at least partially embedded in the first part of the first temple and operatively interconnected with the electrical component that is at least partially embedded in the second part of the first temple to perform an electrical function.

2. A pair of glasses as recited in claim **1**, wherein the first part of the first temple includes a plurality of the other electrical components that are operatively Interconnected with the electrical component that is at least partially embedded in the second part of the first temple.

3. A pair of glasses as recited in claim **1**, wherein the electrical component is selected from the group of: a data storage device, a battery, a sensor, a pedometer, a hearing enhancement device and a media player.

4. A pair of glasses as recited in claim **1**,

wherein the electrical component is a sensor, and

wherein the sensor is selected from the group of: a motion detector, a pressure detector, a radiation detector and a temperature sensor.

5. A pair of glasses as recited in claim **1**, wherein the second part of the first temple is designed so that it can be removed or attached to the first part of the first temple by a wearer of said pair of glasses.

6. A pair of glasses as recited in claim **1**, wherein the electrical component comprises an electronic device, and wherein the other electrical component comprises an electronic device.

7. A pair of glasses as recited in claim **1**,

wherein the pair of glasses further comprises a connector, the connector supporting mechanical and electrical coupling between the first part and the second part of the first temple, and

wherein the second part of me first temple is configured to be removably coupled to the first part of the first temple using the connector.

8. A pair of glasses as recited in claim **7**, wherein when the second part of the first temple is removably coupled to the first part of the first temple using the connector, the other electrical component at least partially embedded in the first part of the first temple is electrically interconnected with the electrical component that is at least partially embedded in the second part of the first temple.

9. A pair of glasses as recited in claim **8**, wherein the connector is a USB connector.

10. A pair of glasses as recited in claim **7**, wherein the connector is integral with the second part of the first temple, and a counterpart connector is integral with the first part of the first temple.

11. A pair of glasses as recited in claim **1**, wherein the second part of the first temple comprises:

a support arm having a first end and a second end;

an attachment member connected to a first end of said support arm; and

at least one attached electrical component provided proximate to the second end of said support arm.

12. A pair of glasses as recited in claim **11**, wherein said at least one attached electrical component is a speaker.

13. A pair of glasses as recited in claim **12**, wherein the second part of the first temple further comprises an ear bud positioned proximate to the second end of said support arm.

14. A pair of glasses as recited in claim **1**, wherein said pair of glasses further comprises:

a first hinge pivotally coupling the first part of the first temple to the first lens ho**1**der; and

a second hinge pivotally coupling the second temple to the second lens holder,

wherein a first end of the first part of the first temple couples to but does not include the first hinge, and a second end of the first part of the first temple couples to the second part of the first temple.

15. A pair of glasses as recited in claim **14**, wherein both the first part and the second pert of the first temple are both positioned before the first hinge.

16. An eyeglass frame, comprising:

an eyeglass frame having at least first and second temples, one on each side of the eyeglass frame, the first temple having a forward part that removably couples to a rearward part; and

a first electronic device partially or fully embedded in the rearward part of the first temple,

wherein said eyeglass frame further comprises a second electronic device partially or fully embedded in the forward part of the first temple,

wherein the rearward part and the forward part of the first temple are interconnected by a connector, and

wherein, when the rearward part and the forward part of the first temple are interconnected, the first electronic device and the second electronic device are electrically interconnected by way of the connector.

17. An eyeglass frame as recited in claim **16**, wherein the first electronic device is selected from the group of: a data storage device, a sun sensor, a pedometer, a hearing enhancement device and a media player.

18. An eyeglass frame as recited in claim **16**, wherein the connector is a USB connector.

19. An eyeglass frame as recited in claim **16**, wherein, when the rearward part and the forward part of the first temple are interconnected, the first electronic device and the second electronic device are electrically interconnected and cooperate to provide a consumer electronic device with the eyeglass frame.

* * * * *

UNITED STATES PATENT AND TRADEMARK OFFICE

CERTIFICATE OF CORRECTION

PATENT NO. : 7,581,833 B2
APPLICATION NO. : 11/580222
DATED : September 1, 2009
INVENTOR(S) : Howell et al.

It is certified that error appears in the above-identified patent and that said Letters Patent is hereby corrected as shown below:

On the Title Page:
On Page 2, Item (56) under U.S. Patent Documents:
"5,359,370 A 10/1994 Mugnler"
should be --5,359,370 A 10/1994 Mugnier--.

"6,046,455 A 4/2000 Ribl et al."
should be --6,046,455 A 4/2000 Ribi et al.--.

"7,312,699 B2 12/2007 Chomenky"
should be --7,312,699 B2 12/2007 Chornenky--.

"7,378,238 B2 5/2008 Hilbrig et al."
should be --7,376,238 B1 5/2008 Rivas et al.--.

On Page 3, Item (56) under Other Publications:
""Cardo Wireless Attaching Clips and Wearing Headset", Cardo Systems, Inc., http://www.cardowireless.com/cllps.php, downloaded Nov. 27, 2004, pp. 1-3." should be --"Cardo Wireless Attaching Clips and Wearing Headset", Cardo Systems, Inc., http://www.cardowireless.com/clips.php, downloaded Nov. 27, 2004. pp. 1-3.--.

""Ultraviolet Radiation (UVR)", Forum North, Ontario Ministry of Labour, http://www3.mb.sympatico.ca/-ericc/ULTRAVIOLET%20RADIATION.htm, downloaded Feb. 5, 2004, pp. 1-6." should be --"Ultraviolet Radiation (UVR)", Forum North, Ontario Ministry of Labour, http://www3.mb.sympatico.ca/~ericc/ULTRAVIOLET%20RADIATION.htm, downloaded Feb. 5, 2004, pp. 1-6.--.

Signed and Sealed this
Twenty-sixth Day of May, 2015

Michelle K. Lee

Michelle K. Lee
Director of the United States Patent and Trademark Office

""With Racing Heart", Skaloud et al, GPS World, Oct. 1, 2001, http://www.gpsworld,com/gpsworld/content/printContentPopup.isp?id=1805, pp. 1-5." should be --"With Racing Heart", Skaloud et al, GPS World, Oct. 1, 2001, http://www.gpsworld.com/gpsworld/content/printContentPopup.jsp?id=1805, pp. 1-5.--.

"Cool Last Minute Gift Ideasl, UltimateFatBurner Reviews and Articles, http://www.ultimatefatburner.com/gift-ideas.html, downloaded May 10, 2005, pp. 1-3." should be --Cool Last Minute Gift Ideas!, UltimateFatBurner Reviews and Articles, http://www.ultimatefatburner.com/gift-ideas.html, downloaded May 10, 2005, pp. 1-3.--.

"Monitoring Athletes Performance–2002 Winter Olympic News from KSL, Jan. 23, 2002, http://2002.ksl.com/news-3885l.php, pp. 1-3." should be --Monitoring Athletes Performance–2002 Winter Olympic News from KSL, Jan. 23, 2002, http://2002.ksl.com/news-3885i.php, pp. 1-3.--.

"NIWA, "UV Index Information", http://www.niwa.crl.nz/services/uvozone/uvl-info, downloaded Jul. 15, 2004, pp. 1-2." should be --NIWA, "UV Index Information", http://www.niwa.cri.nz/services/uvozone/uvi-info, downloaded Jul. 15, 2004, pp. 1-2.--.

In the Specification:
Column 1, line 54, "which Is hereby incorporated"
should be --which is hereby incorporated--.

Column 12, lines 24-25, "FIG. 31 is a diagram"
should be --FIG. 3I is a diagram--.

Column 26, line 19, "illustrated in FIG. 11 B"
should be --illustrated in FIG. 11B--.

In the Claims:
Column 29, line 35 (claim 2, line 3), "are operatively Interconnected"
should be --are operatively interconnected--.

Column 29, line 60 (claim 7, line 6), "second part of me first temple"
should be --second part of the first temple--.

Column 30, line 26 (claim 14, line 4), "first lens ho1der"
should be --first lens holder--.

Column 30, line 34 (claim 15, line 2), "second pert of the first temple"
should be --second part of the first temple--.