US006857741B2

(12) **United States Patent**
Blum et al.

(10) **Patent No.: US 6,857,741 B2**
(45) **Date of Patent: Feb. 22, 2005**

(54) **ELECTRO-ACTIVE MULTI-FOCAL SPECTACLE LENS**

(75) Inventors: **Ronald D. Blum**, Roanoke, VA (US); **William Kokonaski**, Gig Harbor, WA (US); **Dwight P. Duston**, Laguna Niguel, CA (US)

(73) Assignee: **E-Vision, LLC**, Roanoke, VA (US)

(*) Notice: Subject to any disclaimer, the term of this patent is extended or adjusted under 35 U.S.C. 154(b) by 103 days.

(21) Appl. No.: **10/422,128**

(22) Filed: **Apr. 24, 2003**

(65) **Prior Publication Data**

US 2004/0027501 A1 Feb. 12, 2004

Related U.S. Application Data

(63) Continuation-in-part of application No. 10/387,143, filed on Mar. 12, 2003, and a continuation-in-part of application No. 10/281,204, filed on Oct. 28, 2002, now Pat. No. 6,733,130, and a continuation-in-part of application No. 10/263,707, filed on Oct. 4, 2002, which is a continuation-in-part of application No. 10/046,244, filed on Jan. 16, 2002.

(60) Provisional application No. 60/375,028, filed on Apr. 25, 2002.

(51) **Int. Cl.**[7] **G02C 7/06**

(52) **U.S. Cl.** **351/168**; 351/159

(58) **Field of Search** 351/159, 41, 44, 351/168, 161, 163–165, 169, 176–177

(56) **References Cited**

U.S. PATENT DOCUMENTS

2,437,642	A	3/1948	Henroteau
2,576,581	A	11/1951	Edwards
3,161,718	A	12/1964	de Luca
3,245,315	A	4/1966	Marks et al.
3,614,215	A	10/1971	Mackta
3,738,734	A	6/1973	Tait et al.
4,174,156	A	11/1979	Glorieux

(List continued on next page.)

FOREIGN PATENT DOCUMENTS

EP	0 154 962	A2	9/1985
EP	0 233 104	A1	8/1987
EP	0 237 365	A1	9/1987
GB	2169417	A	7/1986
GB	2170613	A	8/1986
JP	55-076323		6/1980
JP	1-237610		9/1989
JP	10366043		12/1998
WO	PCT/US91/04976		7/1991
WO	PCT/US97/21688		11/1997
WO	WO 98/27863		7/1998
WO	WO 03/050472	A1	6/2003
WO	WO 03/068059	A2	8/2003
WO	WO 2004/008189	A1	1/2004
WO	WO 2004/015481	A1	2/2004
WO	WO 2004/034095	A2	4/2004

(List continued on next page.)

OTHER PUBLICATIONS

M. Anderson, "Adaptive Optics: Liquid Crystals Lower the Cost of Adaptive Optics", *Laser Focus World*, pp. 1–3, Dec. 1999.

(List continued on next page.)

Primary Examiner—Jordan M. Schwartz
(74) *Attorney, Agent, or Firm*—Hunton & Williams LLP

(57) **ABSTRACT**

Electro-active multi-focal spectacles are disclosed. The spectacles have a stack of at least two electro-active regions. The electro-active regions produce a plurality of viewing correction zones. The spectacles also have a controller for independently activating the electro-active regions to produce viewing correction zones. An electro-active multi-focal spectacle having a blending zone is also disclosed. The blending zone provides a transition of optical power between viewing correction zones.

31 Claims, 64 Drawing Sheets

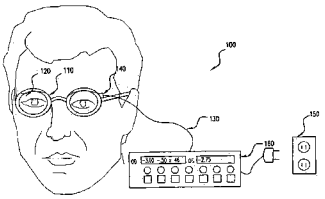

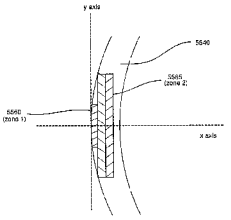

Luxottica Ex. 1005
IPR Petition USP 8,708,483

U.S. PATENT DOCUMENTS

4,181,408 A 1/1980 Senders
4,190,330 A 2/1980 Berreman
4,264,154 A 4/1981 Petersen
4,279,474 A 7/1981 Belgorod
4,300,818 A 11/1981 Schachar
4,373,218 A 2/1983 Schachar
4,395,736 A 7/1983 Fraleux
4,418,990 A 12/1983 Gerber
4,457,585 A 7/1984 DuCorday
4,466,706 A 8/1984 Lamothe, II
4,529,268 A 7/1985 Brown
4,564,267 A 1/1986 Nishimoto
4,572,616 A 2/1986 Kowel et al.
4,577,928 A 3/1986 Brown
4,601,545 A 7/1986 Kern
4,609,824 A 9/1986 Munier et al.
4,712,870 A 12/1987 Robinson et al.
4,756,605 A 7/1988 Okada et al.
4,772,094 A 9/1988 Sheiman
D298,250 S 10/1988 Kildall
4,787,733 A 11/1988 Silva
4,795,248 A 1/1989 Okada et al.
4,818,095 A 4/1989 Takeuchi
4,836,652 A 6/1989 Oishi et al.
4,880,300 A 11/1989 Payner et al.
4,904,063 A 2/1990 Okada et al.
4,907,860 A 3/1990 Noble
4,919,520 A 4/1990 Okada et al.
4,927,241 A 5/1990 Kuijk
4,929,865 A 5/1990 Blum
4,930,884 A 6/1990 Tichenor et al.
4,945,242 A 7/1990 Berger et al.
4,952,788 A 8/1990 Berger et al.
4,958,907 A 9/1990 Davis
4,961,639 A 10/1990 Lazarus
4,968,127 A 11/1990 Russell et al.
4,981,342 A 1/1991 Fiala
4,991,951 A 2/1991 Mizuno et al.
5,015,086 A 5/1991 Okaue et al.
5,030,882 A 7/1991 Solero
5,050,981 A 9/1991 Roffman
5,066,301 A 11/1991 Wiley
5,067,795 A * 11/1991 Senatore 349/14
5,073,021 A 12/1991 Marron
5,076,665 A 12/1991 Petersen
5,091,801 A 2/1992 Ebstein
5,108,169 A 4/1992 Mandell
5,114,628 A 5/1992 Höfer et al.
5,130,856 A 7/1992 Tichenor et al.
5,142,411 A 8/1992 Fiala
5,171,266 A 12/1992 Wiley et al.
5,182,585 A 1/1993 Stoner
5,184,156 A 2/1993 Black et al.
5,200,859 A 4/1993 Payner et al.
5,208,688 A 5/1993 Fergason et al.
5,229,885 A 7/1993 Quaglia
5,239,412 A 8/1993 Naka et al.
D342,063 S 12/1993 Howitt et al.
5,306,926 A 4/1994 Yonemoto
5,324,930 A 6/1994 Jech, Jr.
D350,342 S 9/1994 Sack
5,352,886 A 10/1994 Kane
5,359,444 A 10/1994 Piosenka et al.
5,375,006 A 12/1994 Haas
5,382,986 A 1/1995 Black et al.
5,386,308 A 1/1995 Michel et al.
5,440,357 A 8/1995 Quaglia
5,443,506 A 8/1995 Gurabet
5,451,766 A 9/1995 Van Berkel
5,488,439 A 1/1996 Weltmann
5,522,323 A 6/1996 Richard
5,552,841 A * 9/1996 Gallorini et al. 351/49
5,608,567 A 3/1997 Grupp
5,615,588 A 4/1997 Gottschald
5,654,786 A 8/1997 Bylander
5,682,223 A 10/1997 Menezes et al.
RE35,691 E 12/1997 Theirl et al.
5,712,721 A 1/1998 Large
5,728,155 A 3/1998 Anello et al.
5,739,959 A 4/1998 Quaglia
5,777,719 A 7/1998 Williams et al.
5,815,233 A 9/1998 Morokawa et al.
5,815,239 A 9/1998 Chapman et al.
5,861,936 A 1/1999 Sorensen
5,900,720 A 5/1999 Kallman et al.
5,949,521 A 9/1999 Williams et al.
5,953,098 A 9/1999 Lieberman et al.
5,980,037 A 11/1999 Conway
6,086,204 A 7/2000 Magnante
6,095,651 A 8/2000 Williams et al.
6,145,987 A 11/2000 Baude et al.
6,305,802 B1 10/2001 Roffman et al.
6,325,508 B1 12/2001 Decreton et al.
6,437,925 B1 8/2002 Nishioka
6,464,363 B1 10/2002 Nishioka et al.
6,554,425 B1 4/2003 Roffman et al.
6,609,794 B2 8/2003 Levine
6,616,275 B1 9/2003 Dick et al.
6,616,279 B1 9/2003 Davis et al.
6,626,532 B1 9/2003 Nishioka et al.
6,631,001 B2 10/2003 Kuiseko
6,682,195 B2 1/2004 Dreher

OTHER PUBLICATIONS

WIPO, International Search Report dated Mar. 25, 2004, International Patent Application No. PCT/US03/25796, 4 pages.

"Control Optimization of Spherical Modal Liquid Crystal Lenses"; A. F. Naumov and G. D. Love, *Optics Express*, vol. 4, No. 9, Apr. 26, 1999, pp. 344–352.

"Liquid Crystal Adaptive Lenses with Modal Control"; A. F. Naumov and M. Yu Loktev, *Optics Letters*, vol. 23, No. 13, Jul. 1, 1998, pp. 992–994.

"Liquid Lenses Eye Commercial Breakthrough" (Internet Article under "Optics.org"); from *Opto & Laser*, Nov. 2003.

WIPO, *PCT International Search Report*, mailing date Aug. 11, 2003, pp. 1–3, PCT/US03/12528.

"Focusing by Electrical Modulation of Refraction in a Liquid Crystal Cell"; Stephen T. Kowel et al., *Applied Optics*, vol. 23, No. 2, Jan. 15, 1984, pp. 278–289.

"Computer Vision Syndrome—The Eyestrain Epidemic"; Robert A. Davis, O.D., *Review of Optometry*, Sep. 15, 1997, pp. 80–88.

"The Use of Yoked Base–Up and Base–In Prism for Reducing Eye Strain at the Computer"; Stuart M. Lazarus, O.D., *Journal of the American Optometric Association*, Apr. 1996, pp. 204–208.

Eyecare Business, Oct. 1997 (entire issue).

"Vision Through a Liquid–Crystal Spatial Light Modulator"; Larry N. Thibos et al., *Inpress*, Adaptive Optics Conference, Durham, United Kingdom, 1999.

"Requirements for Segmented Spatial Light Modulators for Diffraction–Limited Imaging Through Aberrated Eyes"; Larry N. Thibos et al., *Inpress*, Adaptive Optics Conference, Durham, United Kingdom, 1999.

"Use of Liquid–Crystal Adaptive–Optics to Alter the Refractive State of the Eye"; Larry N. Thibos et al., *Optometry and Vision Science*, vol. 74, No. 7, Jul. 1997.

"Profile: Larry N. Thibos, Ph.D. and Donald Miller, Ph.D.", *Indiana Journal of Optometry*, vol. 2, No. 1, pp. 5–10, 1999.

* cited by examiner

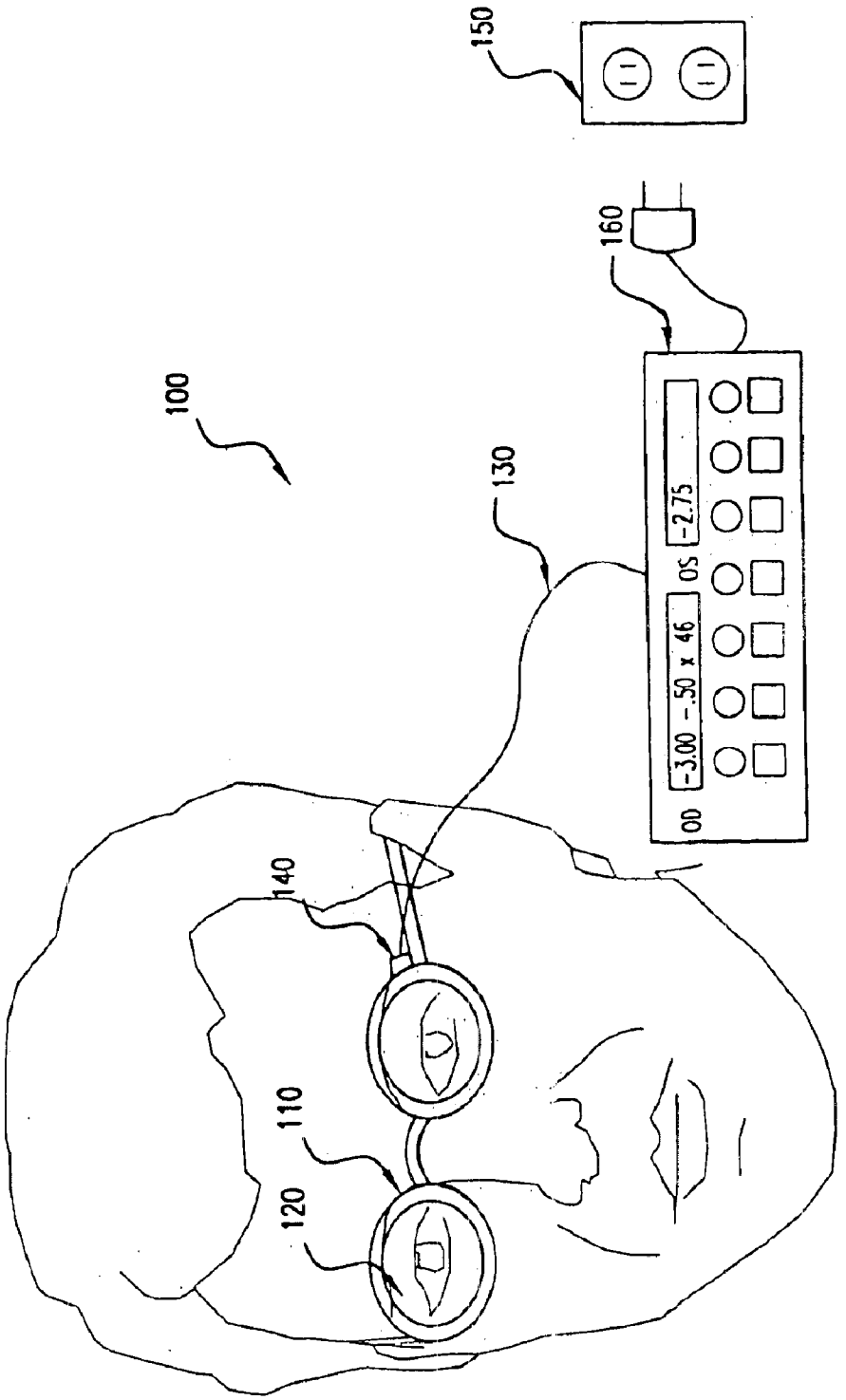

FIG. 1

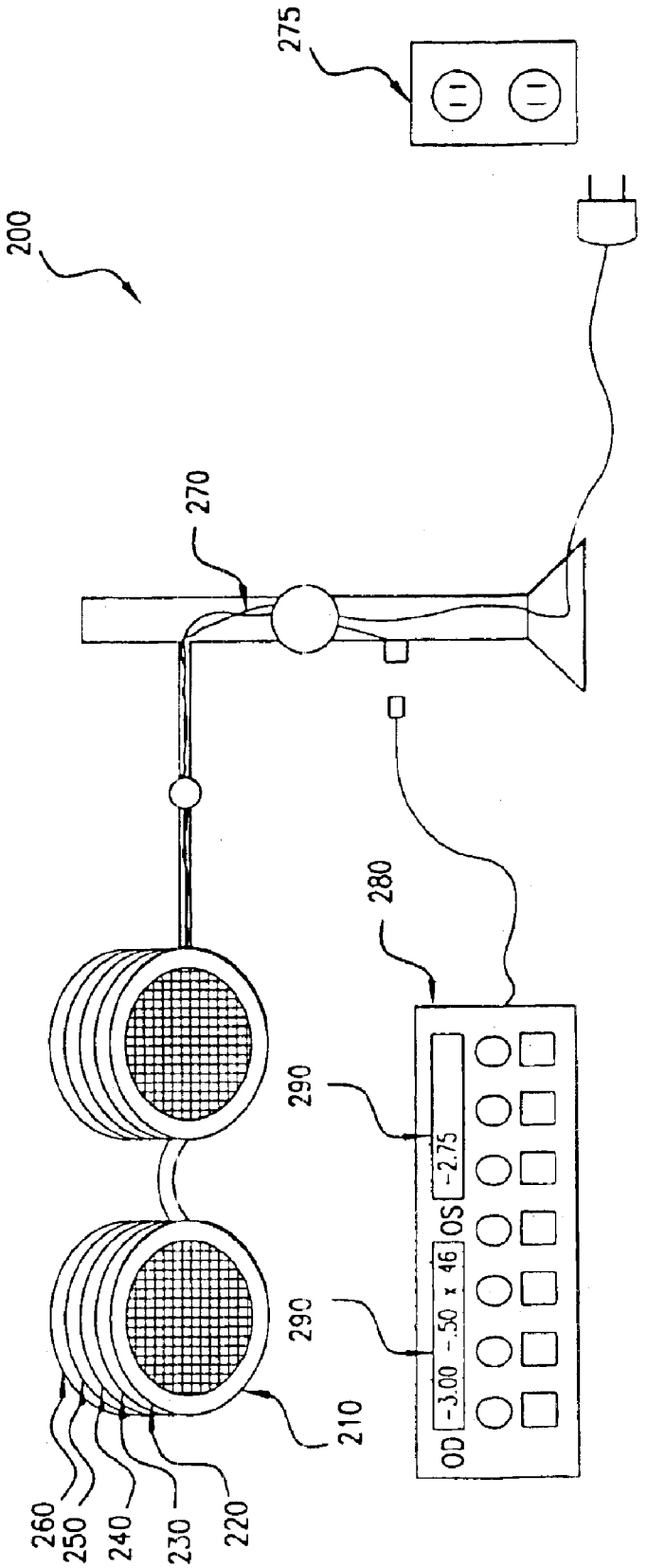
200
275
270
280
290
290
210
260
250
240
230
220
OD
-3.00
-.50 x 46
OS
-2.75

FIG.2

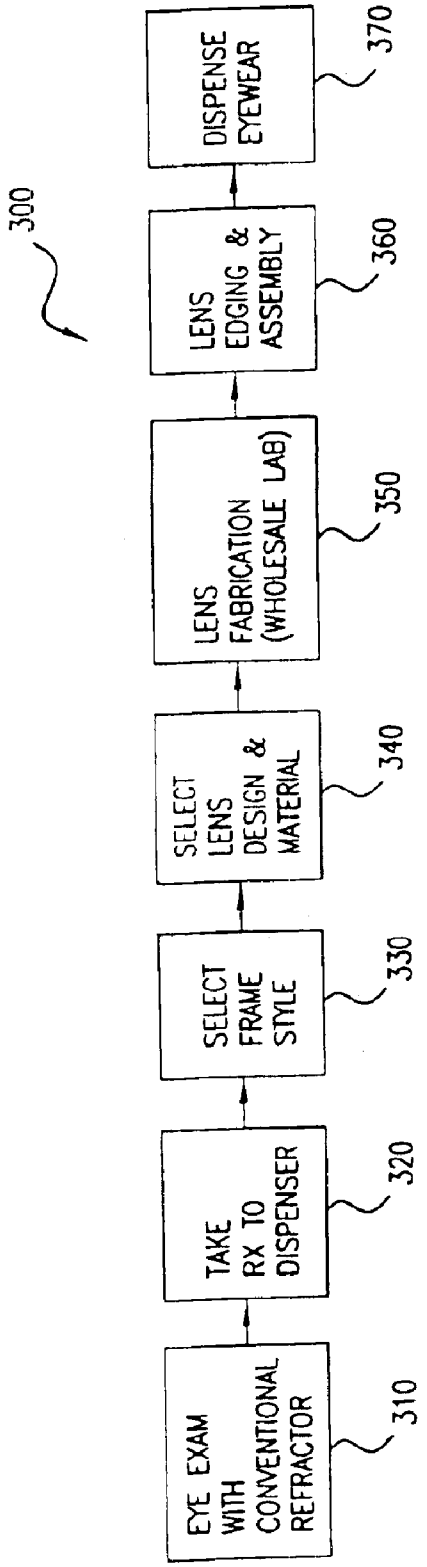
300
EYE EXAM WITH CONVENTIONAL REFRACTOR
310
TAKE RX TO DISPENSER
320
SELECT FRAME STYLE
330
SELECT LENS DESIGN & MATERIAL
340
LENS FABRICATION (WHOLESALE LAB)
350
LENS EDGING & ASSEMBLY
360
DISPENSE EYEWEAR
370

FIG.3

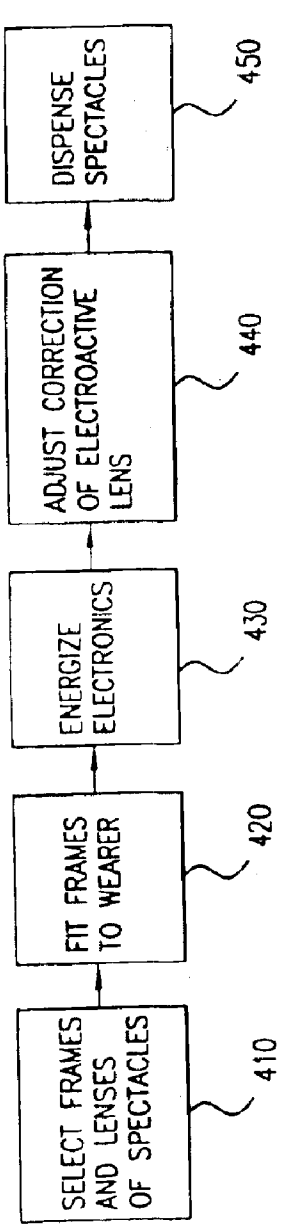
400
SELECT FRAMES AND LENSES OF SPECTACLES
410
FIT FRAMES TO WEARER
420
ENERGIZE ELECTRONICS
430
ADJUST CORRECTION OF ELECTROACTIVE LENS
440
DISPENSE SPECTACLES
450

FIG.4

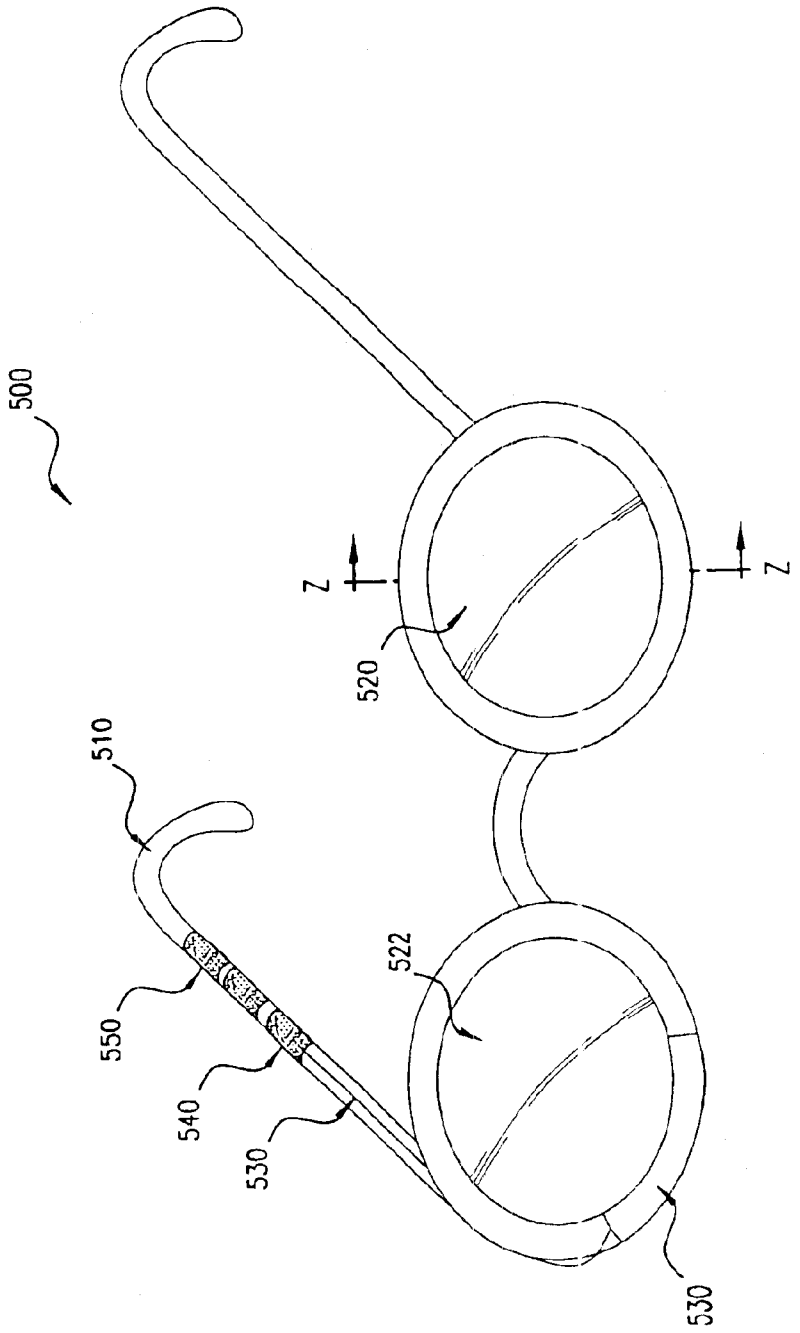

FIG.5

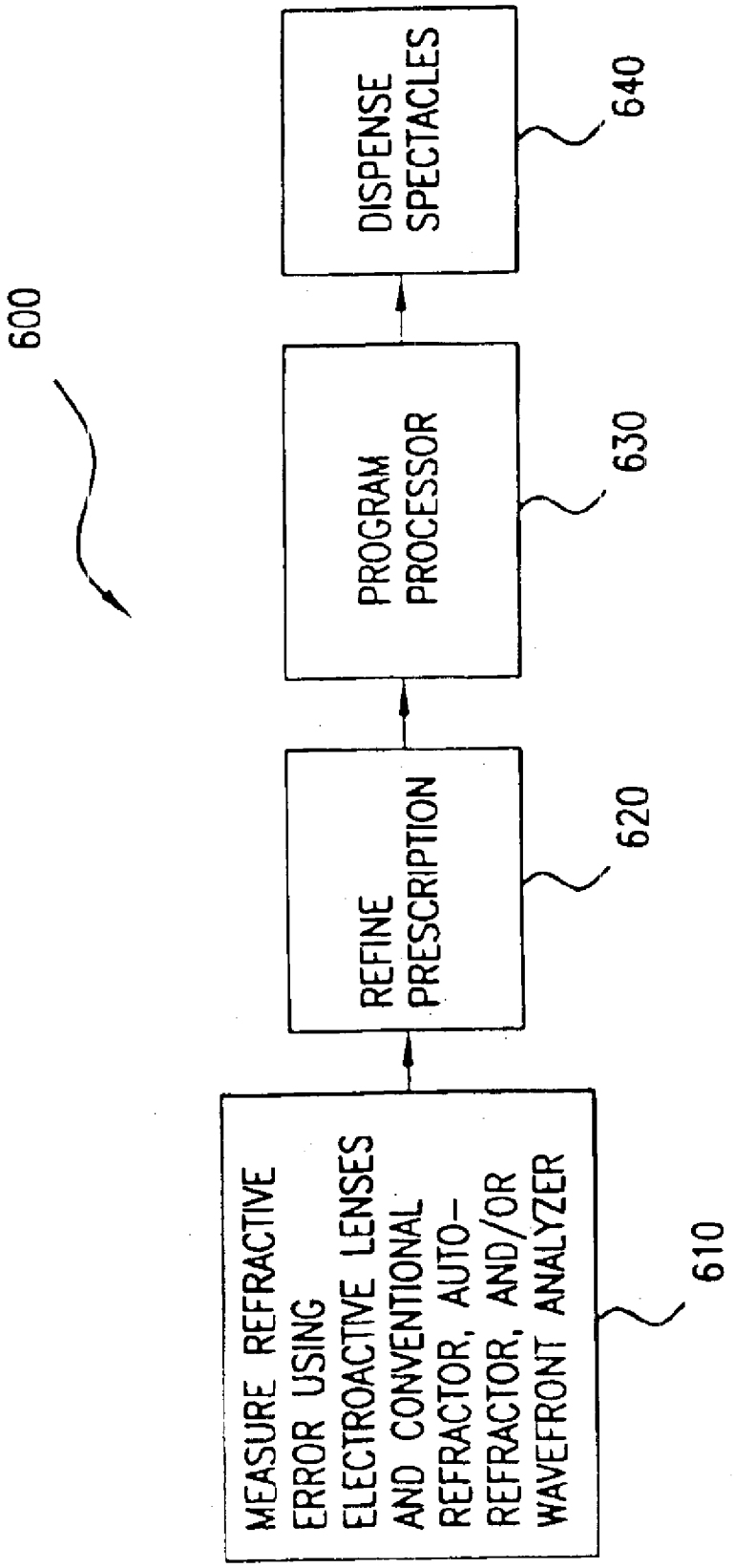
600
MEASURE REFRACTIVE ERROR USING ELECTROACTIVE LENSES AND CONVENTIONAL REFRACTOR, AUTO-REFRACTOR, AND/OR WAVEFRONT ANALYZER
610
REFINE PRESCRIPTION
620
PROGRAM PROCESSOR
630
DISPENSE SPECTACLES
640

FIG.6

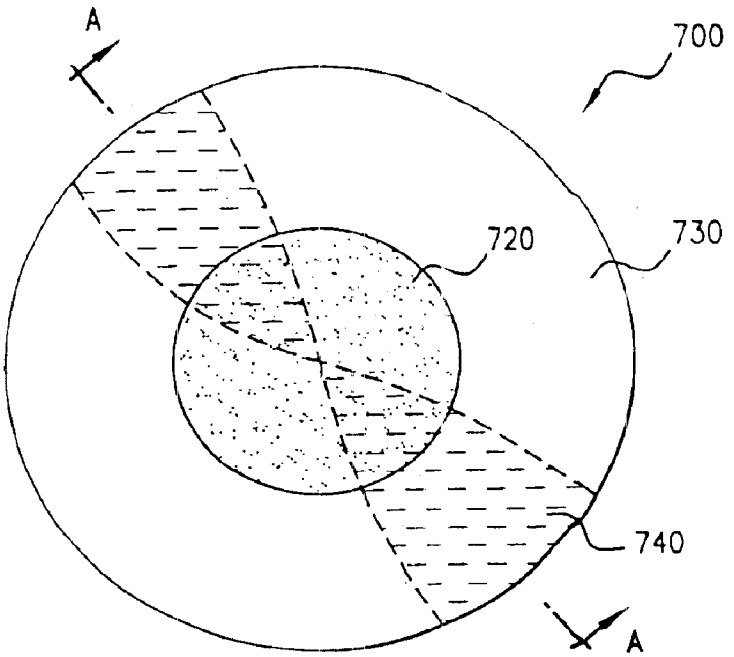

FIG.7

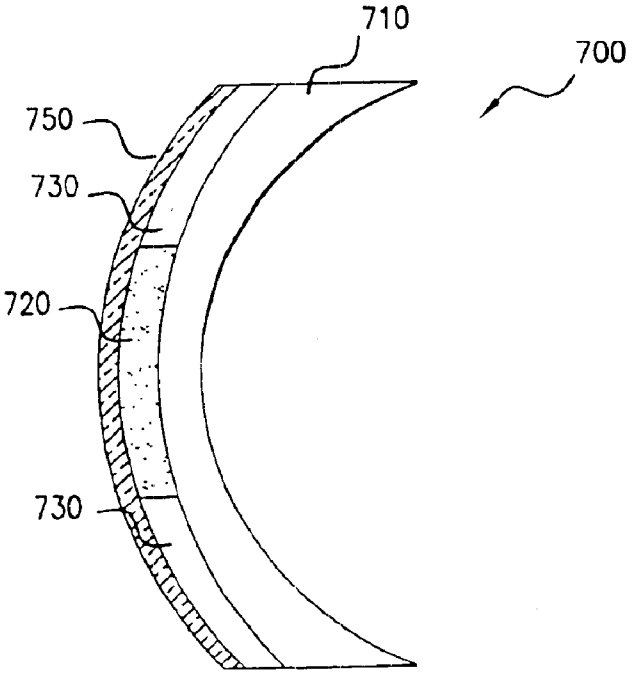

FIG.8

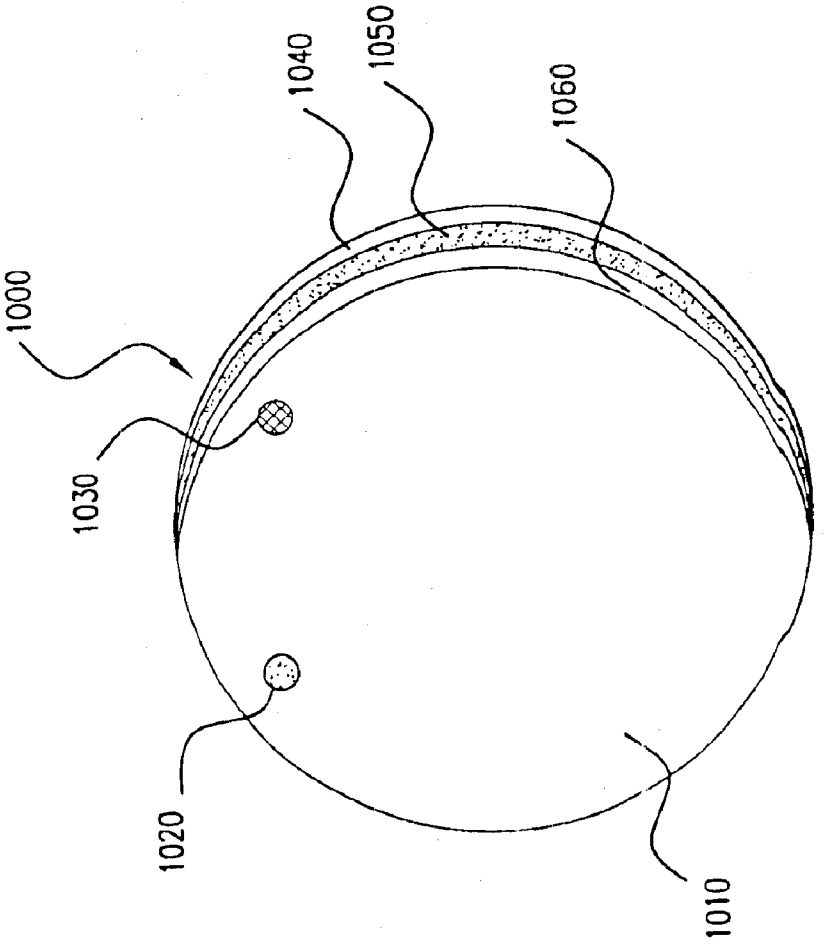

FIG.10

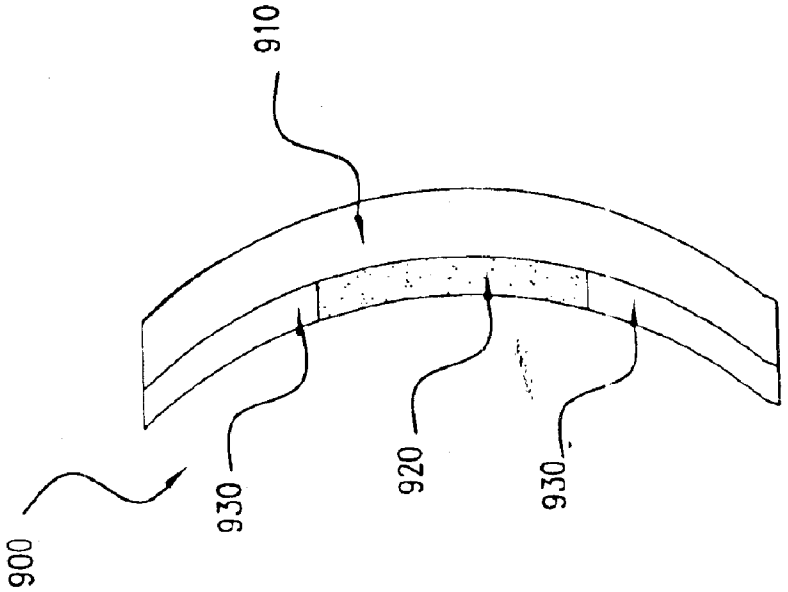

FIG.9

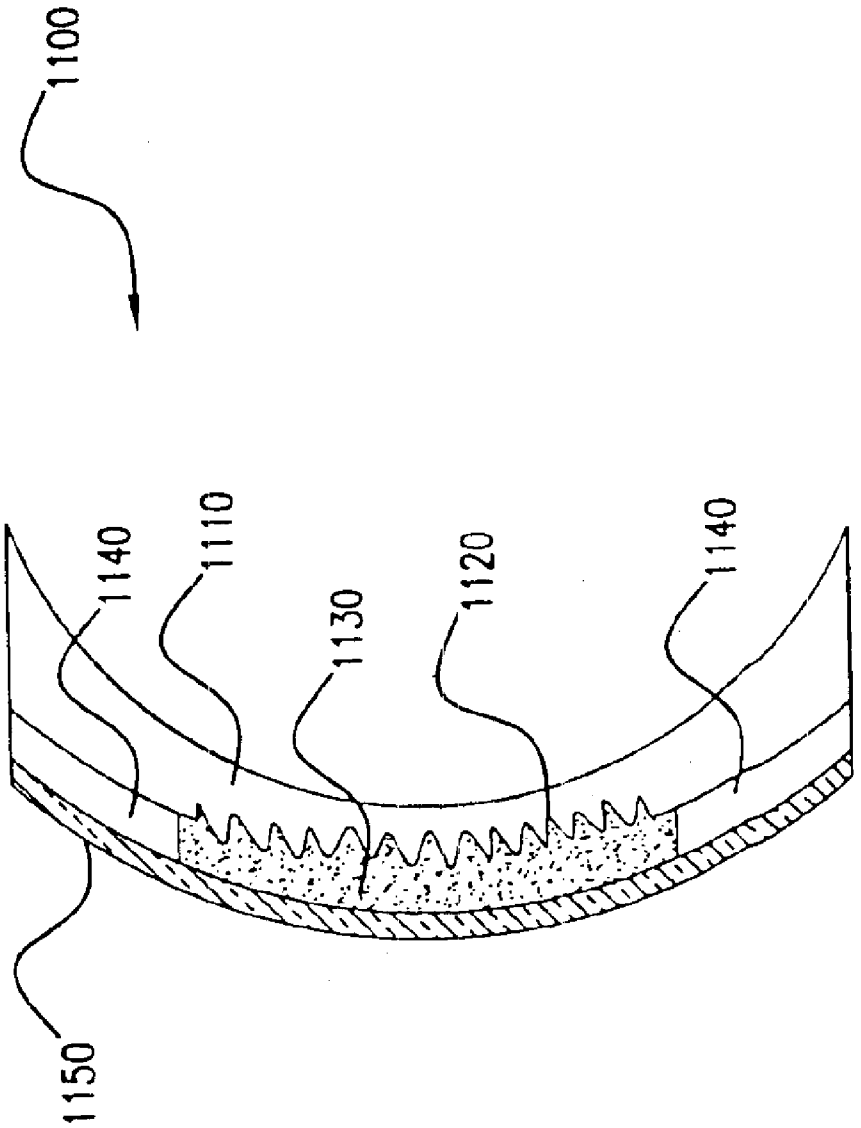

FIG. 11

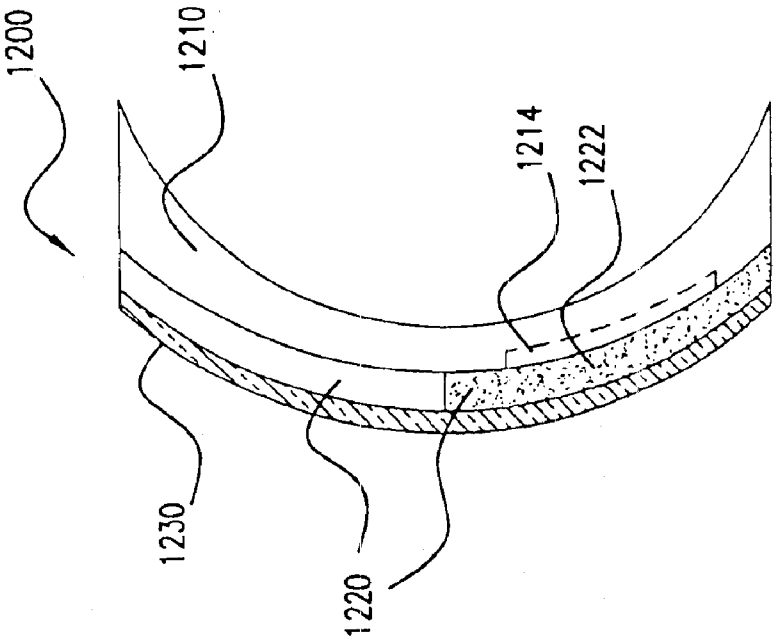
1200
1210
1214
1222
1230
1220

FIG.13

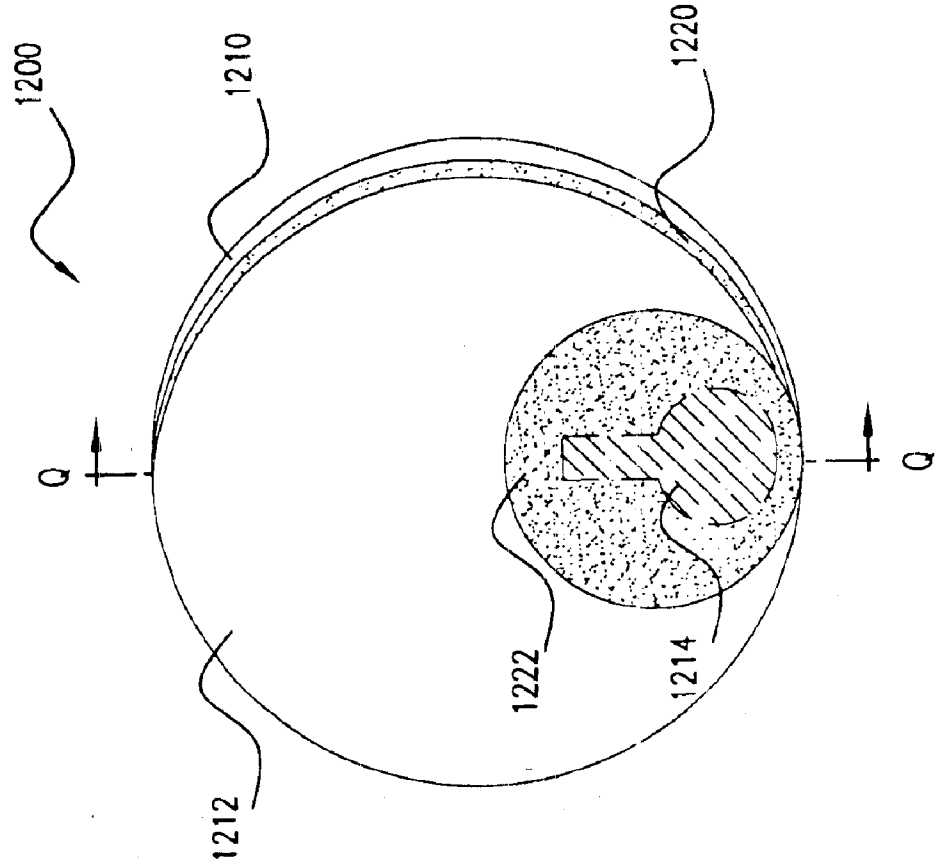
1200
1210
1220
Q
Q
1222
1214
1212

FIG.12

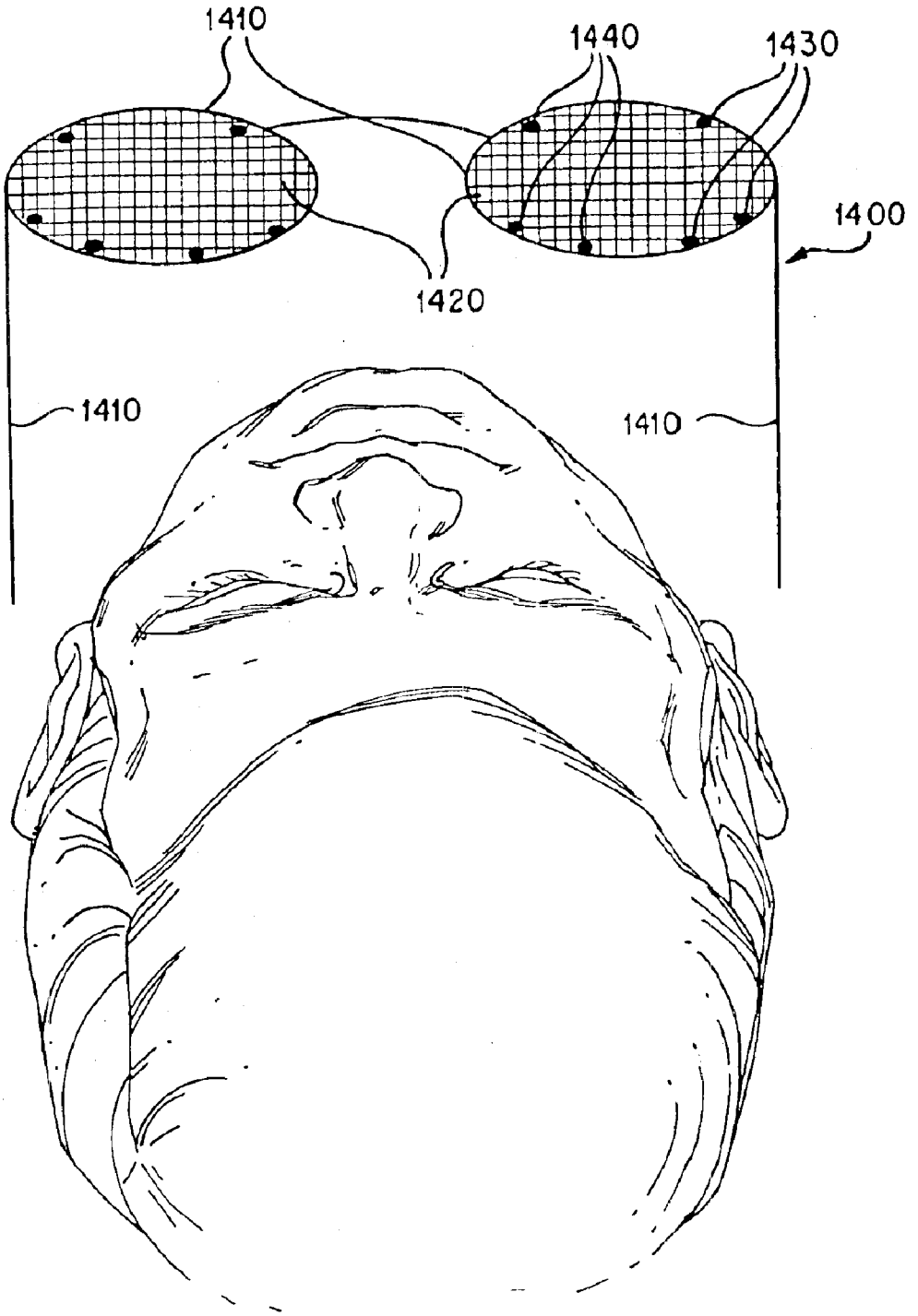

FIG. 14

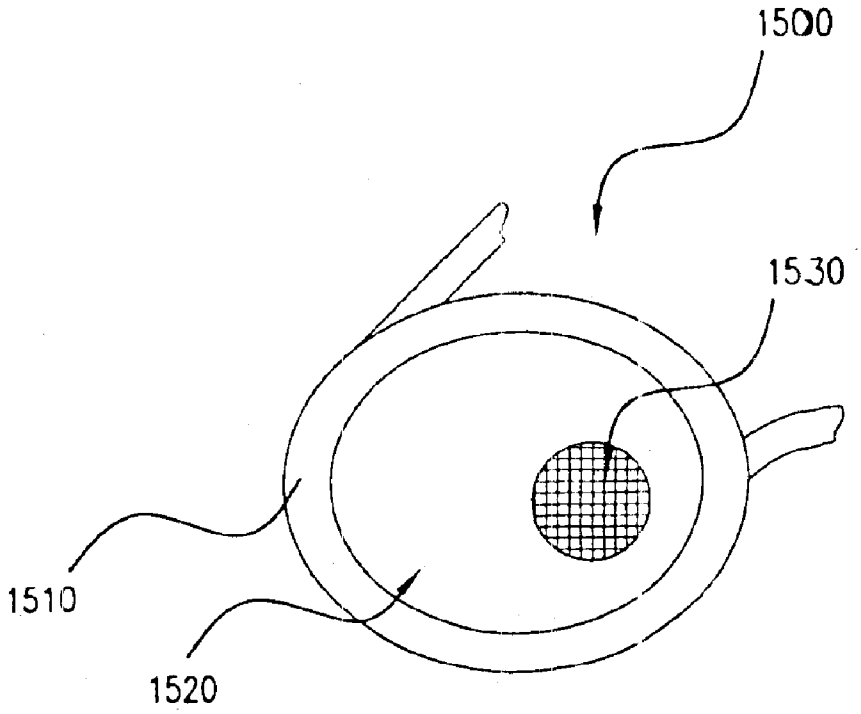

FIG.15

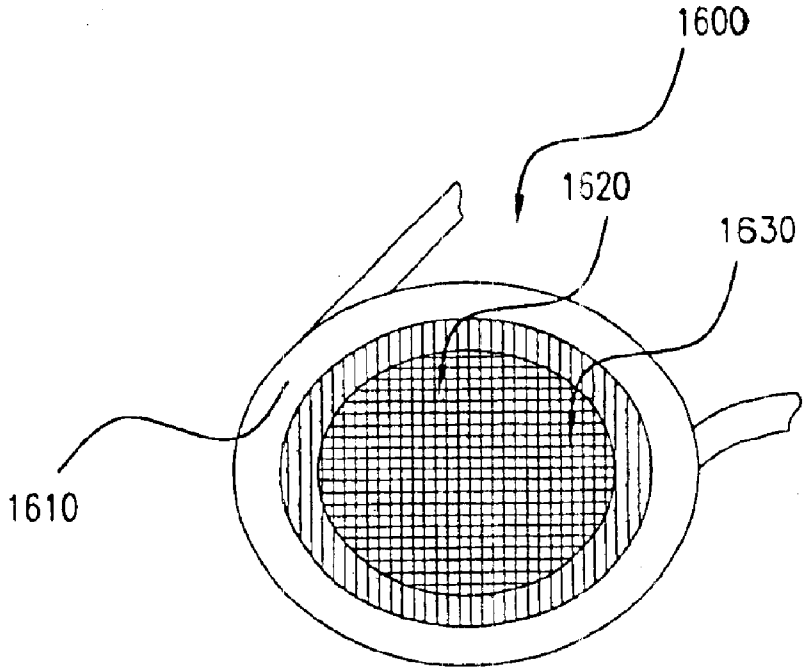

FIG.16

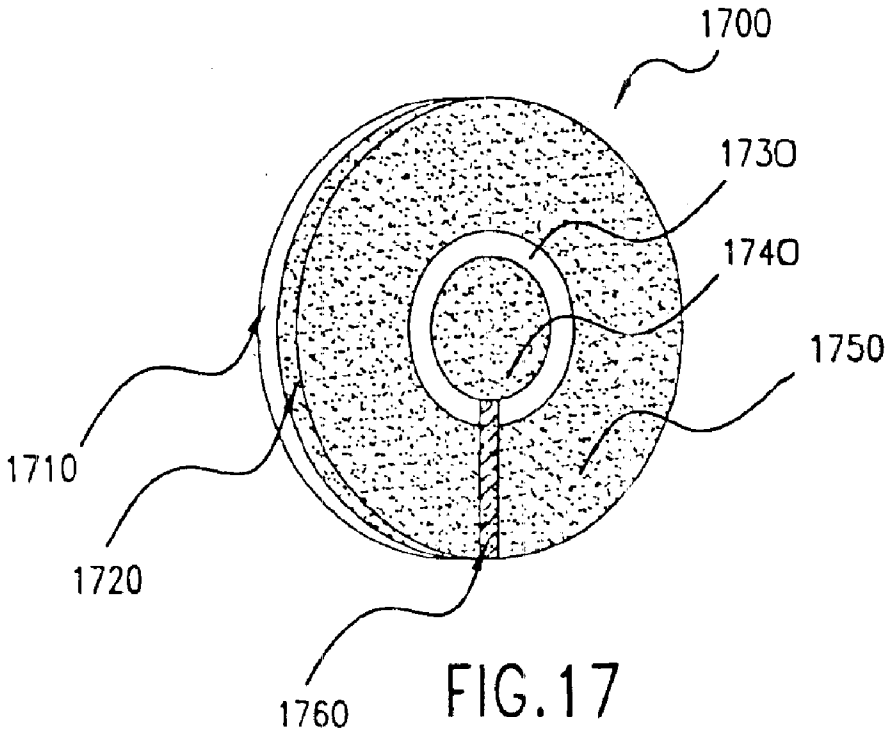
1700
1730
1740
1750
1710
1720
1760

FIG.17

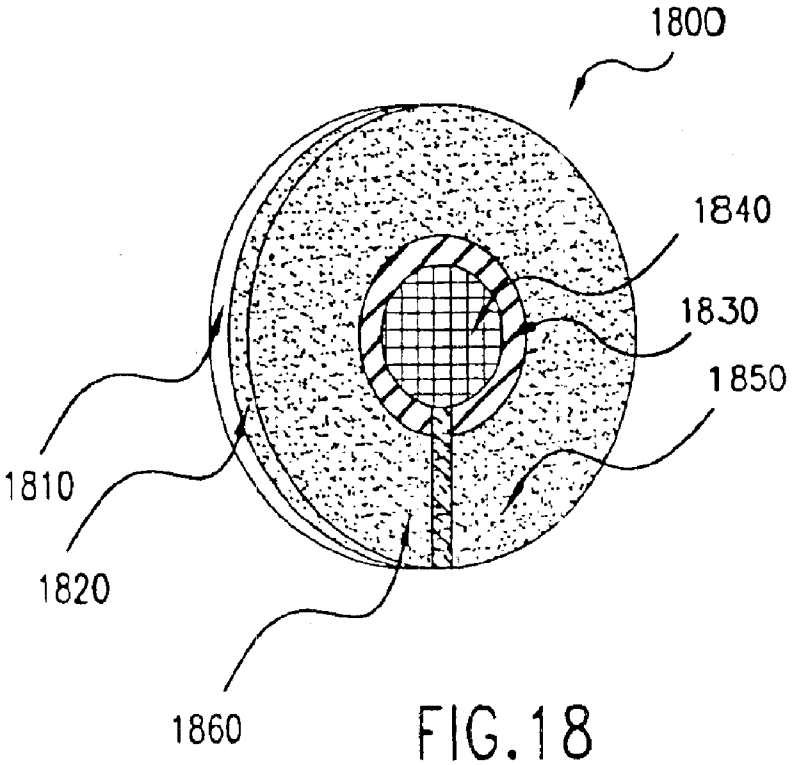
1800
1840
1830
1850
1810
1820
1860

FIG.18

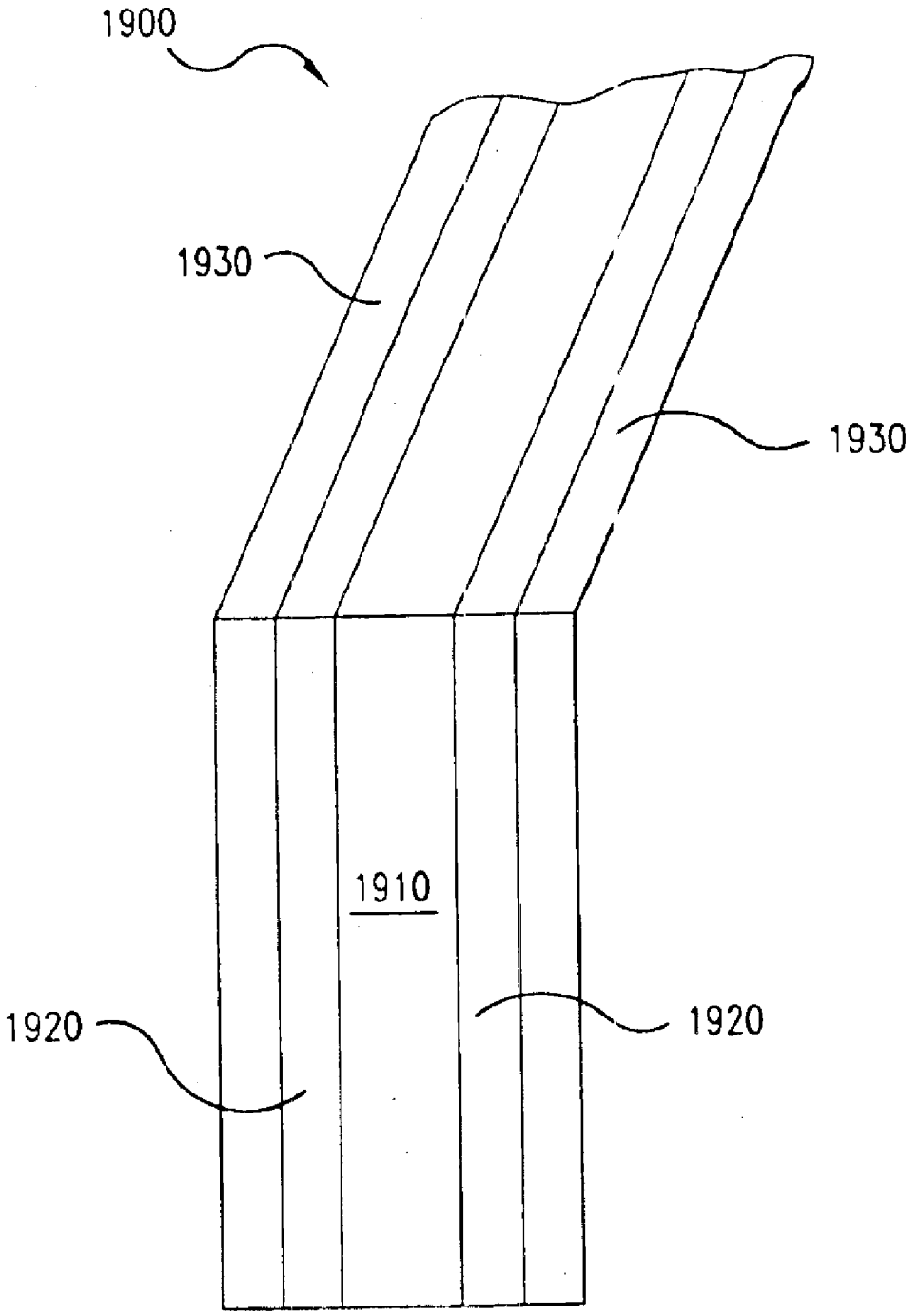

FIG.19

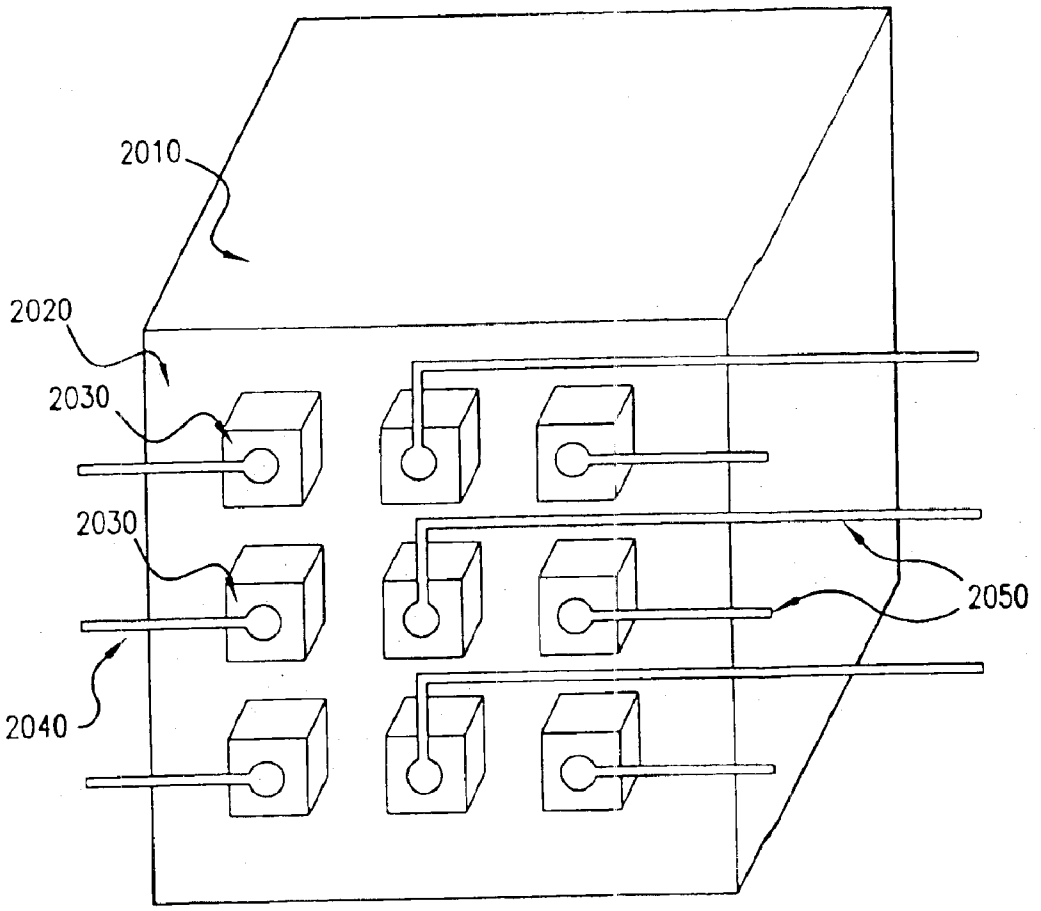

FIG.20

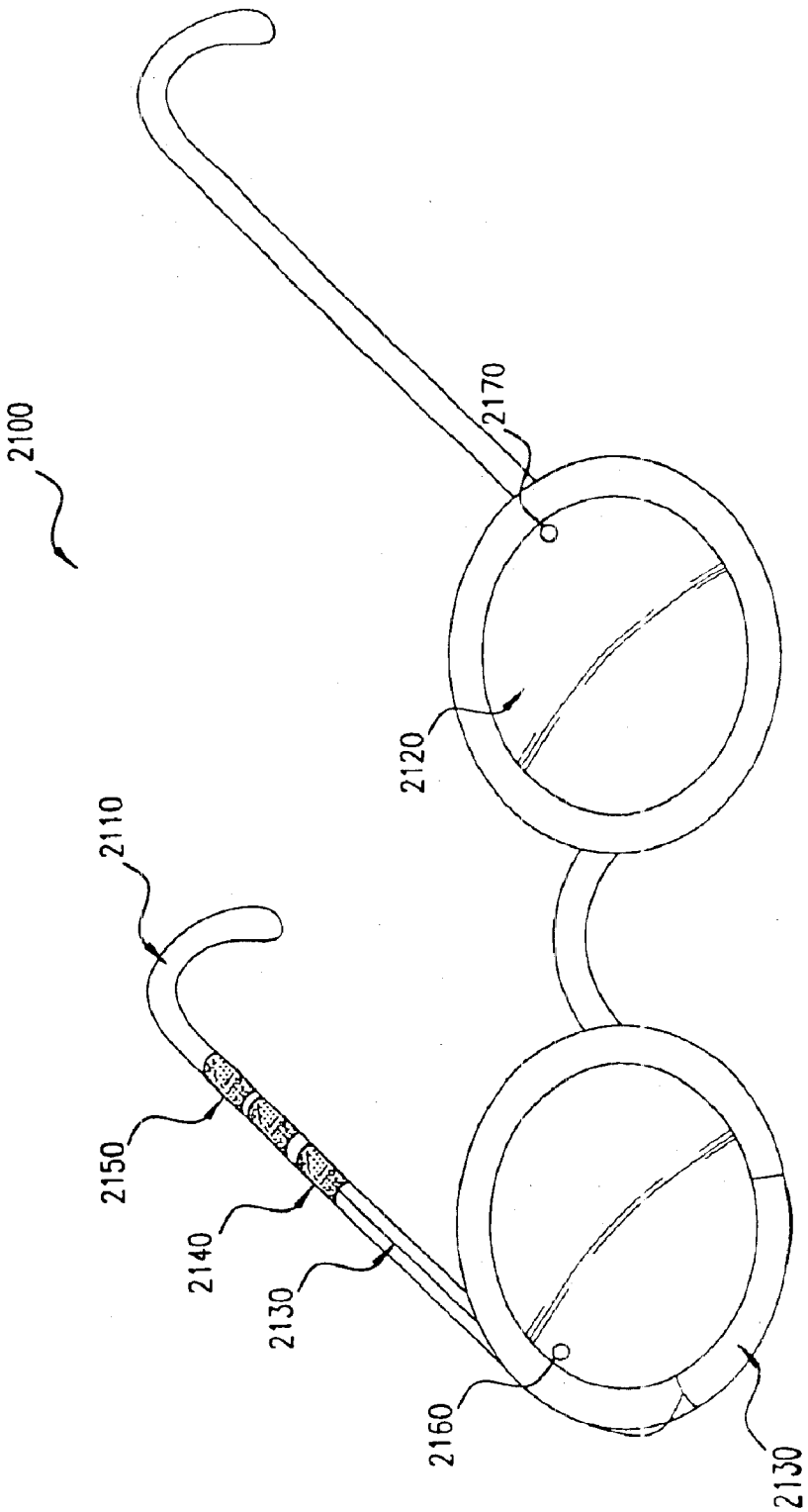

FIG.21

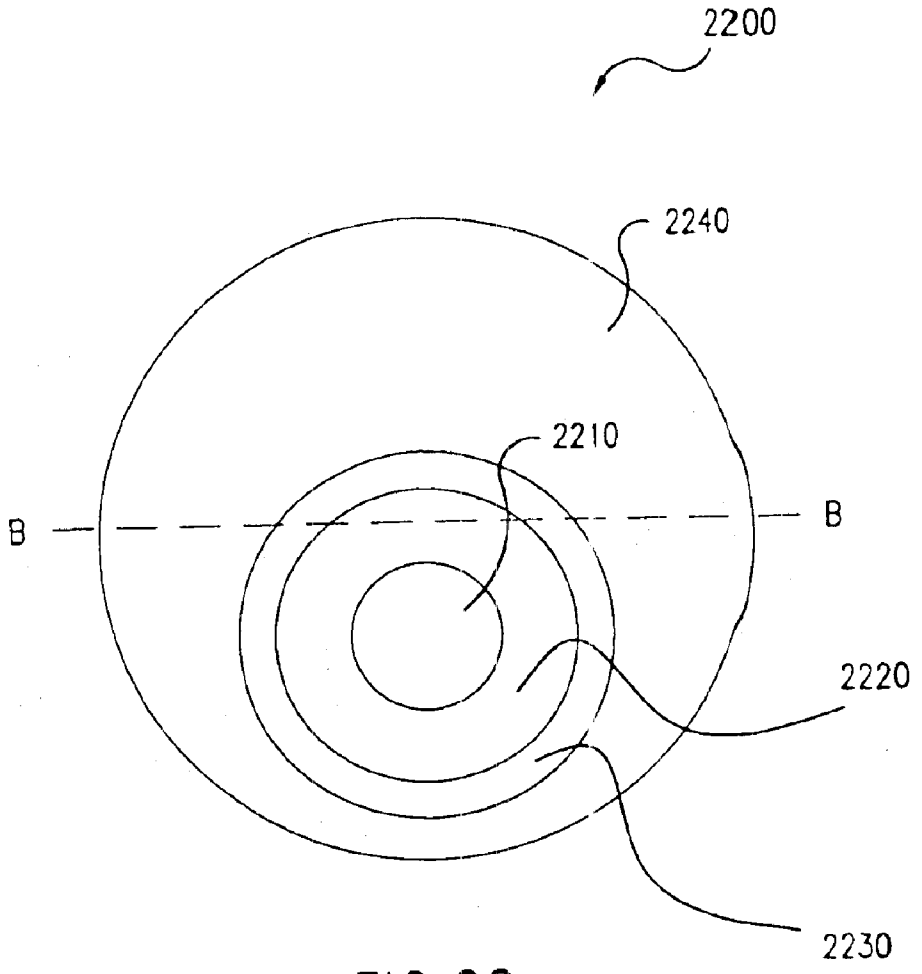

FIG.22

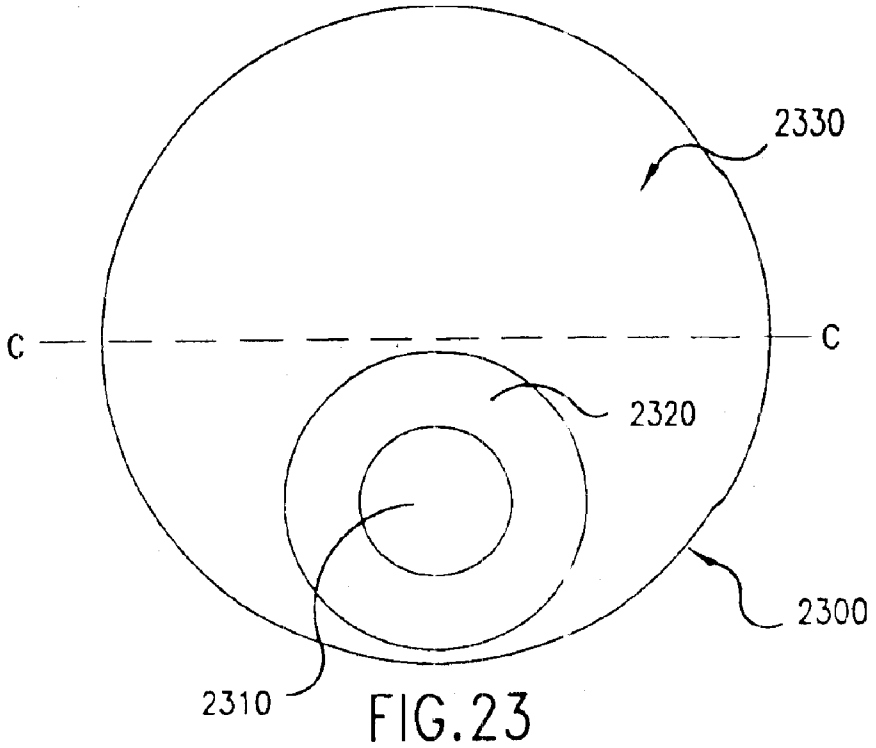

FIG.23

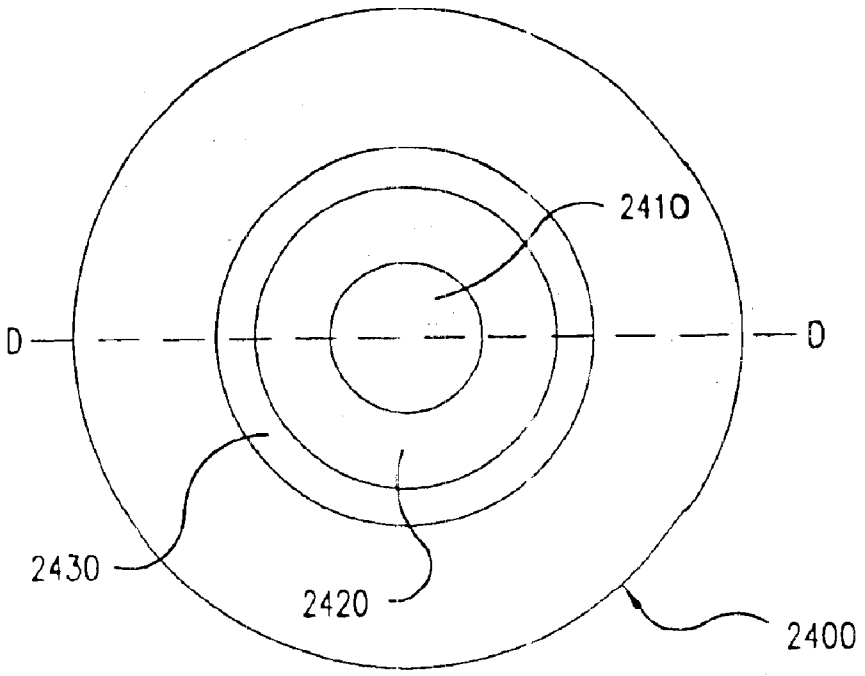

FIG.24

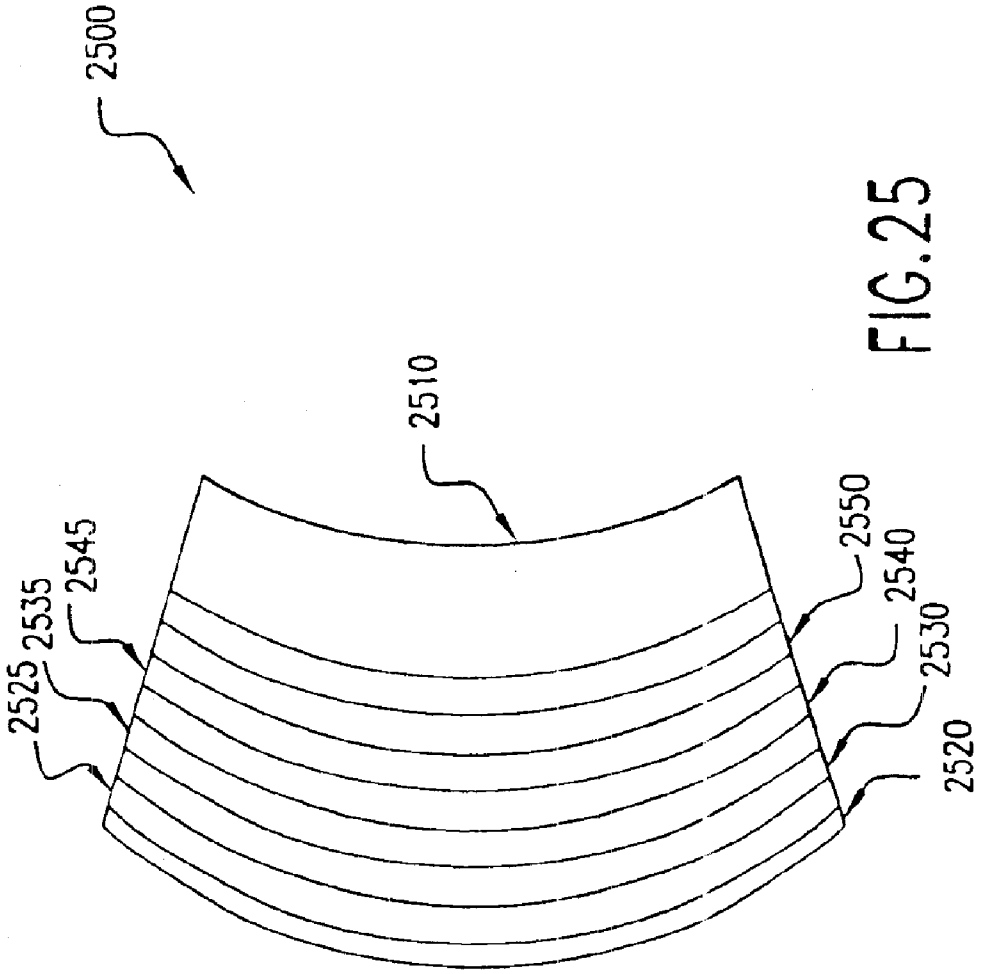

FIG. 25

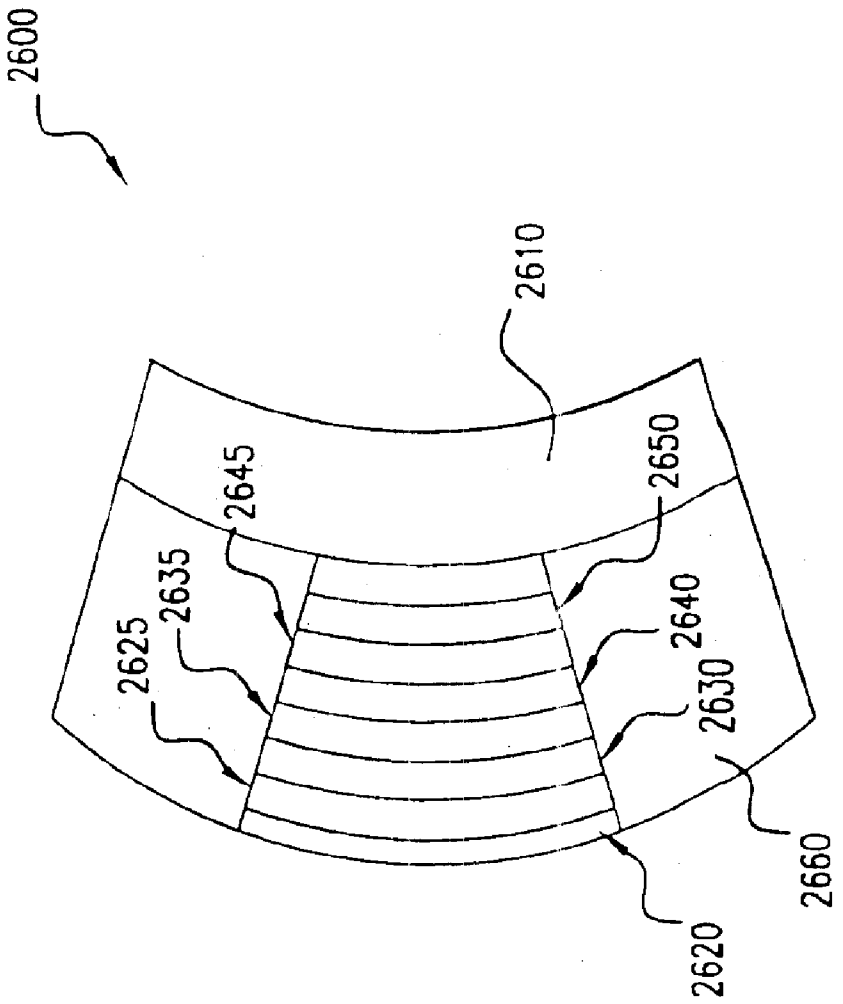

FIG. 26

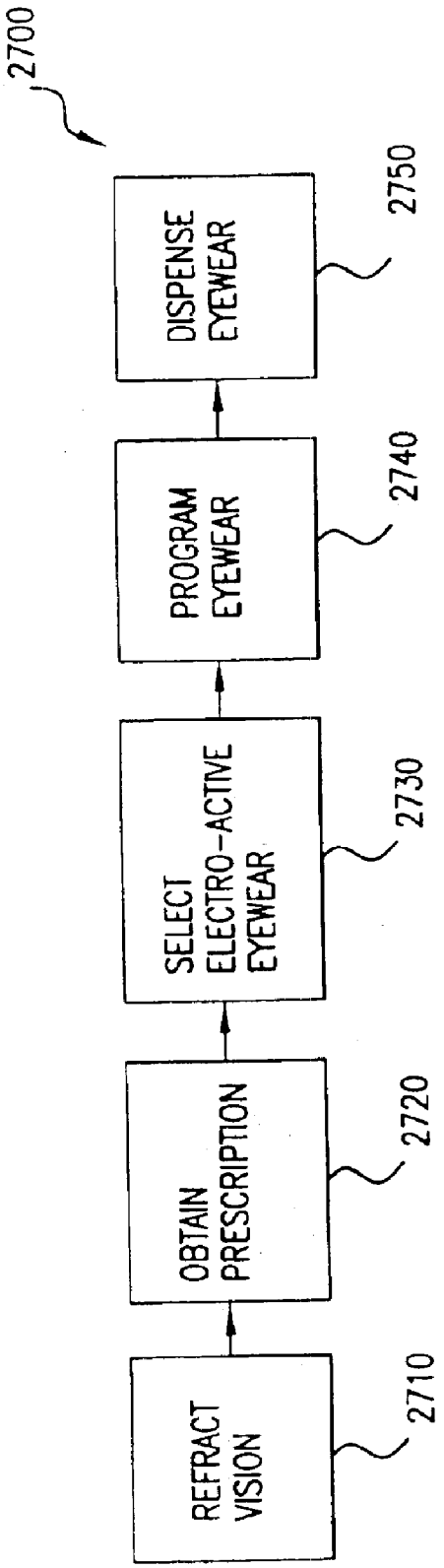
2700
REFRACT VISION
2710
OBTAIN PRESCRIPTION
2720
SELECT ELECTRO-ACTIVE EYEWEAR
2730
PROGRAM EYEWEAR
2740
DISPENSE EYEWEAR
2750

FIG. 27

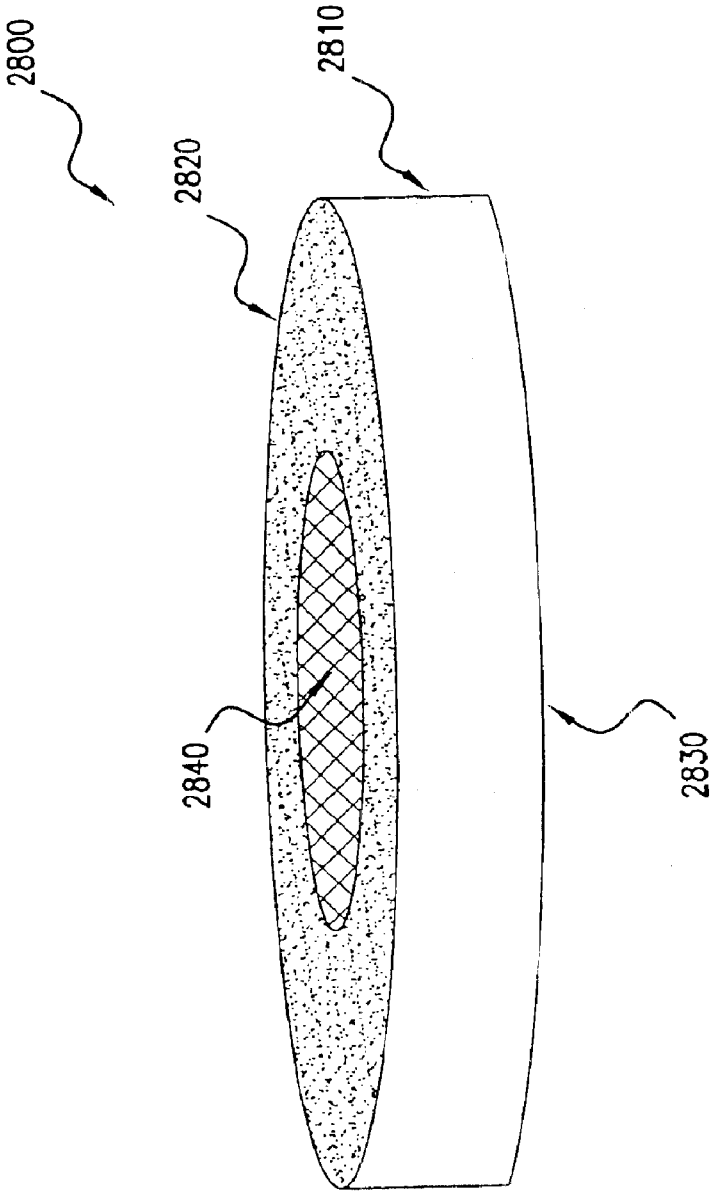

FIG. 28

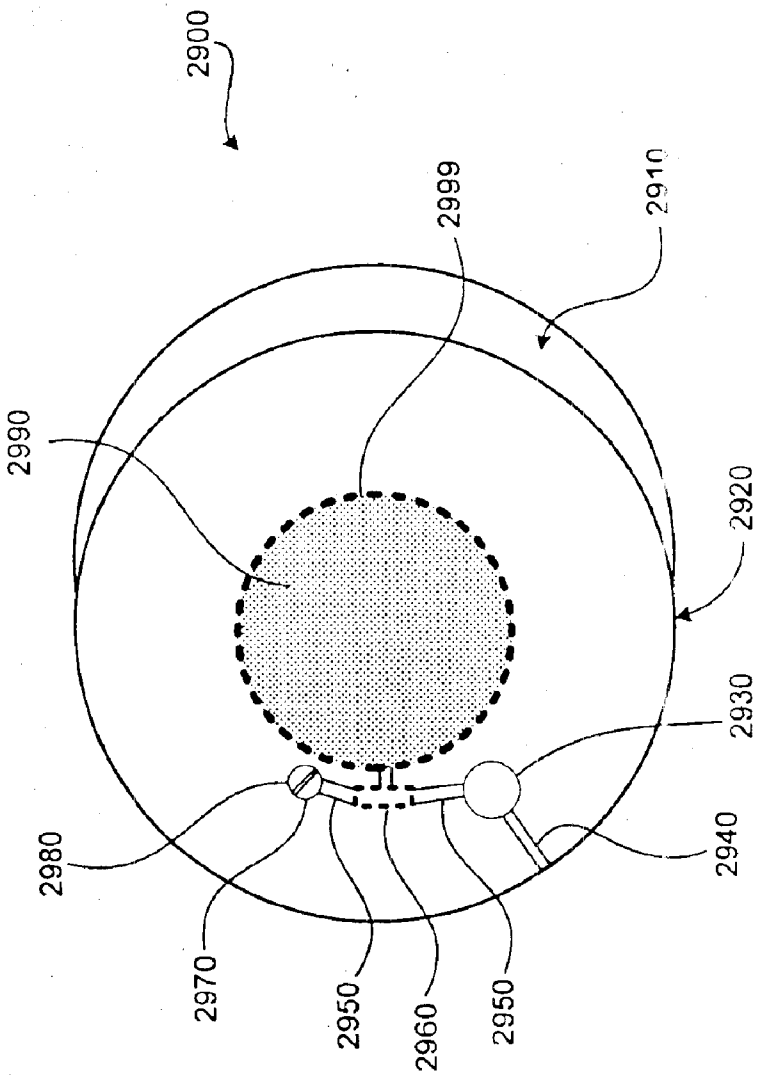

Figure 29

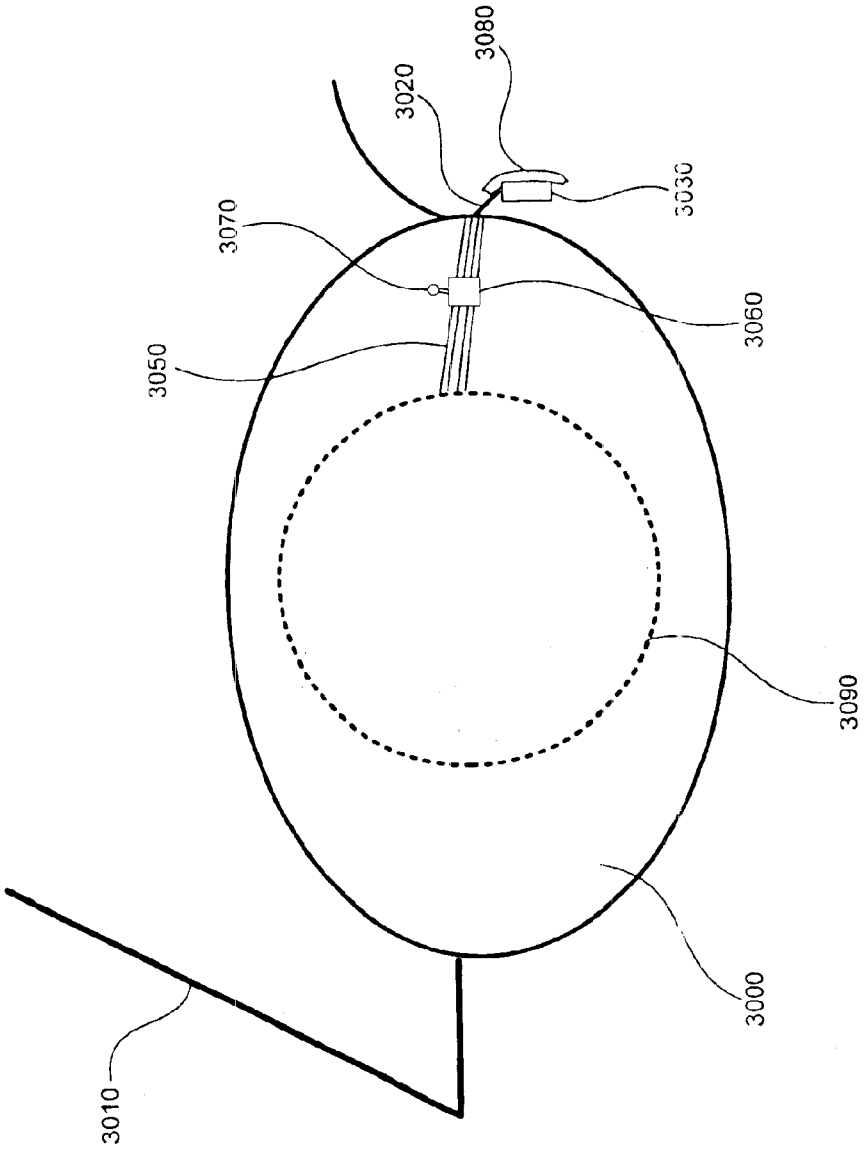

Figure 30

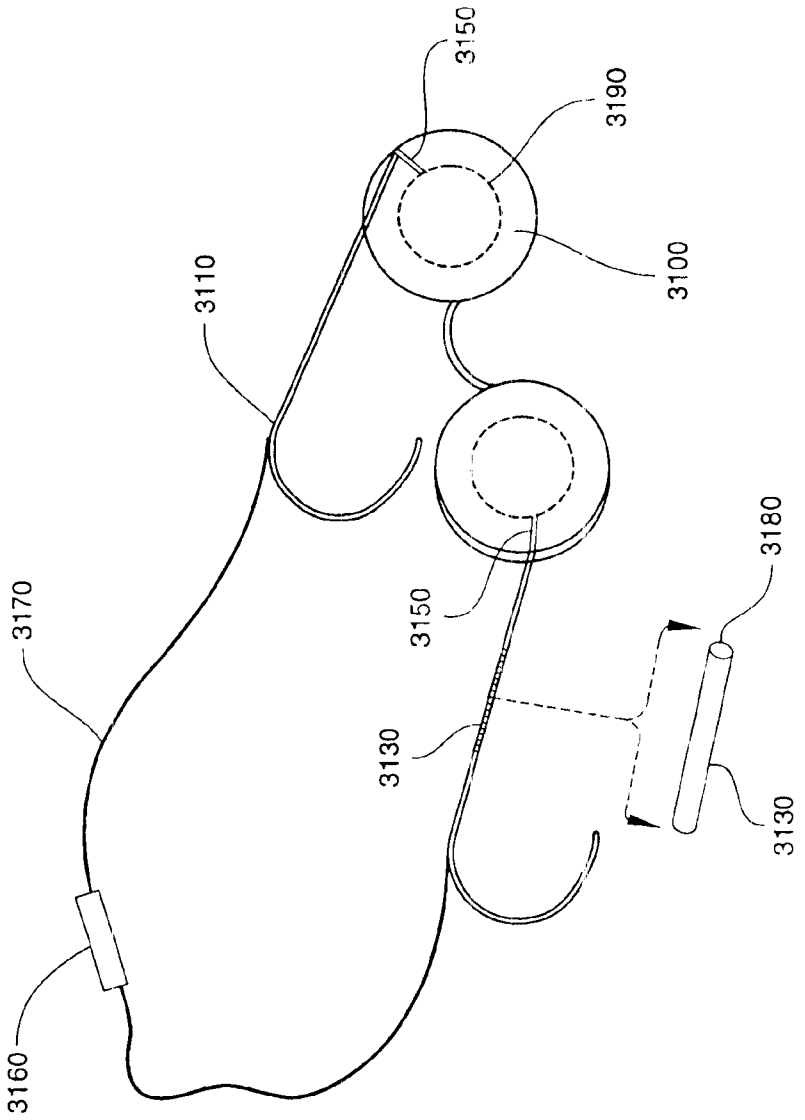

Fig. 31

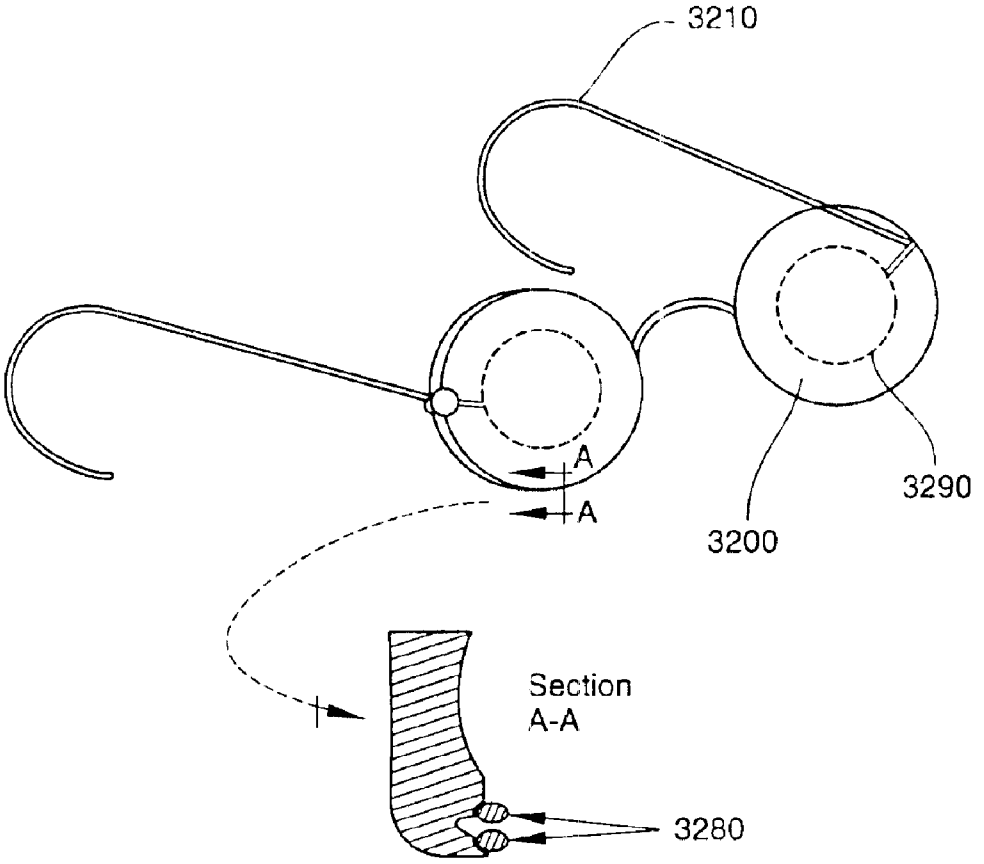

Fig. 32

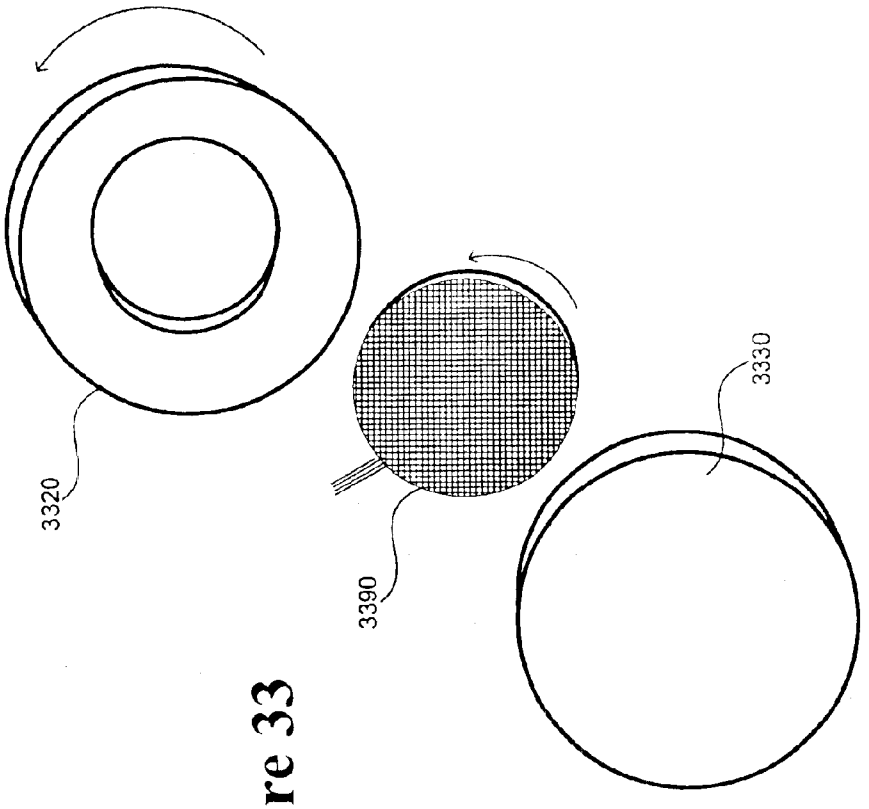

Figure 33

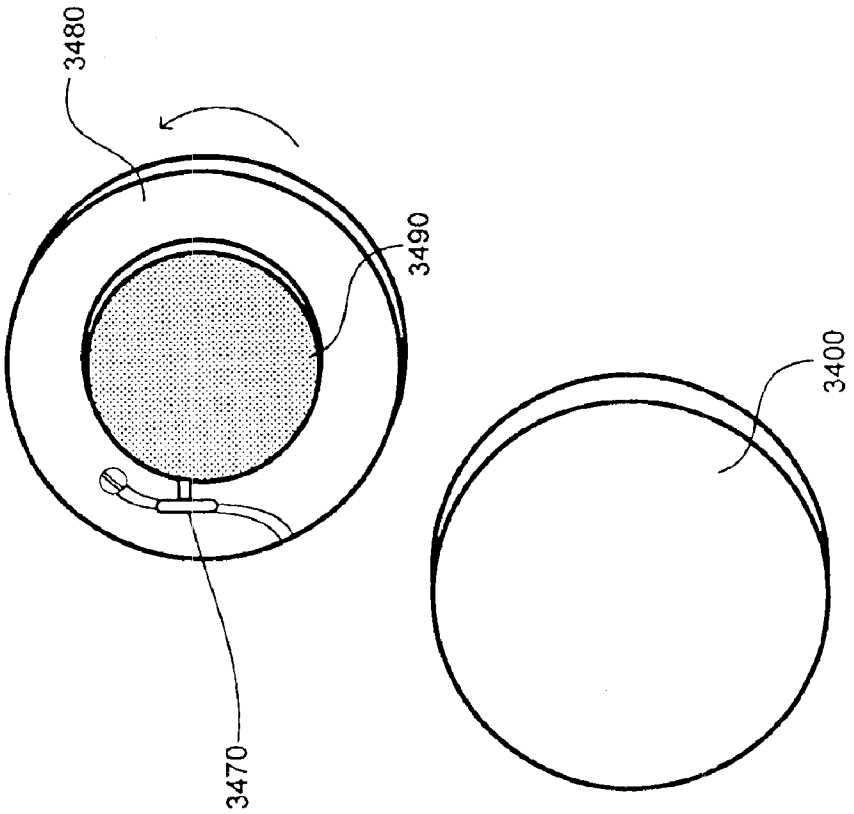

Figure 34

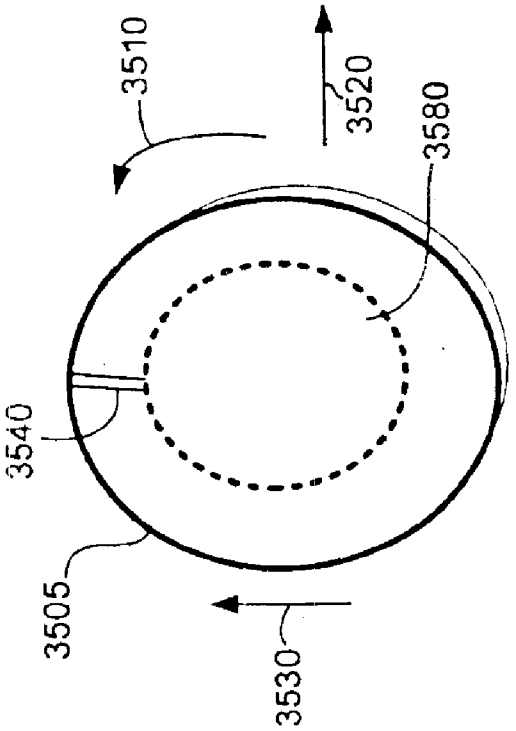

Figure 35b

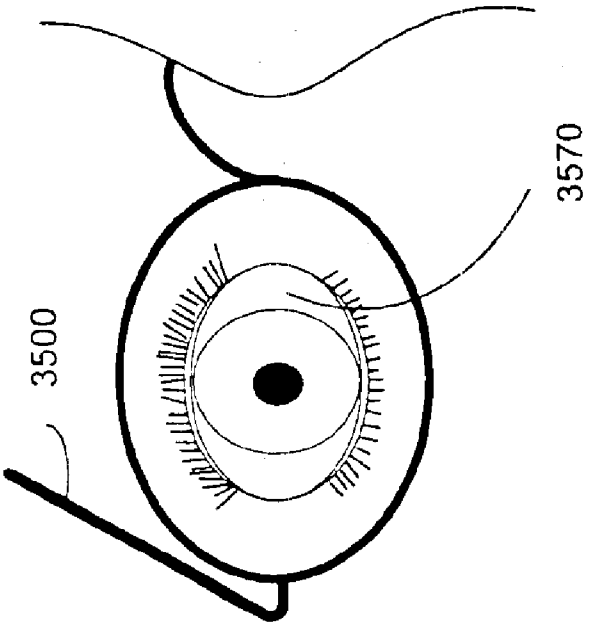

Figure 35a

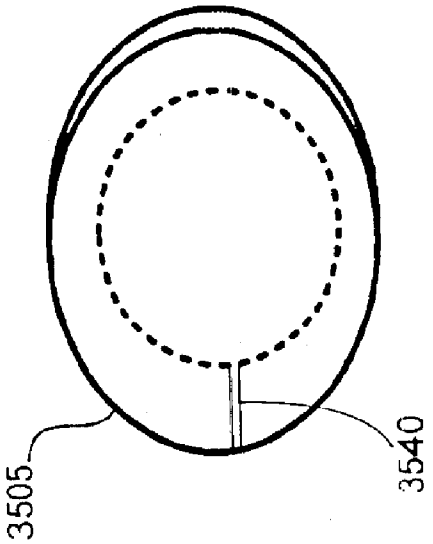

Figure 35d

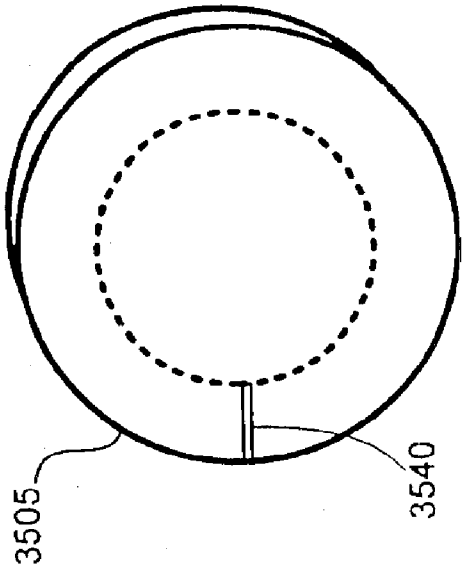

Figure 35c

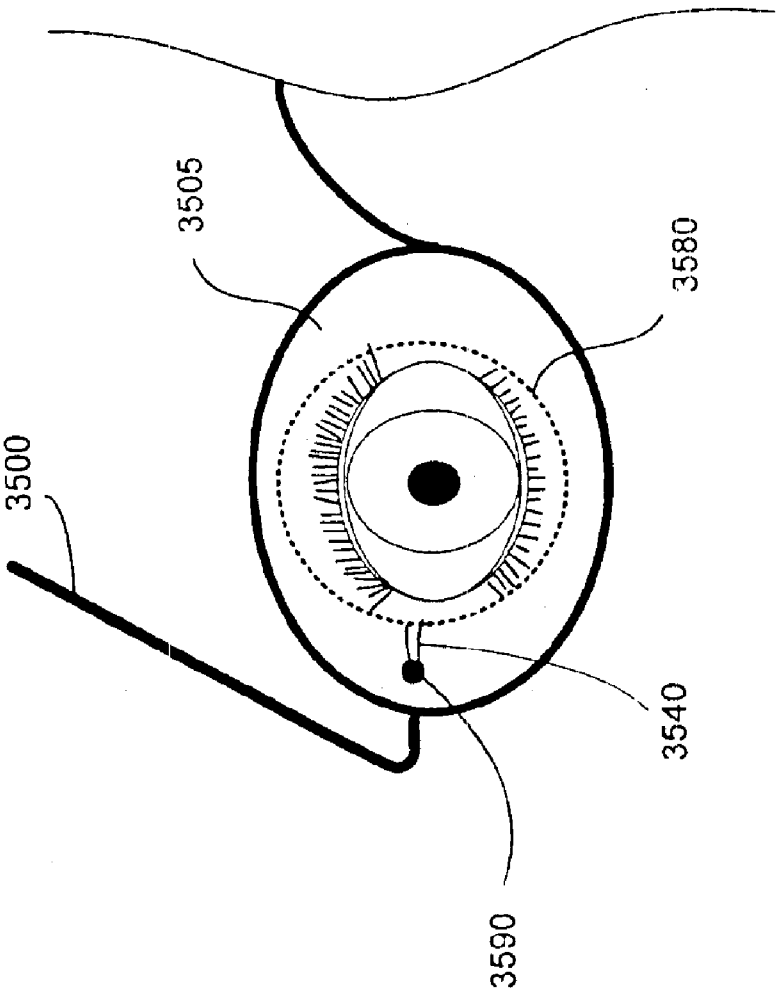

Figure 35e

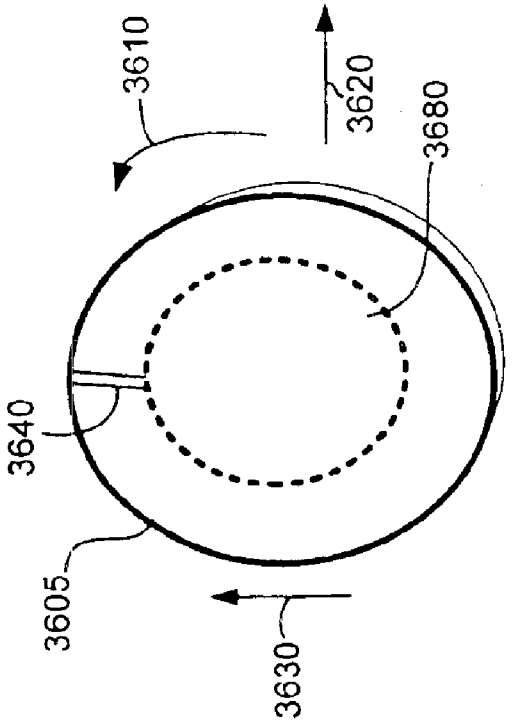

Figure 36b

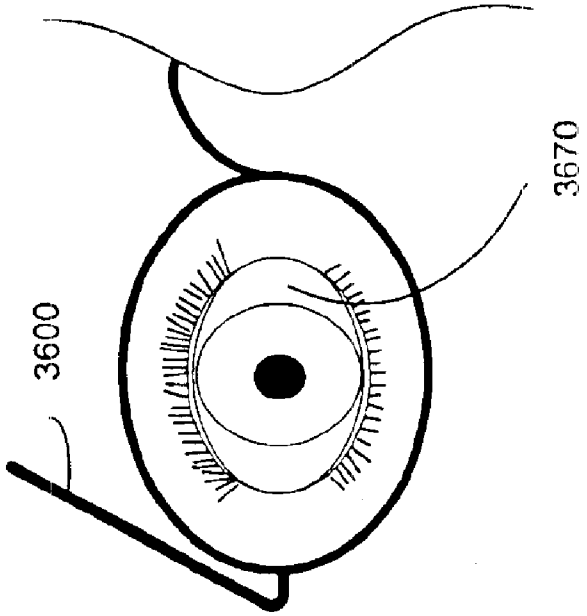

Figure 36a

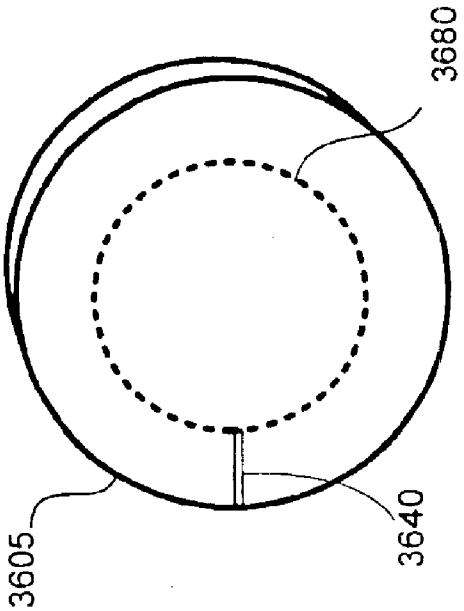

Figure 36c

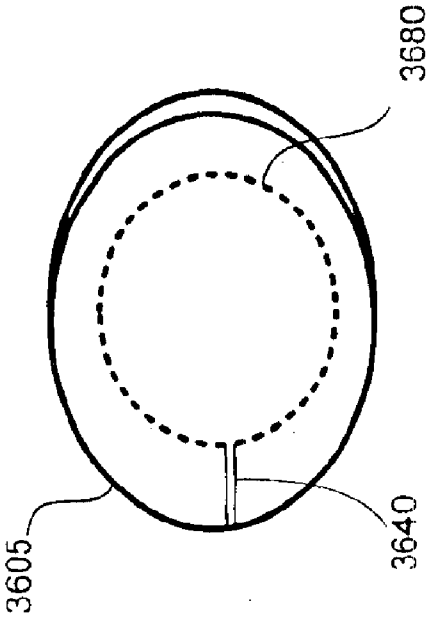

Figure 36d

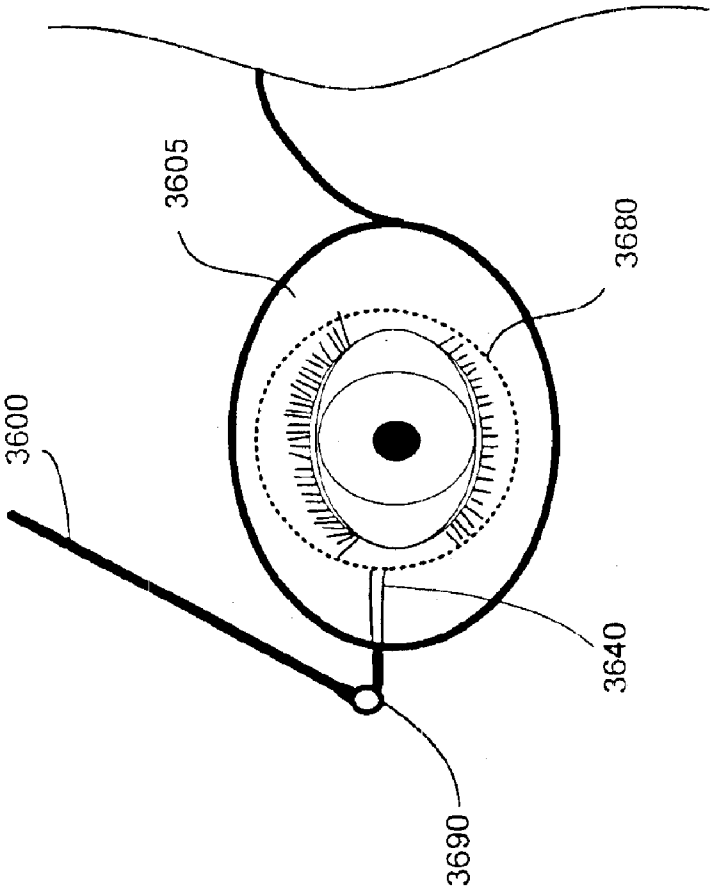

Figure 36e

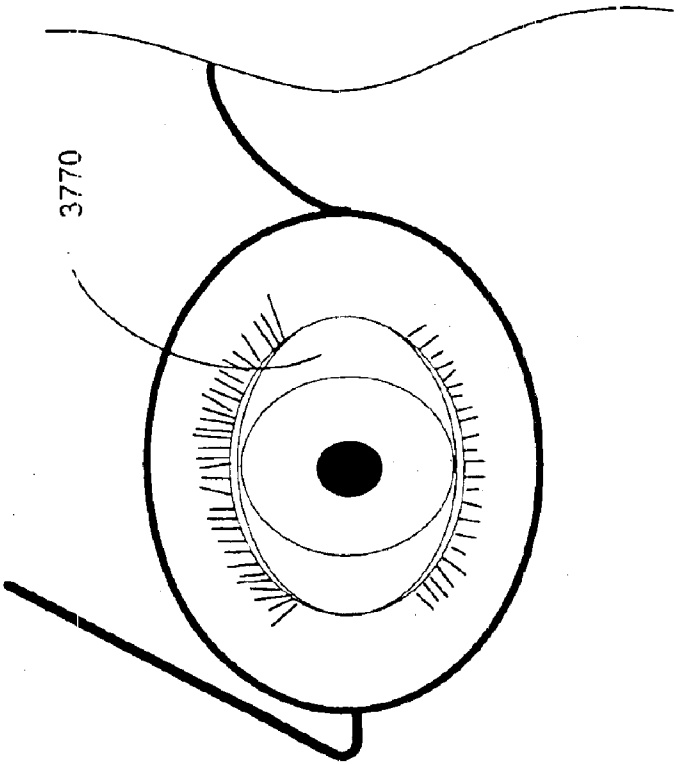

Figure 37b

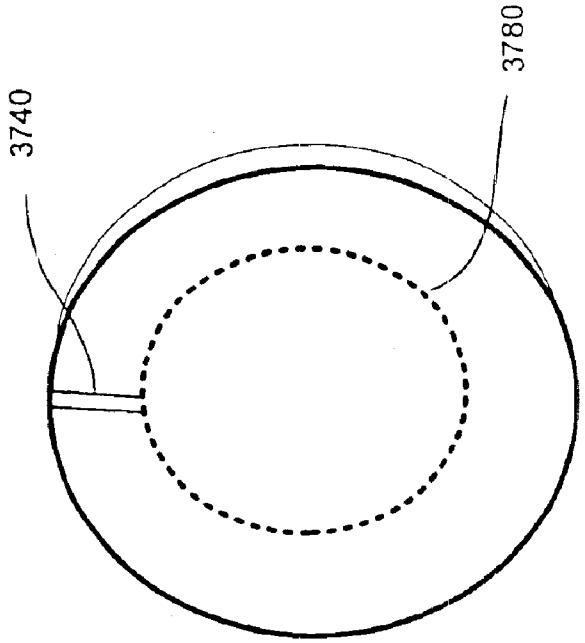

Figure 37a

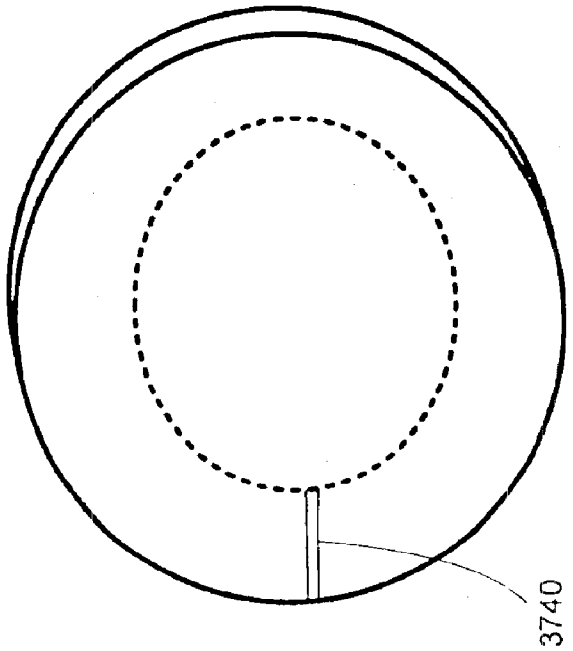

Figure 37d

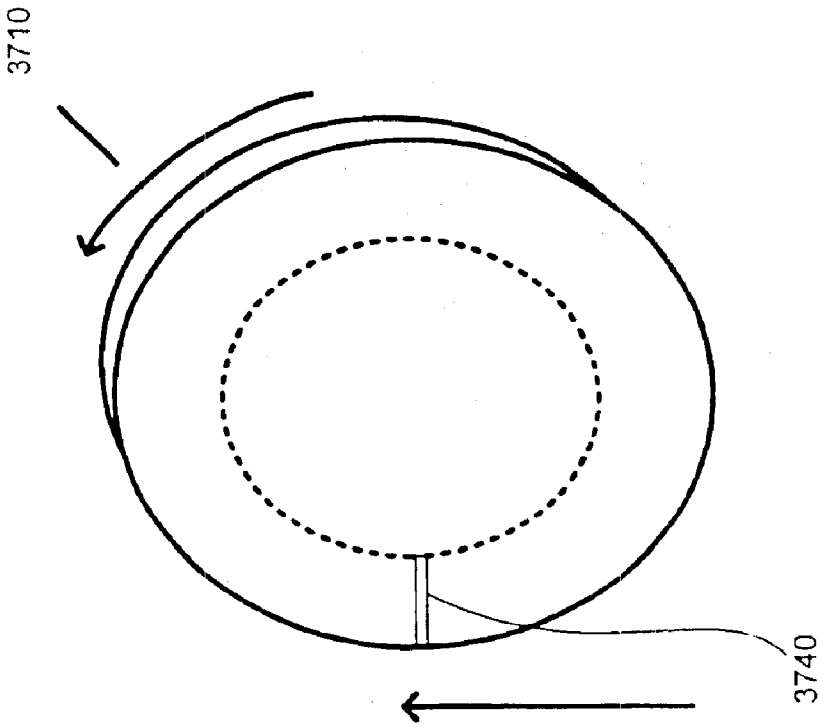

Figure 37c

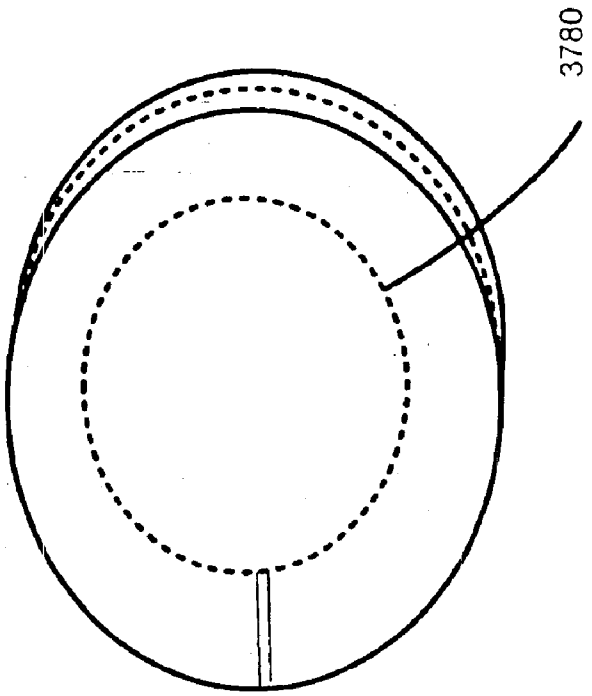

Figure 37f

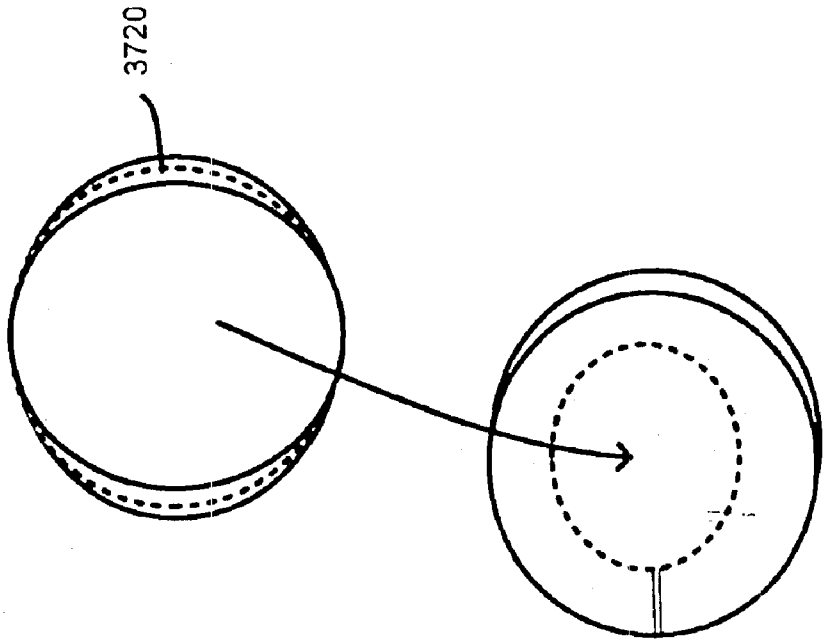

Figure 37e

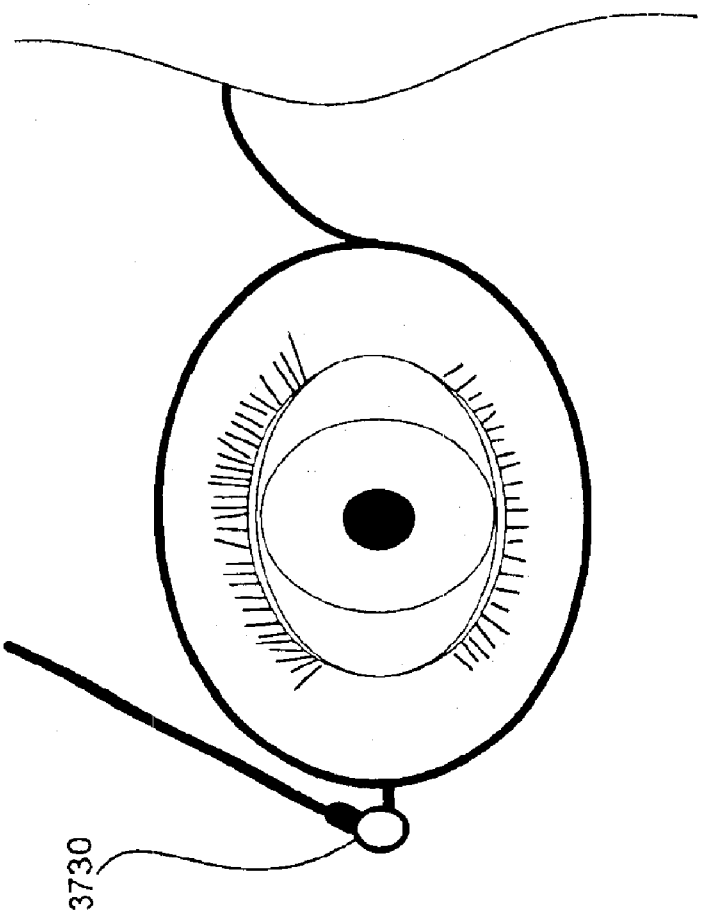

Figure 37g

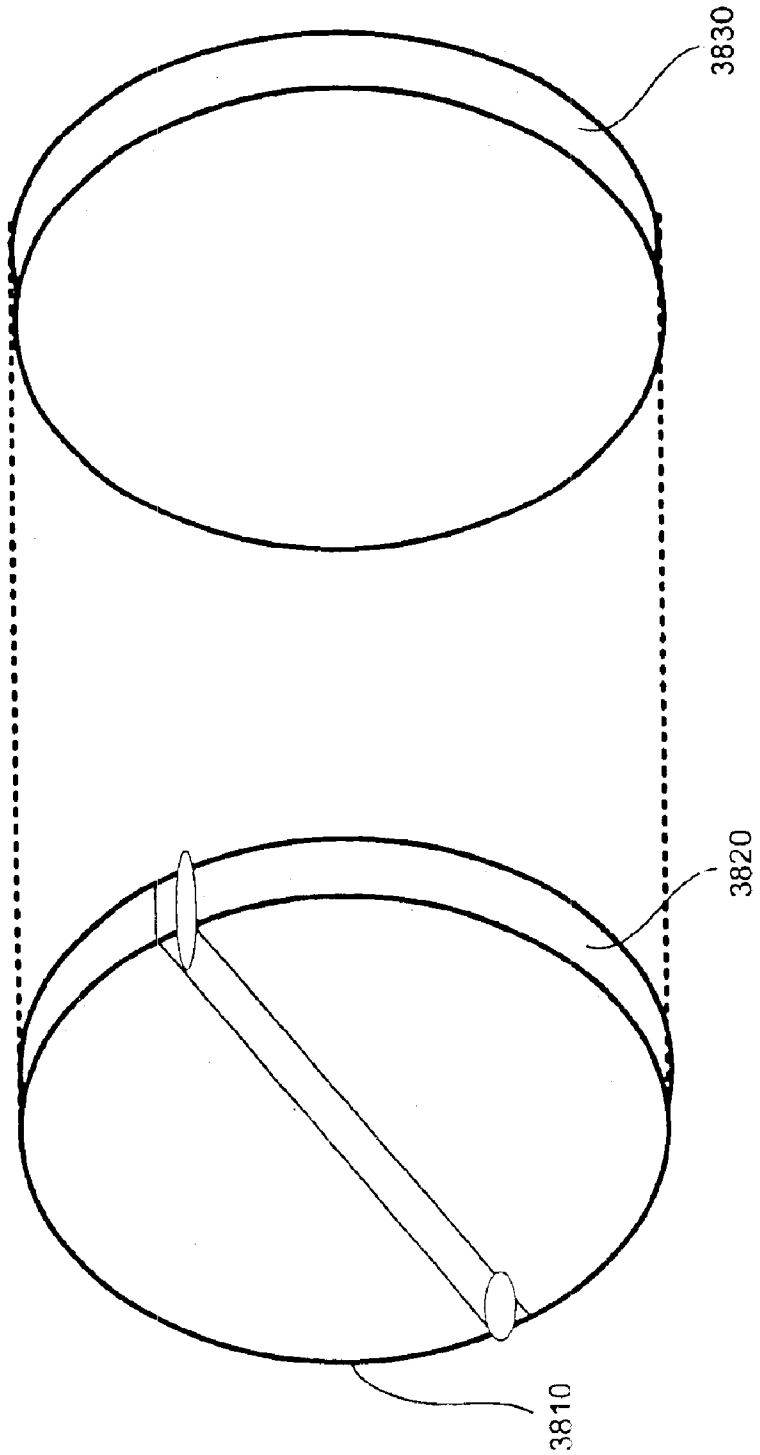

Figure 38

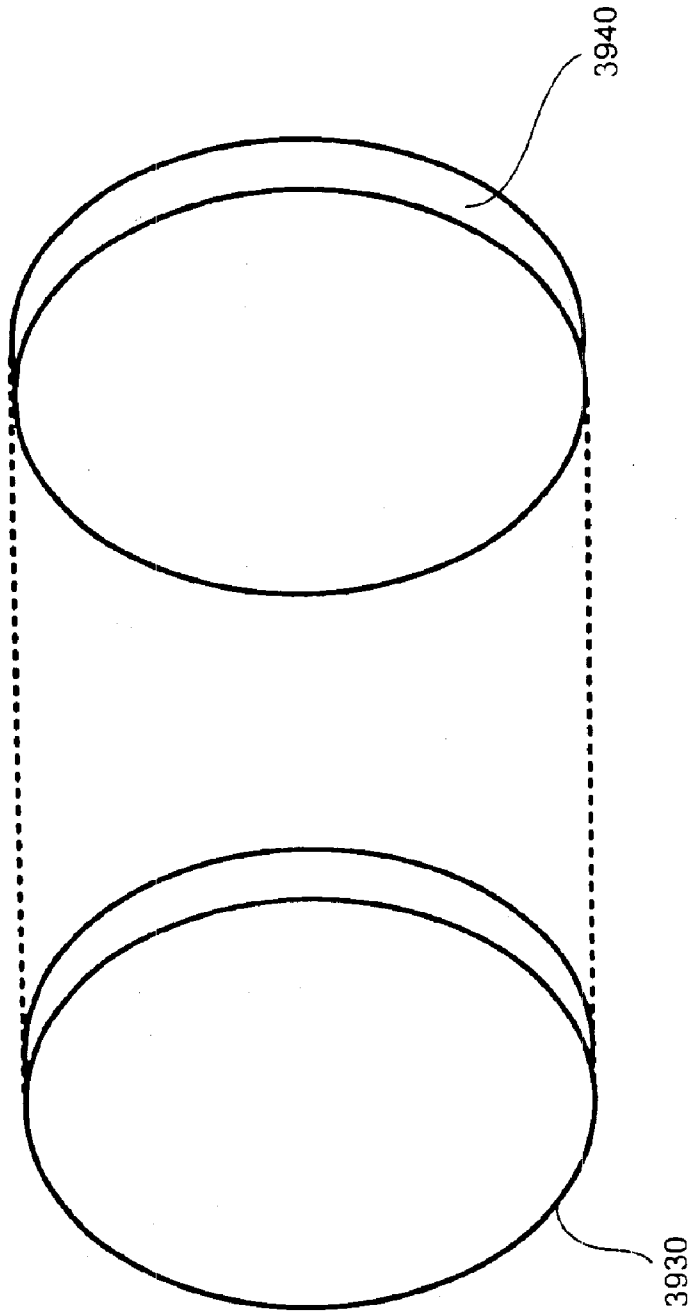

Figure 39

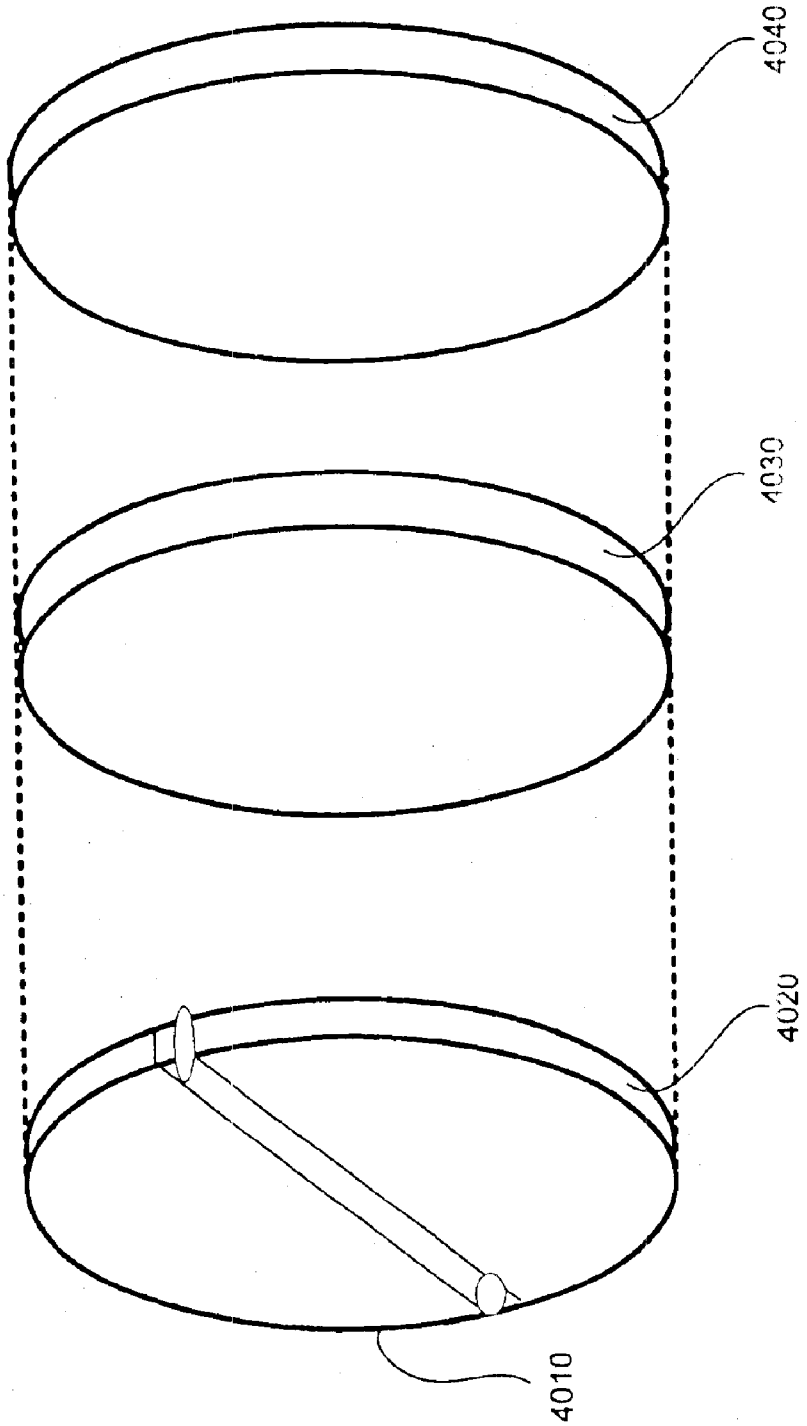

Figure 40

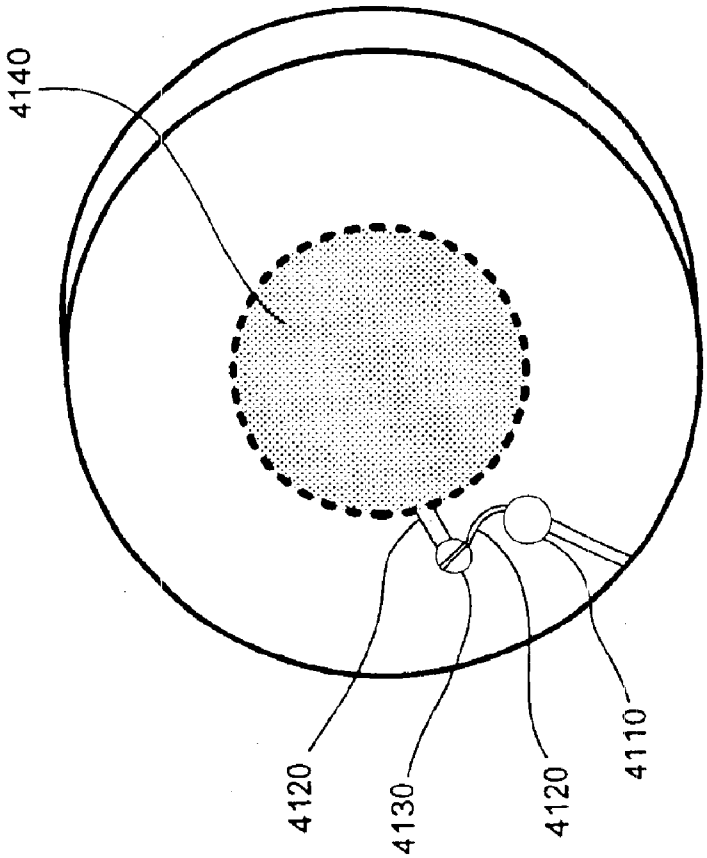

Figure 41

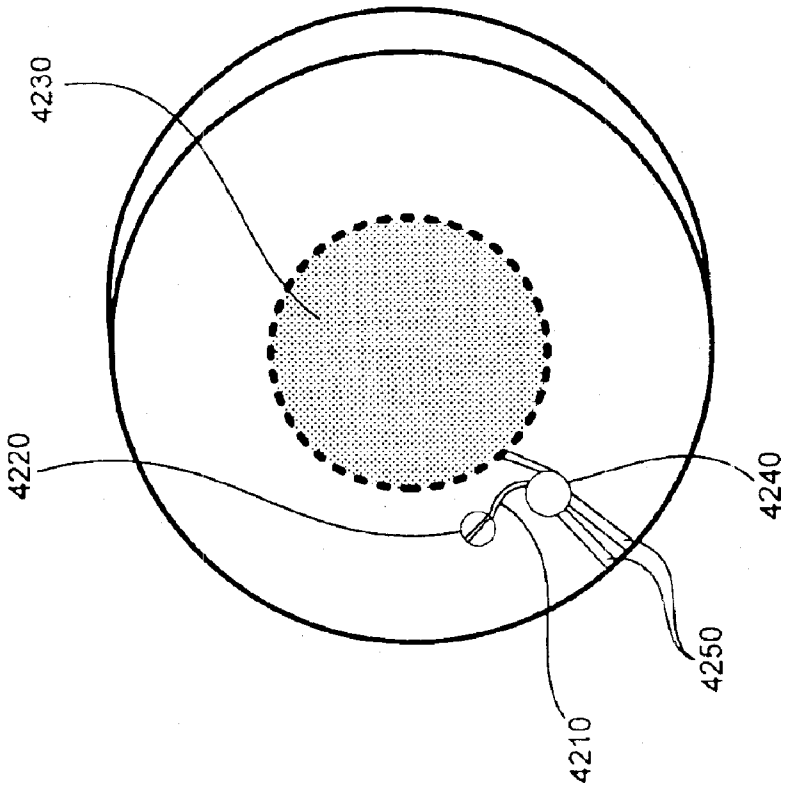

Figure 42

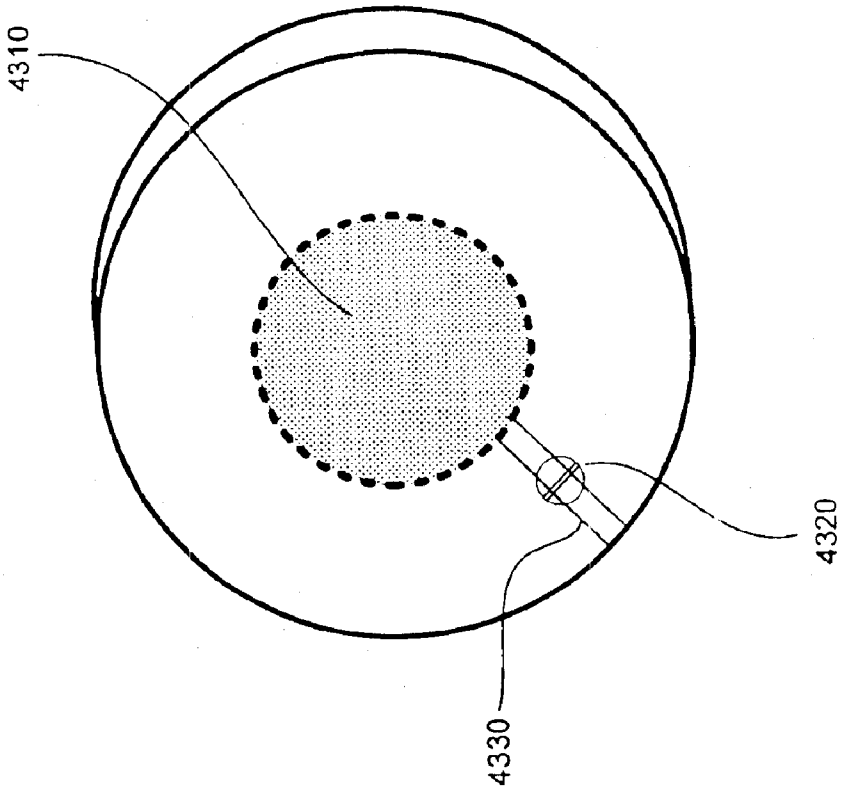

Figure 43

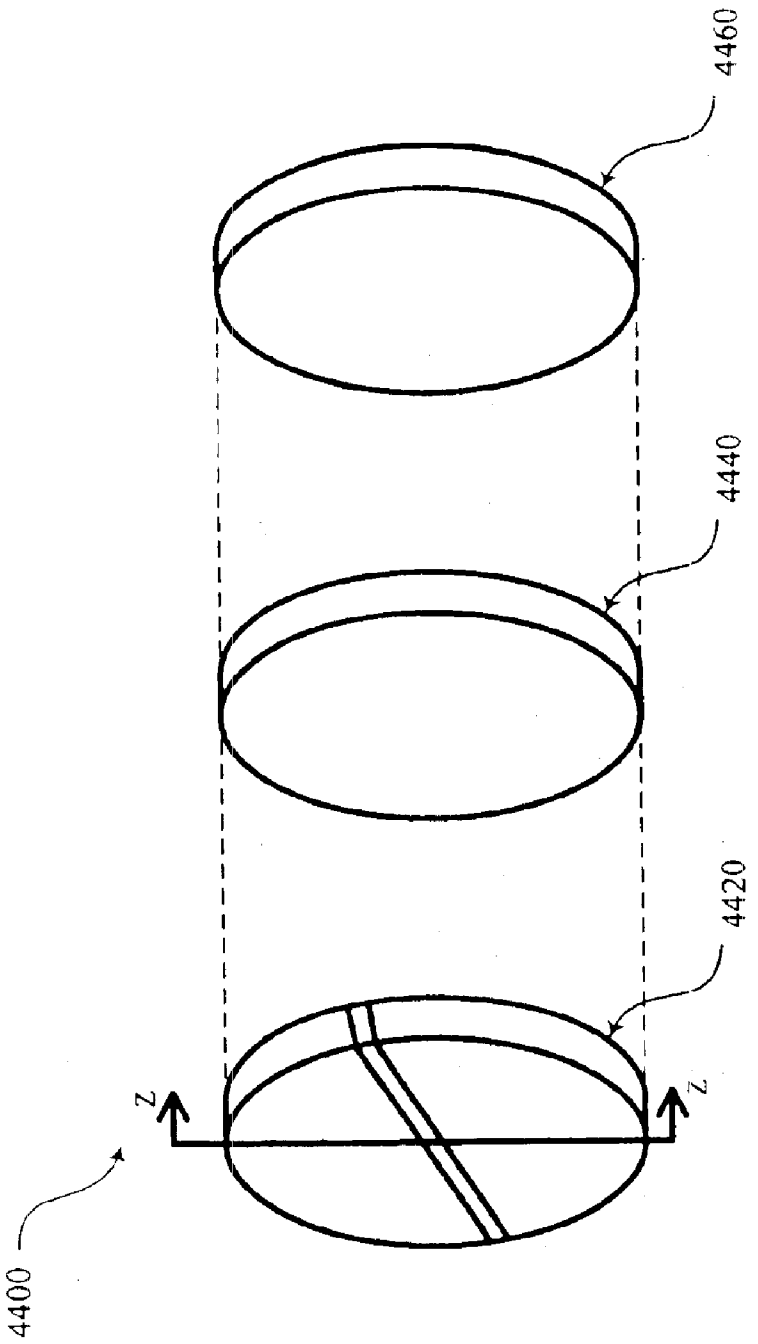

Figure 44a

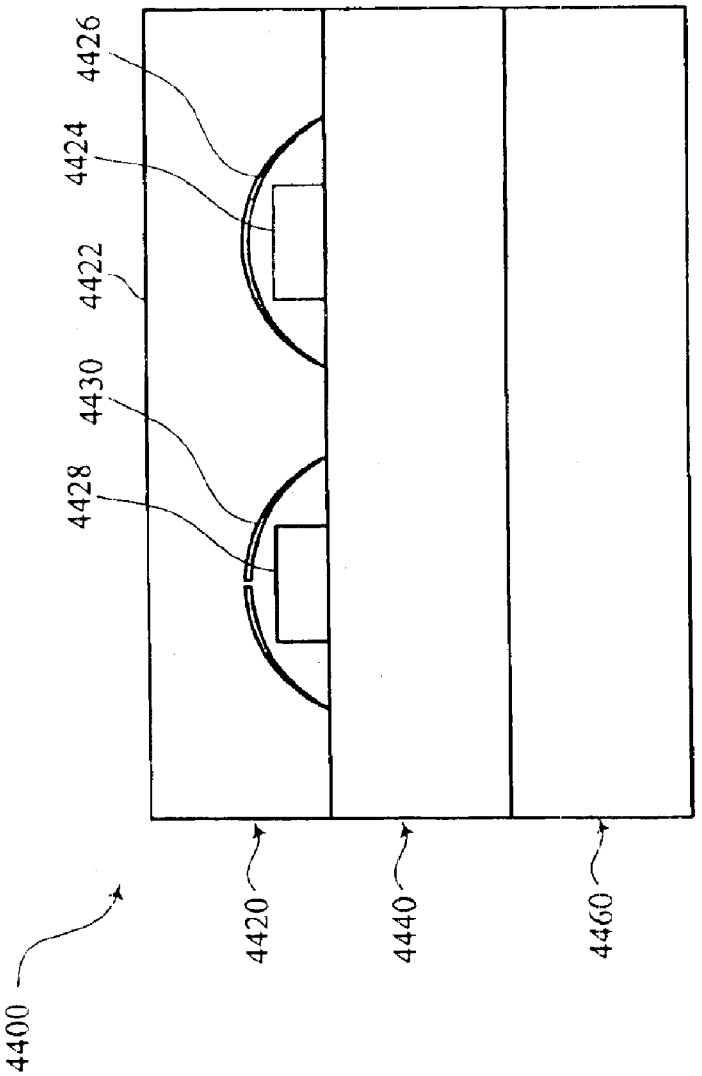

Figure 44b

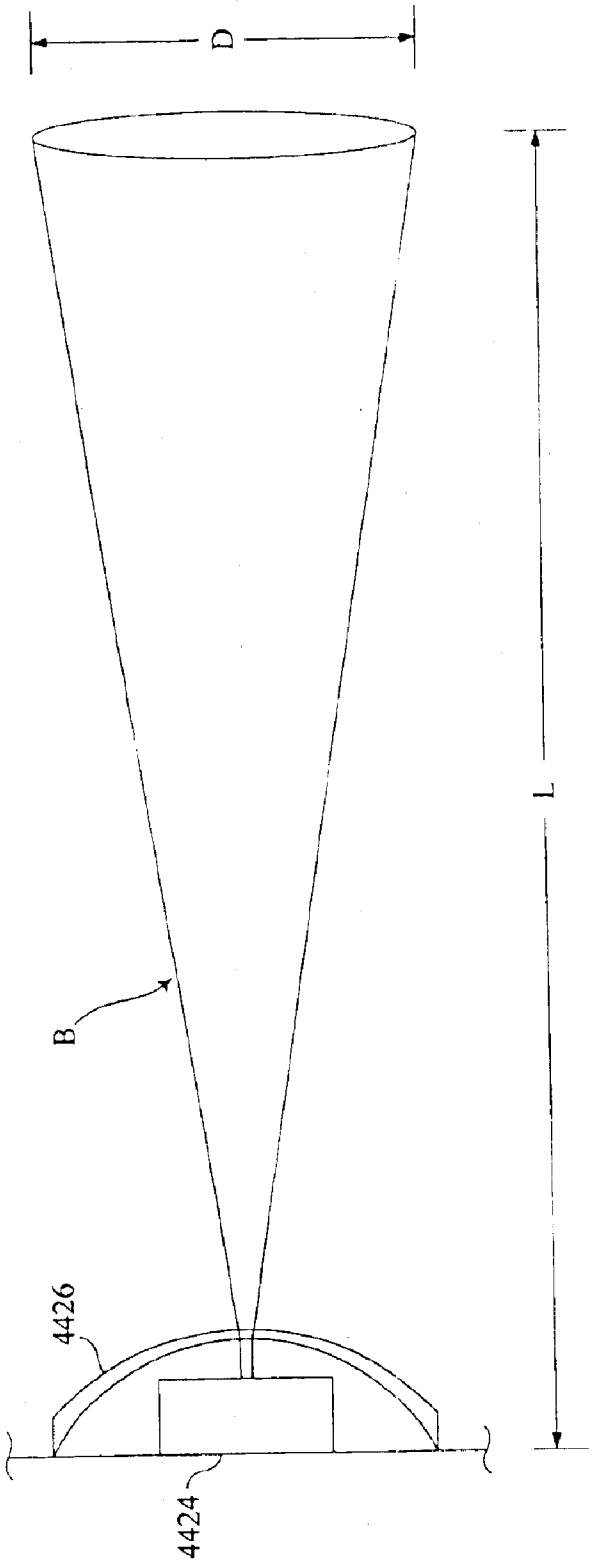

Figure 45

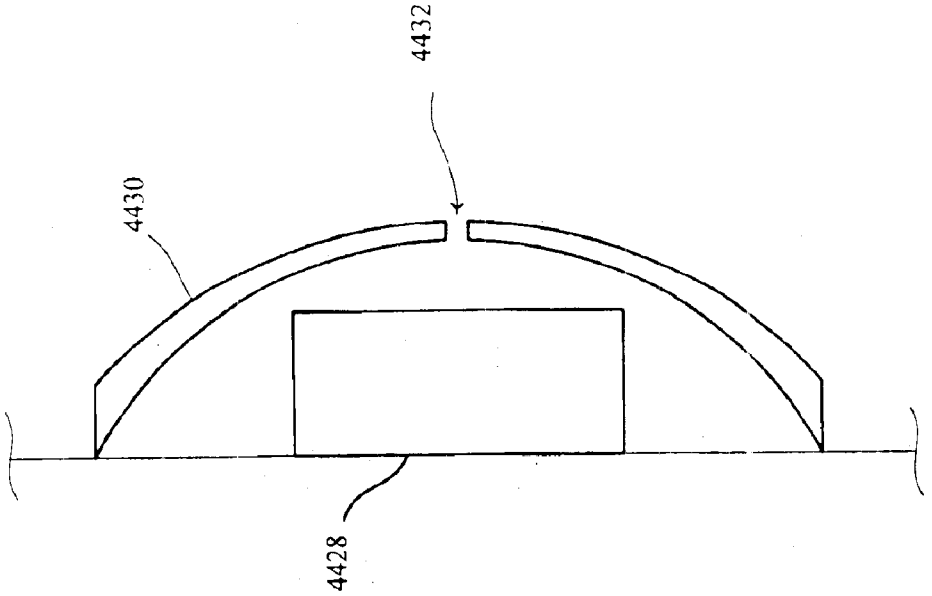

Figure 46

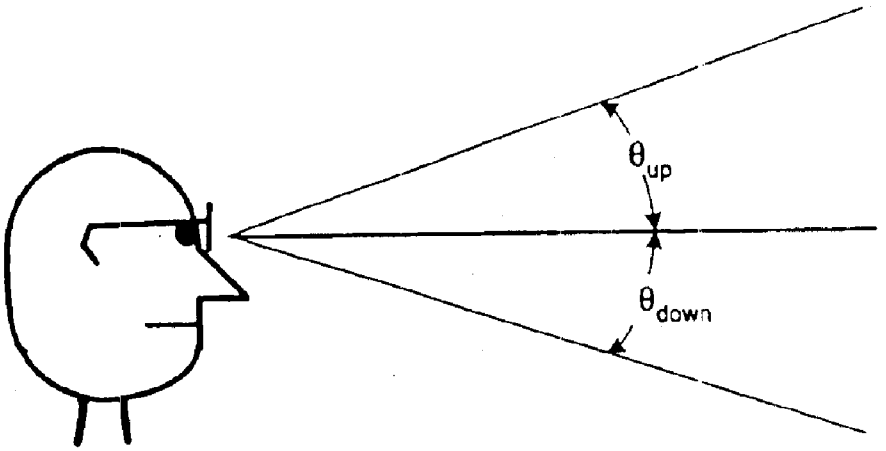

Figure 47a

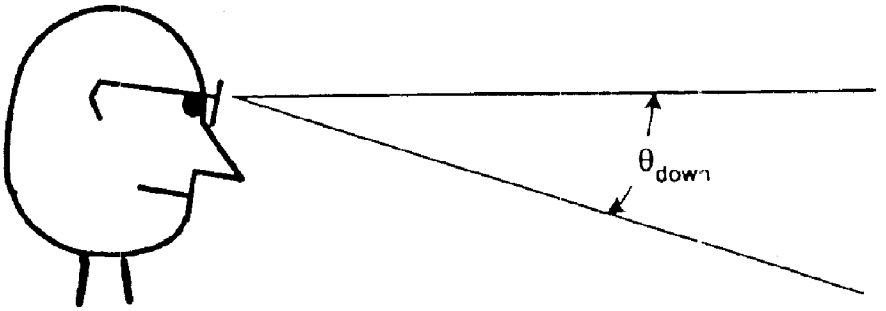

Figure 47b

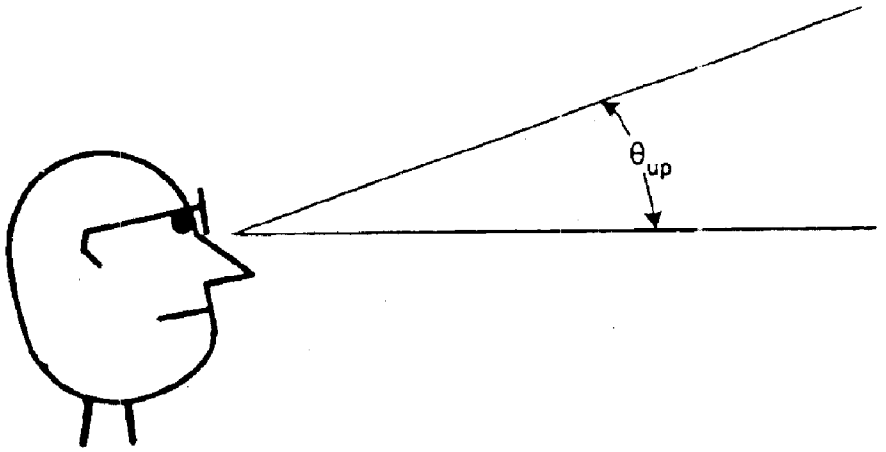

Figure 47c

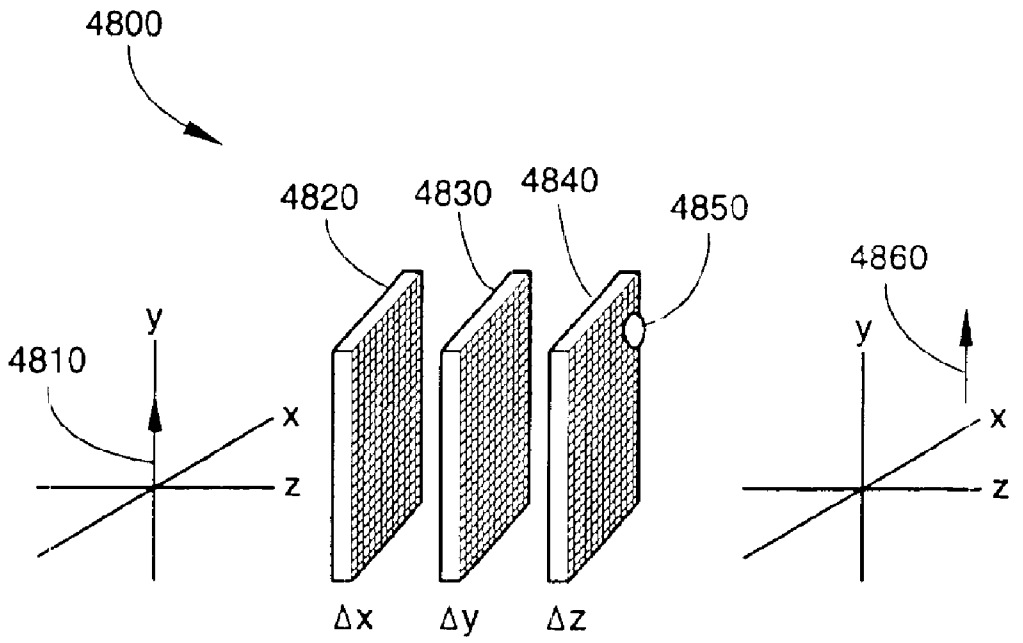

Fig. 48

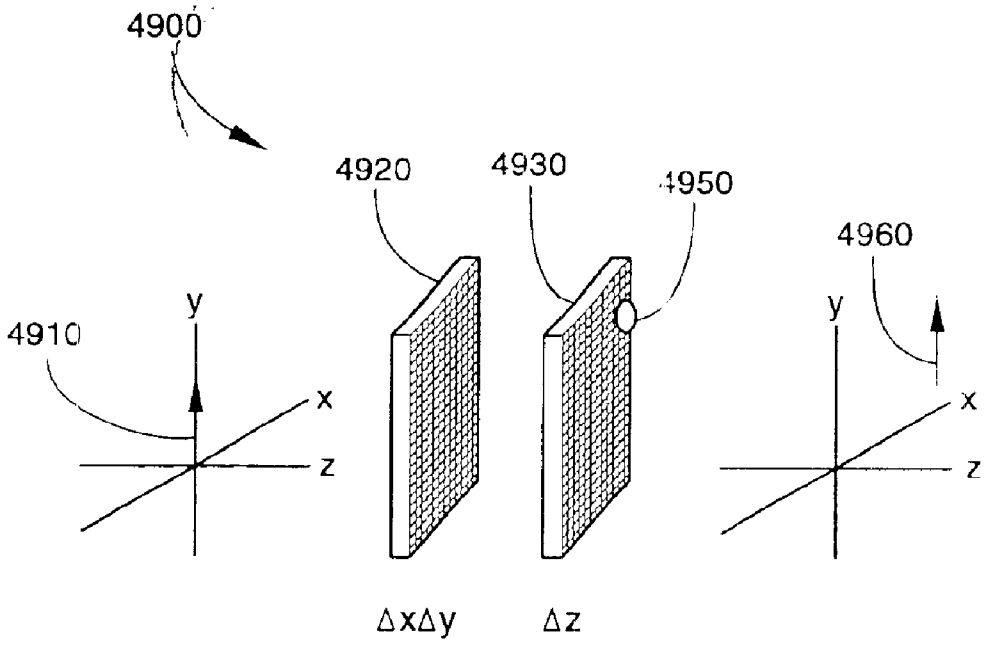

Fig. 49

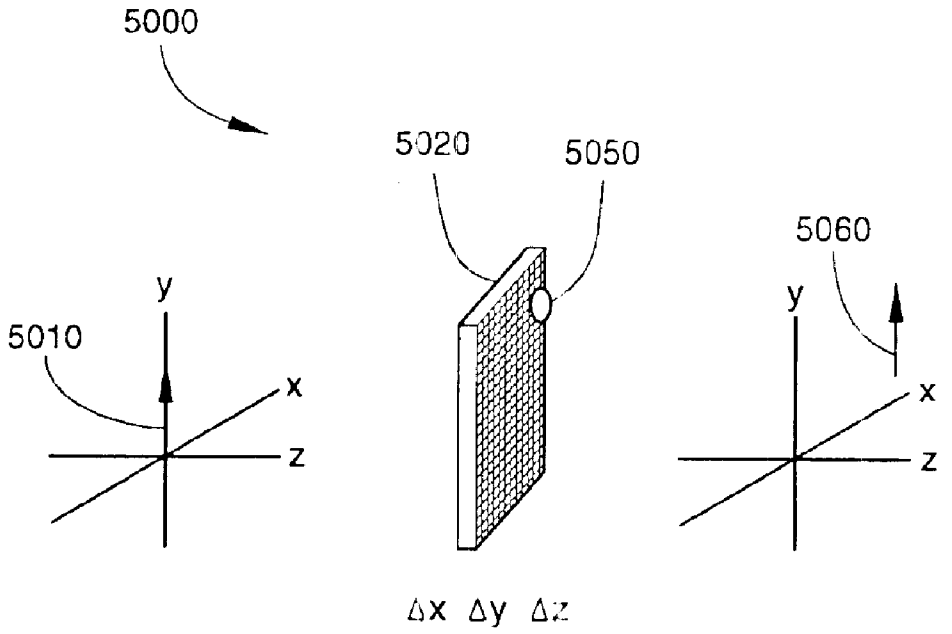

Fig. 50

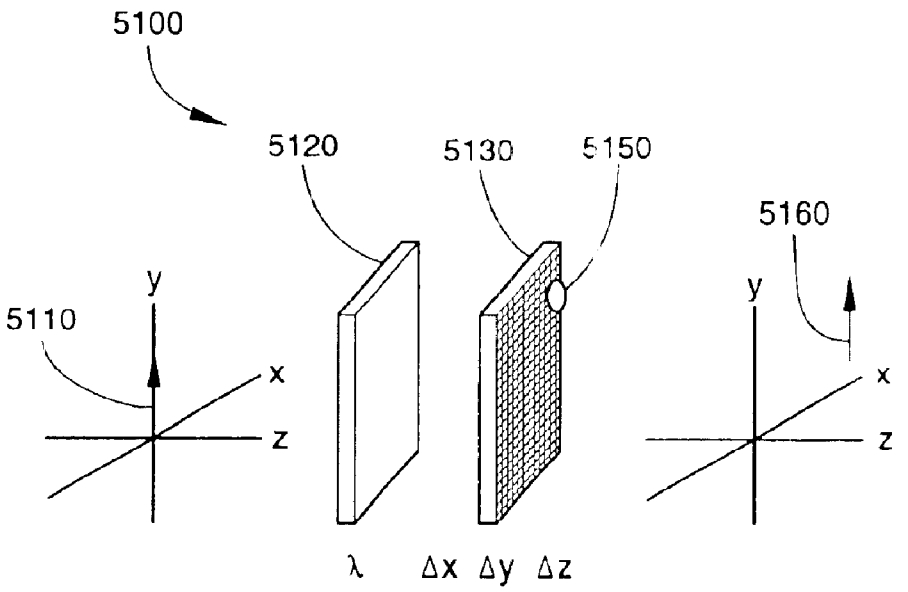

Fig. 51

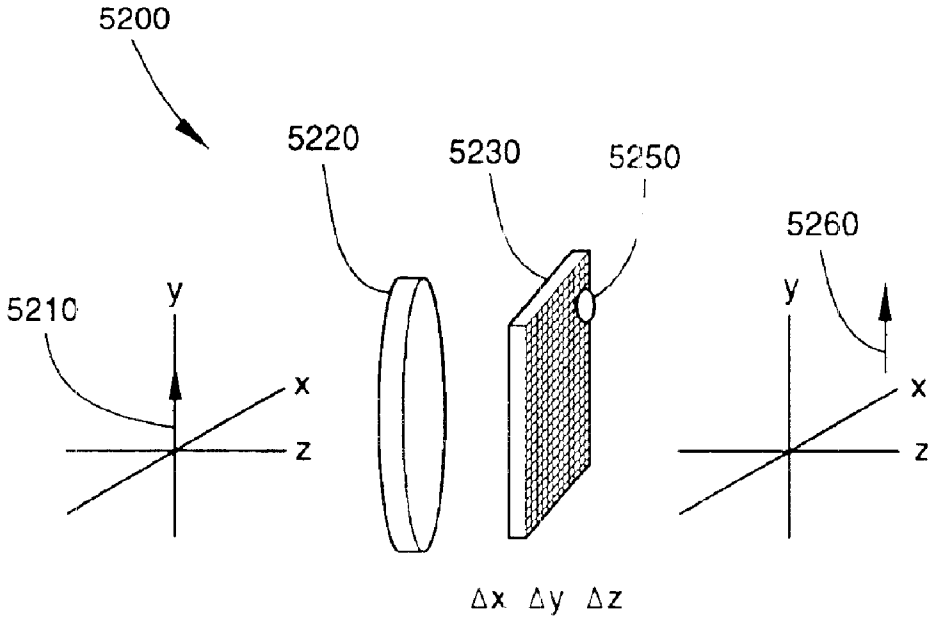

Fig. 52

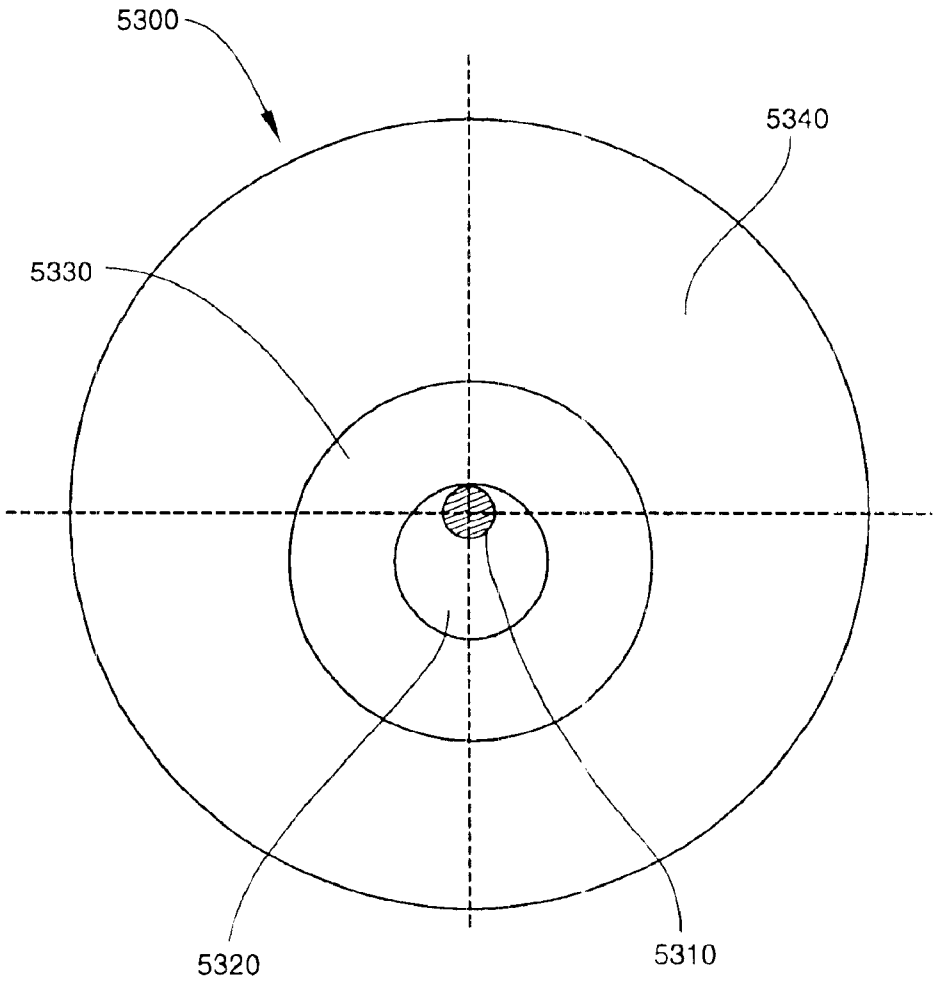

Fig. 53a

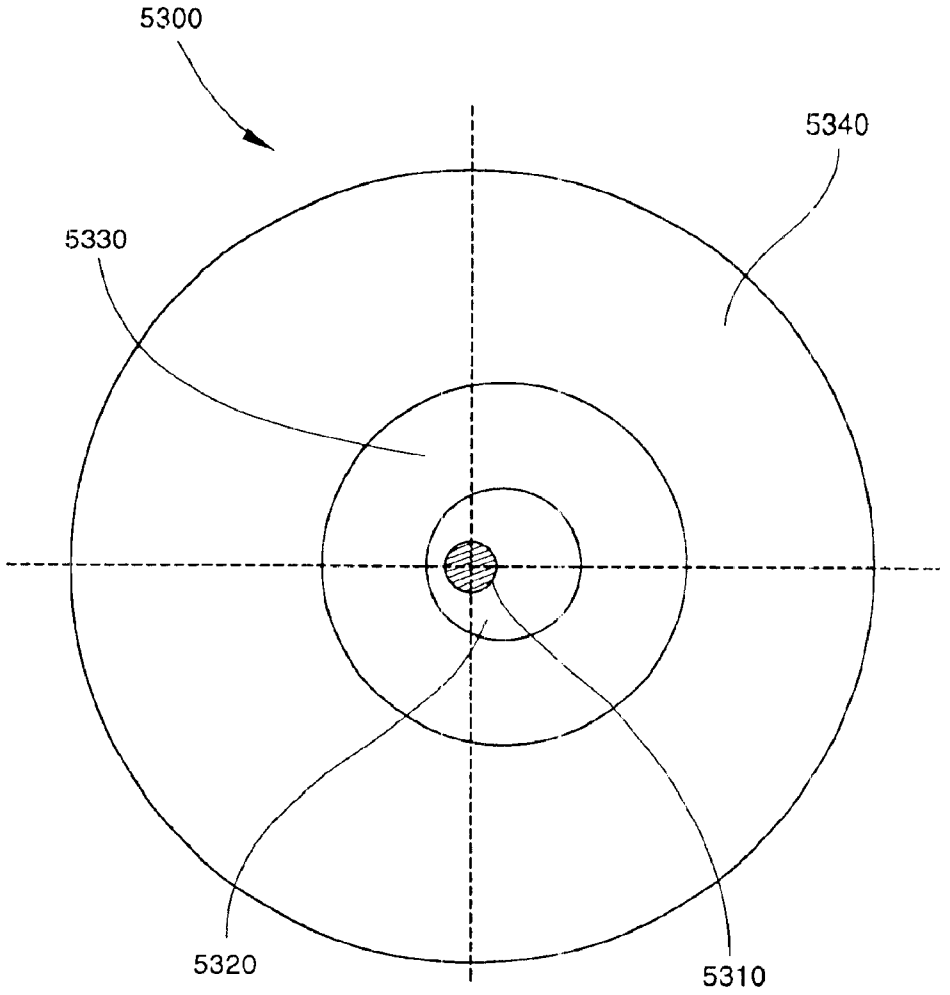

Fig. 53b

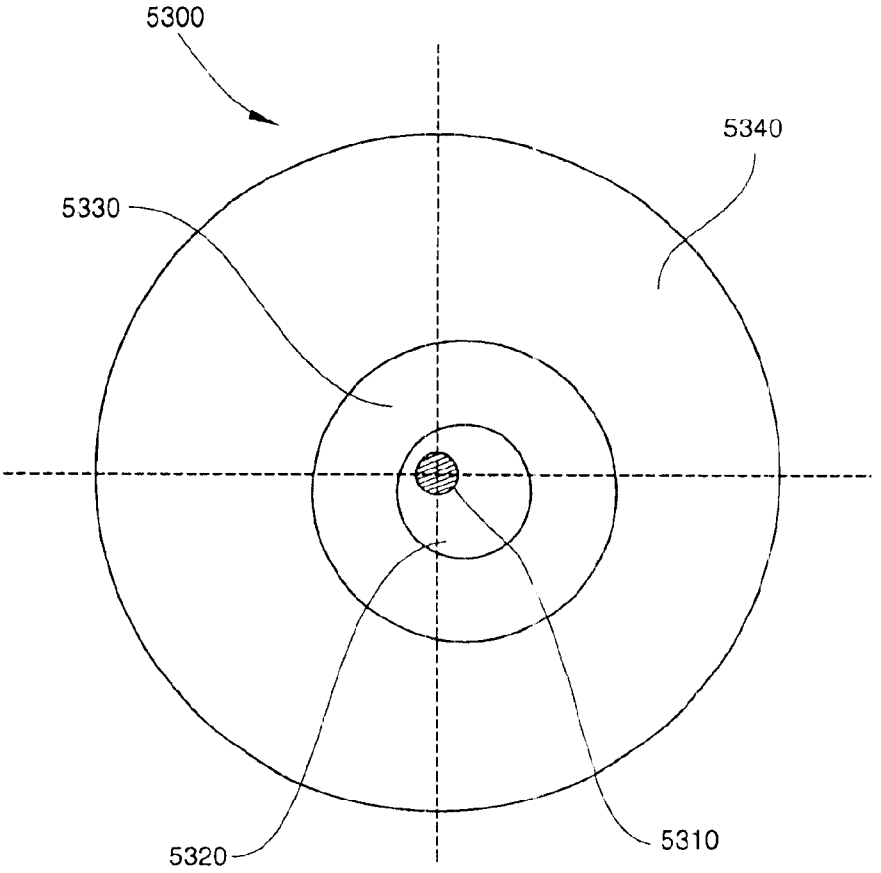

Fig. 53c

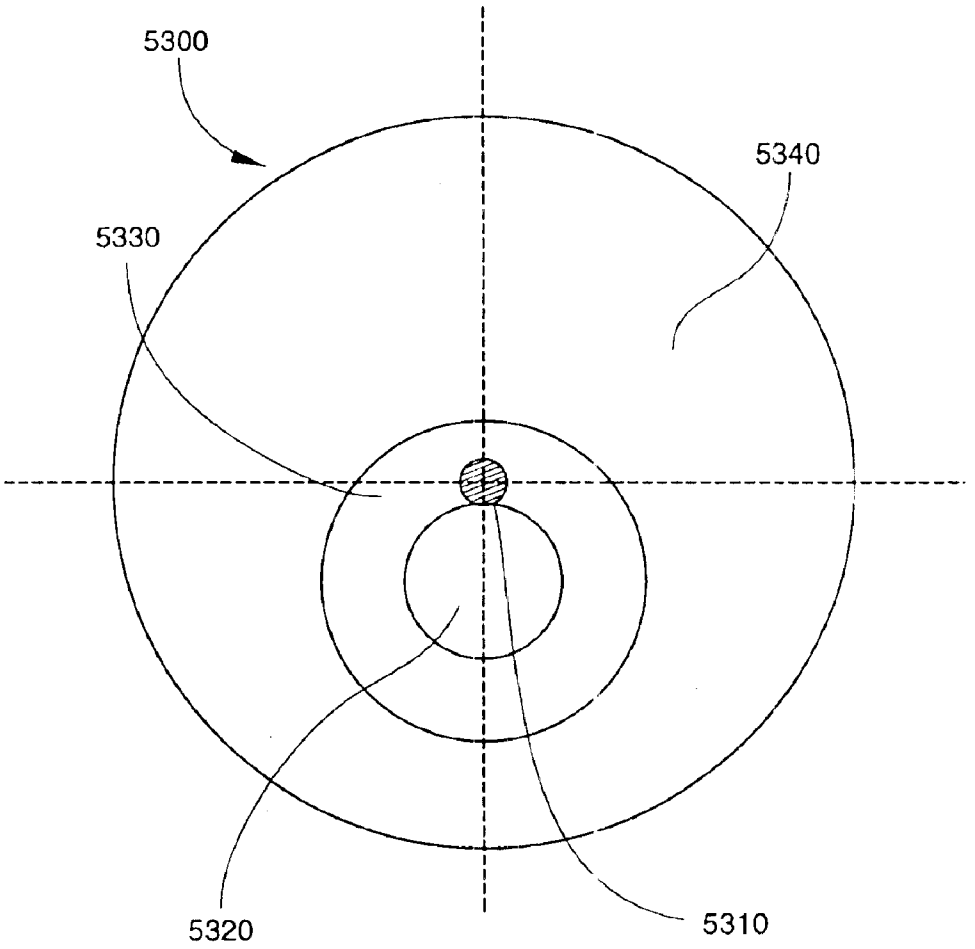

Fig. 53d

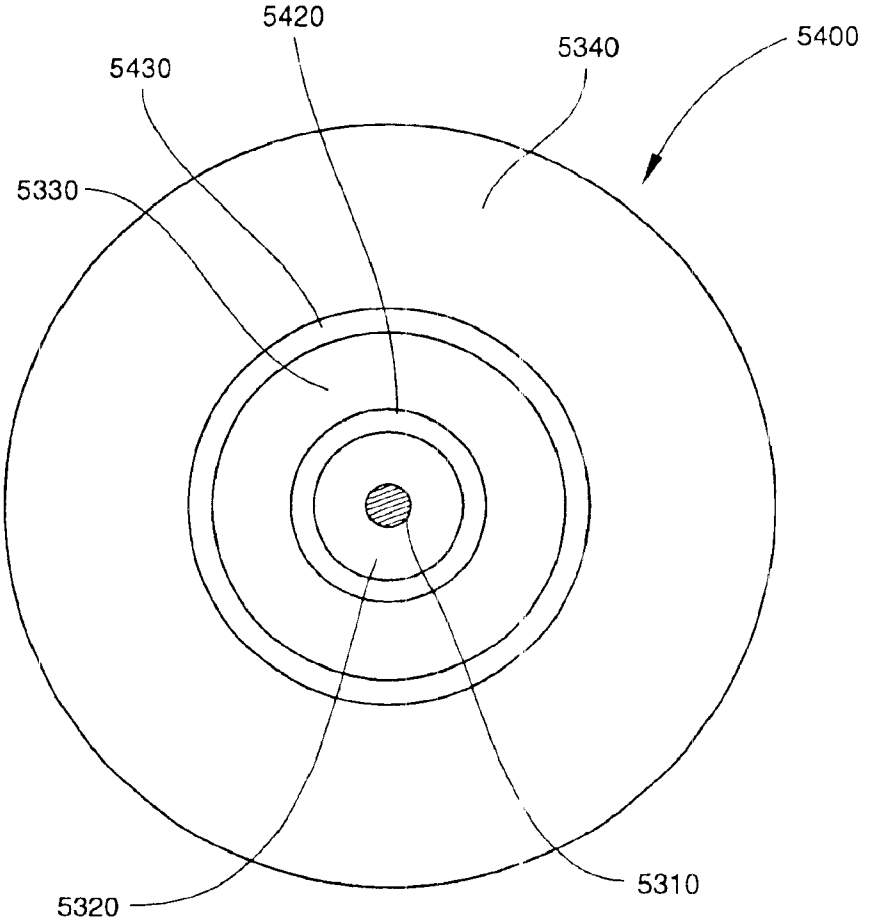

Fig. 54

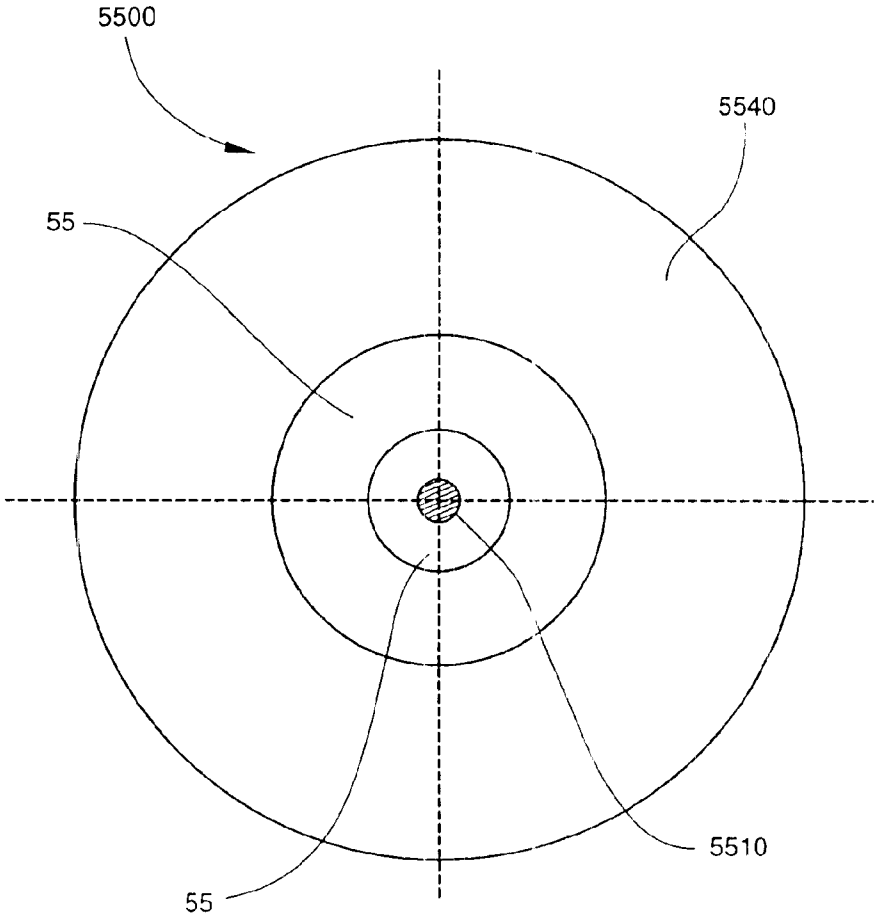

Fig. 55

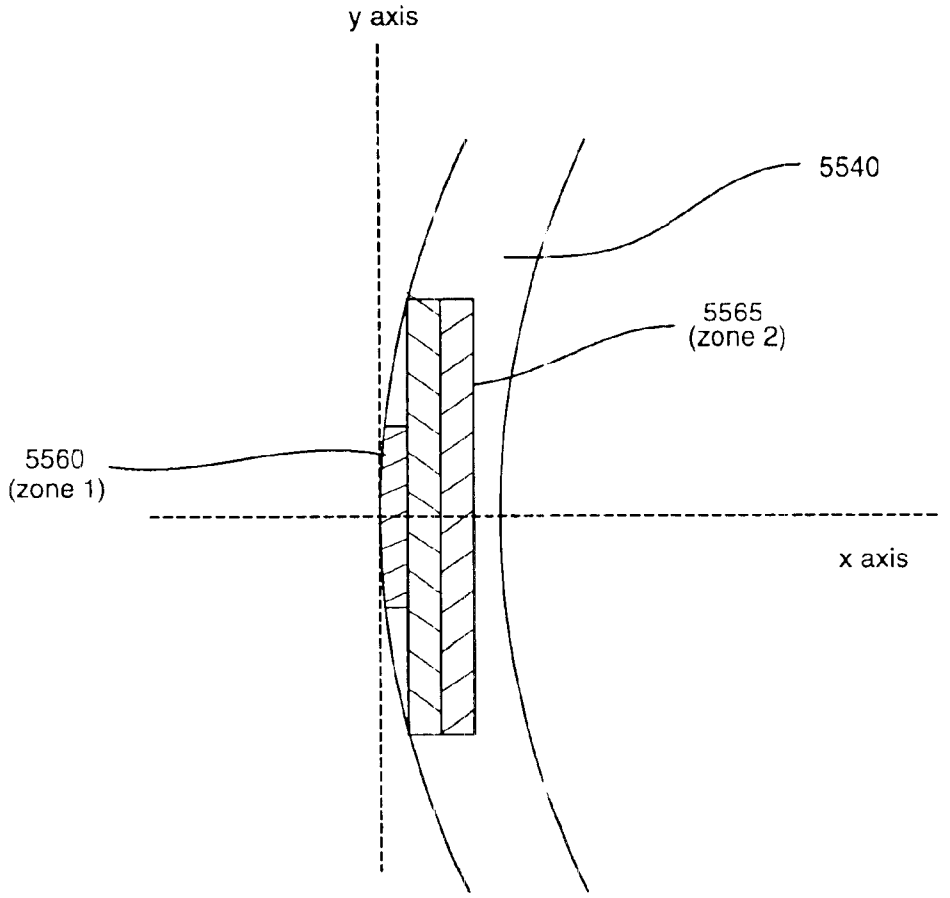

Fig. 55a

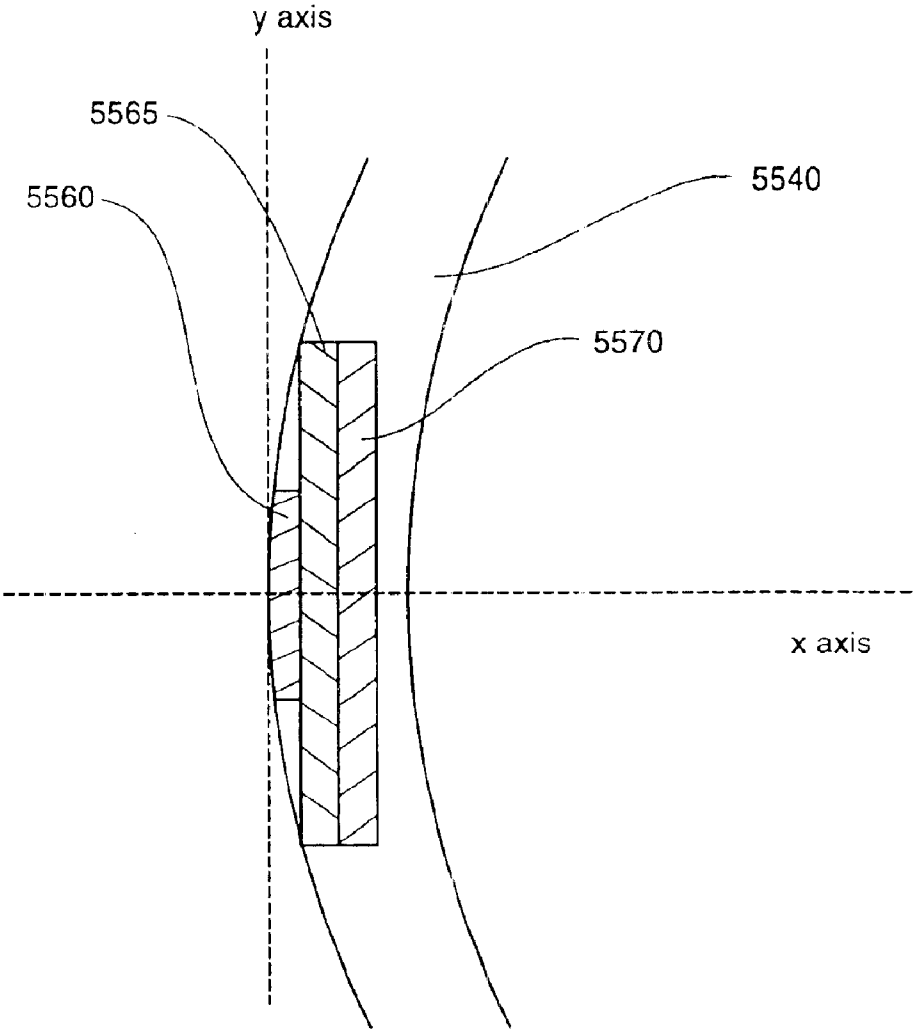

Fig. 55b

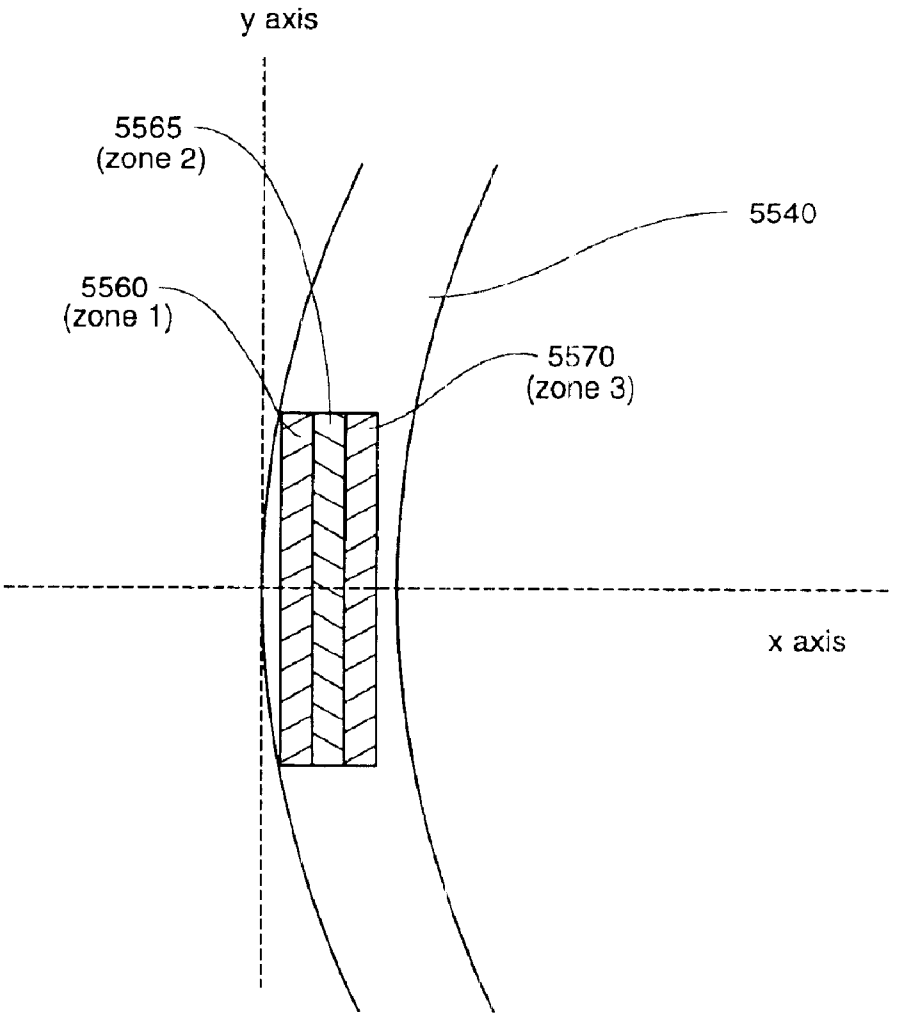

Fig. 55c

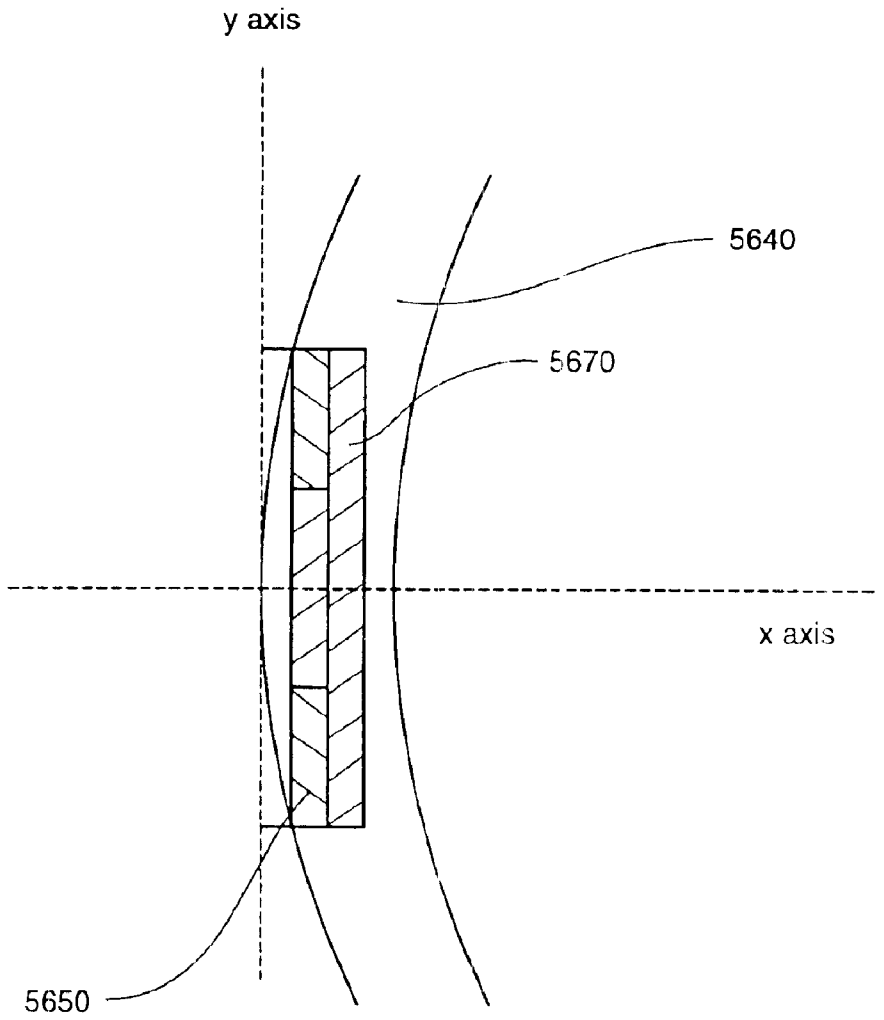

Fig. 56

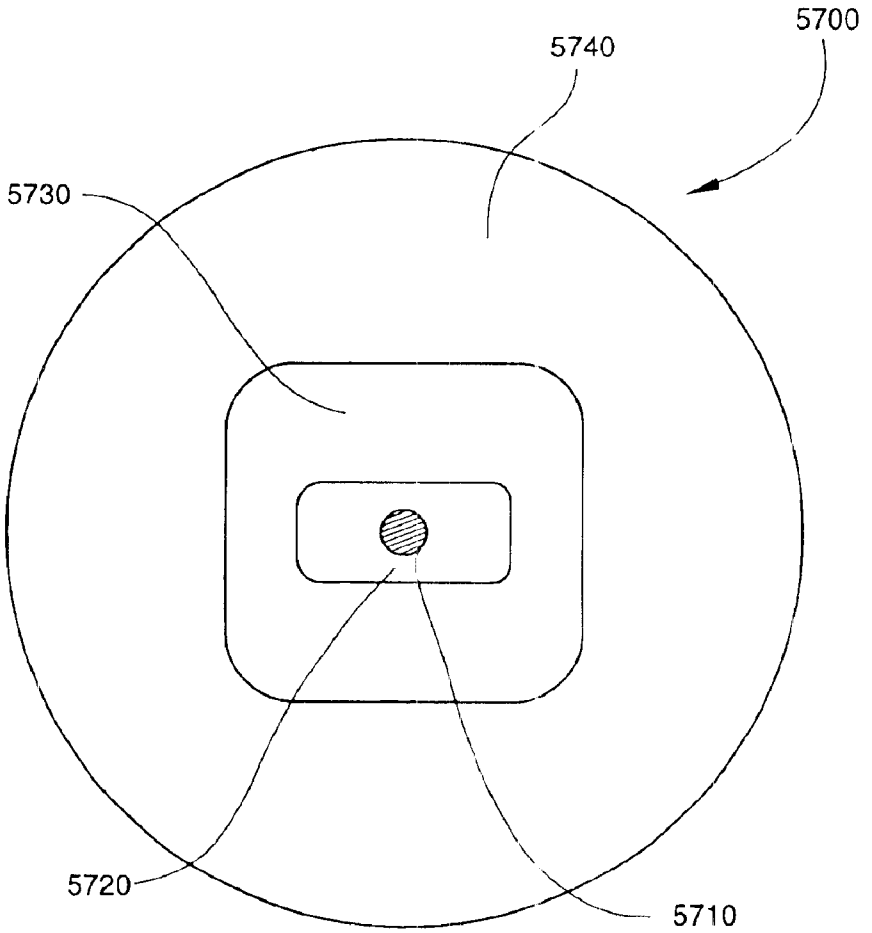

Fig. 57

ELECTRO-ACTIVE MULTI-FOCAL SPECTACLE LENS

RELATED APPLICATIONS

This application claims the benefit of U.S. Provisional Application No. 60/375,028, filed Apr. 25, 2002. This application is also a continuation-in-part of U.S. application Ser. Nos. 10/387,143 filed Mar. 12, 2003, which is a continuation-in-part of U.S. application Ser. No. 10/046,244 filed Jan. 16, 2002, Ser. No. 10/263 707 filed Oct. 4, 2002, and Ser. No. 10/281,204 filed Oct. 28, 2002 now U.S. Pat. No. 6,733,130. All of the foregoing applications are incorporated by reference herein in their entirety.

FIELD OF THE INVENTION

The present invention relates to the field of optics. More particularly, the present invention relates to vision correction with a multi-focal electro-active spectacle lens.

SUMMARY OF THE INVENTION

In accordance with one embodiment of the invention, a multi-focal electro active spectacle is disclosed. The spectacle comprises an electro-active lens comprising a stack of at least two electro-active regions to produce a plurality of zones with different viewing corrections and a controller for independently activating each electro-active region to produce the plurality of zones with different viewing corrections.

In accordance with another embodiment of the invention, a multi-focal electro-active spectacle is disclosed. The electro-active spectacle comprises an electro-active lens comprising at least one electro-active region to produce a plurality of zones with different viewing corrections and at least one blending zone between the plurality of vision correction zones and a controller for independently activating each electro-active region to produce the plurality of zones for vision correction and the at least one blending zone.

In accordance with another embodiment of the invention, an electro-active lens is disclosed. The lens comprises two stacked electro-active regions in which a first region produces a near and near-intermediate viewing correction zone when activated and in which a second region produces a far-intermediate viewing correction zone when activated. The lens also comprises a controller for independently activating each electro-active region.

BRIEF DESCRIPTION OF THE DRAWINGS

The present invention can be more fully understood by reading the following detailed description of the presently preferred embodiments together with the accompanying drawings, in which like reference indicators are used to designate like elements, and in which:

FIG. **1** is a perspective view of an embodiment of an electro-active phoropter/refractor system **100**.

FIG. **2** is a diagrammatic view of an embodiment of another electro-active phoropter/refractor system **200**.

FIG. **3** is a flow diagram of a conventional dispensing practice sequence **300**.

FIG. **4** is a flow diagram of an embodiment of dispensing method **400**.

FIG. **5** is a perspective view of an embodiment of electro-active eyewear **500**.

FIG. **6** is a flow diagram of an embodiment of prescription method **600**.

FIG. **7** is a front view of an embodiment of a hybrid electro-active spectacle lens **700**.

FIG. **8** is a section view of an embodiment of hybrid electro-active spectacle lens **700** taken along section line A—A of FIG. **7**.

FIG. **9** is a section view of an embodiment of an electro-active lens **900**, taken along section line Z—Z of FIG. **5**.

FIG. **10** is a perspective view of an embodiment of an electro-active lens system **1000**.

FIG. **11** is a section view of an embodiment of a diffractive electro-active lens **1100** taken along section line Z—Z of FIG. **5**.

FIG. **12** is a front view of an embodiment of an electro-active lens **1200**.

FIG. **13** is a section view of an embodiment of the electro-active lens **1200** of FIG. **12** taken along section line Q—Q.

FIG. **14** is a perspective view of an embodiment of a tracking system **1400**.

FIG. **15** is a perspective view of an embodiment of an electro-active lens system **1500**.

FIG. **16** is a perspective view of an embodiment of an electro-active lens system **1600**.

FIG. **17** is a perspective view of an embodiment of an electro-active lens **1700**.

FIG. **18** is a perspective view of an embodiment of an electro-active lens **1800**.

FIG. **19** is a perspective view of an embodiment of an electro-active refractive matrix **1900**.

FIG. **20** is a perspective view of an embodiment of an electro-active lens **2000**.

FIG. **21** is a perspective view of an embodiment of electro-active eyewear **2100**.

FIG. **22** is a front view of an embodiment of an electro-active lens **2200**.

FIG. **23** is a front view of an embodiment of an electro-active lens **2300**.

FIG. **24** is a front view of an embodiment of an electro-active lens **2400**.

FIG. **25** is a section view of an embodiment of an electro-active lens **2500** taken along section line Z—Z of FIG. **5**.

FIG. **26** is a section view of an embodiment of an electro-active lens **2600** taken along section line Z—Z of FIG. **5**.

FIG. **27** is a flow diagram of an embodiment of dispensing method **2700**.

FIG. **28** is a perspective view of an embodiment of an electro-active lens **2800**.

FIG. **29** is a perspective view of an optical lens system in accord with another alternative embodiment of the present invention.

FIG. **30** is a perspective view of an optical lens system in accord with another alternative embodiment of the present invention.

FIG. **31** is a perspective view of an optical lens system in accord with another alternative embodiment of the present invention.

FIG. **32** is a perspective view of an optical lens system in accord with another alternative embodiment of the present invention.

FIG. **33** is an exploded perspective view of an optical lens system in accord with another alternative embodiment of the present invention.

FIG. **34** is an exploded perspective view of an optical lens system in accord with another alternative embodiment of the present invention.

FIGS. **35***a*–**35***e* illustrate assembly steps that may be completed in accord with another alternative embodiment of the present invention.

FIGS. **36***a*–**36***e* illustrate assembly steps that may be completed in accord with another alternative embodiment of the present invention.

FIGS. **37***a*–**37***g* illustrate assembly steps that may be completed in yet another alternative embodiment of the present invention.

FIG. **38** is a perspective exploded view of an integrated chip range finder and integrated controller in accord with another alternative embodiment of the present invention.

FIG. **39** is an exploded perspective view of an integrated controller battery and integrated controller in accord with another alternative embodiment of the present invention.

FIG. **40** is an exploded perspective view of an integrated controller range finder in accord with another alternative embodiment of the present invention.

FIG. **41** is a perspective view of an optical lens system in accord with yet another alternative embodiment of the present invention.

FIG. **42** is a perspective view of an optical lens system in accord with yet another alternative embodiment of the present invention.

FIG. **43** is a perspective view of an optical lens system in accord with yet another alternative embodiment of the present invention.

FIG. **44***a* is an exploded perspective view of an integrated power source, controller and range finder in accord with another alternative embodiment of the present invention.

FIG. **44***b* is a side sectional view the integrated power source, controller and range finder of FIG. **44***a* along Z–Z' in accord with one embodiment of the present invention.

FIG. **45** is a side view of the range finder transmitter of FIG. **44***b* in accord with one embodiment of the present invention.

FIG. **46** is a side view of the range finder receiver of FIG. **44***b* in accord with one embodiment of the present invention.

FIGS. **47***a*–**47***c* are side views of a wearer of an optical lens system in accord with one embodiment of the present invention.

FIG. **48** is a perspective view of an electro-active optical system in accord with one embodiment of the invention.

FIG. **49** is a perspective view of an electro-active optical system in accord with one embodiment of the invention.

FIG. **50** is a perspective view of an electro-active optical system in accord with one embodiment of the invention.

FIG. **51** is a perspective view of an electro-active optical system in accord with one embodiment of the invention.

FIG. **52** is a perspective view of an electro-active optical system in accord with one embodiment of the invention.

FIG. **53***a* is a frontal view of an electro-active spectacle in accord with one embodiment of the invention.

FIG. **53***b* is a side view of an electro-active spectacle in accord with one embodiment of the invention.

FIG. **53***c* is a side view of an electro-active spectacle in accord with one embodiment of the invention.

FIG. **53***d* is a side view of an electro-active spectacle in accord with one embodiment of the invention.

FIG. **54** is a frontal view of an electro-active spectacle in accord with one embodiment of the invention.

FIG. **55** is a frontal view of an electro-active spectacle in accord with one embodiment of the invention.

FIG. **55***a* is a side view of an electro-active spectacle in accord with one embodiment of the invention.

FIG. **55***b* is a side view of an electro-active spectacle in accord with one embodiment of the invention.

FIG. **55***c* is a side view of an electro-active spectacle in accord with one embodiment of the invention.

FIG. **56** is a side view of an electro-active spectacle in accord with one embodiment of the invention.

FIG. **57** is a frontal view of an electro-active spectacle in accord with one embodiments of the invention.

DETAILED DESCRIPTION OF PREFERRED EMBODIMENTS

In 1998, there were approximately 92 million eye examinations performed in the United States alone. The vast majority of these examinations involved a thorough check for eye pathology both internal and external, analysis of muscle balance and binocularity, measurement of the cornea and, in many cases, the pupil, and finally a refractive examination, which was both objective and subjective.

Refractive examinations are performed to understand/diagnose the magnitude and type of the refractive error of one's eye. The types of refractive error that are currently able to be diagnosed & measured, are myopia, hyperopia, astigmatism, and presbyopia. Current refractors (phoropters) attempt to correct one's vision to 20/20 distance and near and, in some cases, 20/15 distance vision can be achieved; however, this is by far the exception.

It should be pointed out that the theoretical limit to which the retina of one's eye can process and define vision is approximately 20/10. This is far better than the level of vision which is currently obtained by way of both today's refractors (phoropters) and conventional spectacle lenses. What is missing from these conventional devices is the ability to detect, quantify and correct for non-conventional refractive error, such as aberrations, irregular astigmatism, or ocular layer irregularities. These aberrations, irregular astigmatism, and/or ocular layer irregularities may be as a result of one's visual system or as a result of aberrations caused by conventional eyeglasses, or a combination of both.

Therefore, it would be extremely beneficial to have a means for detecting, quantifying, and correcting one's vision as close to 20/10 or better as possible. Furthermore, it would be beneficial to do this in a very efficient and user friendly manner.

The present invention utilizes a novel approach in detecting, quantifying and correcting one's vision. The approach involves several innovative embodiments utilizing an electro-active lens. Furthermore, the invention utilizes a novel approach towards the selection, dispensing, activating, and programming of electro-active eyewear.

For example, in one inventive embodiment, a novel electro-active phoropter/refractor is utilized. This electro-active phoropter/refractor utilizes far fewer lens components than today's phoropters and is a fraction of the overall size and/or weight of today's phoropters. In fact, this exemplary inventive embodiment consists of only a pair of electro-active lenses housed in a frame mounting that provides, either through its own structural design and/or by way of a network of conductive wires, electrical power needed to enable the electro-active lenses to function properly.

To assist with understanding certain embodiments of the invention, explanations of various terms are now provided.

In some situations, these explanations are not necessarily intended to be limiting, but, should be read in light of the examples, descriptions, and claims provided herein.

An "electro-active zone" can include or be included in an electro-active structure, layer, and/or region. An "electro-active region" can be a portion and/or the entirety of an electro-active layer. An electro-active region can be adjacent to another electro-active region. An electro-active region can be attached to another electro-active region, either directly, or indirectly with, for example, an insulator between each electro-active region. An "electro-active refractive matrix" is both an electro-active zone and region and can be attached to another electro-active layer, either directly, or indirectly with, for example, an insulator between each electro-active layer. "Attaching" can include bonding, depositing, adhering, and other well-known attachment methods. A "controller" can include or be included in a processor, a microprocessor, an integrated circuit, an IC, a computer chip, and/or a chip. A "refractor" can include a controller. An "auto-refractor" can include a wave front analyzer. "Near distance refractive error" can include presbyopia and any other refractive error needed to be corrected for one to see clearly at near distance. "Intermediate distance refractive error" can include the degree of presbyopia needed to be corrected an intermediate distance and any other refractive error needed to be corrected for one to see clearly at intermediate distance. "Far distance refractive error" can include any refractive error needed to be corrected for one to see clearly at far distance. "Near distance" may be from about 6 inches to about 22 inches, and more preferably from about 14 inches to about 18 inches. "Near-Intermediate distance" may be from about 22 inches to about 5 feet. "Far-Intermediate distance" may be from about 5 feet to about 15 feet. "Far distance" may be any distance between about 15 feet and infinity, and more preferably, infinity. "Conventional refractive error" can include myopia, hyperopia, astigmatism, and/or presbyopia. "Non-conventional refractive error" can include irregular astigmatism, aberrations of the ocular system, and any other refractive error not included in conventional refractive error. "Optical refractive error" can include any aberrations associated with a lens optic.

In certain embodiments, a "spectacle" can include one lens. In other embodiments, a "spectacle" can include more than one lens. A "multi-focal" lens can include bifocal, trifocal, quadrafocal, and/or progressive addition lens. A "finished" lens blank can include a lens blank that has finished optical surface on both sides. A "semi-finished" lens blank can include a lens blank that has, on one side only, a finished optical surface, and on the other side, a non-optically finished surface, the lens needing further modifications, such as, for example, grinding and/or polishing, to make it into a useable lens. "Surfacing" can include grinding and/or polishing off excess material to finish a non-finished surface of a semi-finished lens blank.

FIG. **1** is a perspective view of an embodiment of electro-active phoropter/refractor system **100**. Frames **110** contain electro-active lens **120**, which are connected via a network of conductive wires **130** to an electro-active lens controller **140** and to an electrical power source **150**.

In certain embodiments, the temples (not shown in FIG. **1**) of frames **110** contain batteries or power sources such as, for example, a micro-fuel cell. In other inventive embodiments, the temple or temples of frame **110** possess the needed electrical components so that a power cord is plugged directly into an electrical outlet and/or the electro-active refractor's controller/programmer **160**.

Still in other inventive embodiments, the electro-active lenses **120** are mounted in a housing assembly which is suspended so one could simply position one's face properly in order to look through the electro-active lenses while being refracted.

While the first inventive embodiment utilizes only a pair of electro-active lenses, in certain other inventive embodiments, multiple electro-active lenses are used. Still in other inventive embodiments, a combination of conventional lenses and electro-active lenses are utilized.

FIG. **2** is a diagrammatic view of an exemplary embodiment of an electro-active refractor system **200** that includes housing assembly **210** that contains at least one electro-active lens **220** and several conventional lenses, specifically, diffractive lens **230**, prismatic lens **240**, astigmatic lens **250**, and spherical lens **260**. A network of conductive wires **270** connects the electro-active lens **220** to a power source **275** and to a controller **280**, that provides a prescription display **290**.

In each inventive embodiment where multiple electro-active lenses and/or a combination of conventional and electro-active lenses are utilized, the lenses can be used to test one's vision in a random and/or non-random one-at-a-time sequence. In other inventive embodiments, two or more lenses are added together giving a total corrective power in front of each eye as needed.

The electro-active lenses, which are utilized in both the electro-active phoropter and the electro-active eyewear, are comprised of either a hybrid and/or non-hybrid construction. In a hybrid construction, a conventional lens optic is combined with an electro-active zone. In a non-hybrid construction, no conventional lens optic is used.

As discussed above, the invention differs from today's conventional dispensing practice sequence **300**, which is shown as a flow diagram in FIG. **3**. As shown at steps **310** and **320**, traditionally an eye examination involving a conventional refractor is followed by obtaining one's prescription and taking that prescription to a dispenser. Then, as shown at steps **330** and **340**, at the dispenser one's frames and lens are selected. As shown at step **350** and **360**, the lenses are fabricated, edged, and assembled into the frames. Finally, at step **370**, the new prescription eyeglasses are dispensed and received.

As shown in the flow diagram of FIG. **4**, in an exemplary embodiment of one inventive dispensing method **400**, at step **410** the electro-active eyewear is selected by or for the wearer. At step **420**, the frames are fitted to the wearer. With the wearer wearing the electro-active eyewear, at step **430**, the electronics are controlled by the electro-active phoropter/refractor control system, which in most cases is operated by an eyecare professional and/or technician. However, in certain inventive embodiments, the patient or wearer can actually operate the control system and thus, control the prescription of their own electro-active lenses. In other inventive embodiments, both the patient/wearer and the eyecare professional and/or technician work with the controller together.

At step **440**, the control system, whether operated by the eyecare professional, technician, and/or the patient/wearer, is utilized to select both objectively or subjectively the best correcting prescription for the patient/wearer. Upon selecting the proper prescription to correct the patient/wearer's vision to it's optimal correction, the eyecare professional or technician then programs the patient's/wearer's electro-active eyewear.

In one inventive embodiment, the selected prescription is programmed into an electro-active eyewear controller, and/

or one or more controller components, prior to the selected electro-active eyewear being disconnected from the electro-active phoropter/refractor's controller. In other inventive embodiments the prescription is programmed into the selected electro-active eyewear at a later time.

In either case the electro-active eyewear is selected, fitted, programmed, and dispensed at step **450** in a totally different sequence than conventional eyeglasses are today. This sequence allows for improved manufacturing, refracting and dispensing efficiencies.

Via this inventive method, the patient/wearer literally can select their eyewear, wear them while the testing of their vision is taking place, and then have them programmed for the correct prescription. In most cases, but not all, this is done before the patient/wearer leaves the examination chair, thus, ensuring the total fabrication and programming accuracy of the patient's final prescription, as well as the accuracy of the eye refraction itself. Finally, in this inventive embodiment the patient can literally wear their electro-active eyeglasses when they get up out of the examination chair and proceed out of the eyecare professional's office.

It should be pointed out that other inventive embodiments allow for the electro-active phoropter/refractor to simply display or print out the patient or wearer's best corrected prescription which is then filled in much the same manner as in the past. Currently the process involves taking a written prescription to a dispensing location where electro-active eyewear (frames and lenses) are sold and dispensed.

Still in other inventive embodiments the prescription is sent electronically, for example, via the Internet, to a dispensing location where electro-active eyewear (frames and lenses) are sold.

In the case where the prescription is not filled at the point where the eye refraction is performed, in certain inventive embodiments an electro-active eyewear controller, and/or one or more controller components, is either programmed and installed into the electro-active eyewear, or directly programmed while installed in the electro-active eyewear, following the refraction. In the case where nothing is added to the electro-active eyewear, the electro-active eyewear controller, and/or one or more controller components, is an intricate built-in part of the electro-active eyewear and does not need to be added at a later time.

FIG. **27** is a flow diagram of an embodiment of another inventive dispensing method **2700**. At step **2710**, the vision of the patient is refracted using any method. At step **2720**, the prescription for the patient is obtained. At step **2730**, the electro-active eyewear is selected. At step **2740**, the electro-active eyewear is programmed with the wearer's prescription. At step **2750**, the electro-active eyewear is dispensed.

FIG. **5** is a perspective view of another inventive embodiment of the electro-active eyewear **500**. In this illustrative example, frames **510** contain generic electro-active lenses **520** and **522** that are electrically coupled by connecting wires **530** to electro-active eyewear controller **540** and power source **550**. Section line Z—Z divides generic electro-active lens **520**.

Controller **540** acts as the "brains" of the electro-active eyewear **500**, and can contain at least one processor component, at least one memory component for storing instructions and/or data for a specific prescription, and at least one input/output component, such as a port. Controller **540** can perform computational tasks such as reading from and writing into memory, calculating voltages to be applied to individual grid elements based on desired refractive indices, and/or acting as a local interface between the patient/user's eyewear and the associated refractor/phoropter equipment.

In one inventive embodiment, controller **540** is pre-programmed by the eyecare specialist or technician to meet the patient's convergence and accommodative needs. In this embodiment, this pre-programming is done on controller **540** while controller **540** is outside the patient's eyewear, and controller **540** is then inserted into the eyewear after the examination. In one inventive embodiment, controller **540** is a "read-only" type, supplying the voltage to grid elements to obtain the necessary array of refractive indices to correct the vision for a specific distance. As the patient's prescription changes, a new controller **540** must be programmed and inserted into the eyewear by the specialist. This controller would be of a class of ASIC's, or application specific integrated circuits, and its memory and processing commands permanently imprinted.

In another inventive embodiment, the electro-active eyewear controller may be originally programmed by the eyecare specialist or technician when first dispensed, and later the same controller, or a component thereof, can be reprogrammed to provide a different correction, as the patient's needs change. This electro-active eyewear controller may be extracted from the eyewear, placed in the refractor's controller/programmer (shown in FIGS. **1** and **2**) and reprogrammed during the examination, or reprogrammed, in situ, by the refractor without removal from the electro-active eyewear. The electro-active eyewear controller in this case could, for example, be of a class of FPGA's, or field programmable gate array architecture. In this inventive embodiment the electro-active eyewear controller may be permanently built into the eyewear and require only an interface link to the refractor which issues the reprogramming commands to the FPGA. Part of this link would include external AC power to the electro-active eyewear controller provided by an AC adapter embedded in the refractor/phoropter or in its controller/programmer unit.

In another inventive embodiment, the electro-active eyewear acts as the refractor, and the external equipment operated by the eyecare specialist or technician consists of merely a digital and/or analog interface to the electro-active eyewear's controller. Thus, the electro-active eyewear controller can also serve as the controller for the refractor/phoropter. In this embodiment, the necessary processing electronics are available to alter the array of grid voltages to the electro-active eyewear and reprogram the electro-active eyewear controller with this data after the optimal correction for the user is empirically determined. In this case, the patient reviews the eye charts through his/her own electro-active eyewear during the examination and may be unaware that as he/she is selecting the best corrective prescription, the controller in their electro-active eyewear is simultaneously being reprogrammed electronically.

Another innovative embodiment utilizes an electronic auto-refractor that can be used as a first step and/or in combination with the electro-active refractors (shown in FIGS. **1** and **2**) such as by way of example, but not limited to Humphrey's Auto-refractor & Nikon's Auto-refractor which have been developed or modified to provide feed back which is compatible and programmed for use with the invention's electro-active lenses. This innovative embodiment is used to measure one's refractive error, while the patient or wearer is wearing his or her electro-active spectacles. This feedback is fed automatically or manually into a controller and/or programmer, which then calibrates, programs or reprograms the controller of the user/wearer's electro-active spectacles. In this innovative embodiment,

one's electro-active spectacles can be re-calibrated as needed without requiring full eye examination or eye refraction.

In certain other inventive embodiments, one's vision correction is corrected, by way of one's electro-active lenses, to 20/20. This is obtained in most cases by correcting one's conventional refractive error (myopia, hyperopia, astigmatism, and/or presbyopia). In certain other inventive embodiments, non-conventional refractive error such as aberrations, irregular astigmatism, and/or ocular layer irregularities of the eye are measured and corrected, as well as conventional refractive error (myopia, hyperopia, astigmatism and/or presbyopia). In the inventive embodiments whereby aberrations, irregular astigmatism, and/or ocular layer irregularities of the eye are corrected in addition to conventional refractive error, one's vision can be corrected in many cases to better than 20/20, such as to 20/15, to better than 20/15, to 20/10, and/or to better than 20/10.

This advantageous error correction is accomplished by utilizing the electro-active lenses in the eyewear effectively as an adaptive optic. Adaptive optics have been demonstrated and in use for many years to correct for atmospheric distortion in ground-based astronomical telescopes, as well as for laser transmission through the atmosphere for communications and military applications. In these cases, segmented or "rubber" mirrors are usually employed to make small corrections to the wave front of the image or laser lightwave. These mirrors are manipulated by mechanical actuators in most cases.

Adaptive optics, as applied to vision, is based on active probing of the ocular system with a light beam, such as an eye-safe laser, and measures the wavefront distortion of either the retinal reflection or the image created on the retina. This form of wavefront analysis assumes a plane or spherical probe wave and measures the distortion imparted on this wavefront by the ocular system. By comparing the initial wavefront with the distorted one, a skilled examiner can determine what abnormalities exist in the ocular system and prescribe an appropriate corrective prescription. There are several competing designs for wavefront analyzers, however, the adaption of the electro-active lenses described here for use as either a transmissive or reflective spatial light modulator to perform such wavefront analysis is included within the invention. Examples of wavefront analyzers are provided in U.S. Pat. No. 5,777,719 (Williams) and U.S. Pat. No. 5,949,521 (Williams), each of which is herein incorporated by reference in its entirety.

In certain embodiments of the present invention, however, small corrections or adjustments are made to the electro-active lenses so that an image lightwave is imparted by a grid array of electrically driven pixels whose index of refraction can be altered, accelerating or slowing down the light passing through them by the alterable index. In this way, the electro-active lens becomes an adaptive optic, which can compensate for the inherent spatial imperfection in the optics of the eye itself in order to obtain a nearly aberration-free image on the retina.

In certain inventive embodiments, because the electro-active lens is fully two-dimensional, fixed spatial aberrations caused by the eye's optical system can be compensated for by incorporating the small index of refraction corrections on top of the gross vision correction prescription needs of the patient/user. In this way, vision can be corrected to a level of better than what could be achieved with common convergence and accommodation corrections, and, in many cases, could result in vision better than 20/20.

In order to achieve this better than 20/20 correction, the patient's ocular aberrations can be measured by, for example, a modified auto refractor utilizing a wavefront sensor or analyzer designed specifically for eye aberration measurements. Once the ocular aberrations and other types of non-conventional refractive error have been determined in both magnitude and spatially, the controller in the eyewear can be programmed to incorporate the 2-D spatially-dependent index of refraction changes to compensate for these aberrations and other types of non-conventional refractive error in addition to the overall myopia, hyperopia, presbyopia, and/or astigmatism correction. Thus, embodiments of the electro-active lens of the present invention can electro-actively correct for aberrations of the patient's ocular system or created by the lens optic.

Thus, for example, a certain power correction of −3.50 diopters may be required in a certain electro-active divergent lens to correct a wearer's myopia. In this case, an array of different voltages, $V_1 \ldots V_N$, is applied to the M elements in the grid array to generate an array of different indices of refraction, $N_1 \ldots N_M$, which give the electro-active lens a power of −3.50 diopters. However, certain elements in the grid array may require up to plus or minus 0.50 units change in their index $N_1 \ldots N_M$ to correct for ocular aberrations and/or non-conventional refractive error. The small voltage deviations corresponding to these changes are applied to the appropriate grid element, in addition to the base myopia-correcting voltages.

In order to detect, quantify, and/or correct as much as possible for non-conventional refractive error such as irregular astigmatism, ocular refractive irregularities, such as for example, the tear layer on the front of the cornea, the front, or back of the cornea, aqueous irregularities, the front or back of the lenticular lens, vitreous irregularities, or for other aberrations caused by the ocular refractive system itself, the electro-active refractor/phoropter is used according to an embodiment of the inventive prescription method **600** of FIG. **6**.

At step **610**, either a conventional refractor, an electro-active refractor having both conventional and electro-active lenses, or an electro-active refractor having only electro-active lenses, or an auto-refractor, is utilized to measure one's refractive error using conventional lens powers such as minus power (for myopes), plus power (for hyperopes), cylindrical power and axis (for astigmatism) and prism power when needed. Utilizing this approach, one will get what is known today as the patient's BVA (best visual acuity) by way of conventional corrective refractive error. However, certain embodiments of the invention allow for improving one's vision beyond what today's conventional refractor/phoropters will achieve.

Therefore, step **610** provides for further refinement of one's prescription in a non-conventional inventive way. In step **610**, the prescription, which accomplishes this end point, is programmed into the electro-active refractor. The patient is properly positioned to look through the electro-active lenses having a multi-grid electro-active structure into a modified and compatible autorefractor or a wavefront analyzer, which automatically measures precisely the refractive error. This refractive error measurement detects and quantifies as much non-conventional refractive errors as possible. This measurement is taken through a small, approximately 4.29 mm, targeted area of each electro-active lens, while automatically computing the necessary prescription to achieve the best focus on the fovea along the line-of-sight while the patient is looking through the targeted area of the electro-active lens. Once this measurement is

made this non-conventional correction is either stored in the controller/programmer memory for future use or it is then programmed into the controller that controls the electro-active lenses. This, of course, is repeated for both eyes.

At step **620**, the patient or wearer now may at their option elect to use a control unit which will allow them to further refine the conventional refractive error correction, the non-conventional refractive error correction, or a combination of both, and thus the final prescription, to their liking. Alternatively, or in addition, the eyecare professional may refine it, until in some cases no further refinement is performed. At this point, an improved BVA for the patient, better than any available via conventional techniques, will be achieved.

At step **630**, any further refined prescription is then programmed into the controller, which controls the electro-active lenses' prescription. At step **640**, the programmed electro-active spectacles are dispensed.

While the preceding steps **610** through **640** present an embodiment of one inventive method, depending upon the eyecare professional's judgement or approach, numerous different but similar approaches could be used to detect, quantify, and/or correct one's vision using solely electro-active refractors/phoropters or in combination with wave-front analyzers. Any method, no matter in what sequence, that utilizes an electro-active refractor/phoropter to detect, quantify, and/or correct one's vision, whether in conjunction with a wavefront analyzer or not, is considered part of the invention. For example, in certain inventive embodiments, steps **610** through **640** may be performed in either a modified way or even a different sequence. Furthermore, in embodiments of certain other inventive methods, the targeted area of the lens referred to in step **610** is within the range of about 3.0 millimeters in diameter to about 8.0 millimeters in diameter. Still in other inventive embodiments, the targeted area can be anywhere from about 2.0 millimeters in diameter up to the area of the entire lens.

Although this discussion has thus far concentrated on refraction using various forms of electro-active lenses alone or in combination with wavefront analyzers to perform the eye examination of the future, there is another possibility that new emerging technology may allow simply for objective measurements, thus potentially eliminating the need for a patient's communicated response or interaction. Many of the inventive embodiments described and/or claimed herein are intended to work with any type of measuring system, whether objective, subjective, or a combination of both.

Turning now to the electro-active lens itself, as discussed above, an embodiment of the present invention concerns an electro-active refractor/phoropter that has a novel electro-active lens, that can either be of a hybrid or of a non-hybrid construction. By hybrid construction it is meant a combination of a conventional single vision or a multifocal lens optic, with at least one electro-active zone located on the front surface, back surface, and/or in between the front and back surfaces, the zone consisting of an electro-active material having the necessary electro-active means to change focus electrically. In certain embodiments of the invention, the electro-active zone is specifically placed either inside the lens or on the back concave surface of the lens to protect it from scratches and other normal wear. In the embodiment where the electro-active zone is included as part of the front convex surface, in most cases a scratch resistant coating is applied. The combination of the conventional single vision lens or a conventional multifocal lens and the electro-active zone gives the total lens power of the hybrid lens design. By non-hybrid it is meant a lens which is electro-active whereby mostly 100% of its refractive power is generated solely by its electro-active nature.

FIG. **7** is a front view, and FIG. **8** is a section view taken along line A—A, of an embodiment of an exemplary hybrid electro-active spectacle lens **700**. In this illustrative example, lens **700** includes a lens optic **710**. Attached to lens optic **710** is an electro-active refractive matrix **720**, that can have one or more electro-active regions that occupy all or a portion of electro-active refractive matrix **720**. Also attached to lens optic **710** and at least partially surrounding electro-active refractive matrix **720** is framing layer **730**. Lens optic **710** includes an astigmatic power correction region **740** having an astigmatic axis A—A rotated, in this specific example only, approximately 45 degrees clockwise from horizontal. Covering electro-active refractive matrix **720** and framing layer **730** is an optional cover layer **750**.

As will be discussed further, electro-active refractive matrix **720** can include a liquid crystal and/or a polymer gel. Electro-active refractive matrix **720** can also include an alignment layer, a metallic layer, a conducting layer, and/or an insulating layer.

In an alternative embodiment, astigmatic correction region **740** is eliminated so that lens optic **710** corrects for sphere power only. In another alternative embodiment, lens optic **710** can correct for either far distance, near distance, and/or both, and any sort of conventional refractive error, including spheric, cylindric, prismatic, and/or aspheric errors. Electro-active refractive matrix **720** can also correct for near distance, and/or for non-conventional refractive error such as aberrations. In other embodiments, electro-active refractive matrix **720** can correct any sort of conventional or non-conventional refractive error and lens optic **710** can correct for conventional refractive error.

It has been discovered that an electro-active lens having a hybrid construction approach has certain distinct advantages over that of a non-hybrid lens. These advantages are lower electrical power needs, smaller battery size, longer battery life expectancy, less complex electrical circuitry, fewer conductors, fewer insulators, lower manufacturing costs, increased optical transparency, and increased structural integrity. However, it must be noted that non-hybrid electro-active lenses have their own set of advantages, including reduced thickness and mass manufacturing.

It also has been discovered that both the non-hybrid, and in some embodiments, the full field hybrid and partial field hybrid approach, will allow for mass manufacturing of a very limited number of SKUs (Stock Keeping Units) when, for example, the electro-active structural design utilized is that of a multi-grid electro-active structure. In this case, it would only be necessary when mass manufacturing to focus primarily on a limited number of differentiated features such as curvature and size for the wearer's anatomical compatibility.

To understand the significance of this improvement, one must understand the number of traditional lens blanks needed to address most prescriptions. About 95% of corrective prescriptions include a sphere power correction within a range of −6.00 diopters to +6.00 diopters, in 0.25 diopter increments. Based on this range, there are about 49 commonly prescribed sphere powers. Of those prescriptions that include an astigmatism correction, about 95% fall within the range of −4.00 diopters to +4.00 diopters, in 0.25 diopter increments. Based on this range, there are about 33 commonly prescribed astigmatic (or cylinder) powers. Because astigmatism has an axis component, however, there are

about 360 degrees of astigmatic axis orientations, which are typically prescribed in 1 degree increments. Thus, there are 360 different astigmatic axis prescriptions.

Moreover, many prescriptions include a bifocal component to correct for presbyopia. Of those prescriptions that have a presbyopic correction, about 95% fall within the range of +1.00 to +3.00 diopters, in 0.25 diopter increments, thereby resulting in about 9 commonly prescribed presbyopic powers.

Because some embodiments of the invention can provide for spherical, cylindrical, axis, and presbyopic corrections, one non-hybrid electro-active lens can serve the 5,239,080 (=49×33×360×−9) different prescriptions. Thus, one non-hybrid electro-active lens can eliminate the need to mass manufacture and/or stock numerous lens blank SKUs, and of possibly greater importance, can eliminate the need to grind and polish each lens blank to a particular patient's prescription.

To account for the various lens curvatures that may be needed to accommodate anatomical issues such as face shape, eyelash length, etc., somewhat more than one non-hybrid electro-active lens SKU could be mass manufactured and/or stocked. Nevertheless, the number of SKU's could be reduced from millions to about five or less.

In the case of the hybrid electro-active lens, it has been discovered that by correcting for conventional refractive error with the lens optic and utilizing a mostly centered electro-active layer, it is possible to also reduce the number of SKU's needed. Referring to FIG. **7**, lens **700** can be rotated as needed to place astigmatic axis A—A in the needed position. Thus, the number of hybrid lens blanks needed can be reduced by a factor of 360. Moreover, the electro-active zone of the hybrid lens can provide the presbyopic correction, thereby reducing by a factor of 9 the number of lens blanks needed. Thus, a hybrid electro-active lens embodiment can reduce from more than 5 million to 1619 (=49×33) the number of lens blanks needed. Because it may be reasonably possible to mass manufacture and/or stock this number of hybrid lens blank SKUs, the need for grinding and polishing may be eliminated.

Nevertheless, grinding and polishing semi-finished hybrid lens blanks into finished lens blanks remains a possibility. FIG. **28** is a perspective view of an embodiment of a semi-finished lens blank **2800**. In this embodiment, semi-finished lens blank **2800** has a lens optic **2810** with a finished surface **2820**, an unfinished surface **2830**, and a partial field electro-active refractive matrix **2840**. In another embodiment, semi-finished lens blank **2800** can have a full field electro-active layer. Moreover, the electro-active structure of semi-finished lens blank **2800** can be multi-grid or single interconnect. Further, semi-finished lens blank **2800** can have refractive and/or diffractive characteristics.

In either the hybrid or the non-hybrid embodiment of the electro-active lens, a significant number of needed correcting prescriptions can be created and customized by the electro-active lens which can be adjusted and controlled by a controller that has been customized and/or programmed for the patient's specific prescription needs. Thus, the millions of prescriptions and numerous lens styles, single vision lens blanks, as well as the numerous multifocal semi-finished lens blanks may be no longer needed. In fact, most lens and frame manufacturing and distribution, as we know it may be revolutionized.

It should be noted that the invention includes both non-hybrid electro-active lenses, as well as full and partial field specific hybrid electro-active lenses that are either pre-manufactured electronic eyewear (frame and/or lenses) or customized electronic eyewear at the time of delivery to the patient or customer. In the case of the eyewear being pre-fabricated and assembled, both the frames and the lenses are pre-made with the lenses already edged and put into the eyeglass frames. Also considered to be part of the invention is the programmable and re-programmable controller as well as the mass production of frames and lenses having the necessary electric components which can be prefabricated and sent to the eyecare professional's site or some other site for either the installation of, for example, a programmed controller, and/or one or more controller components, for the patient's prescription.

In certain cases the controller, and/or one or more controller components, can be part of the pre-manufactured frame and electro-active lens assembly and then programmed at either the eyecare professional's site or some other site. The controller, and/or one or more controller components, can be in the form, for example, of a chip or a thin film and can be housed in the frame, on the frame, in the lens, or on the lens of the eyeglasses. The controller, and/or one or more controller components, can be re-programmable or not re-programmable based upon the business strategy to be implemented. In the case where the controller, and/or one or more controller components, is re-programmable, this will allow for the repeated updating of one's prescriptions as long as the patient or customer is happy with his or her eyeglass frames as well as the cosmetic appearance and functionality of the electro-active lenses.

In the case of the latter, the non-hybrid and hybrid electro-active lens embodiments just discussed, the lenses must be structurally sound enough in order to protect the eye from injury from a foreign object. In the United States, most eyewear lenses must pass a FDA required impact test. In order to meet these requirements, it is important that a support structure is built into or on the lens. In the case of the hybrid type, this is accomplished, for example, utilizing either a prescription or non-prescription single vision or multifocal lens optic as a structural base. For example, the structural base for the hybrid type can be made out of polycarbonate. In the case of the non-hybrid lens, in certain embodiments, the electro-active material selected and thickness accounts for this needed structure. In other embodiments, the non-prescription carrier base or substrate onto which the electro-active material is positioned accounts for this needed protection.

When utilizing electro-active zones in spectacle lenses in certain hybrid designs, it can be essential to maintain proper distance correction when a power interruption to the lenses occurs. In the case of a battery or wiring failure, in some situations it could be disastrous if the wearer was driving an automobile or piloting an airplane and their distance correction was lost. To prevent such occurrences, the inventive design of the electro-active spectacle lenses can provide for the distance correction to be maintained when the electro-active zones are in the OFF position (the inactivated or unpowered state). In an embodiment of this invention, this can be accomplished by providing the distance correction with a conventional fixed focal length optic, whether it be a refractive or a diffractive hybrid type. Any additional add power, therefore, is provided by the electro-active zone(s). Thus, a fail-safe electro-active system occurs, because the conventional lens optic will preserve the wearer's distance correction.

FIG. **9** is a side view of an exemplary embodiment of another electro-active lens **900** having a lens optic **910** that is index matched to an electro-active refractive matrix **920**.

In this illustrative example, the diverging lens optic **910**, having an index of refraction, n_1, provides distance correction. Attached to lens optic **910** is the electro-active refractive matrix **920**, which can have an unactivated state, and a number of activated states. When electro-active refractive matrix **920** is in its unactivated state, it has an index of refraction n_2, which approximately matches the index of refraction, n_1, of lens optic **910**. More accurately, when unactivated, n_2 is within 0.05 refractive units of n_1. Surrounding electro-active refractive matrix **920** is framing layer **930**, which has an index of refraction, n_3, that also approximately matches the index of refraction, n_1, of lens optic **910** within 0.05 refractive units of n_1.

FIG. **10** is a perspective view of an exemplary embodiment of another electro-active lens system **1000**. In this illustrative example, electro-active lens **1010** includes a lens optic **1040** and an electro-active refractive matrix **1050**. A rangefinder transmitter **1020** is positioned on electro-active refractive matrix **1050**. Also, a rangefinder detector/receiver **1030** is positioned on electro-active refractive matrix **1050**. In an alternative embodiment, either transmitter **1020** or receiver **1030** can be positioned in electro-active refractive matrix **1050**. In other alternative embodiments, either transmitter **1020** or receiver **1030** can be positioned in or on lens optic **1040**. In other embodiments either transmitter **1020** or receive **1030** can be positioned on outer covering layer **1060**. Further, in other embodiments, **1020** and **1030** can be positioned on any combination of the preceding.

FIG. **11** is a side view of an exemplary embodiment of a diffractive electro-active lens **1100**. In this illustrative example, lens optic **1110** provides distance correction. Etched on one surface of lens optic **1110** is diffractive pattern **1120**, having an index of refraction, n.sub.1. Attached to lens optic **1110** and covering diffractive pattern **1120** is electro-active refractive matrix **1130**, which has an index of refraction, n.sub2, that approximates n.sub.1, when electro-active refractive matrix **1130** is in its unactivated state. Also attached to lens optic **1110** is framing layer **1140**, which is constructed of material mostly identical to lens optic **1110**, and which at least partially surrounds electro-active refractive matrix **1120**. A covering **1150** is attached over electro-active refractive matrix **1130** and framing layer **1140**. The framing layer **1140** can also be an extension of lens optic **1110**, in which can no actual layer is added, however, lens optic **1110** is fabricated so as to frame or circumscribe electro-active refractive matrix **1130**.

FIG. **12** is a front view, and FIG. **13** a side view, of an exemplary embodiment of an electro-active lens **1200** having a multi-focal optic **1210** attached to an electro-active framing layer **1220**. In this illustrative example, multi-focal optic **1210** is of a progressive addition lens design. Moreover, in this illustrative example, multi-focal optic **1210** includes a first optical refraction focus zone **1212** and a second progressive addition optical refraction focus zone **1214**. Attached to multi-focal optic **1210** is electro-active framing layer **1220** having an electro-active region **1222** that is positioned over second optical refraction focus zone **1214**. A cover layer **1230** is attached to electro-active framing layer **1220**. It should be noted that the framing layer can be either electro-active or non-electro-active. When the framing layer is electro-active, insulating material is utilized to insulate the activated region from the non-activated region.

In most inventive cases, but not all, in order to program the electro-active eyewear to correct one's vision to its optimum, thus, correcting for non-conventional refractive error it is necessary to track the line-of-sight of each eye by way of tracking the eye movements of the patient or wearer.

FIG. **14** is a perspective view of an exemplary embodiment of a tracking system **1400**. Frames **1410** contain electro-active lens **1420**. Attached to the backside of electro-active lens **1420** (that side closest to the wearer's eyes, also referred to as the proximal side), are a tracking signal sources **1430**, such as light emitting diodes. Also attached to the backside of electro-active lens **1420** are tracking signal receivers **1440**, such as light reflection sensors. Receivers **1440**, and possibly sources **1430**, are connected to a controller (not shown) that includes in its memory instructions to enable tracking. Utilizing this approach it is possible to locate very precisely the eye movements up, down, right, left and any variation thereof. This is needed as certain types, but not all, of non-conventional refractive error needs to be corrected and isolated within one's line-of-sight (for example, in the case of a specific corneal irregularity or bump that moves as the eye moves).

In various alternative embodiments, sources **1430** and/or receivers **1440** can be attached to the backside of frames **1410**, embedded in the backside of frames **1410**, and/or embedded in the backside of lenses **1420**.

An important portion of any spectacle lens, including the electro-active spectacle lens, is the portion used to produce the sharpest image quality within the user's field of view. While a healthy person can see approximately 90 degrees to either side, the sharpest visual acuity is located within a smaller field of view, corresponding to the portion of the retina with the best visual acuity. This region of the retina is known as the fovea, and is approximately a circular region measuring 0.40 mm in diameter on the retina. Additionally, the eye images the scene through the entire pupil diameter, so the pupil diameter will also affect the size of the most critical portion of the spectacle lens. The resulting critical region of the spectacle lens is simply the sum of the diameter of the eye's pupil diameter added to the projection of the fovea's field of view onto the spectacle lens.

The typical range for the eye's pupil diameter is from 3.0 to 5.5 mm, with a most common value of 4.0 mm. The average fovea diameter is approximately 0.4 mm.

The typical range for the size of the fovea's projected dimension onto the spectacle lens is affected by such parameters as the length of the eye, the distance from the eye to the spectacle lens, etc.

The tracking system of this specific inventive embodiment then locates the regions of the electro-active lens that correlate to the eye movements relative to the fovial region of the patient's retina. This is important as the invention's software is programmed to always correct for the non-conventional refractive error that is correctable as the eye moves. Thus, it is necessary in most, but not all, inventive embodiments that correct for non-conventional refractive error to electro-actively alter the area of the lens that the line-of-sight is passing through as the eyes fixate their target or gaze. In other words, in this specific inventive embodiment the vast majority of the electro-active lens corrects for conventional refractive error and as the eye moves the targeted electro-active area focus moves as well by way of the tracking system and software to correct for the non-conventional refractive error taking into account the angle in which the line-of-sight intersects different sections of the lens and factoring this into the final prescription for that specific area.

In most, but not all, inventive embodiments, the tracking system and enabling software is utilized to correct one's vision to its maximum, while looking or gazing at distant objects. When looking at near points the tracking system, if

used, is utilized to both calculate the range of near point focus in order to correct for one's accommodative and convergence near or intermediate range focusing needs. This of course is programmed into the electro-active eyewear controller, and/or one or more controller components, as part of the patient or wearers' prescription. In still other inventive embodiments a range finder and/or tracking system is incorporated either into the lenses and/or frames.

It should be pointed out that in other inventive embodiments such as those that correct for certain types of non-conventional refractive error, such as, for example, irregular astigmatism, in most but not all cases, the electro-active lenses do not need to track the patient or wearer's eye. In this case the overall electro-active lens is programmed to correct for this, as well as the other conventional refractive error of the patient.

Also, since aberrations are directly related to the viewing distance, it has been discovered that they can be corrected in relation to the viewing distance. That is, once the aberration or aberrations have been measured, it is possible to correct for these aberrations in the electro-active refractive matrix by way of segregating the electro-active regions so as to electro-actively correct for aberrations for specific distances such as distance vision, far-intermediate vision, near-intermediate vision, and/or near vision. For example, the electro-active lens can be segregated into a far vision, far-intermediate vision, near-intermediate vision, and near vision corrective zones, each the software controlling each zone causing the zone to correct for those aberrations that impact the corresponding viewing distance. Therefore in this specific inventive embodiment, where the electro-active refractive matrix is segregated for different distances whereby each segregated region corrects for specific aberrations of a specific distance, it is possible to correct for non-refractive error without a tracking mechanism.

Finally, it should be pointed out that in another inventive embodiment, it is possible to accomplish the correction of the non-conventional refractive error, such as that caused by aberrations, without physically separating the electro-active regions and without tracking. In this embodiment, using the viewing distance as an input, the software adjusts the focus of a given electro-active area to account for the correction needed for an aberration that would otherwise impact the vision at the given viewing distance.

Furthermore, it has been discovered that either a hybrid or non-hybrid electro-active lens can be designed to have a full field or a partial field effect. By full field effect it is meant that the electro-active refractive matrix or layers cover the vast majority of the lens region within an eyeglass frame. In the case of a full field, the entire electro-active area can be adjusted to the desired power. Also, a full field electro-active lens can be adjusted to provide a partial field. However, a partial field electro-active specific lens design can not be adjusted to a full field due to the circuitry needed to make it partial field specific. In the case of a full field lens adjusted to become a partial field lens, a partial section of the electro-active lens can be adjusted to the desired power.

FIG. **15** is a perspective view of an exemplary embodiment of another electro-active lens system **1500**. Frames **1510** contain electro-active lenses **1520**, which have a partial field **1530**.

For purposes of comparison, FIG. **16** is a perspective view of an exemplary embodiment of yet another electro-active lens system **1600**. In this illustrative example, frames **1610** contain electro-active lenses **1620**, which have a full field **1630**.

In certain inventive embodiments the multifocal electro-active optic is pre-manufactured and in some cases, due to the significantly reduced number of SKU's required, even inventoried at the dispensing location as a finished multifocal electro-active lens blank. This inventive embodiment allows for the dispensing site to simply fit and edge the inventoried multifocal electro-active lens blanks into the electronic enabling frames. While in most cases this invention could be of a partial field specific type electro-active lens, it should be understood this would work for full field electro-active lenses, as well.

In one hybrid embodiment of the invention, a conventional single vision lens optic being of aspheric design or non-aspheric design having a toric surface for correction of astigmatism and a spherical surface is utilized to provide the distance power needs. If astigmatic correction is needed the appropriate power single vision lens optic would be selected and rotated to the proper astigmatic axis location. Once this is done the single vision lens optic could be edged for the eye wire frame style and size. The electro-active refractive matrix could then be applied on the single vision lens optic or the electro-active refractive matrix can be applied prior to edging and the total lens unit can be edged later. It should be pointed out that, for edging whereby the electro-active refractive matrix is affixed to a lens optic, either a single vision or multifocal electro-active optic, prior to edging, an electro-active material such as a polymer gel may be advantageous over a liquid crystal material.

The electro-active refractive matrix can be applied to compatible lens optics by way of different technologies known in the art. Compatible lens optics are optics whose curves and surfaces will accept the electro-active refractive matrix properly from the stand point of bonding, aesthetics, and/or proper final lens power. For example, adhesives can be utilized applying the adhesive directly to the lens optic and then laying down the electro-active layer. Also, the electro-active refractive matrix can be manufactured so it is attached to a release film in which case it can be removed and reattached adhesively to the lens optic. Also, it can be attached to two-way film carrier of which the carrier itself is attached adhesively to the lens optic. Furthermore, it can be applied utilizing a Surface Casting technique in which case the electro-active refractive matrix is created in-situ.

In previously mentioned hybrid embodiment, FIG. **12**, a combination of a static and non-static approach is used to satisfy one's mid and near point vision needs, a multifocal progressive lens **1210** having the proper needed distance correction and having, for example, approximately +1.00 diopter (or "D") of full near add power is utilized in lieu of the single vision lens optic. In utilizing this embodiment the electro-active refractive matrix **1220** can be placed on either side of the multifocal progressive lens optic, as well as buried inside the lens optic. This electro-active refractive matrix is utilized to provide for additional add power.

When utilizing a lower add power in the lens optic than required by the overall multifocal lens, the final add power is the total additive power of the low multifocal add and the additional required near power generated by way of the electro-active layer. For example only; if a multifocal progressive addition lens optic had an add power of +1.00 and the electro-active refractive matrix created a near power of +1.00 the total near power for the hybrid electro-active lens would be +2.00D. Utilizing this approach, it is possible to significantly reduce unwanted perceived distortions from multi-focal lenses, specifically progressive addition lenses.

In certain hybrid electro-active embodiments whereby a multifocal progressive addition lens optic is utilized, the

electro-active refractive matrix is utilized to subtract out unwanted astigmatism. This is accomplished by neutralizing or substantially reducing the unwanted astigmatism through an electro-actively created neutralizing power compensation solely in the areas of the lens where the unwanted astigmatism exists.

In certain inventive embodiments decentration of the partial field is needed. When applying a decentered partial field electro-active refractive matrix it is necessary to align the electro-active refractive matrix in such a way to accommodate the proper astigmatic axis location of the single vision lens optic so as to allow for correcting one's astigmatism, should it exist, as well as locating the electronic variable power field in the proper location for one's eyes. Also, it is necessary with the partial field design to align the partial field location to allow for proper decentration placement with regards to the patient's pupillary needs. It has been further discovered that unlike conventional lenses where the static bifocal, multifocal or progressive regions are always placed to always be below one's distance-viewing gaze, the use of an electro-active lens allows for certain manufacturing freedom not available to conventional multifocal lenses. Therefore, some embodiments of the invention, the electro-active region is located where one would typically find the distance, intermediate, and near vision regions of a conventional non-electro-active multi-focal lens. For example, the electro-active region can be placed above the 180 meridian of the lens optic, thereby allowing the multifocal near vision zone to be occasionally provided above the 180 meridian of the lens optic. Providing the near vision zone above the 180 meridian of the lens optic can be especially useful for those spectacle wearers working at close distances to an object directly in front or overhead of the wearer, such as working with a computer monitor, or nailing picture frames overhead.

In the case of a non-hybrid electro-active lens or both the hybrid full field lens and for example, a 35 mm diameter hybrid partial field lens, the electro-active layer, as stated before, can be applied directly to either the single vision lens optic, or pre-manufactured with a lens optic creating electro-active finished multifocal lens blanks, or the multifocal progressive lens optic, prior to edging the lens for the shape of the frame's lens mounting. This allows for pre-assembly of electro-active lens blanks, as well as being able to inventory stock finished, but not edged electro-active lens blanks, thus allowing for just in time eyeglass fabrication at any channel of distribution, including the doctor or optician's offices. This will allow all optical dispensaries to be able to offer fast service with minimal needs for expensive fabrication equipment. This benefits manufacturers, retailers, and their patients, the consumers.

Considering the size of the partial field, it has been shown, for example, in one inventive embodiment that the partial field specific region could be a 35 mm diameter centered or decentered round design. It should be pointed out that the diameter size can vary depending upon the needs. In certain inventive embodiments 22 mm, 28 mm, 30 mm, and 36 mm round diameters are utilized.

The size of the partial field can depend on the structure of the electro-active refractive matrix and/or the electro-active field. At least two such structures are contemplated as within the scope of the present invention, namely, a single-interconnect electro-active structure and a multi-grid electro-active structure.

FIG. **17** is a perspective view of an embodiment of an electro-active lens **1700** having a single interconnect structure. Lens **1700** includes a lens optic **1710** and an electro-active refractive matrix **1720**. Within electro-active refractive matrix **1720**, an insulator **1730** separates an activated partial field **1740** from a framed non-activated field (or region) **1750**. A single wire or conducting strip interconnect **1760** connects the activated field to a power supply and/or controller. Note that in most, if not all, embodiments, a single-interconnect structure has a single pair of electrical conductors coupling it to a power source.

FIG. **18** is a perspective view of an embodiment of an electro-active lens **1800** having a multi-grid structure. Lens **1800** includes a lens optic **1810** and an electro-active refractive matrix **1820**. Within electro-active refractive matrix **1820**, an insulator **1830** separates an activated partial field **1840** from a framed non-activated field (or region) **1850**. A plurality of wire interconnects **1860** connect the activated field to a power supply and/or controller.

When utilizing the smaller diameters for the partial field, it has been discovered that the electro-active thickness differential from edge to center of the partial field specific region when utilizing a single interconnect electro-active structure can be minimized. This has a very positive role in minimizing the electrical power needs, as well as number of electro-active layers required, especially for the single interconnect structure. This is not always the case for the partial field specific region whereby it utilizes a multi-grid electro-active structure. When utilizing a single interconnect electro-active structure, in many inventive embodiments, but not all, multiple single interconnect electro-active structures are layered within or on the lens so as to allow for multiple electro-active layers creating for example, a total combined electro-active power of +2.50D. In this inventive example only, five +0.50D single interconnect layers could be placed one on top of each other separated only in most cases, by insulating layers. In this way, the proper electrical power can create the necessary refractive index change for each layer by way of minimizing the electrical needs of one thick single interconnect layer which in some cases would be impractical to energize properly.

It should be further pointed out in the invention, certain embodiments having multiple single interconnect electro-active layers can be energized in a preprogrammed sequence to allow one to have the ability to focus over a range of distances. For example, two +0.50D single interconnect electro-active layers could be energized, creating a +1.00D intermediate focus to allow for a +2.00D presbyope to see at finger tip distance and then two additional +0.50D single interconnect electro-active layers could be energized to give the +2.00D presbyope the ability to read as close as 16 inches. It should be understood that the exact number of electro-active layers, as well as the power of each layer, can vary depending upon the optical design, as well as the total power needed to cover a specific range of near and intermediate vision distances for a specific presbyope.

Furthermore, in certain other inventive embodiments, a combination of either one or more single interconnect electro-active layers are present in the lens in combination with a multi-grid electro-active structural layer. Once again, this gives one the ability of focusing for a range of intermediate and near distances assuming the proper programming. Finally, in other inventive embodiments, only a multi-grid electro-active structure is utilized either in a hybrid or non-hybrid lens. Either way, the multi-grid electro-active structure in combination with a properly programmed electro-active eyewear controller, and/or one or more controller components, would allow for the ability to focus over a broad range of intermediate and near distances.

Also, semi-finished electro-active lens blanks that would allow for surfacing are also within the scope of the invention. In this case, either a decentered, centered, partial field electro-active refractive matrix incorporated with the blank, or a full field electro-active refractive matrix is incorporated with the blank and then surfaced to the correct prescription needed.

In certain embodiments the variable power electro-active field is located over the entire lens and adjusts as a constant spherical power change over the entire surface of the lens to accommodate one's working near vision focusing needs. In other embodiments the variable power field adjusts over the entire lens as a constant spherical power change while at the same time creating an aspherical peripheral power effect in order to reduce distortion and aberrations. In some of the embodiments mentioned above, the distance power is corrected by way of either the single vision, multifocal finished lens blanks, or the multifocal progressive lens optic. The electro-active optical layer corrects mainly for the working distance focusing needs. It should be noted this is not always the case. It is possible, in some cases, to utilize either a single vision, multifocal finished lens optic, or multifocal progressive lens optic for distance spherical power only and correct near vision working power and astigmatism through the electro-active refractive matrix or utilize either the single vision or multifocal lens optic to correct astigmatism only and correct the sphere power and near vision working power through the electro-active layer. Also, it is possible to utilize a piano, single vision, multifocal finished lens optic, or progressive multifocal lens optic and correct the distance sphere and astigmatism needs by way of the electro-active layer.

It should be pointed out that with the invention, the power correction needed, whether prismatic, spherical or aspheric power as well as total distance power needs, mid range power needs and near point power needs, can be accomplished by way of any number of additive power components. These include the utilization of a single vision or finished multifocal lens optic providing all the distance spherical power needs, some of the distance spherical power needs, all of the astigmatic power needs, some of the astigmatic power needs, all of the prismatic power needs, some of the prismatic power needs, or any combination of the above when combined with the electro-active layer, will provide for one's total focusing needs.

It has been discovered that the electro-active refractive matrix allows for the utilization of adaptive optic correction-like techniques to maximize one's vision through his or her electro-active lenses either prior or after final fabrication. This can be accomplished by way of allowing the patient or intended wearer to look through the electro-active lens or lenses and adjusting them manually, or by way of a special designed automatic refractor that almost instantly will measure conventional and/or non-conventional refractive error and will correct any remaining refractive error be it spherical, astigmatic, aberrations, etc. This technique will allow for the wearer to achieve 20/10 or better vision in many cases.

Furthermore, it should be pointed out that in certain embodiments a Fresnell power lens layer is utilized along with the single vision or multifocal or multifocal lens blank or optic as well as the electro-active layer. For example: the Fresnell layer is utilized to provide spherical power and thereby reduce lens thickness, the single vision lens optic to correct astigmatism, and the electro-active refractive matrix to correct for mid and near distance focusing needs.

As discussed above, in another embodiment a diffractive optic is utilized along with the single vision lens optic and the electro-active layer. In this approach the diffractive optic, which provides for additional focusing correction, further reduces the need for the electric power, circuitry, and thickness of the electro-active layer. Once again, the combination of any two or more of the following can be utilized in an additive manner to provide the total additive power needed for one's spectacle correction power needs. These being a Fresnell layer, conventional or non-conventional single vision or multifocal lens optic, diffractive optic layer, and electro-active refractive matrix or layers. Furthermore it is possible through an etching process to impart a shape and or effect of a diffractive or Fresnel layer into the electro-active material so as to create a non-hybrid or hybrid electro-active optic having a diffractive or Fresnel component. Also, it is possible using the electro-active lens to create not only conventional lens power, but also prismatic power.

It has also been discovered that utilizing either an approximate 22 mm or a 35 mm diameter round centered hybrid partial field specific electro-active lens design or an adjustable decentered hybrid electro-active partial field specific design being approximately 30 mm in diameter it is possible to minimize the electrical power circuitry needs, battery life, and battery size, reducing manufacturing costs and improving optical transparency of the final electro-active spectacle lens.

In one inventive embodiment, the decentered partial field specific electro-active lens is located so that the optical center of this field is located approximately 5 mm below the optical center of the single vision lens, while at the same time having the near working distance electro-active partial field being decentered nasally or temporally to satisfy the patient's correct near to near-intermediate and near-intermediate to far-intermediate working range pupillary distance. It should be noted that such a design approach is not limited to a circular design but could be virtually any shape that allowed the proper electro-active visual field area needed for one's vision needs. For example, the design could be oval, rectangular, square shaped, octagonal, partially curved, etc. What is important is the proper placement of the viewing area for either the hybrid partial field specific designs or hybrid full field designs that have the ability to achieve partial fields as well as non-hybrid full field designs that also have the ability to achieve partial fields.

In one exemplary embodiment, such as shown in FIG. **53***a,* the electro-active zone may be de-centered vertically such that a pupil **5310** is at or near the top of near vision zone **5320** when the lens is worn by a patient. A lens in this configuration may be advantageous by requiring only a slight eye or head movement to view items through the zone **5330** which may provide either near-intermediate, or far-intermediate vision correction or both. A patient may also access near vision for reading without a need or only a slight need for downward eye movement.

In yet another exemplary embodiment, the electro-active zone may be de-centered horizontally such as shown in FIG. **53***b.* In this embodiment the near vision zone **5320** and intermediate vision zone **5330**, which may be near-intermediate, or far-intermediate, are de-centered nasally as shown for a patients' right eye as viewed looking toward the patient. The nasal de-centering may allow for a natural inward rotation of the eye which occurs during reading tasks. In this embodiment the nasal de-centering is about 2 mm, although this distance is by way of example only and may vary depending on the patient.

In still yet another exemplary embodiment of a de-centered electro-active zone, the electro-active zones

5320 and **5330** may be de-centered both vertically and horizontally as shown in FIG. **53***c*. This exemplary embodiment may provide access to near-intermediate, and far-intermediate vision without much or any head or eye movement, while at the same time account for a natural inward rotation of the eye during reading tasks.

Yet another exemplary embodiment is shown in FIG. **53***d*. This embodiment demonstrates de-centering the electro-active zones **5320** and **5330** to place the pupil **5310** outside the bounds of the near vision zone **5320** and within zone **5330**. This embodiment provides for access to near-intermediate, or far-intermediate vision without any head or eye movement for viewing objects directly in front of the pupil, such as viewing a computer monitor for example. A patient using the lens of this embodiment may still access the near vision zone for reading through slight eye or head movement.

It should be appreciated that these embodiments are by way of example only and may be varied for patient habits or viewing needs for example. Other placements of the electro-active zones with respect to the patient's pupil are easily created and fall within the scope of this invention. Likewise, the electro-active zones may be independently de-centered by different amounts. Likewise it is possible to turn the near zone completely off during near-intermediate and far-intermediate tasks, such that the placement of the pupil with regards to intermediate vision is less critical, because the entire area of zone **5330** and **5320** may possess near-intermediate or far-intermediate power only. However, in embodiments where it may be desirable to have near vision and near-intermediate vision or far-intermediate vision available simultaneously, the placement of the pupil within the electro-active zone will need to be carefully chosen based on the considerations described earlier to maximize the performance of the spectacle.

It has been discovered that the electro-active refractive matrix in many cases (but not all) is utilized having an uneven thickness. That is, the metallic and conductive surrounding layers are not parallel and the gel polymer thickness varies to create a convergent or divergent lens shape. It is possible to employ such a non-uniform thickness electro-active refractive matrix in a non-hybrid embodiment or in a hybrid mode with a single vision or multifocal lens optic. This presents a wide variety of adjustable lens powers through various combinations of these fixed and electrically adjustable lenses. In some inventive embodiments, the single interconnect electro-active refractive matrix utilizes non-parallel sides creating a non-uniform thickness of the electro-active structure. However, in most inventive embodiments, but not all, the multi-grid electro-active structure utilizes a parallel structure, which creates a uniform thickness of the electro-active structure.

To illustrate some of the possibilities, a convergent single vision lens optic may be bonded to a convergent electro-active lens to create a hybrid lens assembly. Depending upon the electro-active lens material used, the electrical voltage may either increase or reduce the refractive index. Adjusting the voltage up to reduce the index of refraction would change the final lens assembly power to give less plus power, as shown in the first row of Table 1 for different combinations of fixed and electro-active lens power. If adjusting the applied voltage up increases the index of refraction of the electro-active lens optic, the final hybrid lens assembly power changes as shown in Table 2 for different combinations of fixed and electro-active lens power. It should be noted that, in this embodiment of the invention, only a single applied voltage difference is required across the electro-active layer.

TABLE 1

S.V. or M.F. Lens Optic (Distance Vision)	Electro-Active Lens Power	Voltage Change	Index of Refractive Change	Final Hybrid Lens Assembly Power
+	+	−	−	Less Plus
+	−	−	−	More Plus
−	+	−	−	More Minus
−	−	−	−	Less Minus

TABLE 2

S.V. or M.F. Lens Optic (Distance Vision)	Electro-Active Lens Power	Voltage Change	Index of Refractive Change	Final Hybrid Lens Assembly Power
+	+	−	−	More Plus
+	−	−	−	Less Plus
−	+	−	−	Less Minus
−	−	−	−	More Minus

A possible manufacturing process for such a hybrid assembly follows. In one example, the electro-active polymer gel layer can be injection-molded, cast, stamped, machined, diamond turned, and/or polished into a net lens optic shape. The thin metallic layer is deposited onto both sides of the injection molded or cast polymer gel layer by, for example, sputtering or vacuum deposition. In another exemplary embodiment, the deposited thin metallic layer is placed on both the lens optic and the other side of the injection-molded or cast electro-active material layer. A conductive layer may not be necessary, but if it is, it may also be vacuum deposited or sputtered onto the metallic layer.

Unlike conventional bifocal, multifocal or progressive lenses where the near vision power segments need to be positioned differently for different multifocal designs the invention can always be placed in one common location. For unlike different static power zones utilized by the conventional approach, where the eye moves and the head tilts to utilize such zone or zones, the present invention allows one to either look straight ahead or slightly up or down, and the entire electro-active partial or full field adjusts to correct for the necessary near working distance. This reduces eye fatigue and head and eye movements. Furthermore, when one needs to look to the distance the adjustable electro-active refractive matrix adjusts to the correct power needed to clearly see the distant object. In most cases, this would cause the electro-active adjustable near working distance field to become of piano power, thus converting or adjusting the hybrid electro-active lens back to a distance vision correction lens or low power multifocal progressive lens correcting distance power. However, this is not always the case.

In some cases it may be advantageous to reduce the thickness of the single vision lens optic. For example, the central thickness of a plus lens, or the edge thickness of a minus lens, can be reduced by way of some appropriate distance power compensation in the electro-active adjustable layer. This would apply to a full field or mostly full field hybrid electro-active spectacle lens or in all cases of a non-hybrid electro-active spectacle lens.

Once again, it should be pointed out that the adjustable electro-active refractive matrix does not have to be located in a limited area but could cover the entire single vision or multifocal lens optic, whatever size area or shape is required of either one. The exact overall size, shape, and location of the electro-active refractive matrix is constrained only due to performance and aesthetics.

It has also been discovered and is part of the invention that by utilizing the proper front convex and back concave curves of the single vision or multifocal lens blank or optic it is possible to further reduce the complexity of electronics needed for the invention. By way of properly selecting the front convex base curves of the single vision or multifocal lens blank or optic it is possible to minimize the number of connecting electrodes needed to activate the electro-active layer. In some embodiments, only two electrodes are required as the entire electro-active field area is adjusted by a set amount of electrical power.

This occurs due to the change of refractive index of the electro-active material, which creates, depending upon the placement of the electro-active layer, a different power front, back, or middle electro-active layer. Thus the appropriate curvature relationship of the front and back curves of each layer influences the needed power adjustment of the electro-active hybrid or non-hybrid lens. In most, but not all, hybrid designs especially those not utilizing a diffractive or Fresnel component it is important that the electro-active refractive matrix does not have its front & back curves parallel to that of the single vision or multifocal semifinished blank or single vision or multifocal finished lens blank it is attached to. One exception to this is a hybrid design utilizing a multi-grid structure.

It should be pointed out that one embodiment is of a hybrid electro-active lens utilizing less than a full field approach and a minimum of two electrodes. Other embodiments utilize a multi-grid electro-active refractive matrix approach to create the electro-active refractive matrix which case multiple electrodes and electrical circuitry will be required. When utilizing a multi-grid electro-active structure, it has been discovered that for the boundaries of the grids that have been electrically activated to be cosmetically acceptable (mostly invisible), it may be necessary to produce a refractive index differential between adjacent grids of zero to 0.02 units of refractive index difference. Depending upon cosmetic demands, the range of refractive index differential could be from 0.01 to 0.05 units of refractive index differential but in most inventive embodiments the difference is limited, by way of a controller to a maximum of 0.02 or 0.03 units of refractive index difference between adjacent areas.

It is also possible to utilize one or more electro-active layers having different electro-active structures such as a single-interconnect structure and/or a multi-grid structure, which can react as needed once energized to create the desired additive end focusing power. For example only, one could correct for distance power of a full field by way of the anterior (electro-active layer, distal with respect to the wearer's eyes) and utilize the posterior (i.e. proximal) electro-active refractive matrix to focus for near vision range utilizing a partial field specific approach generated by the posterior layer. It should become readily apparent that utilizing this multi electro-active refractive matrix approach will allow for increased flexibility while keeping the layers extremely thin and reducing the complexity of each individual layer. Furthermore, this approach allows for sequencing the individual layers in as much as one can energize them all at one time, to generate a simultaneous variable additive focusing power effect. This variable focusing effect can be produced in a time lapsed sequence, so as to correct for mid-range focusing needs and near vision range focusing needs as one looks from far to near and then create the reverse effect as one looks from near to far.

The multi electro-active refractive matrix approach also allows for faster electro-active focusing power response time. This happens due to a combination of factors, one being the reduced electro-active material thickness needed for each layer of multi electro-active layered lens. Also, because a multi electro-active refractive matrix allows for breaking up the complexity of a master electro-active refractive matrix into two or more less complex individual layers which are asked to do less individually than the master electro-active layer.

The following describes the materials and construction of the electro-active lens, its electrical wiring circuitry, the electrical power source, the electrical switching technique, software required for focal length adjustment, and object distance ranging.

FIG. **19** is a perspective view of an exemplary embodiment of an electro-active refractive matrix **1900**. Attached to both sides of an electro-active material **1910** are metallic layers **1920**. Attached to the opposite side of each metallic layer **1920** are conductive layers **1930**.

The electro-active refractive matrix discussed above is a multilayer construction consisting of either a polymer gel or liquid crystal as the electro-active material. However, in certain inventive cases both a polymer gel electro-active refractive matrix and a liquid crystal electro-active refractive matrix are utilized within the same lens. For example: the liquid crystal layer may be utilized to create an electronic tint or sunglass effect and the polymer gel layer may be utilized to add or subtract power. Both the polymer gel and liquid crystal has the property that its optical index of refraction can be changed by an applied electric voltage. The electro-active material is covered by two nearly transparent metallic layers on either side, and a conductive layer is deposited on each metallic layer to provide good electrical connection to these layers. When a voltage is applied across the two conductive layers, an electric field is created between them and through the electro-active material, changing the refractive index. In most cases, the liquid crystal and in some cases the gels are housed in a sealed encapsulating envelope of a material selected from silicones, polymethacrylate, styrene, proline, ceramic, glass, nylon, mylar and others.

FIG. **20** is a perspective view of an embodiment of an electro-active lens **2000** having a multi-grid structure. Lens **2000** includes an electro-active material **2010** that can, in some embodiments, define a plurality of pixels, each of which can be separated by a material having electrical insulating properties. Thus, electro-active material **2010** can define a number of adjacent zones, each zone containing one or more pixels.

Attached to one side of electro-active material **2010** is a metallic layer **2020**, which has a grid array of metallic electrodes **2030** separated by a material (not shown) having electrical insulating properties. Attached to the opposite side (not shown) of electro-active material **2010** is a symmetrically identical metallic layer **2020**. Thus, each electro-active pixel is matched to a pair of electrodes **2030** to define a grid element pair.

Attached to metallic layer **2020** is a conductive layer **2040** having a plurality of interconnect vias **2050** each separated by a material (not shown) having electrical insulating prop-

erties. Each interconnect via **2050** electrically couples one grid element pair to a power supply and/or controller. In an alternative embodiment, some and/or all of interconnect vias **2050** can connect more than one grid element pair to a power supply and/or controller.

It should be noted that in some embodiments, metallic layer **2020** is eliminated. In other embodiments, metallic layer **2020** is replaced by an alignment layer.

In certain inventive embodiments the front (distal) surface, intermediate surface, and/or back surface can be made of a material comprising a conventional photochromatic component. This photochromatic component may or may not be utilized with an electronic produced tint feature associated as part of the electro-active lens. In the event that it is utilized it would provide an additive tint in a complimentary manner. It should be pointed out, however, in many inventive embodiments the photochromatic material is used solely with the electro-active lens without an electronic tint component. The photochromatic material can be included in an electro-active lens layer by way of the layer composition or added later to the electro-active refractive matrix or added as part of an outer layer either on the front or the back of the lens. Furthermore, the electro-active lenses of the invention can be hard-coated front, back, or both can be coated with an anti-reflection coating as desired.

This construction is referred to as a sub-assembly and it can be electrically controlled to create either a prismatic power, sphere power, astigmatic power correction, aspheric correction, or aberration correction of the wearer. Furthermore, the subassembly can be controlled to mimic that of a Fresnell or diffractive surface. In one embodiment, if more than one type of correction is needed, two or more sub-assemblies can be juxtaposed, separated by an electrically insulating layer. The insulating layer may be comprised of silicone oxide. In another embodiment, the same subassembly is utilized to create multiple power corrections. Either of the two sub-assembly embodiments just discussed can be made of two different structures. This first structural embodiment allows that each of the layers, the electro-active layer, conductor, and metal, are contiguous, that is, continuous layers of material, thus forming a single-interconnect structure. The second structural embodiment (as shown in FIG. **20**) utilizes metallic layers in the form of a grid or array, with each sub-array area electrically insulated from its neighbors. In this embodiment showing a multi-grid electro-active structure, the conductive layers are etched to provide separate electrical contacts or electrodes to each sub-array or grid element. In this manner, separate and distinct voltages may be applied across each grid element pair in the layer, creating regions of different index of refraction in the electro-active material layer. The details of design, including layer thickness, index of refraction, voltages, candidate electro-active materials, layer structure, number of layers or components, arrangement of layers or components, curvature of each layer and/or components is left for the optical designer to decide.

It should be noted that either the multi-grid electro-active structure or the single interconnect electro-active structures can be utilized as either a partial lens field or a full lens field. However, when a partial field specific electro-active refractive matrix is utilized, in most cases, an electro-active material having a closely matching refractive index as that of the partial field specific electro-active non-activated layer (the framing layer) is utilized laterally adjacent to and separated from the partial field specific electro-active region by an insulator. This is done to enhance the cosmetic nature of the electro-active lens by way of keeping the appearance of the entire electro-active refractive matrix appearing as one, in the unactivated state. Also, it should be pointed out that in certain embodiments, the framing layer is of a non-electro-active material.

The polymer material can be of a wide variety of polymers where the electro-active constituent is at least 30% by weight of the formulation. Such electro-active polymer materials are well known and commercially available. Examples of this material include liquid crystal polymers such as polyester, polyether, polyamide, (PCB) penta cyano biphenyl and others. Polymer gels may also contain a thermoset matrix material to enhance the processability of the gel, improve its adhesion to the encapsulating conductive layers, and improve the optical clarity of the gel. By way of examples only this matrix may be a cross-linked acrylate, methacrylate, polyurethane, a vinyl polymer cross-linked with a difunctional or multifunctional acrylate, methacrylate or vinyl derivative.

The thickness of the gel layer can be, for example, between about 3 microns to about 100 microns, but may be as thick as one millimeter, or as another example, between about 4 microns to about 20 microns. The gel layer can have a modulus of, for example, about 100 pounds per inch to about 800 pounds per inch, or as another example, 200 to 600 pounds per inch. The metallic layer can have a thickness of, for example, about 10^{-4} microns to about 10^{-2} microns, and as another example, from about 0.8×10^{-3} microns to about 1.2×10^{-3} microns. The conductive layer can have a thickness of, for example, on the order of 0.05 microns to about 0.2 microns, and as another example, from about 0.8 microns to about 0.12 microns, and as yet another example, about 0.1 microns.

The metallic layer is used to provide good contact between the conductive layer and the electro-active material. Those skilled in the art will readily recognize the appropriate metal materials that could be used. For example, one could use gold or silver.

In one embodiment, the refractive index of the electro-active material may vary, for example, between about 1.2 units and about 1.9 units, and as another example, between about 1.45 units and about 1.75 units, with the change in index of refraction of at least 0.02 units per volt. The rate of change in the index with voltage, the actual index of refraction of the electro-active material, and its compatibility with the matrix material will determine the percentage composition of the electro-active polymer into the matrix, but should result in a change of index of refraction of the final composition of no less than 0.02 units per volt at a base voltage of about 2.5 volts but no greater than 25 volts.

As previously discussed with the inventive embodiment utilizing a hybrid design, the sections of the electro-active refractive matrix assembly are attached to a conventional lens optic with an appropriate adhesive or bonding technique which is transparent to visible light. This bonding assembly can be by way of release paper or film having the electro-active refractive matrix pre-assembled and attached ready for bonding to the conventional lens optic. It could be produced and applied to the awaiting lens optic surface in-situ. Also, it could be applied pre-applied to the surface of a lens wafer, which is then adhesively bonded to the awaiting lens optic. It could be applied to a semi-finished lens blank which is later surfaced or edged for the appropriate size, shape as well as the appropriate total power needs. Finally, it could be casted onto a preformed lens optic utilizing SurfaceCasting techniques. This creates the electrically modifiable power of the invention. The electro-

active refractive matrix may occupy the entire lens area or only a portion of it.

The index of refraction of the electro-active layers can be correctly altered only for the area needed to focus. For example, in the hybrid partial field design previously discussed, the partial field area would be activated and altered within this area. Therefore, in this embodiment the index of refraction is altered in only a specific partial region of the lens. In another embodiment, that of a hybrid full field design, the index of refraction is altered across the entire surface. Similarly, the index of refraction is altered across the entire area in the non-hybrid design. As discussed earlier, it has been discovered that in order to maintain an acceptable optical cosmetic appearance the refractive index differential between adjacent areas of an electro-active optic should be limited to a maximum of 0.02 units to 0.05 units of refractive index differential, preferably 0.02 units to 0.03 units.

It is envisioned within the invention that in some cases the user would utilize a partial field and then want to switch the electro-active refractive matrix to a full field. In this case, the embodiment would be designed structurally for a full field embodiment; however, the controller would be programmed to allow for switching the power needs from a full field to a partial field and back again or vice versa.

In order to create the electric field necessary to stimulate the electro-active lens, voltage is delivered to the optical assemblies. This is provided by bundles of small diameter wires, which are contained in the edges of the frames of the spectacles. The wires run from a power source described below into the an electro-active eyewear controller, and/or one or more controller components, and to the frame edge surrounding each spectacle lens, where state-of-the-art wire bonding techniques used in semiconductor manufacturing link the wires to each grid element in the optical assembly. In the single wire interconnect structured embodiment, meaning one wire per conductive layer, only one voltage per spectacle lens is required and only two wires would be necessary for each lens. The voltage would be applied to one conductive layer, while its partner on the opposing side of the gel layer is held at ground potential. In another embodiment, an alternating current (AC) voltage is applied across opposing conductive layers. These two connections are easily made at or near the frame edge of each spectacle lens.

If a grid array of voltages is used, each grid sub-area in the array is addressed with a distinct voltage, and conductors connect each wire lead in the frame to a grid element on the lens. An optically transparent conducting material such as indium oxide, tin oxide, or indium tin oxide (ITO) may be used to form the conductive layer of the electro-active assembly which is used to connect the wires in the frame edges to each grid element in the electro-active lens. This method can be used regardless of whether the electro-active area occupies the entire lens region or only a portion of it.

One of the techniques for achieving pixelation in the multi-grid array design is to create individual mini-volumes of electro-active material, each with their own pair of driving electrodes to establish the electric field across the mini-volume. Another technique for achieving pixelation uses patterned electrodes for the conductive or metallic layer, grown on the substrate lithographically. In this way, the electro-active material can be contained in a contiguous volume, and the regions of different electric field creating the pixelation are defined entirely by the patterned electrodes.

To provide electric power to the optical assemblies, a source of electricity, such as a battery, is included in the design. The voltages to create the electric field are small, hence, the temples of the frames are designed to allow for the insertion and extraction of miniature bulk batteries which provide this power. The batteries are connected to the wire bundles through a multiplexing connection also contained in the frame temples. In another embodiment, conformal thin film batteries are attached to the surface of the frame temples with an adhesive that allows them to be removed and replaced when their charge is dissipated. An alternative would be to provide an AC adapter with an attachment to the frame-mounted batteries to allow in situ charging of either the bulk or conformal thin-film batteries when not in use.

An alternate energy source is also possible whereby a miniature fuel cell could be included in the spectacle frames to provide greater energy storage than batteries. The fuel cell could be recharged with a small fuel canister that injects fuel into a reservoir in the spectacle frames.

It has been discovered that it is possible to minimize the electrical power needs by way of utilizing an inventive hybrid multi-grid structure approach which comprises in most cases but not all, a partial field specific region. It should be pointed out, while one can utilize a hybrid partial field multi-grid structure, a hybrid full field multi-grid structure can be utilized as well.

In another inventive approach, whereby non-conventional refractive error such as aberrations are corrected, a tracking system is built into the eyewear, such as discussed above, and the proper enabling software and programming of the electro-active eyewear controller, and/or one or more controller components, housed in the electro-active eyewear is provided. This inventive embodiment both tracks one's line of sight, by way of tracking one's eyes, and applies the necessary electrical energy to the specific area of the electro-active lens being looked through. In other words, as the eyes move a targeted electrically energized area would move across the lens corresponding to one's line of sight directed through the electro-active lens. This would be manifested in several different lens designs. For example, the user could have a fixed power lens, an electro-active lens, or a hybrid of both types to correct for conventional (sphere, cylinder, and prism) refractive error. In this example, the non-conventional refractive error would be corrected by way of the electro-active refractive matrix being of a multi-grid structure whereby, as the eye moves the corresponding activated region of the electro-active lens would move with the eye. In other words, the eye's line-of-sight corresponding to the eye's movement, as it intersects the lens would move across the lens in relationship to the eye's movements.

In the above inventive example it should be pointed out that the multi-grid electro-active structure, which is incorporated into or on the hybrid electro-active lens can be of a partial field or a full field design.

It should be pointed out utilizing this inventive embodiment one can minimize the electrical needs by way of only electrically energizing the limited area being directly viewed through. Therefore, the smaller area being energized the less electrical power consumed for a given prescription at any one time. The non directly viewed area would, in most cases but not all, not be energized or activated and therefore, would correct for conventional refractive error that would get one to 20/20 vision correcting for example, myopia, hyperopia, astigmatism, and presbyopia. The targeted and tracked area in this inventive embodiment would correct for as much non-conventional refractive error as possible, that being irregular astigmatism, aberrations, and ocular surface

or layer irregularities. In other inventive embodiments the targeted and tracked area could correct for also some conventional error, as well. In several of the previous mentioned embodiments, this targeted and tracked area can be automatically located with the assistance of the controller, and/or one or more controller components, by way of either a range finder located in the eyewear tracking the eye movements, with a eye tracking system located in the eyewear or both a tracking system and a range finder system.

Although only a partial electro-active region is utilized in certain designs, the entire surface is covered with the electro-active material to avoid a circular line visible to the user in the lens in the nonactivated state. In some inventive embodiments, a transparent insulator is utilized to keep the electrical activation limited to the central area being activated and the unactivated peripheral electro-active material is utilized to keep the edge of the active region invisible.

In another embodiment, thin film solar cell arrays can be attached to the surface of the frames, and voltage is supplied to the wires and the optical grid by photoelectric effect using sunlight or ambient room lighting. In one inventive embodiment, solar arrays are used for primary power, with the miniature batteries discussed earlier included as back up power. When electrical power is not needed the batteries can be charged from the solar cells during these times in this embodiment. An alternative allows for an AC adapter and attachment to batteries with this design.

In order to provide a variable focal length to the user, the electro-active lenses are switchable. At least two switch positions are provided, however, more are provided if needed. In the simplest embodiment, the electro-active lenses are either on or off. In the off position, no current flows through the wires, no voltage is applied to the grid assemblies, and only the fixed lens power is utilized. This would be the case in a user requiring a far field distance correction, for example, assuming of course, the hybrid electro-active lens utilizes either a single vision or multifocal lens blank or optic which corrects for distance vision as part of its construction. To provide near vision correction for reading, the switch would be on, providing a predetermined voltage or array of voltages to the lenses, creating a positive add power in the electro-active assemblies. If a mid-field correction is desired, a third switch position can be included. The switch could be microprocessor controlled, or manually user controlled. In fact, there could be several additional positions included. In another embodiment, the switch is analog not digital, and provides continuous variance of the focal length of the lens by adjusting a knob or lever much like a volume control on a radio.

It may be the case that no fixed lens power is part of the design, and all vision correction is accomplished via the electro-active lens. In this embodiment, a voltage or array of voltages is supplied to the lens at all times if both a distance and near vision correction is needed by the user. If only a distance correction or reading accommodation is needed by the user, the electro-active lens would be on when correction is needed and off when no correction is needed. However, this is not always the case. In certain embodiments depending upon the lens design, turning off or down the voltage will automatically increase the power of the distance and or near vision zones.

In one exemplary embodiment, the switch itself is located on the spectacle lens frames and is connected to a controller, for example, an Application Specific Integrated Circuit, contained in the spectacle frames. This controller responds to different positions of the switch by regulating the voltages supplied from the power source. As such, this controller makes up the multiplexer discussed above, which distributes various voltages to the connecting wires. The controller may also be of an advanced design in the form of a thin film and be mounted like the battery or solar cells conformably along the surface of the frames.

In one exemplary embodiment, this controller, and/or one or more controller components, is fabricated and/or programmed with knowledge of the user's vision correction requirements, and allows the user to easily switch between different arrays of pre-determined voltages tailored for his or her individual vision requirements. This electro-active eyewear controller, and/or one or more controller components, is easily removable and/or programmable by the vision care specialist or technician and replaced and/or reprogrammed with a new "prescription" controller when the user's vision correction requirements change.

One aspect of the controller-based switch is that it can change the voltage applied to an electro-active lens in less than a microsecond. If the electro-active refractive matrix is manufactured from a fast-switching material, it is possible that the rapid change in focal length of the lenses may be disruptive to the wearer's vision. A gentler transition from one focal length to another may be desirable. As an additional feature of this invention, a "lag time" can be programmed into the controller that would slow the transition. Conversely, a "lead time" could be programmed into the controller that would speed the transition. Similarly, the transition could be anticipated by a predictive algorithm.

In any event, the time constant of the transition can be set so that it is proportional and/or responsive to the refractive change needed to accommodate the wearer's vision. For example, small changes in focusing power could be switched rapidly; while a large change in focusing power, such as a wearer quickly moving his gaze from a distant object to read printed material, could be set to occur over a longer time period, say 10–100 milliseconds. This time constant could be adjustable, according to the comfort of the wearer.

In any event, it is not necessary for the switch to be on the spectacles themselves. In another exemplary embodiment, the switch is in a separate module, possibly in a pocket in the user's clothing, and is activated manually. This switch could be connected to the spectacles with a thin wire or optical fiber. Another version of the switch contains a small microwave or radio-frequency short-range transmitter which sends a signal regarding switch position to a tiny receiver antenna mounted conformably on the spectacle frames. In both of these switch configurations, the user has direct but discreet control over the focal length variation of his or her spectacles.

In various exemplary embodiment, the switch is automatically controlled by a view detector, such as a range finding device located, for example, in the frame, on the frame, in the lens, and/or on the lens of the spectacles, and pointing forward toward the object to be perceived.

FIG. **21** is a perspective view of another inventive embodiment of electro-active eyewear **2100**. In this illustrative example, frames **2110** contain electro-active lenses **2120** that are connected by connecting wires **2130** to controller **2140** (integrated circuit) and power source **2150**. A range finder transmitter **2160** is attached to an electro-active lens **2120** and a range finder receiver **2170** is attached to the other electro-active lens **2120**. In various alternative embodiments, transmitter **2160** and/or receiver **2170** can be attached to any electro-active lens **2120**, attached to frame

2110, embedded in lens **2120**, and/or embedded in frame **2110**. Further, range finder transmitter **2160** and/or receiver **2170** can be controlled by controller **2140** and/or a separate controller (not shown). Similarly, signals received by receiver **2170** can be processed by controller **2140** and/or a separate controller (not shown).

In any event, this range finder is an active seeker and can utilize various sources such as: lasers, light emitting diodes, radio-frequency waves, microwaves, or ultrasonic impulses to locate the object and determine its distance. In one embodiment, a vertical cavity surface-emitting laser (VCSEL) is used as the light transmitter. The small size and flat profile of these devices make them attractive for this application. In another embodiment, an organic light emitting diode, or OLED, is used as the light source for the rangefinder. The advantage of this device is that OLEDs can often be fabricated in a way that they are mostly transparent. Thus, an OLED might be a preferable rangefinder design if cosmetics is a concern, since it could be incorporated into the lens or frames without being noticeable.

An appropriate sensor to receive the reflected signal off the object is placed in one or more positions on the front of the lens frames and connected to a tiny controller to compute the range. In another embodiment, a single device can be fabricated to act in dual mode as both emitter and detector, and connected to the range computer. This range is sent via a wire or optical fiber to the switching controller located in the lens frames or a wireless remote carried on oneself and analyzed to determine the correct switch setting for that object distance. In some cases, the ranging controller and switching controller may be integrated together.

It should be appreciated that in certain situations, the range finder device may have difficulty switching the focal length of the electro-active lens when the wearer desires to moves from one item of focus to another. For example, the range finder transmitter and range finder receiver may require extra head movement by the wearer of the lenses before the lenses switch one vision correction to another. Alternatively, "false switching" may occur when the lenses switch from the vision correction actually needed by the wearer to a vision correction that is not appropriate. For example, when the lenses switch the vision correction from distance correction to far-intermediate or near-intermediate or near correction, instead of switching to the distance correction which was what the wearer actually required.

Accordingly, in another exemplary embodiment, the range finder transmitter and range finder receiver may selectively be covered with additional lenses for controlling the transmitted beam width produced by the transmitter, and the acceptance cone accepted by the receiver.

FIG. **44***a* is an exploded perspective view of an integrated power source, controller and range finder in accord with another alternative embodiment of the present invention. As shown in FIG. **44***a,* system **4400** includes range finder device **4420**, which is coupled to controller **4440**, which is in turn coupled to power source **4460**. FIG. **44***b* is a side sectional view of system **4400** of FIG. **44***a* along Z–Z' in accord with one embodiment of the present invention. As shown in FIG. **44***b,* range finder device **4420** is comprised of range finder transmitter **4424** and range finder receiver **4428**. In this exemplary embodiment, range finder transmitter **4424** and range finder receiver **4428** are transmitter and receiver diodes, respectively, which may take the form of IR laser diodes, LEDs or other non-visible radiation sources, for example. In this illustrative embodiment, transmitter **4424** has been selectively covered with transmission lens **4426** to control the transmitted beam width produced by transmitter **4424**. Similarly, receiver **4428** may be selectively covered with receiving lens **4430** to control the acceptance cone accepted by receiver **4428**. It should be appreciated that the acceptance region, or cone, of receiver **4428** includes the solid angle over which light rays approaching the range finder device will be able to reach receiver **4428** once they pass through either a receiving lens, an aperture, or other device covering receiver **4428**. A protective window may shield the internal components of range finder device **4420**, and more specifically, the transmitter and receiver, from the user's environment, while not affecting the function of the internal components.

FIG. **45** is a side view of the range finder transmitter **4424** of FIG. **44***b* in accord with one embodiment of the present invention. As shown in FIG. **45**, transmission lens **4426** has a selected divergent power to diverge the beam B produced by transmitter **4424** to a given pattern width D for a given working distance L. Accordingly, the width of the beam produced by transmitter **4424** is optimized for given working distances for reading and intermediate vision, which minimizes the need for extra head movement, while avoiding false switching by not making the beam excessively large.

FIG. **46** is a side view of the range finder receiver **4428** of FIG. **44***b* in accord with one embodiment of the present invention. As shown in FIG. **46**, receiver **4428** is selectively covered with receiving lens **4430**, which has slit aperture **4432** formed within it. The use of receiving lens **4430** with slit aperture **4432** decreases the received pattern to a substantially rectangular field, rather than the full view that would be detected if receiving lens **4430** was not fitted over receiver **4428**. In this embodiment, receiving lens **4430** is constructed of a material, such as an opaque material, that would prevent receiver **4428** from receiving any reflected beam, with the exception of those traveling through slit aperture **4432**.

It should be appreciated that the above embodiments with transmission lens **4426** covering transmitter **4424** and receiving lens **4430** covering receiver **4428** are merely illustrative, and that other embodiments that manipulate the transmission beam of transmitter **4424** or the acceptance cone of the receiver **4428** may be employed to further reduce false switching, or improve the performance of optical system **4400**. For example, other methods of restricting the acceptance cone or the received pattern of the receiver include employing other geometrically shaped apertures, variable shutters, lenses, or devices restricting the passage of light rays onto receiver **4428**. It should be also appreciated that placing lenses over the transmitter and receiver is optional, and any combination of the above lens may be provided in accordance with the invention. For example, in at least one further embodiment, the receiving lens **4430** used to selectively cover receiver **4428** is optional. Similarly, in at least one further embodiment, the transmission lens **4426** used to selectively cover transmitter **4424** is optional. In the exemplary embodiments described above, the need for additional head movement, and the occurrence of false switching, are both minimized by increasing the width of the transmitted beam produced by the range finder transmitter, and optionally, manipulating how the reflected beam is presented to the range finder receiver.

In another exemplary embodiment, the switch can be controlled by a small but rapid movement of the user's head. This would be accomplished by including another view detector, such as a tiny micro-gyroscope or micro-accelerometer in the temple on the lens frames. A small,

rapid shake or twist of the head would trigger the micro-gyro or micro-accelerometer and cause the switch to rotate through its allowed position settings, changing the focus of the electro-active lens to the desired correction. For example, upon detection of movement by either the micro-gyroscope or micro-accelerometer, the controller may be programmed to provide power to the range finder device so that the observed field may be interrogated by the range finder device to determine if a change in vision correction is required. Similarly, following a predetermined interval, or period of time in which no head movement is detected, the range finder device may be turned off. Furthermore, in at least one embodiment, following the detection of movement and use of the range finder device, the range finder device may be turned on.

In another exemplary embodiment, another view detector, such as a tilt switch, may be employed to determine whether the user's head is tilted down, or up, at a given angle above or below a posture that would be indicative of someone looking straight ahead in the distance. For example, an illustrative tilt switch may include a mercury switch mounted in the controller that closes a circuit that provides power to the rangefinder, and/or the controller, only when the patient is looking up or down a predetermined angle away from a horizontal. As lenses may be designed for distance vision correction in the non-powered state, in at least one embodiment, the range finder device may be configured to operate and switch the electro-active lens from distance correction to another state (such as near or intermediate correction) when the user's head is tilted downward or upward at the predetermined angle away from horizontal. Additionally, the lenses may employ an additional requirement that an object be sensed in the near or intermediate distance for some predetermined period of time before switching occurred. The tilt switch could also be used to set a logic level high that is then AND gated (in positive logic) with a logical level set by the rangefinder that indicates whether an object is in the near or intermediate distance.

FIGS. **47***a*–**47***c* are side views of a wearer of an optical lens system in accord with one embodiment of the present invention. As shown in FIGS. **47***a,* the wearer of an optical lens system may adjust his head from horizontal to an upward head tilt angle (θ_{up}), and from horizontal to a downward head tilt angle (θ_{down}). FIG. **47***b* illustrates the wearer with his head tilted down at the downward head tilt angle (θ_{down}). FIG. **47***c* illustrates the wearer with his head tilted up at the upward head tilt angle (θ_{up}). In one exemplary embodiment, the tilt switch may close (and provide power to the range finder device, or the controller, or both) when the wearer's head moves up or down from the horizontal by about 5 to 15 degrees from the horizontal position, and preferably, about 10 degrees from the horizontal position. In one further embodiment, the tilt switch may close when the wearer's head moves up or down from the horizontal by about 15 to 30 degrees from the horizontal position, and preferably, about 20 degrees from the horizontal position.

It should be appreciated that the above-described embodiments employing tilt switches may be optimized based on the needs or desires of the wearer. For example, the wearer may choose to have the angle of deviation from the horizontal position required to close the switch differ in the upward or downward directions. Thus, the angle for the upward tilt to close the switch may be equal to angle for downward tilt, or they could differ from each other by several degrees. Additionally, the tilt switch may also be optimized by providing that it would only activate the rangefinder (or provide power to the range finder device, or the controller, or both) when the wearer tilts his head in the downward direction, or alternatively, only when the wearer tilts his head in the upward direction. This latter case is unlikely, since everyone typically tilts their head down slightly to read.

In another exemplary embodiment, the system utilizes a tilt switch to determine the angle of tilt of the wearer's head. The angle of tilt, either downward or upward, may be sent to the controller which determines whether the tilt is greater than a predetermined angle. Thus, the controller could selectively power the range finder device upon the tilt crossing the tilt threshold associated with the tilt switch. Similarly, in further embodiments, a micro-gyroscope or micro-accelerometer could be employed in a similar fashion. For example, a micro-gyroscope or micro-accelerometer may produce an output that the controller could use to determine the position of the wearer's head, and adjust power to the range finder device accordingly.

Yet another exemplary embodiment uses a combination of microgyroscope with a manual switch. In this embodiment, the microgyroscope is utilized for mostly reading and visual functions below the 180 so as to react to one's head tilt. Thus, when one's head tilts, the microgyroscope sends a signal to the controller indicating the degree of head tilt, which is then converted into increased focusing power, depending on the severity of the tilt. The manual switch, which can be remote, is used for overriding the microgyroscope for certain visual functions at or above the 180, such as working on a computer.

In still another exemplary embodiment, a combination of a rangefinder and a microgyroscope is utilized. The microgyroscope is utilized for near vision, and other vision functions below the 180, and the rangefinder is used for viewing distances which are above the 180 and are of a viewing distance of, for example, four feet or less. In further embodiments, a range finder device may be used in combination with a tilt switch, micro-gyroscope or micro-accelerometer to determine whether the electro-active lens should be switched. In these embodiments, the controller may use a logic level for each of the integrated components, such as the tilt switch, gyroscope or accelerometer, with the additional requirement that the range finder device must obtain a new viewing distance before switching would occur, for example.

As an alternative to the manual switch or range finder design to adjust the focusing power of the electro-active assembly, another exemplary embodiment utilizes an eye-tracker to measure inter-pupillary distance and detect the viewing distance. As the eyes focus on distant or near objects, this distance changes as the pupils converge or diverge. At least two light-emitting diodes and at least two adjacent photo-sensors to detect reflected light from the diodes off the eye are placed on the inside frame near the nose bridge. This system can sense the position of the edge of the pupil of each eye and convert the position to inter-pupillary distance to calculate the distance of the object from the user's eye plane. In certain embodiments three or even four light emitting diodes and photo sensors are used to track eye movements.

It should be appreciated that, in further embodiments, any combination of the various mechanisms described herein, which minimize false switching and excessive wearer movements to initiate switching, may be combined in any fashion as desired to meet the needs of the skilled artisan and the wearer of the optical lens system. Thus, any of the logical

levels or switching mechanisms may be customized to fit the particular needs of a given user.

In addition to vision correction, the electro-active refractive matrix can also be used to give a spectacle lens an electro-chromic tint. By applying an appropriate voltage to an appropriate gel polymer or liquid crystal layer, a tint or sunglass effect can be imparted to the lens, which alternates the light transmission somewhat through the lens. This reduced light intensity gives a "sunglass" effect to the lens for the comfort of the user in bright, outdoor environment. Liquid crystal compositions and gel polymers with high polarizability in response to an applied electric field are most attractive for this application.

In some inventive embodiments, this invention may be used in locations where temperature variations may be sizeable enough to affect the index of refraction of the electro-active layer. Then, a correction factor to all of the supplied voltages to the grid assemblies would have to be applied to compensate for this effect. A miniature thermistor, thermocouple, or other temperature sensor mounted in or on the lens and/or frame and connected to the power source senses changes in temperature. The controller converts these readings into voltage changes needed to compensate for the change in refractive index of the electro-active material.

However, in certain embodiments electronic circuitry is actually built into or on the lens surface for the purpose of increasing the temperature of the electro-active refractive matrix or layers. This is done to further reduce the refractive index of the electro-active layers thus maximizing lens power changes. Increased temperature can be utilized either with or without voltage increases thus giving additional flexibility in being able to control and change the lens power by way of refractive index changes. When temperature is utilized it is desirable to be able to measure, get feed back and control the temperature which has been deliberately applied.

In the case of either a partial or full field grid array of individually addressed electro-active regions, many conductors may be necessary to multiplex specific voltages from the controller to each grid element. For ease of engineering these interconnects, the invention locates the controller in the front section of the spectacle frames, for example, in the nose bridge area. Thus, the power source, which is located in the temples, will be connected to the controller by only two conductors through the temple-front frame hinge. The conductors linking the controller to the lenses can be totally contained within the front section of the frame.

In some embodiments of the invention, the spectacles may have one or both spectacle frame temples, parts of which are easily removable. Each temple will consist of two parts: a short one which remains connected to the hinge and front frame section and a longer one which plugs into this piece. The unpluggable part of the temples each contain an electrical power source (battery, fuel cell, etc.) and can be simply removed and reconnected to the fixed portion of the temples. These removable temples are rechargeable, for example, by placing in a portable A.C. charging unit which charges by direct current flow, by magnetic induction, or by any other common recharging method. In this manner, fully charged replacement temples may be connected to the spectacles to provide continuous, long-term activation of the lenses and ranging system. In fact, several replacement temples may be carried by the user in pocket or purse for this purpose.

In many cases, the wearer will require spherical correction for distance, near, and/or near or far intermediate vision. This allows a variation of the fully interconnected grid array lens, which takes advantage of the spherical symmetry of the required corrective optic. In this case, a special geometrically shaped grid consisting of concentric rings of electro-active regions may comprise either the partial region or full field lens. The rings may be circular or non-circular such as, for example, elliptical. This configuration serves to reduce substantially the number of required electro-active regions that must be separately addressed by conductor connections with different voltages, greatly simplifying the interconnect circuitry. This design allows for the correction of astigmatism by employing a hybrid lens design. In this case, the conventional optic may provide cylindrical and/or astigmatic correction, and the concentric ring electro-active refractive matrix may provide the spherical distance and/or near vision correction.

This concentric ring, or toroidal zone, embodiment allows for great flexibility in adapting the electro-active focusing to the wearer's needs. Because of the circular zone symmetry, many more thinner zones can be fabricated without increasing the wiring and interconnect complexity. For example, an electro-active lens made from an array of 4000 square pixels will require wiring to address all 4000 zones; a need to cover a circular partial region area of 35 millimeters diameter will yield a pixel pitch of about 0.5 millimeters. On the other hand, an adaptive optic made from a pattern of concentric rings of the same 0.5 millimeter pitch (or ring thickness) will require only 35 toroidal zones, greatly reducing the wiring complexity. Conversely, the pixel pitch (and resolution) can be decreased to only 0.1 millimeters and only increase the number of zones (and interconnects) to 175. The greater resolution of the zones may translate into greater comfort for the wearer, since the radial change in refractive index from zone to zone is smoother and more gradual. Of course, this design restricts one to only vision corrections which are spherical in nature.

It has been further discovered that the concentric ring design can tailor the thickness of the toroidal rings so as to place the greatest resolution at the radius where it is needed. For example, if the design calls for phase-wrapping, i.e., taking advantage of the periodicity of light waves to achieve greater focusing power with materials of limited refractive index variation, one can design an array with narrower rings at the periphery and wider rings at the center of the circular partial region of the electro-active area. This judicious use of each toroidal pixel yields the greatest focusing power obtainable for the number of zones utilized while minimizing the aliasing effect present in low-resolution systems that employ phase-wrapping.

In another embodiment of this invention, it may be desired to smooth the sharp transition from the far-field focus region to the near vision focus region in hybrid lenses employing a partial electro-active area. This occurs, of course, at the circular boundary of the electro-active region. In order to accomplish this, the invention would be programmed to have regions of-less power for near vision in the periphery of the electro-active region. For example, consider a hybrid concentric ring design with a 35 mm diameter electro-active region, where the fixed focal length lens provides a distance correction, and the electro-active region provides a +2.50 add power presbyopic correction. Instead of maintaining this power all the way out to the periphery of the electro-active region, several toroidal regions or "bands", each containing several addressable electro-active concentric ring zones, would be programmed to have decreasing power at larger diameters. For example, during activation one embodiment might have a central 26 mm

diameter circle of +2.50 add power, with a toroidal band extending from 26 to 29 mm diameter with +2.00 add power, another toroidal band extending from 29 to 32 mm diameter with +1.5 add power, surrounded by a toroidal band extending from 32 to 35 mm diameter with +1.0 add power. This design may be useful in providing some users with a more pleasant wearing experience.

When utilizing an ophthalmic spectacle lens one generally utilizes the top approximately one-half of the lens for far distance viewing. Approximately 2 to 3 mm above the mid-line and 6 to 7 mm below the mid-line for intermediate distance viewing and from 7–10 mm below the mid-line for near distance viewing.

Aberrations created in the eye appear different for distances from the eye and need to be corrected differently. An object's distance that is being viewed is directly related to the specific aberration correction needed. Therefore, an aberration created from the eye's optical system will need approximately the same correction for all far distances, approximately the same correction for all far-intermediate distances, approximately the same correction for all near-intermediate distances, and approximately the same correction for all near point distances. Therefore, the invention allows for the electro-active adjustment of the lens to correct certain aberrations of the eye, in three or four sections of the lens (distance section, intermediate section and near section), as opposed to trying to adjust the electro-active lens grid-by-grid as the eye and the eye's line of sight moves across the lens.

FIG. **22** is a front view of an embodiment of an electro-active lens **2200**. Within lens **2200** are defined various regions proving different refractive corrections. Below mid-line B—B, several near distance corrective regions **2210** and **2220** each having a different corrective power, are surrounded by a single intermediate distance corrective region **2230**. Although only two near distance corrective regions **2210** and **2220** are shown, any number of near distance corrective regions can be provided. Similarly, any number of intermediate distance corrective regions can be provided. Above mid-line B—B, a far distance corrective region **2240** are provided. Regions **2210**, **2220**, and **2230** can be activated in a programmed sequence manner, to save power for example, or in a static on-off manner similar to a conventional tri-focal. When looking from far to near, or from near to far, lens **2200** can help the wearer's eye focus, by smoothing the transition between the various focal lengths of the various regions. Thereby, the phenomenon of "image jump" is relieved or greatly reduced.

Image jump and discontinuity between vision correction zones may alternatively be lessened through the use of an electro-active blending zone. An exemplary embodiment is shown in FIG. **54**. The exemplary embodiment shown here illustrates an electro-active region placed within a fixed distance optic **5340**. A near vision zone **5320** is blended into a zone **5330**, which may provide near-intermediate vision, far-intermediate correction or both, over a blending zone **5420**. The blending zone **5420** may be an electro-active zone of any width, but is preferably about **6**mm wide or less. The blending zone **5420** may hide or mask discontinuity between zones and reduce image jump by providing a smooth transition as the patient's line of sight passes out of one vision correction zone into another. Another blending zone **5430** may be present between the zone **5330** and the distance vision zone **5340**. Blending zone **5430** may be of any width, but is preferably 10 mm wide or less. In any blending zone, the blending zone could be a linear blend of optical power reduction, or a blend that is represented by a polynomial or exponential function. In embodiments where the near and near-intermediate or far-intermediate powers are present simultaneously, the blending zone **5420** may transition from near power to near-intermediate or far intermediate power. In embodiments where the near vision zone is activated in the absence of a near-intermediate or far-intermediate zone, then the blending zone **5420** may provide a transition from near vision power to distance vision power. In most embodiments, blending zone **5430** may provide a transition from near-intermediate or far-intermediate power to distance power.

Though the pupil **5310** as shown in FIG. **54** is centered relative to the electro-active zones, the lens may be positioned such that pupil is positioned in various other manners with respect to electro-active zones of the lens as described elsewhere herein.

FIG. **23** is a front view of an embodiment of another electro-active lens **2300**. Within lens **2300** are defined various regions proving different refractive corrections. Below mid-line C—C, a single near distance corrective region **2310** is surrounded by a single intermediate distance corrective region **2320**. Above mid-line C—C, is located a single far distance corrective region **2330**.

FIG. **24** is a front view of an embodiment of an embodiment of another electro-active lens **2400**. Within lens **2400** are defined various regions providing different refractive corrections. A single near distance corrective region **2410** is surrounded by a single intermediate distance corrective region **2420**, which is surrounded by a single far distance corrective region **2430**.

FIG. **25** is a side view of an embodiment of another electro-active lens **2500**. Lens **2500** includes a conventional lens optic **2510** to which several full field electro-active regions **2520**, **2530**, **2540**, and **2550** are attached, each separated from the adjacent regions by insulating layers **2525**, **2535**, and **2545**.

FIG. **26** is a side view of an embodiment of another electro-active lens **2600**. Lens **2600** includes a conventional lens optic **2610** to which several partial field electro-active regions **2620**, **2630**, **2640**, and **2650** are attached, each separated from the adjacent regions by insulating layers **2625**, **2635**, and **2645**. Framing region **2660** surrounds electro-active regions **2620**, **2630**, **2640**, and **2650**.

Returning to the discussion of diffractive electro-active lenses, an electro-active lens for correcting refractive error can be fabricated using an electro-active refractive matrix adjacent to a glass, polymer, or plastic substrate lens which is imprinted or etched with a diffractive pattern. The surface of the substrate lens which has the diffractive imprint is directly in contact with the electro-active material. Thus, one surface of the electro-active refractive matrix is also a diffractive pattern which is the mirror image of that on the lens substrate surface.

The assembly acts as a hybrid lens, such that the substrate lens always provides a fixed corrective power, typically for distance correction. The index of refraction of the electro-active refractive matrix in its unactivated state is nearly identical to that of the substrate lens; this difference should be 0.05 index units or less. Thus, when the electro-active lens is unactivated, the substrate lens and electro-active refractive matrix have the same index, and the diffractive pattern is powerless, and provides no correction (0.00 diopter). In this state, the power of the substrate lens is the only corrective power.

When the electro-active refractive matrix is activated, its index changes, and the refractive power of the diffraction

pattern becomes additive to the substrate lens. For example, if the substrate lens has a power of −3.50 diopter, and the electro-active diffractive layer has a power when activated of +2.00 diopter, the total power of the electro-active lens assembly is −1.50 diopter. In this way, the electro-active lens allows for near vision or reading. In other embodiments, the electro-active refractive matrix in the activated state may be index matched to the lens optic.

Through the use of stacked electro-active regions, multiple zones for viewing correction may be available simultaneously. FIG. **55** shows an exemplary embodiment of an electro-active lens with two electro-active vision correction zones **5520** and **5530**, as well as far distance correction zone **5540** which may be provided by a fixed distance optic. These zones may represent one or more stacked electro-active regions, with different viewing correction in the zones **5520** and **5530** depending upon which electro-active regions are activated, as further described below.

In some embodiments a far-intermediate vision correction zone may be created. This far-intermediate correction zone may provide enhanced viewing correction for objects which are too far away for comfortable near-intermediate viewing correction, but are also too close for particularly effective far viewing correction. Generally these distances may be from about 5 feet to about 15 feet.

An exemplary embodiment of an electro-active lens with stacked electro-active regions is shown in FIG. **55***a*. Lens **5500** has two electro-active regions. Each region may provide half of the optical power for near vision correction. As shown in FIG. **55***a*, one region may be smaller in area than the other, however both regions could be of the same size. When both regions are activated and an individual views through both of them, near vision correction may be present, while if the individual views through only one region, near-intermediate correction may be present. Alternatively, if only one of the two regions is activated, such as **5565** but not **5560** for example, near-intermediate vision is present over the entire electro-active region.

The far distance correction zone **5540** may be provided by a fixed distance optic, such as one having a power of +4.0 diopter for a patient with a hyperopic condition, for example. As discussed elsewhere herein, this may provide a "fail-safe" mode such that in the event of a power loss or other problem to any or all of the electro-active regions, a patient may still have distance viewing. As a further example, the patient may also have a vision problem such as presbyopia which requires respective powers of +2.5 diopter for near vision correction, +1.25 diopter for near-intermediate vision correction, and +0.625 diopter for far intermediate vision correction.

In this example, the total maximum power of the electro-active portion of the lens may be +2.5 diopter to correct for the near vision problem. To provide near viewing correction, all electro-active regions may be activated producing a total power of +6.5 diopter when viewing an object through a near correction zone, i.e. looking through all three activated electro-active regions (+4.0 diopter to correct far vision, plus +2.5 diopter to correct for near vision). The total power of the electro-active regions may be additive such that if the patient is instead looking at something in the near-intermediate range, regions **5565** and **5570** may be independently activated without activating region **5560** providing a total power increase of +1.25 diopter, or an overall vision correction of +5.25 diopter. Likewise, if a patient were viewing an object at a far-intermediate range, regions **5565** or **5570** may be activated to provide a total correction of +4.625 diopter. When viewing objects outside of the electro-active zone, the correction would be that provided by the fixed distance optic, in this example +4.0 diopter.

This example is for illustration purposes only and works equally well with other vision prescriptions. The above-described example from the exemplary embodiment is further illustrated in Table 3, below. The table also demonstrates the optical power of the electro-active regions for various other distance vision problems.

TABLE 3

	All regions off	All regions on		Region 5565 and	Region 5565 or
Distance Condition	Whole Lens is Distance Power	Near Power −6 mm < y < +6 mm	Near Intermediate +6 mm < y < +14 mm −6 mm < y < −14 mm	5570 on Near Intermediate −14 mm < y < +14 mm	5570 on Far-Intermediate 14 mm < y < −14 mm
Hyperopic	+4.0 D	+6.5 D	+5.25 D	+5.25 D	+4.625 D
Emetropic	0.0 D	+2.5 D	+1.25 D	+1.25 D	+0.625 D
Myopic	−4.0 D	−1.5 D	−2.75 D	−2.75 D	−3.375 D

An exemplary embodiment of an electro-active lens having a far-intermediate vision correction zone is shown in FIG. **55***b*. Lens **5500** has a single near correction region **5560** and two intermediate correction regions **5565** and **5570**, all of which are electro-active and which may be stacked upon each other. Near correction region **5560** may provide 50% of the addition power needed to provide near viewing correction. The balance may be split equally between the two intermediate correction regions **5565** and **5570**. A far-intermediate correction may be present when only one of regions **5565** or **5570** are activated and near region **5560** is inactive. Near-intermediate correction may be present when near region **5560** is inactive and both of regions **5565** or **5570** are active. Near vision correction may be present when near region **5560** and both intermediate regions **5565** and **5570** are active.

Again the powers described in the example and table are exemplary only, as are the sizes and shapes of the electro-active regions, which, although shown in the FIG. **55***b* as circles having diameters of 12 mm and 28 mm, could vary depending on the viewing needs of a patient.

The additional optical power of the far-intermediate region may range from about 0.25 to about 2.0 diopter, preferably between 0.25 and 0.75 which represents about 50% of the near-intermediate power, which is traditionally about half of the prescribed near vision powers. An additional advantage of an additional stacked electro-active region for far-intermediate power is that when added to a near or near-intermediate correction power, the far-intermediate power may be additive to create a "strong" near and/or a "strong" near-intermediate power.

Regions **5560**, **5565** and **5570** may all be the same size or they may be different sizes. In the case of stacked electro-

active regions when all are of the same size, a blending area may not be desired between near to near-intermediate to far-intermediate viewing. In embodiments in which far viewing correction is provided through a fixed optic, the only blending which may be desirable is from the far region to the electro-active region, i.e. transitioning from near, near-intermediate, or far-intermediate directly to far.

It should be appreciated that the order of the regions **5560**, **5565**, and **5570** is not critical and that the invention may work equally well in any case. For instance, although FIG. **55***b* shows region **5560** as the distal-most electro-active region from the eye, it may be placed in between regions **5565** and **5570**. Likewise, region **5560** may be positioned as the proximal-most electro-active region to the eye. Regardless of how the regions are stacked to create viewing correction zones, performance of the zones may be unaffected.

In yet another exemplary embodiment, near and near-intermediate vision correction may be provided by a single electro-active region. An example of this embodiment is shown in FIG. **56**, in which regions **5550** and **5570** may be stacked upon each other. Region **5550** may provide both a near and near-intermediate vision correction zone. In this embodiment, only one of regions **5550** or **5570** may generally be activated at one time. If region **5550** is activated and region **5570** is not activated, the lens may provide near and near-intermediate vision correction. A near vision correction zone is produced for looking through the portion of the lens which provides full power, in this example, the area of a circle having a 6 mm radius. A near-intermediate correction zone is produced for looking through the portion of the lens providing only the lesser near-intermediate power, in this example, the area of a circle having a 14 mm radius, minus the area of the near vision correction zone. Alternatively, if layer **5550** is not activated, but layer **5570** is activated, the lens may provide a far-intermediate vision correction zone. As in other embodiments, viewing outside of the electro-active regions may provide a far vision correction zone with an optical power of the fixed distance optic.

Although the vision correction regions of the exemplary embodiments discussed here are shown as circular, the regions may be of any shape, such as substantially rectangular, for example, as shown in FIG. **57**. As shown in this exemplary embodiment, both the near vision zone **5720** and vision zone **5730**, which may provide near-intermediate and/or far intermediate vision through multiple stacked zones of the same size as discussed above, may be substantially rectangular. The comers of the rectangles may be rounded. In this exemplary embodiment, the near vision zone **5720** may be about 8 mm in height and about 18 mm wide, thus having an area of about 144 mm square. Zone **5730** may be about 28 mm wide by about 28 mm high, thus having an area of about 784 mm square. Zone **5730** may have a useful height of approximately 10 mm when used with a near vision zone of the described dimensions. However, the dimensions described are exemplary only; other sizes and shapes are possible. The electro-active regions need not be concentrically stacked, and in some embodiments it may be desirable to offset one or more of the electro-active regions.

Electro-active layers that use liquid crystals are birefringent. That is, they display two different focal lengths in their unactivated state when exposed to unpolarized light. This birefringence gives rise to double or fuzzy images on the retina. There are two approaches to solving this problem. The first requires at least two electro-active layers to be used. One is fabricated with the electro-active molecules aligned longitudinally in the layer, while the other is fabricated with latitudinally oriented molecules in its layer; thus, the molecular alignment in the two layers is orthogonal to each other. In this manner, both polarizations of light are focused equally by both of the layers, and all light is focused at the same focal length.

This can be accomplished by simply stacking the two orthogonally-aligned electro-active layers or by an alternative design in which the center layer of the lens is a double-sided plate, i.e., with identical diffraction patterns etched on both sides. Electro-active material is then placed in a layer on both sides of the center plate, assuring that their alignments are orthogonal. Then a cover superstrate is placed over each electro-active refractive matrix to contain it. This provides a simpler design than superimposing two distinct electro-active/diffractive layers on top of each other.

A different alternative requires one to add a cholesteric liquid crystal to the electro-active material to give it a large chiral component. It has been found that a certain level of chiral concentration eliminates the in-plane polarization sensitivity, and obviates the need for two electro-active layers of purely nematic liquid crystal as a component in the electro-active material.

Turning now to the materials used for the electro-active layer, examples of material classes and specific electro-active materials that can be used for the electro-active refractive matrix and lens of the present invention are listed below. Other than the liquid crystal materials listed below in class I, we generally refer to each of these classes of materials as polymer gels.

Liquid Crystals

This class includes any liquid crystal film that forms nematic, smectic, or cholesteric phases that possess a long-range orientational order that can be controlled with an electric field. Examples of nematic liquid crystals are: pentylcyanobiphenyl (5CB), (n-octyloxy)-4-cyanobiphenyl (8OCB). Other examples of liquid crystals are the n=3, 4, 5, 6, 7, 8, 9, of the compound 4-cyano-4-n-alkylbiphenyls, 4-n-pentyloxy-biphenyl, 4-cyano-4"-n-alkyl-p-terphenyls, and commercial mixtures such as E7, E36, E46, and the ZLI-series made by BDH (British Drug House)-Merck.

Electro-Optic Polymers

This class includes any transparent optical polymeric material such as those disclosed in "Physical Properties of Polymers Handbook" by J. E. Mark, American Institute of Physics, Woodburry, N.Y., 1996, containing molecules having unsymmetrical polarized conjugated p electrons between a donor and an acceptor group (referred to as a chromophore) such as those disclosed in "Organic Nonlinear Optical Materials" by Ch. Bosshard et al., Gordon and Breach Publishers, Amsterdam, 1995. Examples of polymers are as follows: polystyrene, polycarbonate, polymethylmethacrylate, polyvinylcarbazole, polyimide, polysilane. Examples of chromophores are: paranitroaniline (PNA), disperse red 1 (DR 1), 3-methyl-4-methoxy-4'-nitrostilbene, diethylaminonitrostilbene (DANS), diethylthio-barbituric acid.

Electro-optic polymers can be produced by: a) following a guest/host approach, b) by covalent incorporation of the chromophore into the polymer (pendant and main-chain), and/or c) by lattice hardening approaches such as cross-linking.

Polymer Liquid Crystals

This class includes polymer liquid crystals (PLCs), which are also sometimes referred to as liquid crystalline polymers, low molecular mass liquid crystals, self-reinforcing polymers, in situ-composites, and/or molecular composites.

PLCs are copolymers that contain simultaneously relatively rigid and flexible sequences such as those disclosed in "Liquid Crystalline Polymers: From Structures to Applications" by W. Brostow, edited by A. A. Collyer, Elsevier, New-York-London, 1992, Chapter 1. Examples of PLCs are: polymethacrylate comprising 4-cyanophenyl benzoate side group and other similar compounds.

Polymer Dispersed Liquid Crystals

This class includes polymer dispersed liquid crystals (PDLCs), which consist of dispersions of liquid crystal droplets in a polymer matrix. These materials can be made in several ways: (i) by nematic curvilinear aligned phases (NCAP), by thermally induced phase separation (TIPS), solvent-induced phase separation (SIPS), and polymerization-induced phase separation (PIPS). Examples of PDLCs are: mixtures of liquid crystal E7 (BDH-Merck) and NOA65 (Norland products, Inc. NJ); mixtures of E44 (BDH-Merck) and polymethylmethacrylate (PMMA); mixtures of E49 (BDH-Merck) and PMMA; mixture of the monomer dipentaerythrol hydroxy penta acrylate, liquid crystal E7, N-vinylpyrrolidone, N-phenylglycine, and the dye Rose Bengal.

Polymer Stabilized Liquid Crystals

This class includes polymer-stabilized liquid crystals (PSLCs), which are materials that consist of a liquid crystal in a polymer network in which the polymer constitutes less than 10% by weight of the liquid crystal. A photopolymerizable monomer is mixed together with a liquid crystal and an UV polymerization initiator. After the liquid crystal is aligned, the polymerization of the monomer is initiated typically by UV exposure and the resulting polymer creates a network that stabilizes the liquid crystal. For examples of PSLCs, see, for instance: C. M. Hudson et al. Optical Studies of Anisotropic Networks in Polymer-Stabilized Liquid Crystals, Journal of the Society for Information Display, vol. 5/3, 1–5, (1997), G. P. Wiederrecht et al, Photorefractivity in Polymer-Stabilized Nematic Liquid Crystals, J. of Am. Chem. Soc., 120, 3231–3236 (1998).

Self-Assembled Nonlinear Supramolecular Structures

This class includes electro-optic asymmetric organic films, which can be fabricated using the following approaches: Langmuir-Blodgett films, alternating polyelectrolyte deposition (polyanion/polycation) from aqueous solutions, molecular beam epitaxy methods, sequential synthesis by covalent coupling reactions (for example: organotrichlorosilane-based self-assembled multilayer deposition). These techniques usually lead to thin films having a thickness of less than about 1 mm.

FIG. **29** a perspective view of an optical lens system in accord with another alternative embodiment of the present invention. The optical lens system in FIG. **29** is shown as containing an optical lens **2900** having an outer perimeter **2910**, a lens surface **2920**, a power source **2930**, a battery bus **2940**, a transparent conductor bus **2950**, a controller **2960**, a light emitting diode **2970**, a radiation or light detector **2980**, and an electro-active refractive matrix or region **2990**. In this embodiment, the electro-active refractive matrix **2990** is contained in a cavity or recess **2999** of the optical lens **2900**.

As can be seen, this optical lens system is self-contained and may be placed in a wide variety of supports including eyeglass frames and phoroptors. In use, the electro-active refractive matrix **2990** of the lens **2900** may be focused and controlled by the controller **2960** to improve the vision of a user. This controller **2960** may receive power from the power source **2930** via the transparent conductor bus **2950** and may receive data signals via the transparent conductor bus **2950** from the radiation detector **2980**. The controller **2950** may control these components as well others via these buses.

When functioning properly, the electro-active refractive matrix **2990** may refract light passing through it so that a wearer of the lens **2900** may be able to see focused images through the electro-active refractive matrix **2990**. Because the optical lens system of FIG. **29** is self-contained, the optical lens **2900** may be placed into various frames and other supports, even though these frames and other supports may not contain specific supporting components for the lens system.

As noted, the light emitting diode **2970**, radiation detector **2980**, controller **2960**, and power source **2930** are each coupled to one another, and to the electro-active refractive matrix **2990** via various conductor buses. As can be seen, the power source **2930** is directly coupled to the controller **2960** through a transparent conductor bus **2950**. This transparent conductor bus is primarily used to transport power to the controller, which may then be selectively fed to both the light emitting diode **2970**, the radiation detector **2980**, and the retroactive refractive matrix **2990** as necessary. While the transparent conductor bus **2950** in this embodiment is preferably transparent, it may also be translucent or opaque in alternative embodiments.

In order to assist in focusing the electro-active refractive matrix **2990**, a light emitting diode **2970** and radiation detector **2980** may work in conjunction with one another as a range finder to help focus the electro-active refractive matrix **2990**. For instance, visible and invisible light may be emitted from the light emitting diode **2970**. The reflection of this emitted light may then be detected by the radiation detector **2980** and may generate a signal identifying that it has sensed the reflected light beam. Upon receiving this signal, the controller **2960**, controlling both of these activities, may determine the distance for a specific object. Aware of this distance, the controller **2960**, previously programmed with the proper optical compensation of the user, may then generate signals that activate the electro-active refractive matrix **2990** to allow a user looking through the optical lens **2900** to view the object or image more clearly.

In this embodiment the electro-active refractive matrix **2990** is shown as a circle with a 35 mm diameter, and the optical lens **2900** is also shown as a circle, this time with a 70 mm diameter and a center lens thickness of approximately 2 mm. In alternative embodiments, however, the optical lens **2900** and the electro-active refractive matrix **2990** may also be configured in other standard and non-standard shapes and sizes. In each of these alternative sizes and orientations it is nevertheless preferable that the position and size of the electro-active refractive matrix **2990** be such that a user of the system can readily view images and objects through the electro-active refractive matrix **2990** portion of the lens.

The other components in the optical lens **2900** may be positioned in other locations of the optical lens **2900**. It is preferable, however, that any location chosen for these individual components be as unobtrusive to the user as possible. In other words, it is preferred that these other components be located away from the main viewing path of the user. Moreover, it is also preferred that these components be as small and transparent as possible to further reduce the risk of obstruction to a user's line of sight.

In a preferred embodiment, the surface of the electro-active refractive matrix **2990** may be flush or substantially flush with the surface of the optical lens **2920**. Moreover, the

buses may be positioned in the lens along a radius of the lens projecting out from a center point. By positioning the buses in this fashion, the lenses may be rotated in their supports to align the buses in their least obtrusive orientation. However, as can be seen in FIG. **29**, this preferred bus design need not always be followed. In FIG. **29**, rather than having all of the components along a single bus positioned along a radius of the lens **2900**, the radiation detector **2980** and the light emitting diode **2970** have been positioned on non-radial buses **2950**. Nevertheless, it is preferred to set as many, if not all, of the various components, along a radius of the lens to minimize their obstructiveness. Moreover, it is also preferred that the bus or other conductive material be accessible from the outer periphery of the lens so that the individual components of the lens may be accessed, controlled or programmed as necessary from the edge of the lens even if the lens has been etched or edged to fit a particular frame. This accessibility may include a direct exposure to the outside of the lens as well as being positioned near the surface of the perimeter and then reachable via a penetration into the lens.

FIG. **30** is a perspective view of a lens system in accord with another alternative embodiment of the present invention. Like, the embodiment of FIG. **29**, this embodiment also shows a lens system that may be used to correct or improve the refractive error of a user. The lens system of FIG. **30** includes a frame **3010**, a transparent conductor bus **3050**, a light emitting diode/range finder **3070**, a nose pad **3080**, a power source **3030**, a translucent controller **3060**, an electro-active refractive matrix **3090**, and an optical lens **3000**. As can be seen in FIG. **30**, the controller **3060** is positioned along the transparent conductor bus **3050** between the electro-active refractive matrix **3090** and the power source **3030**. As can also be seen the range finder **3070** is coupled to the controller **3060** along a different conductor bus.

In this embodiment the optical lens **3000** is mounted and supported by the frame **3010**. Furthermore, rather than having the power source **3030** mounted on or in the optical lens **3000**, the power source **3030** is mounted on the nose pad **3080**, which is in turn connected to the controller **3060** through the nose pad connector **3020**. An advantage of this configuration is that the power source **3030** may be readily replaced or recharged as required.

FIG. **31** is a perspective view of an alternative lens system in accord with another embodiment of the present invention. In FIG. **31** the controller **3160**, strap **3170**, frame **3110**, conductive bus **3150**, electro-active refractive matrix **3190**, optical lens **3100**, frame stem or hollow lumen **3130**, and signal conductors **3180** are labeled. Rather than mounting the controller **310** on or within the optical lens **3100**, as shown in earlier embodiments, the controller **3160** has been mounted onto strap **3170**. This controller **3160** is coupled to the electro-active refractive matrix **3190** through signal conductors **310** that are positioned within the hollow lumen frame stem **3130** of the frame **3110** and travel to the controller **3160** via the strap **3170**. By placing the controller **3160** on a strap **3170**, a user's prescription can be carried with them from lens system to lens system by simply uncoupling the strap **3170** and placing it onto an alternative frame to be worn by the user.

FIG. **32** is a perspective view of a lens system in accord with another alternative embodiment of the present invention. The frame **3210**, as well as the electro-active refractive matrix **3290**, the optical lens **3200**, and the internal frame signal conductors **3280**, can all be seen in FIG. **32**. In this embodiment, the frame **3210** contains internal frames signal conductors **3280** that may be accessed from any point along their length such that information and power may be readily provided to the components of the optical lens **3200** regardless of its orientation in the frame **3210**. In other words, regardless of the position of the radial bus of the optical lens **3200**, the radial bus may be able to contact the internal frame signal conductors **3280** and provide both power and information to control the electro-active refractive matrices **3290**. Section A—A of FIG. **32** clearly shows these internal frame signal conductors **3280**. In an another alternative embodiment, rather than having two internal frame signal conductors **3280**, only one may be provided within the frame leaving the frame itself to be used as a conductor to facilitate the transport of power and other information to the components. Still further, more than two internal frame conductors may also be used in an alternative embodiment of the present invention.

Moreover, in another alternative embodiment, rather than having a single radial bus connecting the refractive matrix to the frame signal conductors a conductive layer may, instead, be used. In this alternative embodiment, this conductive layer may cover all of the lens or only a portion of the lens. In a preferred embodiment it will be transparent and cover the entire lens to minimize distortion associated with a boundary of the layer. When this layer is used, the number of access points along the exterior perimeter of the lens may be increased by extending the layer to the outer periphery in more than one location. Moreover, this layer may also be compartmentalized into individual sub-regions to provide a plurality of pathways between the edge of the lens and the components within it.

FIG. **33** is a perspective exploded view of an optical lens system in accord with another alternative embodiment of the present invention. In FIG. **33**, an optical lens **3330** can be seen with an electro-active refractive matrix **3390** and an optical toroid **3320**. In this embodiment the refractive matrix **3390** has been positioned within the optical toroid **3320** and then secured to the back of the optical lens **3330**. In so doing, the optical toroid **3320** forms a recess of cavity in the back of the optical lens **3330** to support, hold and contain the electro-active refractive matrix **3390**. Once this optical lens system has been assembled, the front of the optical lens **3330** may then be molded, surface cast, laminated or treated to further configure the optical lens system to a user's specific refractive and optical needs. Consistent with the above embodiments, the electro-active refractive matrix **3390** may then be activated and controlled to improve the vision of a user.

FIG. **34** is another exploded view of an alternative embodiment of the present invention. In FIG. **34** an optical lens **3400**, an electro-active refractive matrix **340** and a carrier **3480** can all be seen. Rather than using the toroid as in the previous embodiment to help orient the electro-active refractive on the optical lens, the electro-active refractive matrix **3490** in this embodiment is coupled to the optical lens **3400** via the carrier **3480**. Likewise, the other components **3470** needed to support the electro-active refractive matrix **3490** may also coupled to the carrier **3480**. In so doing, these components **3470** and the electro-active refractive matrix **3490** may be readily secured to various optical lenses. Furthermore, this carrier **3480**, its components **3470**, and the electro-active refractive matrix **3490** may each be covered with another material or substance to protect them from damage either before or after they are coupled to the lens.

The carrier **3480** may be made with a number of possible materials including a membrane of polymer mesh, a pliable plastic, a ceramic, a glass, and a composite of any of these materials. Consequently, this carrier **3480** may be flexible

and rigid depending upon its material composition. In each case, it is preferred that the carrier **3480** be transparent, although it may be tinted or translucent in alternative embodiments and may provide other desired properties to the lens **3400** as well. Depending upon the type of material that the carrier **3480** is comprised of, various manufacturing processes may be employed including micro-machining and wet and dry etching of the lens to form the recess or cavity in which the carrier may be mounted. These techniques may also be used to manufacture the carrier itself including etching one or both sides of the carrier to create a diffractive pattern to correct for any optical aberrations created by the carrier.

FIGS. **35***a*–**35***e* show an assembly sequence that may be employed in accord with an alternative embodiment of the present invention. In FIG. **35***a,* the frame **3500** and the eye **3570** of a wearer can be clearly seen. In FIG. **35***b,* the electro-active refractive matrix **3580** of optical lens **3505**, the radial bus **3540** and various rotation and position arrows **3510**, **3520**, and **3530** can also be seen. FIG. **35***c* shows the optical lens system with its radial bus **3540** at the 9 o'clock position. FIG. **35***d* shows the same optical lens system of FIG. **35***c* after it has been edged and a portion of the outer perimeter or region has been removed in preparation for mounting into the frame **3500**. FIG. **35***e* shows a completed lens system having the electro-active refractive matrix centered over the eye of the user in a first region and the radial bus **3540** and power source **3590** being positioned between the eye of the user and the temple of the frame **3500** in the perimeter region of the lens. The combined perimeter region and first region comprise the entire lens blank in this embodiment. However, in other embodiments, they may only comprise a portion of the total lens blank.

A technician assembling this lens system in accord with one embodiment of the present invention may proceed as follows. In a first step depicted in FIG. **35***a,* the frame **3500** to be fitted with the electro-active lens may be placed in front of a user to locate the center of a user's eye **3570** with respect to the frame. After locating the center of the user's eye with respect to the frame, the electro-active lens may then be rotated, positioned, edged, and cut such that the center of the electro-active refractive matrix **3580** is centered over the user's eye **3570** when the user wears the frame. This rotation and cutting is shown in FIGS. **35***b,* **35***c* and **35***d.* After the lens has been edged and cut to properly position the electro-active matrix **3580** over the user's eye, the power source or other components may then be snapped onto the bus **3540** of the lens and the lens may be secured into the frame as shown in FIG. **35***e.* This snapping process may include pushing leads from each of the components through the surface of the lens and into the bus to secure the component to the lens as well as to provide for their connection to each other and to the other components.

While, the electro-active lens system and the electro-active matrix are described as being centered in front of or over a user's eye, both the lens and the electro-active matrix may also be placed in other orientations in the user's field of vision including being off-set from center of the user's eye. Moreover, due to the innumerable shapes and sizes of available eyewear frames, because the lens may be edged, thereby allowing its dimensions to be changed, the lens may be ultimately assembled by a technician to fit a wide variety of frames and individual users.

In addition to simply using the electro-active refractive matrix to correct a user's vision, one or both surfaces of the lens may also be surface-cast or ground to further compensate for the user's refractive error. Likewise, the lens surface may also be laminated to compensate for the user's optical aberrations.

In this embodiment as well as in others, the technician may use standard lens blanks to assemble the system. These lens blanks may range from 30 mm–80 mm with the most common sizes being 60 mm, 65 mm, 70 mm, 72 mm, and 75 mm. These lens blanks may be coupled with an electro-active matrix mounted on a carrier before or sometime during the assembly process.

FIGS. **36***a*–**36***e* illustrate an alternative embodiment of the present invention depicting another assembly sequence wherein, rather than having the range finder and power source positioned on the lens, these components are actually coupled to the frame itself. Illustrated in FIGS. **36***a*–**36***e* are a frame **3600**, a user's eye **3670**, orientation and rotation arrows **3610**, **3620** and **3630**, electro-active refractive matrix **3680** of optical lens **3605** and a transparent component bus **3640**. As in the above embodiment, the user's eye may first be positioned within the frame. The lens may then be rotated with respect to the user's eye such that the electro-active refractive matrix **3680** is properly positioned in front of the user's eye. The lens may then be shaped and ground as necessary and inserted into the frame. Concurrent with this insertion the range finder, battery and other components **3690** may also be coupled to the lens.

FIGS. **37***a*–**37***f* provide yet another alternative embodiment of the present invention. The transparent bus **3740**, electro-active refractive matrix **3780**, user's eye **3770**, rotation arrows **3710**, range finder or controller and power source **3730** and multi-conductor wire **3720** are depicted throughout these figures. In this alternative embodiment, in addition to completing the steps described in the other two assembly embodiments, another step depicted in FIG. **37***e* may be completed. This step, depicted in FIG. **37***e,* entails wrapping the outer circumference of the lens with a multi-conductor washer or wire system **3720**. This wire system **3720** may be used to transport signals and power to and from the electro-active refractive matrix **3780** as well as the other components. The actual signal wires in the multi-conductor washer **3720** may include ITO [indium tin oxide] materials as well as gold, silver, copper or any other suitable conductor.

FIG. **38** is an exploded isometric view of an integrated controller and range finder that may be employed in the present invention. Rather than having the controller and the range finder connected to each other via a bus as shown in other embodiments, in this embodiment the range finder, which consists of a radiation detector **3810** and an infrared light emitting diode **3820**, is directly coupled to the controller **3830**. This entire unit may then be coupled to the frame or the lens as described in the above embodiments. While the dimensions of 1.5 mm and 5 mm are shown in FIG. **38**, other dimensions and configurations may also be employed.

FIG. **39** is an exploded perspective view of an integrated controller and power source in accordance with yet another alternative embodiment of the present invention. In this embodiment the controller **3930** is directly coupled to the power source **3940**.

FIG. **40** is an exploded perspective view of an integrated power source **4040**, controller **4030** and range finder in accordance with another alternative embodiment of the present invention. As can be seen in FIG. **40**, the radiation detector **4010** and light emitting diode **4020** (the range-finder) are coupled to the controller **4030**, which is in turn coupled to the power source **4040**. As with the above embodiments, the dimensions shown in this case (3.5 mm and 6.5 mm), are exemplary and alternative dimensions may also be employed.

FIGS. **41**–**43** are each perspective views of a lens system in accord with various alternative embodiments of the

present invention. FIG. **41** is a lens system that employs a controller and range finder combination **4130** that is in turn coupled to the electro-active refractive matrix **4140** and the power source **4110** through power conductor buses **4120**. Comparatively, FIG. **42** shows a combined controller and power source **4240** that is coupled to a light emitting diode **4220** and radiation detector **4210** (range finder) and the electro-active refractive matrix **4230** through transparent conductor buses **4250**. FIG. **43** illustrates the positioning of the combined power source, controller and range finder **4320**, positioned along the radial transparent conductor bus **4330**, which is in turn coupled to the electro-active refractive region **4310**. In each of these three figures various dimensions and diameters are shown. It should be understood that these dimensions and diameters are merely illustrative and that various other dimensions and diameters may be employed.

It should also be appreciated that various embodiments of the invention have a wide variety of uses in the field of photonics and telecommunications. For example, the electro-active systems described herein may be utilized to steer and/or focus a beam of light, or laser light, that may have uses in optical communications and optical computing, such as optical switching and data storage. Additionally, the electro-active systems described herein may be utilized by complex imaging systems to locate an optical image in three-dimensional space.

FIG. **48** is a perspective view of an electro-active optical system in accord with one embodiment of the invention. As shown in FIG. **48**, electro-active optical system **4800** includes a first electro-active element **4820**, a second electro-active element **4830**, a third electro-active element **4840**, and range finder device **4850**. Also shown in FIG. **48**, an image **4810** is represented by an arrow at a first point in three-dimensional space. The image may be, for example, a beam of light, a laser beam, or a real or virtual optical image. Accordingly, the electro-active optical system **4800** may be utilized to focus the image **4810** to a predetermined point in three dimensional space. The first electro-active element **4820** may be used to move, or shift, the image **4810** along the x-axis. This may be accomplished by applying the appropriate array of signals to the first electro-active element **4820** to produce horizontal prism in the first electro-active element **4820**. The second electro-active element **4830** may be used, in a similar manner as the first electro-active element **4820**, to produce vertical prism and shift the image **4810** along the y-axis. The third electro-active element **4840** may be used to focus the image **4810** along the z-axis by adjusting the optical power of the system **4800** to a more positive or more negative optical power, depending on the desired location of the resulting image. Additionally, range finder device **4850** may be utilized to detect the location of a target, for example, a detector, in the image field where the user desires to focus the resulting image. Range finder device **4850** may then determine the degree of focus required in the third electro-active element **4840** to achieve the resulting image **4860** desired by the user at the predetermined point in three-dimensional space. It should be appreciated that range finder device **4850** may be in the form of the above-described range finder embodiments, including an integrated power source, controller and range finder system.

FIG. **49** is a perspective view of an electro-active optical system in accord with one embodiment of the invention. As shown in FIG. **49**, electro-active optical system **4900** includes a first electro-active element **4920**, a second electro-active element **4930**, and range finder device **4950**. Also shown in FIG. **49**, an image **4910** is represented by an arrow at a first point in three-dimensional space. The image may be, for example, a beam of light, a laser beam, or a real or virtual optical image. Accordingly, the electro-active optical system **4900** may be utilized to focus the image **4910** to a predetermined point in three dimensional space. The first electro-active element **4920** may be used to move, or shift, the image **4910** along both the x-axis and the y-axis. This may be accomplished by applying the appropriate array of signals to the first electro-active element **4920** to produce horizontal and vertical prism in the first electro-active element **4920**. In this embodiment, the prism may be produced with both a horizontal and a vertical component, as opposed to solely horizontal or solely vertical. The second electro-active element **4930** may be used to focus the image **4910** along the z-axis by adjusting the optical power of the system **4900** to a more positive or more negative optical power, depending on the desired location of the resulting image. Additionally, range finder device **4950** may be utilized to detect the location of a target, for example, a detector, in the image field where the user desires to focus the resulting image. Range finder device **4950** may then determine the degree of focus required in the second electro-active element **4930** to achieve the resulting image **4960** desired by the user at the predetermined point in three-dimensional space. It should be appreciated that range finder device **4950** may be in the form of the above-described range finder embodiments, including an integrated power source, controller and range finder system.

FIG. **50** is a perspective view of an electro-active optical system in accord with one embodiment of the invention. As shown in FIG. **50**, electro-active optical system **5000** includes a first electro-active element **5020** and range finder device **5050**. Also shown in FIG. **50**, an image **5010** is represented by an arrow at a first point in three-dimensional space. The image may be, for example, a beam of light, a laser beam, or a real or virtual optical image. Accordingly, the electro-active optical system **5000** may be utilized to focus the image **5010** to a predetermined point in three dimensional space. The first electro-active element **5020** may be used to move, or shift, the image **5010** along both the x-axis and the y-axis. This may be accomplished by applying the appropriate array of signals to the first electro-active element **5020** to produce horizontal and vertical prism in the first electro-active element **5020**. In this embodiment, the prism may be produced with both a horizontal and a vertical component, as opposed to solely horizontal or solely vertical. Additionally, the first electro-active element **5020** may be used to focus the image **5010** along the z-axis by adjusting the optical power of the system **5000** to a more positive or more negative optical power, depending on the desired location of the resulting image. Range finder device **5050** may be utilized to detect the location of a target, for example, a detector, in the image field where the user desires to focus the resulting image. Range finder device **5050** may then determine the degree of focus required in the first electro-active element **5020** to achieve the resulting image **5060** desired by the user at the predetermined point in three-dimensional space. Accordingly, the optical system **5000** would produce an array with optical properties the same as an optical lens with prism at a fixed angle and possessing a desired spherical power. It should be appreciated that range finder device **5050** may be in the form of the above-described range finder embodiments, including an integrated power source, controller and range finder system.

FIG. **51** is a perspective view of an electro-active optical system in accord with one embodiment of the invention. As

shown in FIG. **51**, electro-active optical system **5100** includes a first element **5120**, a second electro-active element **5130**, and range finder device **5150**. Also shown in FIG. **51**, an image **5110** is represented by an arrow at a first point in three-dimensional space. The image may be, for example, a beam of light, a laser beam, or a real or virtual optical image. Accordingly, the electro-active optical system **5100** may be utilized to focus the image **5110** to a predetermined point in three dimensional space. The first element **5120** may be used to select a specific wavelength of light from the image or beam **5110**. This may be accomplished using a static monochromatic filter, or a mechanically or electrically switching chromatic filter. The second electro-active element **5130** may be used to move, or shift, the image **5110** along both the x-axis and the y-axis. This may be accomplished by applying the appropriate array of signals to the second electro-active element **5130** to produce horizontal and vertical prism in the second electro-active element **5130**. In this embodiment, the prism may be produced with both a horizontal and a vertical component, as opposed to solely horizontal or solely vertical. The second electro-active element **5130** may also be used to focus the image **5110** along the z-axis by adjusting the optical power of the system **5100** to a more positive or more negative optical power, depending on the desired location of the resulting image. Additionally, range finder device **5150** may be utilized to detect the location of a target, for example, a detector, in the image field where the user desires to focus the resulting image. Range finder device **5150** may then determine the degree of focus required in the second electro-active element **5130** to achieve the resulting image **5160** desired by the user at the predetermined point in three-dimensional space. Accordingly, the optical system **5100** would produce an array with optical properties the same as an optical lens with prism at a fixed angle and possessing a desired spherical power. It should be appreciated that range finder device **5150** may be in the form of the above-described range finder embodiments, including an integrated power source, controller and range finder system.

FIG. **52** is a perspective view of an electro-active optical system in accord with one embodiment of the invention. As shown in FIG. **52**, electro-active optical system **5200** includes a first element **5220**, a second electro-active element **5230**, and range finder device **5250**. Also shown in FIG. **52**, an image **5210** is represented by an arrow at a first point in three-dimensional space. The image may be, for example, a beam of light, a laser beam, or a real or virtual optical image. Accordingly, the electro-active optical system **5200** may be utilized to focus the image **5210** to a predetermined point in three dimensional space. The first element **5220** may be a fixed lens used to provide a large, or gross, adjustment to position of the resulting image along the z-axis. The second electro-active element **5230** may be used to move, or shift, the image **5210** along both the x-axis and the y-axis. This may be accomplished by applying the appropriate array of signals to the second electro-active element **5230** to produce horizontal and vertical prism in the second electro-active element **5230**. In this embodiment, the prism may be produced with both a horizontal and a vertical component, as opposed to solely horizontal or solely vertical. The second electro-active element **5230** may also be used to focus the image **5210** along the z-axis by adjusting the optical power of the system **5200** to a more positive or more negative optical power, in combination with the first element **5220**, depending on the desired location of the resulting image. Additionally, range finder device **5250** may be utilized to detect the location of a target, for example, a detector, in the image field where the user desires to focus the resulting image. Range finder device **5250** may then determine the degree of focus required in the second electro-active element **5230**, in combination with the first element **5220**, to achieve the resulting image **5260** desired by the user at the predetermined point in three-dimensional space. Accordingly, the optical system **5200** would produce an array with optical properties the same as an optical lens with prism at a fixed angle and possessing a desired spherical power. It should be appreciated that range finder device **5250** may be in the form of the above-described range finder embodiments, including an integrated power source, controller and range finder system. It should be further appreciated that although a fixed lens has only been described above with reference to FIG. **52** for use in adjusting the focal length of the resulting image, a fixed lens may be employed with any of the above-described electro-active optical systems for steering or focusing an optical image in three-dimensional space. For example, the various embodiments described above could be used in any imaging system designed for recording an optical image, such as digital or conventional cameras, video recorders, and other devices for recording an optical image.

While various embodiments of the present invention have been discussed above, other embodiments also within the spirit and scope of the present invention are also plausible. For example, in addition to each of the components described above, an eye tracker may also be added to the lens to track the eye movements of the user both in focusing the electro-active refractive matrix, as well as performing various other functions and services for the user. Furthermore, while a combined LED and radiation detector have been described as a rangefinder other components may also be used to complete this function.

What is claimed is:

1. A multi-focal electro-active spectacle comprising:

an electro-active lens comprising a stack of at least two electro-active regions to produce a plurality of zones with different viewing corrections; and

a controller for independently activating each electro-active region to produce the plurality of zones with different viewing corrections.

2. The multi-focal electro-active spectacle of claim **1**, further comprising a far viewing correction zone produced by a fixed distance optical.

3. The multi-focal electro-active spectacle of claim **1**, wherein one of the plurality of zones for viewing correction is a far-intermediate zone for viewing correction.

4. The multi-focal electro-active spectacle of claim **3**, wherein the viewing correction provided by the far-intermediate zone is about 0.25 diopter to about 2.0 diopter.

5. The multi-focal electro-active spectacle of claim **3**, wherein the viewing correction provided by the far-intermediate zone is about 0.25 diopter to about 0.75 diopter.

6. The multi-focal electro-active spectacle of claim **1**, wherein the stack of at least two electro-active regions produce at least near and near-intermediate zones for viewing correction.

7. The multi-focal electro-active spectacle of claim **1**, wherein the stack of at least two electro-active regions produce at least near, near-intermediate and far-intermediate zones for viewing correction.

8. The multi-focal electro-active spectacle of claim **1**, wherein the lens has a stack of at least three electro-active regions.

9. The multi-focal electro-active spectacle of claim **8**, wherein the at least three electro-active regions produce at

least near, near-intermediate, and far-intermediate zones for viewing correction.

10. The multi-focal electro-active spectacle of claim **9**, wherein the near zone for viewing correction is produced by activating all three electro-active regions.

11. The multi-focal electro-active spectacle of claim **9**, wherein the viewing correction of the far-intermediate zone is additive to viewing correction of the near and near-intermediate zones.

12. The multi-focal electro-active spectacle of claim **8**, wherein the at least three electro-active regions are all of the same area.

13. The multi-focal electro-active spectacle of claim **8**, wherein one of the electro-active regions has a smaller area than the at least two other electro-active regions.

14. The multi-focal electro-active spectacle of claim **13**, wherein the smaller electro-active region is the distal-most electro-active region with respect to a pupil when the lens is worn by a patient.

15. The multi-focal electro-active spectacle of claim **13**, wherein the smaller electro-active region is the proximal-most electro-active region with respect to a pupil when the lens is worn by a patient.

16. The multi-focal electro-active spectacle of claim **13**, wherein the smaller electro-active region is in between at least two other electro-active regions.

17. The multi-focal electro-active spectacle of claim **1**, wherein the plurality of viewing correction zones are centered over a pupil.

18. The multi-focal electro-active spectacle of claim **1**, wherein the plurality of viewing correction zones are vertically de-centered from a pupil.

19. The multi-focal electro-active spectacle of claim **1**, wherein the plurality of viewing correction zones are horizontally de-centered from a pupil.

20. The multi-focal electro-active spectacle of claim **1**, wherein the plurality of viewing correction zones are de-centered from a pupil outside of a near correction zone.

21. The multi-focal electro-active spectacle of claim **1**, wherein the electro-active regions are substantially rectangular.

22. The multi-focal electro-active spectacle of claim **1**, further comprising at least one electro-active blending zone between the plurality of viewing correction zones to provide a transition of optical power between the viewing correction zones.

23. The multi-focal electro-active spectacle of claim **22**, wherein optical power in the blending zone decreases linearly from higher optical power to lower optical power, as the plurality of viewing correction zones transition from higher optical power to lower optical power.

24. The multi-focal electro-active spectacle of claim **22**, wherein optical power in the blending zone decreases exponentially from higher optical power to lower optical power, as the plurality of viewing correction zones transition from higher optical power to lower optical power.

25. The multi-focal electro-active spectacle of claim **22**, wherein optical power in the blending zone decreases by a polynomial function from higher optical power to lower optical power, as the plurality of viewing correction zones transition from higher optical power to lower optical power.

26. An electro-active lens comprising:

two stacked electro-active regions, in which a first region produces a near and near-intermediate viewing correction zone when activated and in which a second region produces a far-intermediate viewing correction zone when activated, only one electro-active region activated at any one time; and

a controller for independently activating each electro-active region to produce the plurality of zones with different viewing corrections.

27. An electro-active lens comprising:

three stacked electro-active regions which produce a near viewing correction zone when three electro-active regions are activated and which produce a near-intermediate viewing correction zone when two electro-active regions are activated and which produce a far-intermediate viewing correction zone when only one electro-active region is activated; and

a controller for independently activating each electro-active region to produce the plurality of zones with different viewing corrections.

28. The electro-active lens of claim **27** wherein the three electro-active regions are all of the same area.

29. The electro-active lens of claim **27** wherein one of the three electro-active regions is smaller in area than the remaining two electro-active regions.

30. The electro-active lens of claim **29** wherein the electro-active region of smaller area provides about 50 percent of the optical power for near viewing correction.

31. The electro-active lens of claim **30** wherein the remaining two electro-active regions each provide about 25 percent of the optical power for near viewing correction.

* * * * *