US006826286B1

(12) **United States Patent**
Arndt et al.

(10) **Patent No.: US 6,826,286 B1**
(45) **Date of Patent: Nov. 30, 2004**

(54) **AUDIO AMPLIFICATION DEVICE WITH VOLUME CONTROL**

(75) Inventors: **Horst Arndt**, Kitchener (CA); **Andre Vonlanthen**, Waterloo (CA)

(73) Assignee: **Unitron Hearing Ltd.**, Kitchener (CA)

(*) Notice: Subject to any disclaimer, the term of this patent is extended or adjusted under 35 U.S.C. 154(b) by 0 days.

(21) Appl. No.: **10/670,260**

(22) Filed: **Sep. 26, 2003**

(51) **Int. Cl.**[7] **H04R 25/00**
(52) **U.S. Cl.** **381/312**; 381/321
(58) **Field of Search** 381/23.1, 312, 381/321, 104, 105, 106, 107, 109

(56) **References Cited**

U.S. PATENT DOCUMENTS

5,903,655 A * 5/1999 Salmi et al. 381/321

6,731,768 B1 * 5/2004 Delage 381/312

* cited by examiner

Primary Examiner—Huyen D. Le
(74) *Attorney, Agent, or Firm*—Bereskin & Parr

(57) **ABSTRACT**

An audio amplification device such as a hearing aid equipped with a user-operable volume control that provides users with the facility to return the volume of the device to a specific level after having been adjusted to a different level by the user. The device includes an electronic module adapted to detect when the volume control reaches a pre-determined volume reserve position from a second volume position, and to emit a reference signal when the volume reserve position is reached. The reference signal may be an audible tone, or another type of distinct signal. The present invention may be adapted for use with binaural hearing aid fittings.

13 Claims, 2 Drawing Sheets

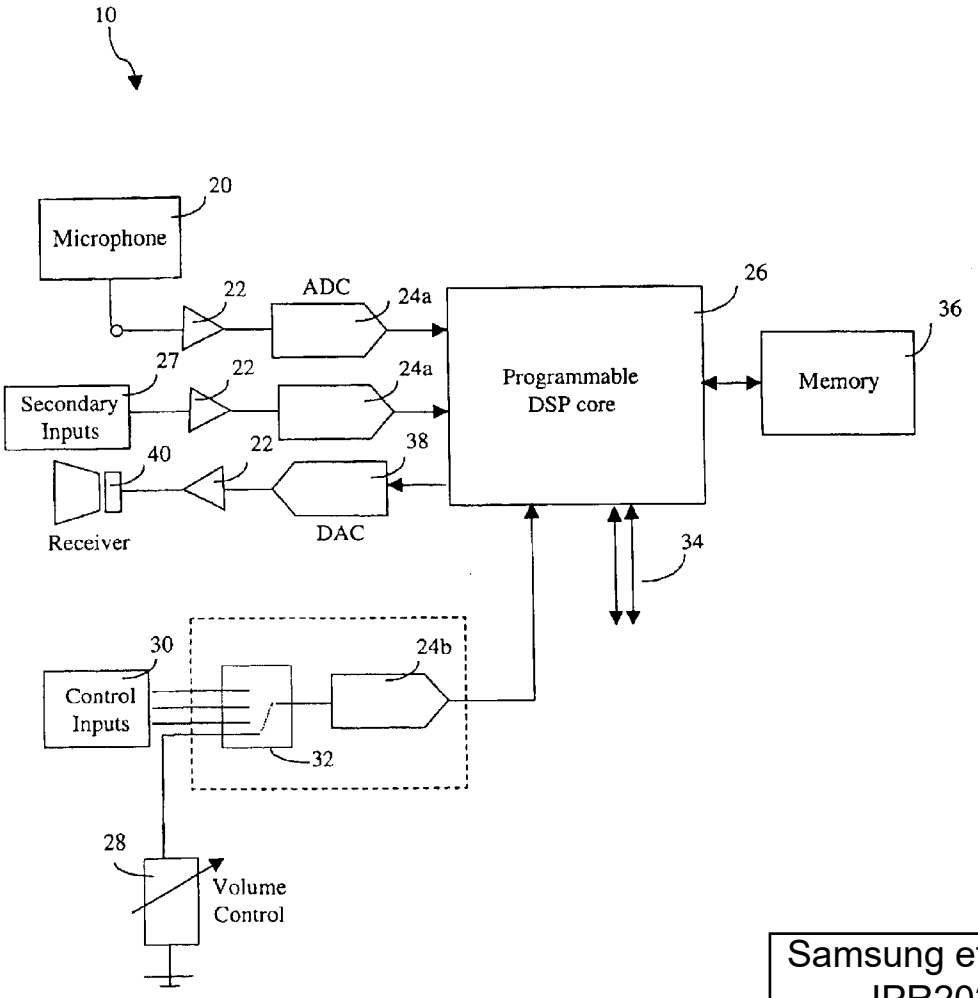

Samsung et al. v. Techiya
IPR2024-01031
Exhibit 1020

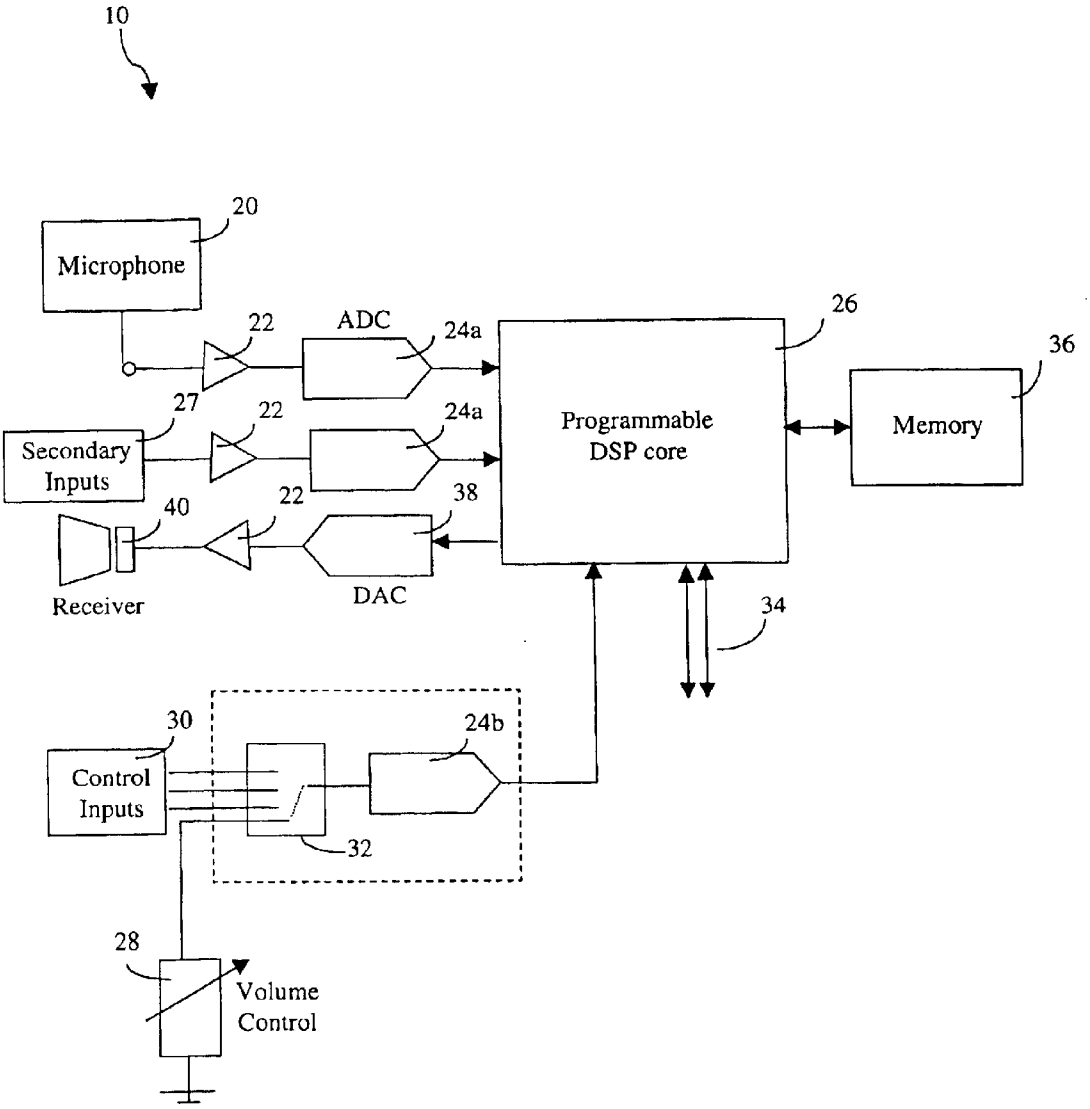
10
20
Microphone
22
ADC
24a
26
36
27
22
24a
Secondary Inputs
Programmable DSP core
Memory
40
22
38
Receiver
DAC
34
30
24b
Control Inputs
32
28
Volume Control

FIG. 1

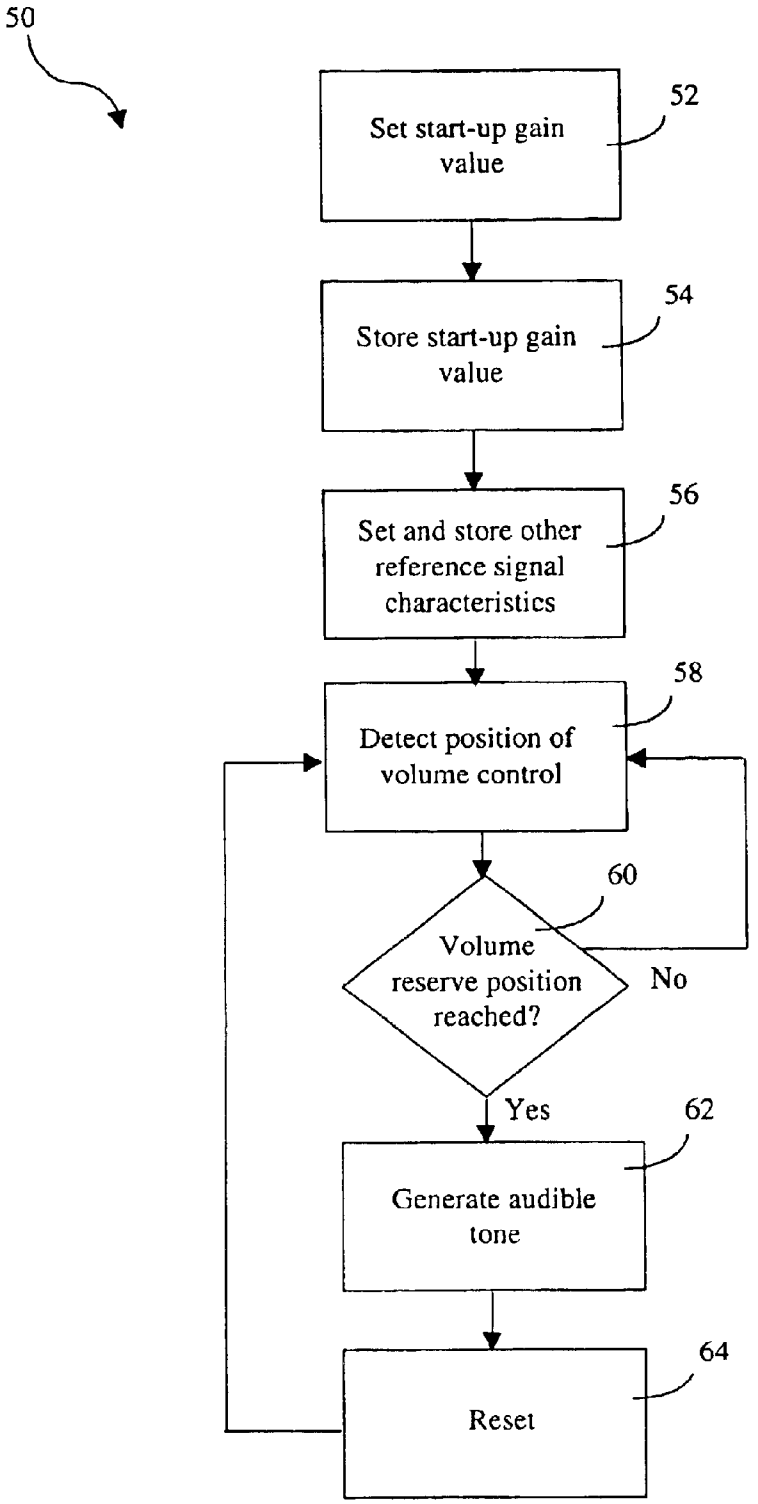
50
Set start-up gain value
52
Store start-up gain value
54
Set and store other reference signal characteristics
56
Detect position of volume control
58
Volume reserve position reached?
60
No
Yes
Generate audible tone
62
Reset
64

FIG. 2

AUDIO AMPLIFICATION DEVICE WITH VOLUME CONTROL

FIELD OF THE INVENTION

The present invention relates generally to communications and audio equipment. More particularly, the invention relates to audio amplification equipment, including hearing aids, equipped with a user-operable volume control.

BACKGROUND OF THE INVENTION

Audio amplification devices, such as hearing aids are typically manufactured with volume controls to provide users with the ability to adjust the sound level (i.e. loudness) of output from the devices. Many users of hearing aids appreciate the flexibility provided by a volume control. For example, the volume control allows users to turn down the hearing aid volume when exposed to loud sounds, or to turn up the hearing aid volume when they want to hear very quiet sounds. Users may also use the volume control to compensate for auditory fatigue, which may occur in the course of a day.

While some modern hearing aids are equipped with compression amplifiers that map quiet sounds to just above the threshold of audibility and loud sounds to just below the loudness discomfort level, many users still prefer to be in control of the overall loudness of the output produced by their hearing aids. A user-operable volume control allows a user to customize the hearing aid volume to hear different sounds at levels that the user may find desirable or perceive as more comfortable.

However, once a user adjusts the hearing aid volume on a hearing aid, it is typically difficult for that user to quickly return the volume to a specific level (e.g. a volume associated with a pre-determined default gain, which has been established for that hearing aid during fitting). This may be particularly problematic when binaural hearing aids are used. Many bilateral hearing losses are corrected with a binaural hearing aid fitting, to ensure that directional hearing and speech discrimination in noise are optimized. To achieve the best results, the loudness of the amplified signal perceived by each ear is made equal. While a fitter of a user's hearing aid may initially select the proper volume settings to achieve this, it is easy for the user to change these settings. As a result, some of the advantages provided by the binaural fitting may be lost.

SUMMARY OF THE INVENTION

The present invention relates to audio amplification equipment, including hearing aids, and is generally directed to a hearing aid equipped with a user-operable volume control that provides users with the facility to return the hearing aid volume to a specific level after having been adjusted to a different level by the user.

In one broad aspect of the present invention, there is provided a digital hearing aid comprising an electronic module, the electronic module comprising: a microphone for receiving an input acoustic signal; an analog-to-digital converter coupled to the microphone for converting the input acoustic signal to an input digital signal; a processing core for processing the input digital signal to produce an output digital signal; a digital-to-analog converter coupled to the processing core for converting the output digital signal to an output acoustic signal; a receiver coupled to the digital-to-analog converter for delivering the output acoustic signal to a user; a battery compartment adapted to receive a battery for powering the digital hearing aid; and a volume control operable by the user within a range of volume positions; wherein the electronic module is adapted to emit a reference signal when the volume control reaches a pre-determined volume reserve position in the range, after the volume control is moved from a second volume position in the range to the pre-determined volume reserve position.

In another broad aspect of the present invention, there is provided a hearing aid comprising an electronic module, the electronic module comprising: at least one microphone; an amplifier coupled to the at least one microphone to amplify sound therefrom; a receiver coupled to the amplifier to deliver sound therefrom to a user; a battery compartment adapted to receive a battery for powering the hearing aid; and a volume control operable by the user within a range of volume positions; wherein the electronic module is adapted to emit a reference signal when the volume control reaches a pre-determined volume reserve position in the range, after the volume control is moved from a second volume position in the range to the pre-determined volume reserve position.

In one embodiment of the present invention, the reference signal is an audible tone that is produced every time the volume reserve position is reached or crossed, as the position of the volume control is changed by the user.

Accordingly, the present invention permits users to return the hearing aid volume to a specific level more easily.

BRIEF DESCRIPTION OF THE DRAWINGS

These and other features of the present invention will be made apparent from the following description of a preferred embodiment of the invention, with reference to the accompanying drawings, in which:

FIG. **1** is a schematic diagram illustrating the components of a hearing aid in an embodiment of the invention; and

FIG. **2** is a flowchart illustrating steps in a method of fitting and operating the hearing aid in accordance with an embodiment of the invention.

DETAILED DESCRIPTION OF THE INVENTION

The present invention is generally directed to user-operated controls on communication and audio devices that adjust such devices to a preferred or prescribed operating condition. This condition may be a preferred loudness setting in a cell phone, a preferred loudness balance in a home entertainment system, etc. Furthermore, the user-operated control may be programmed to default automatically to an electronically controlled start-up value, when the device is initially powered or when it is restarted. The user-operated control setting can be changed away from the default setting for a number of reasons over a period of use. The present invention allows the user to easily return the control to the default setting. More specifically, the present invention is directed to a hearing aid equipped with a user-operable volume control that provides a user with the facility to return the hearing aid volume to a specific level after having been adjusted to a different level by the user.

In one preferred embodiment of the invention, the audio device is a hearing aid. The hearing aid produces an audible tone (although another type of distinct signal may be employed) every time a pre-determined volume reserve position is reached, as the user adjusts the hearing aid volume using the volume control. The volume reserve position is associated with a start-up gain, which may be

specified during fitting of the hearing aid. Accordingly, a user can return the hearing aid volume to a specific level with ease. Regardless of the position of the volume control at any given time, whether when the hearing aid is first turned on or during the day, the user can always find the volume reserve position associated with the specified start-up gain by adjusting the volume control until the tone is heard.

Even in the case of auditory fatigue, the user can consistently adjust the hearing aid to a preferred loudness, by using the audible tone (or other reference signal as may be employed) as a reference point.

Furthermore, since the invention can be implemented on an individual hearing aid, the present invention may be adapted for use with both monaural and binaural hearing aid fittings. The present invention may be particularly advantageous when used in binaural fittings, as it permits users to restore both hearing aids to the proper binaural balance as may be determined and prescribed at the time of fitting.

Referring to FIG. **1**, a schematic diagram illustrating the components of a hearing aid in an embodiment of the invention is shown generally as **10**.

Hearing aid **10** is a digital hearing aid that includes an electronic module, which comprises a number of components that collectively act to receive sounds or secondary input signals (e.g. magnetic signals) and process them so that these signals can be better heard by the user of hearing aid **10**. These components are powered by a battery (i.e. a power source) stored in a battery compartment [not shown] of hearing aid **10**. In the processing of received signals, the signals are often amplified for output to the user.

Hearing aid **10** includes one or more microphones **20** for receiving sound and converting the sound to an analog, input acoustic signal. The input acoustic signal is transmitted through a transceiver **22** to an analog-to-digital converter (ADC) **24***a*, which converts the input acoustic signal to an input digital signal for further processing. The input digital signal is then transmitted to a programmable digital signal processing (DSP) core **26**. Other inputs **28** may also be received by core **26** through a transceiver **22**, and where inputs **28** are analog, through an ADC **24***a*. The secondary inputs **27** may include a telecoil circuit which provides the core with a telecoil input signal. In still other embodiments, the telecoil circuit may replace microphone **20** and serve as a primary signal source.

Hearing aid **10** also includes a variable hearing aid volume control **28**, which is operable by the user within a range of volume positions. A signal associated with the current setting or position of volume control **28** is transmitted to core **26** through a low-speed ADC **24***b*. In one implementation of this embodiment of the invention, ADC **24***b* samples the current position of volume control **28** and compares the instantaneous resistance of volume control **28** to a pre-determined resistance value (stored in hearing aid **10** as described in further detail below). When these values are equal, core **26** is programmed to generate and emit a reference signal (e.g. an audible tone) for a selected time period in accordance with the present invention.

Hearing aid **10** may also provide for other control inputs **30** that can be multiplexed with signals from volume control **28** using multiplexer **32**.

Volume control **28** may be in the form of a rotating or sliding control, for example, which protrudes from the casing of hearing aid **10**. Volume control **28** may also provide volume adjustment either continuously or in discrete steps as the volume control is operated. Preferably, although not necessarily, volume control **28** is equipped with end stops, as volume controls without end stops are not generally preferred by users. Marking indicia on volume control **28** and the casing of hearing aid **10** may be optionally used to visually identify various volume positions, to which the user may adjust volume control **28**. These markings are, unfortunately, not visible to the user when the hearing aid is worn on or in the ear. Alternatively, the volume produced by the hearing aid may be adjusted using a remote control device, when the hearing aid is equipped with such a feature.

All signal processing is accomplished digitally in hearing aid **10** through core **26**. Digital signal processing generally facilitates complex processing which often cannot be implemented in modern analog hearing aids. Sophisticated feedback prevention techniques may be employed, and better resolution in pitch and loudness shaping may be obtained in digital hearing aids, for example. Adjustments to hearing aid **10** may be made digitally by hooking it up to a computer, for example, through external port interfaces **34**.

Hearing aid **10** may be preset to a preferred volume reserve position as required by the user's individual hearing loss before use of hearing aid **10**, as may be determined during a fitting, for example. This preferred volume reserve position is used to ensure that normal speech is mapped into the most comfortable listening range of the user. The volume reserve position is associated with a start-up gain, a default measure of how much hearing aid **10** increases the level of sound in this position. A gain value associated with the volume reserve position (e.g. a resistor or voltage value) is stored in a non-volatile memory **36** of hearing aid **10** by core **26**. This permits core **26** to detect when volume control **28** has been operated to reach the volume reserve position associated with the stored gain value, even as the volume reserve position is crossed. It will be understood by persons skilled in the art that memory **36** may comprise a number of different memory stores for use by core **26**, including volatile and non-volatile memory components.

Core **26** is programmed to generate an audible tone when the volume reserve position associated with the stored gain value is reached, so that even if volume control **28** has been moved from the volume reserve position for any reason, the user is notified when volume control **28** has been returned to the volume reserve position by the sounding of the tone. In this embodiment, the generated tone is added to the digital audio path in producing an output digital signal. The output digital signal is converted to an output acoustic signal by a digital-to-analog converter (DAC) **38**, which is then transmitted through an amplifier **22** to a receiver **40** for delivering the output acoustic signal as sound to the user. The tone is amplified to the correct audible level for the specific user's hearing loss, and is perceived by the user when emitted. The tone is added for a selected time. For example, the tone may be added for 1 second, or for more or less than a second. Once the tone ends, the operation of the hearing aid returns to its previous state so that the user is able to hear ambient sounds.

In variant embodiments, the generated tone (or other reference signal) need not be superimposed on the output digital signal as processed by core **26** based on the input signals such that the stream of sounds being heard by the user remains uninterrupted. Furthermore, it will be understood by persons skilled in the art that the generated tone (or other reference signal) may be produced by a component other than core **26**, including components that receive and/or generate analog signals. Where analog reference signals are produced, these signals may be superimposed over acoustic signals before delivery to a user without undergoing conversion to and from a digital state.

Core **26** may be programmed to generate and emit different types of audible tones, of different frequencies and loudness levels. Alternatively, the type of alerting signal or tone, its loudness and frequency may be automatically adjusted as a function of the instantaneous loudness level in the listening environment, to ensure that the alerting signal is always audible to the user. Core **26** may be programmed to permit users or fitters to select the type of tone, or some other distinct type of audible signal, if desired. Core **26** may also be programmed to allow users or fitters to temporarily or permanently enable or disable the generation of tones or other reference signals. These actions may be controlled by providing appropriate switches as control inputs (e.g. control inputs **30**), for example. Reference signal characteristics including the selected reference signal type, and a frequency and loudness level associated with the selected reference signal, for example, may also be stored by core **26** in memory **36**.

The use of audible signals to indicate when the volume reserve position has been reached allows users of hearing aid **10** to make volume adjustments while wearing hearing aid **10**, and while hearing aid **10** is in operation. The user need not visually examine or rely upon marking indicia on volume control **28** or the casing of hearing aid **10** to return volume control **28** to the pre-determined volume reserve position.

In variant embodiments of the invention, other reference signals other than audible signals may be used to indicate that the volume reserve position has been reached. For example, hearing aid **10** may be equipped with visual indicators, tactile or pressure indicators, or other sensory cues that serve to notify the user when the volume reserve position has been reached.

Hearing aid **10** may be adapted to permit operation of the hearing aid **10** within a volume control range of volume positions (e.g. 10 dB or 30 dB), with the current position being controlled by the user through volume control **28**. However, hearing aid **10** may also be adapted to permit fitters to disable manual volume control by the user, if desired. The volume reserve position is independent of the absolute volume control range, but the amount of loudness change above or below this position will generally be larger for larger volume control ranges. The volume reserve position is situated between the ends of the volume control range, but preferably not at the ends, to give users the flexibility of adjusting the volume both above and below the pre-determined volume reserve position, which may be used as a reference for desired user adjustments.

The volume reserve position may be preset as a default position based on the volume range. For example, if the volume range is 30 dB, the volume reserve position may be chosen to correspond with a 10 dB gain, and if the volume range is 10 dB, the volume reserve position may be chosen to correspond with a 3 dB gain; this may then be represented as position "3" as marked on a typical behind-the-ear (BTE) hearing aids. In this manner, volume control **28** need not be active during fitting.

Alternatively, volume control **28** may be configured in actual operation, while active during fitting. Core **26** is programmed to detect a position of volume control **28** as identified by the fitter (e.g. through control inputs **30**), and to store this position as the volume reserve position.

Core **26** is controlled by software that is programmed to perform the functions as described above in this embodiment of the invention. Core **26** may be further controlled by fitting software, which allows fitters to enable and disable manual volume control, to select a desired volume control range, and to select a gain value with which the volume reserve position is to be associated, for example. The selected gain value is then stored in memory **36** of hearing aid **10**. The software also facilitates selection and setting of various reference signal characteristics including, for example, the type of reference signal, and where the reference signal is an audible signal, the frequency and loudness of the reference signal.

Referring to FIG. **2**, a flowchart illustrating steps in a method of fitting and operating a hearing aid in accordance with an embodiment of the invention is shown generally as **50**.

At step **52**, a fitter sets the start-up gain value to be associated with the volume reserve position in the hearing aid (e.g. hearing aid **10** of FIG. **1**).

At step **54**, this gain value is stored by a processing core (e.g. core **26** of FIG. **1**) in a non-volatile store of a memory (e.g. memory **36** of FIG. **1**) of the hearing aid.

At step **56**, other reference signal characteristics may optionally be set and stored in memory, or default values may be used. Such reference signal characteristics may include the type of reference signal, and in the case of audible signals, the frequency and loudness level of the reference signal, for example.

At step **58**, the position of the volume control (e.g. volume control **28** of hearing aid **10**) is detected.

At step **60**, a determination is made if the volume reserve position, based on the gain value stored at step **54**, has been reached or crossed as a result of the volume control being adjusted to (or past) the volume reserve position from a second volume position by a user. If not, the flow of method steps proceeds back to step **58**, where the position of the volume control continues to be monitored. Otherwise, the flow of method steps proceeds to step **62**.

At step **62**, a reference signal is generated and emitted. In this embodiment, the reference signal is in the form of an audible tone, which is made audible to the user through a receiver (e.g. receiver **40** of FIG. **1**), indicating that the volume reserve position has been reached.

At step **64**, a reset may be performed, before the flow of method steps proceeds back to step **58** to continue monitoring the position of the volume control. In the case of an audible signal, for example, the reset may be used to prevent a continuous tone from being sounded if the volume control is left precisely at the volume reserve position by the user. Once the volume control is adjusted to a second volume position different from the volume reserve position, the tone generating feature is re-activated.

While embodiments of the present invention have been described in an implementation where hearing aid **10** comprises an electronic module controlled by software, it will be understood by persons skilled in the art that other implementations are possible, including systems implemented strictly in hardware, for example.

Furthermore, while embodiments of the present invention have been described with respect to digital hearing aids, it will be understood by persons skilled in the art that the present invention may also be implemented with respect to conventional analog or programmable analog hearing aids. With respect to these other types of hearing aids, an amplifier is typically used to amplify signals received through one or more microphones or telecoil of the hearing aid, rather than a DSP core. In variant embodiments of the invention, electronic components may be used to detect when the

volume control reaches a pre-determined volume reserve position (e.g. associated with a gain value "hard-wired" in a circuit). The components are adapted to emit the reference signal when the volume control reaches the volume reserve position.

The present invention has been described with regard to a number of embodiments. However, it will be understood by persons skilled in the art that other variants and modifications may be made without departing from the scope of the invention as defined in the claims appended hereto.

What is claimed is:

1. An audio amplification device comprising an electronic module, said electronic-module comprising:

(a) a microphone for receiving sound and converting said sound to an input acoustic signal;

(b) an analog-to-digital converter coupled to said microphone for converting said input acoustic signal to an input digital signal;

(c) a processing core for processing said input digital signal to produce an output digital signal;

(d) a digital-to-analog converter coupled to said processing core for converting said output digital signal to an output acoustic signal;

(e) a receiver coupled to said digital-to-analog converter for delivering said output acoustic signal to a user;

(f) a battery compartment adapted to receive a batter for powering said amplification device; and

(g) a volume control operable by said user within a range of volume positions;

wherein said electronic module is adapted to emit a reference signal when said volume control reaches a predetermined volume reserve position in said range, after said volume control is moved from a second volume position in said range to said predetermined volume reserve position.

2. The audio amplification device of claim **1**, wherein the device is a hearing aid.

3. The audio amplification device of claim **1**, wherein said volume control is coupled to said processing core, and wherein said processing core is adapted to detect when said volume control reaches said volume reserve position and to generate said reference signal when said volume reserve position is reached.

4. The audio amplification device of claim **3**, said reference signal being audible to said user through said receiver when emitted.

5. The audio amplification device of claim **4**, wherein said processing core is adapted to produce an output digital signal in which said reference signal has been superimposed thereon.

6. The audio amplification device of claim **4**, wherein said processing core is adapted to amplify said reference signal generated thereby.

7. The audio amplification device of claim **3**, further comprising a memory in which a plurality of reference signal characteristics are stored.

8. The audio amplification device of claim **7**, wherein said reference signal characteristics include a gain value associated with said volume reserve position, and wherein said gain value is used by said processing core to detect when said volume control reaches said volume reserve position.

9. The audio amplification device of claim **8**, wherein said processing core is adapted to store said gain value as specified during fitting of said amplification device.

10. The audio amplification device of claim **7**, wherein said reference signal characteristics further includes a reference signal type.

11. The audio amplification device of claim **10**, said reference signal being audible to said user through said receiver when emitted, and wherein said reference signal characteristics further includes at least one of: a type of audible signal, a frequency associated with said reference signal, and a loudness level associated with said reference signal.

12. A hearing aid comprising an electronic module, said electronic module comprising:

(a) at least one microphone;

(b) an amplifier coupled to said at least one microphone to amplify sound received thereby;

(c) a receiver coupled to said amplifier to deliver sound therefrom to a user;

(d) a battery compartment adapted to receive a battery for powering said hearing aid; and

(e) a volume control operable by said user within a range of volume positions;

wherein said electronic module is adapted to emit a reference signal when said volume control reaches a predetermined volume reserve position in said range, after said volume control is moved from a second volume position in said range to said pre-determined volume reserve position.

13. The hearing aid of claim **11**, said signal being audible to said user through said receiver.

* * * * *