US 20180160211A1

(19) United States
(12) Patent Application Publication
KIRSCH et al.
(10) Pub. No.: US 2018/0160211 A1
(43) Pub. Date: Jun. 7, 2018

(54) **SPORTS HEADPHONE WITH SITUATIONAL AWARENESS**

(71) Applicant: **Harman International Industries, Incorporated**, Stamford, CT (US)

(72) Inventors: **James M. KIRSCH**, Salt Lake City, UT (US); **Jeffrey HUTCHINGS**, Sandy, UT (US)

(21) Appl. No.: **15/575,302**

(22) PCT Filed: **Jun. 26, 2015**

(86) PCT No.: **PCT/US2015/038158**

§ 371 (c)(1),
(2) Date: **Nov. 17, 2017**

Publication Classification

(51) **Int. Cl.**
H04R 1/10 (2006.01)

(52) **U.S. Cl.**
CPC ***H04R 1/1041*** (2013.01); *H04R 5/033* (2013.01); ***H04R 1/1083*** (2013.01)

(57) **ABSTRACT**

One or more embodiments set forth an audio processing system for a personal listening device that includes a set of microphones, a noise reduction module, an audio ducker, and a mixer. The set of microphones is configured to receive a first set of audio signals from an environment. The noise reduction module is configured to detect when a signal of interest is present in the first plurality of audio signals, and, upon detecting a signal of interest, transmit a ducking control signal. The audio ducker is configured to receive the ducking control signal, and receive a second plurality of audio signals via a playback device. The audio ducker is further configured to reduce an amplitude of a second plurality of audio signals relative to the signal of interest based on the ducking control signal. The mixer combines the first plurality of audio signals and second plurality of audio signals.

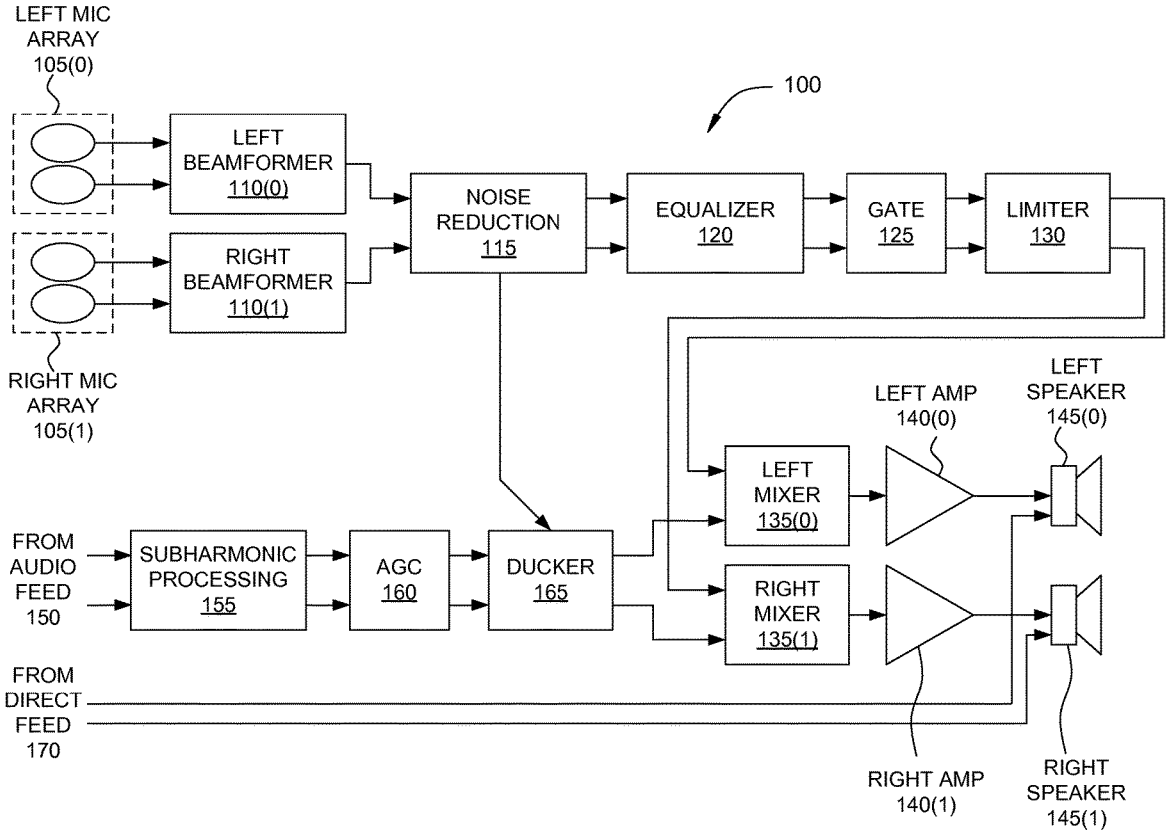

Samsung et al. v. Techiya
IPR2024-01032
Exhibit 1022

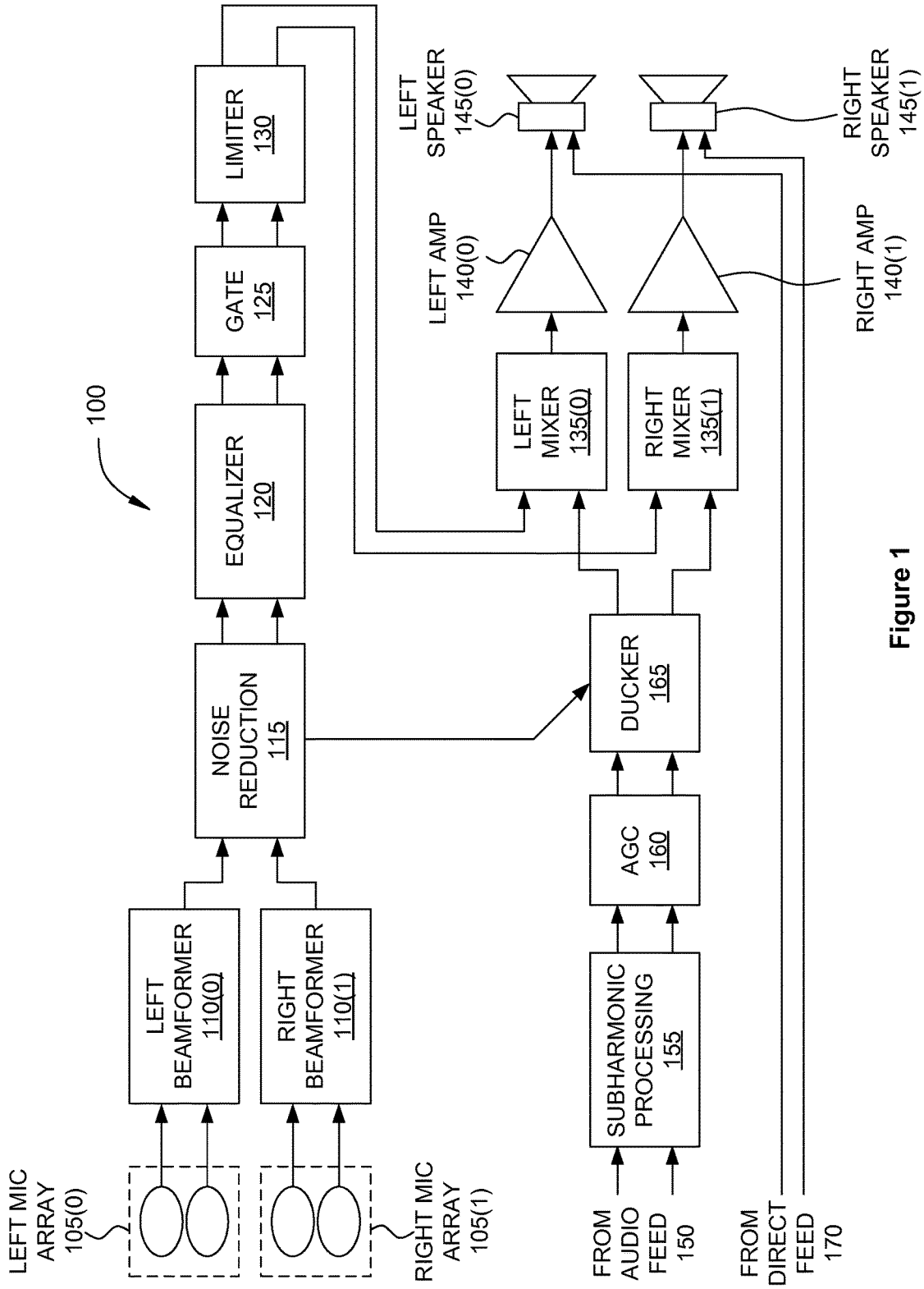
100
LEFT MIC ARRAY 105(0)
RIGHT MIC ARRAY 105(1)
LEFT BEAMFORMER 110(0)
RIGHT BEAMFORMER 110(1)
NOISE REDUCTION 115
EQUALIZER 120
GATE 125
LIMITER 130
FROM AUDIO FEED 150
SUBHARMONIC PROCESSING 155
AGC 160
DUCKER 165
FROM DIRECT FEED 170
LEFT MIXER 135(0)
RIGHT MIXER 135(1)
LEFT AMP 140(0)
RIGHT AMP 140(1)
LEFT SPEAKER 145(0)
RIGHT SPEAKER 145(1)

Figure 1

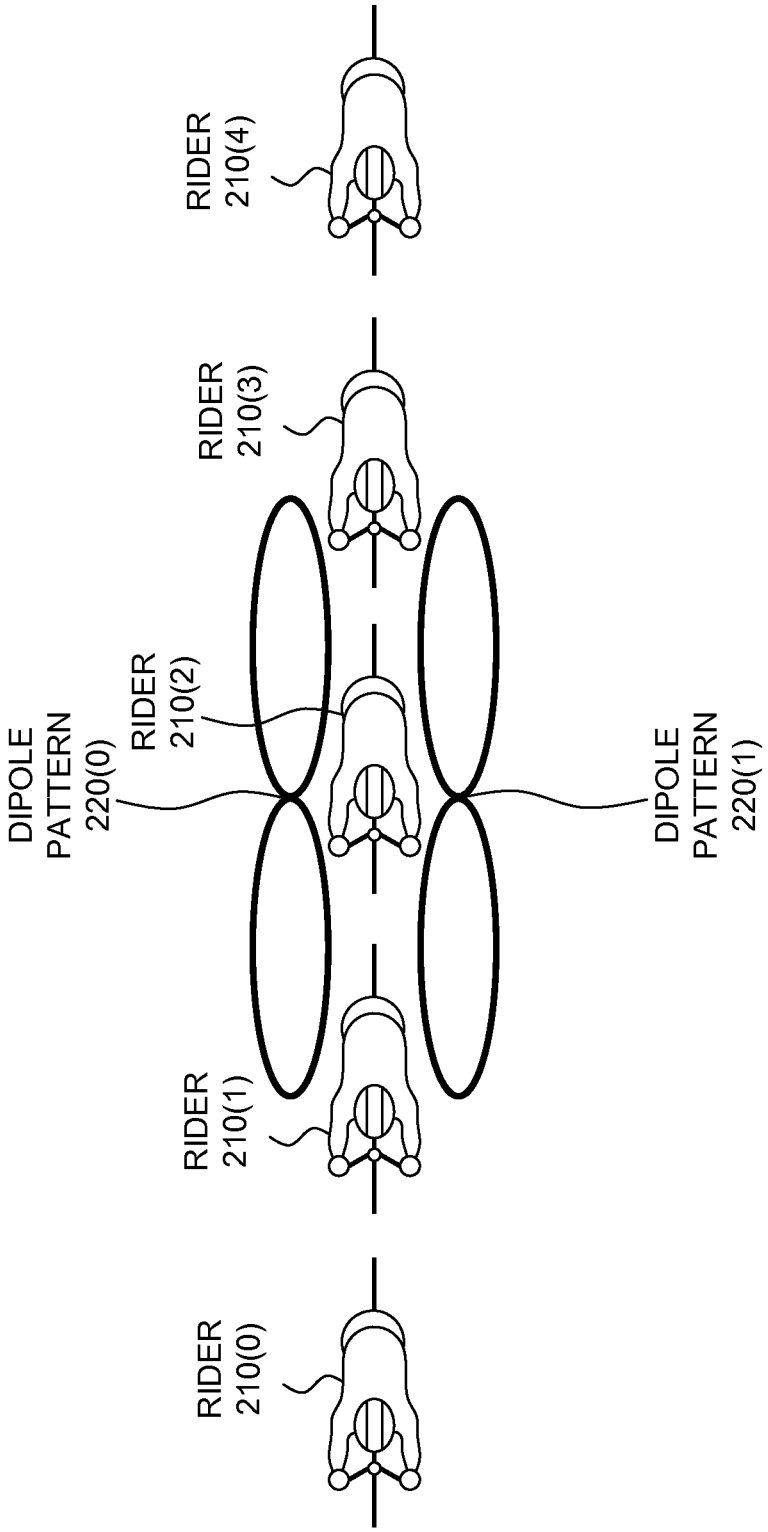
RIDER
210(0)
RIDER
210(1)
DIPOLE
PATTERN
220(0)
RIDER
210(2)
RIDER
210(3)
RIDER
210(4)
DIPOLE
PATTERN
220(1)

Figure 2

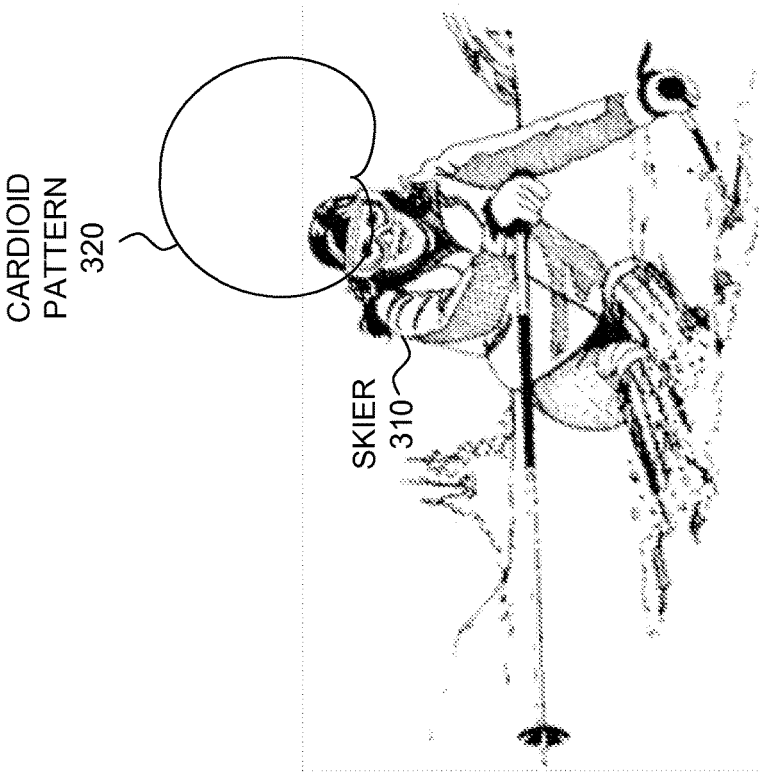

Figure 3

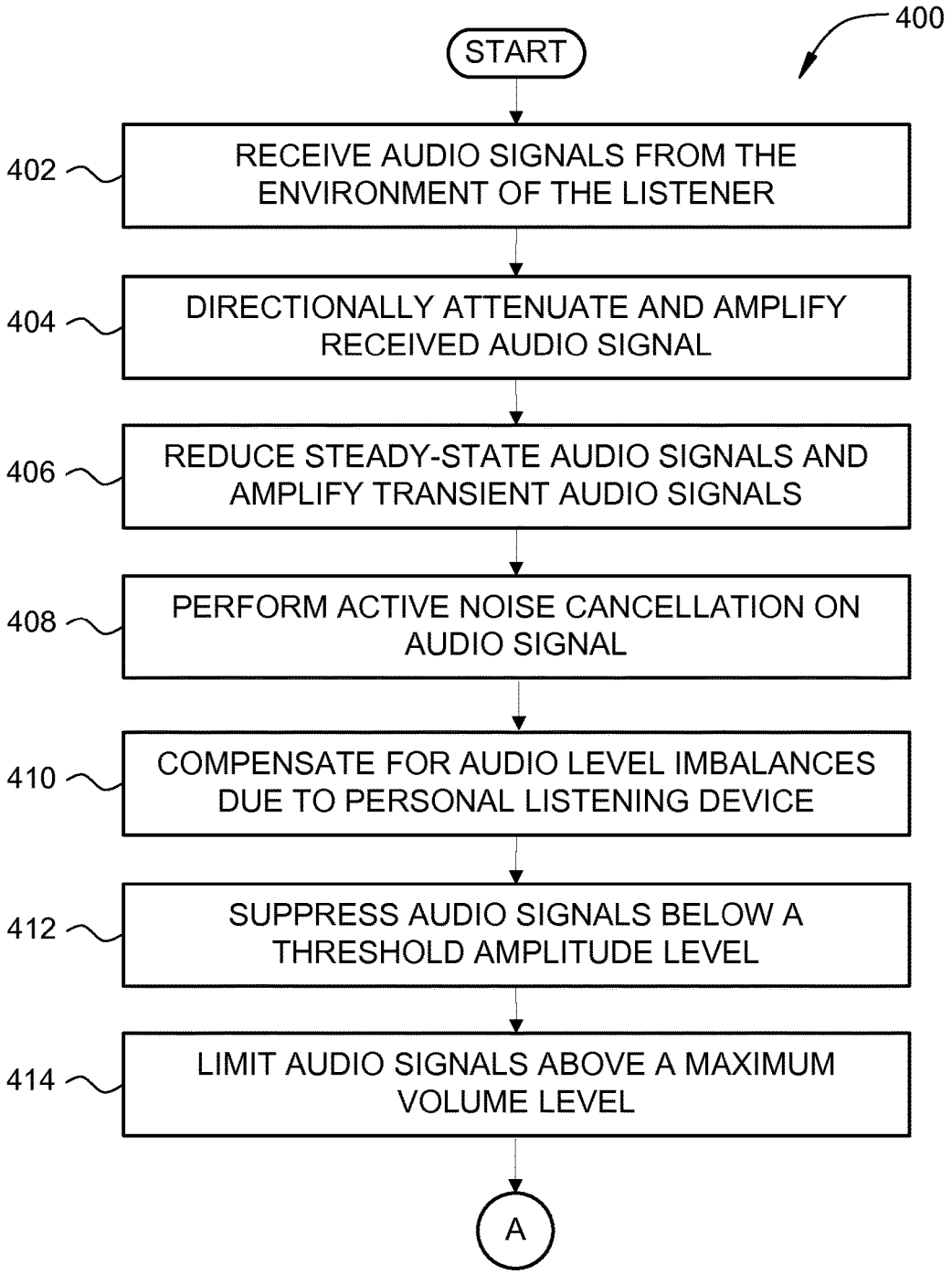
400
START
402
RECEIVE AUDIO SIGNALS FROM THE ENVIRONMENT OF THE LISTENER
404
DIRECTIONALLY ATTENUATE AND AMPLIFY RECEIVED AUDIO SIGNAL
406
REDUCE STEADY-STATE AUDIO SIGNALS AND AMPLIFY TRANSIENT AUDIO SIGNALS
408
PERFORM ACTIVE NOISE CANCELLATION ON AUDIO SIGNAL
410
COMPENSATE FOR AUDIO LEVEL IMBALANCES DUE TO PERSONAL LISTENING DEVICE
412
SUPPRESS AUDIO SIGNALS BELOW A THRESHOLD AMPLITUDE LEVEL
414
LIMIT AUDIO SIGNALS ABOVE A MAXIMUM VOLUME LEVEL
A

Figure 4A

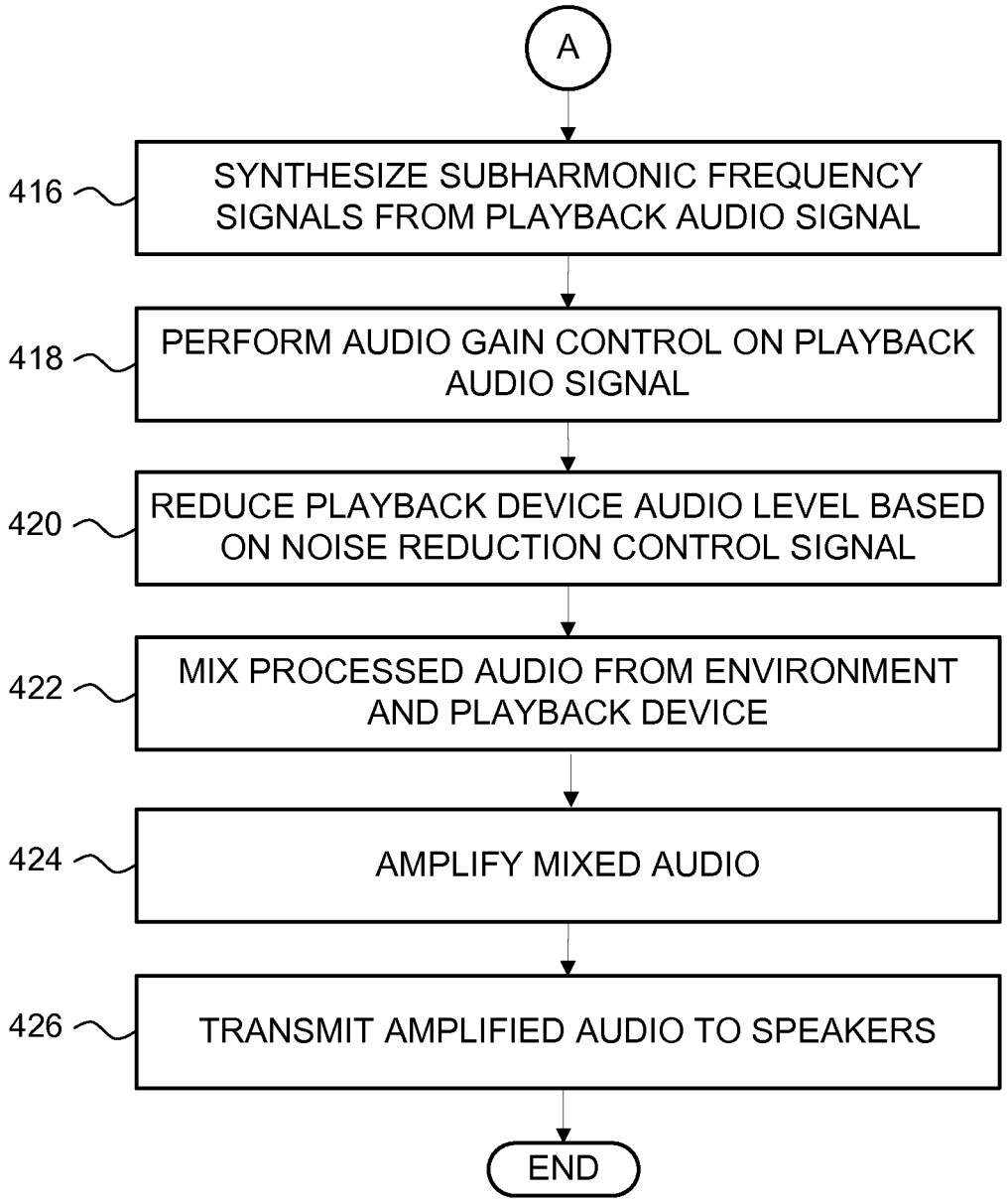
A
416
SYNTHESIZE SUBHARMONIC FREQUENCY SIGNALS FROM PLAYBACK AUDIO SIGNAL
418
PERFORM AUDIO GAIN CONTROL ON PLAYBACK AUDIO SIGNAL
420
REDUCE PLAYBACK DEVICE AUDIO LEVEL BASED ON NOISE REDUCTION CONTROL SIGNAL
422
MIX PROCESSED AUDIO FROM ENVIRONMENT AND PLAYBACK DEVICE
424
AMPLIFY MIXED AUDIO
426
TRANSMIT AMPLIFIED AUDIO TO SPEAKERS
END

Figure 4B

SPORTS HEADPHONE WITH SITUATIONAL AWARENESS

BACKGROUND

Field of the Embodiments of the Present Disclosure

[0001] Embodiments of the present disclosure relate generally to audio signal processing and, more specifically, to a sports headphone with situational awareness.

Description of the Related Art

[0002] Headphones, earphones, earbuds, and other personal listening devices are commonly used by individuals who desire to listen to an audio source, such as music, speech, or movie soundtracks, without disturbing other people in the nearby vicinity. In order to provide good quality audio, such devices typically cover the entire ear or completely seal the ear canal. Typically, these devices include an audio plug for insertion into an audio output of an audio playback device. The audio plug connects to a cable that carries the audio signal from the audio playback device to a pair of headphones or earphones that are placed over or inserted into the listener's ears. As a result, the headphones or earphones provide a good acoustic seal, thereby reducing audio signal leakage and improving the quality of the listener's experience, particularly with respect to bass response.

[0003] One problem with the above devices is that, because the devices form a good acoustic seal with the ear, the ability of the listener to hear environmental sound is substantially reduced. As a result, the listener may be unable to hear certain important sounds from the environment, such as an oncoming vehicle, an announcement over an intercom system, or an alarm. In one example, a bicyclist riding within a paceline could be listening to music but would still like to hear the voices of other bicyclists in the paceline riding to the front and rear. In another example, a diner could be listening to music while waiting for an announcement that the diner's table is ready.

[0004] One solution to the above problems is to acoustically or electronically mix audio from the environment with the audio signal received from the playback device. The listener is then able to hear both the audio from the playback device and the audio from the environment. One drawback with such solutions, though, is that the listener typically hears all audio from the environment rather than just the specific environmental sounds that the listener desires to hear. As a result, the quality of the listener's experience can be substantially reduced.

[0005] As the foregoing illustrates, a more effective technique for providing both playback audio and environmental sound to a personal listening device would be useful.

SUMMARY

[0006] One or more embodiments set forth an audio processing system for a personal listening device that includes a set of microphones, a noise reduction module, an audio ducker, and a mixer. The set of microphones is integrated into the personal listening device and configured to receive a first set of audio signals from an environment. The noise reduction module is coupled to the first plurality of microphones and configured to detect when a signal of interest is present in the first plurality of audio signals, and, upon detecting a signal of interest, transmit a ducking control signal. The audio ducker is coupled to the noise reduction module and configured to receive the ducking control signal, and receive a second plurality of audio signals via a playback device. The audio ducker is further configured to reduce an amplitude of a second plurality of audio signals relative to the signal of interest based on the ducking control signal. The mixer is coupled to the audio ducker and configured to combine the first plurality of audio signals and second plurality of audio signals.

[0007] Other embodiments include, without limitation, a computer readable medium including instructions for performing one or more aspects of the disclosed techniques, as well as a method for performing one or more aspects of the disclosed techniques.

[0008] At least one advantage of the disclosed approach is that a listener who uses the disclosed personal listening device hears a high-quality audio signal from a playback device plus certain audio sounds of interest from the environment, while, at the same time, other sounds from the environment are suppressed relative to the sounds of interest. As a result, the potential for the listener to hear only desired audio signals is improved, leading to a better quality audio experience for the listener.

BRIEF DESCRIPTION OF THE SEVERAL VIEWS OF THE DRAWINGS

[0009] So that the manner in which the recited features of the one more embodiments set forth above can be understood in detail, a more particular description of the one or more embodiments, briefly summarized above, may be had by reference to certain specific embodiments, some of which are illustrated in the appended drawings. It is to be noted, however, that the appended drawings illustrate only typical embodiments and are therefore not to be considered limiting of its scope in any manner, for the scope of the disclosure subsumes other embodiments as well.

[0010] FIG. **1** illustrates an audio processing system configured to implement one or more aspects of the various embodiments;

[0011] FIG. **2** conceptually illustrates one application of the audio processing system of FIG. **1**, according to various embodiments;

[0012] FIG. **3** conceptually illustrates another application of the audio processing system of FIG. **1**, according to various other embodiments; and

[0013] FIGS. **4**A-**4**B is a flow diagram of method steps for processing playback and environmental audio signals, according to various embodiments.

DETAILED DESCRIPTION

[0014] In the following description, numerous specific details are set forth to provide a more thorough understanding of certain specific embodiments. However, it will be apparent to one of skill in the art that other embodiments may be practiced without one or more of these specific details or with additional specific details.

System Overview

[0015] FIG. **1** illustrates an audio processing system **100** configured to implement one or more aspects of the various embodiments. As shown, the audio processing system **100** includes, without limitation, microphone (mic) arrays **105**

(**0**) and **105**(**1**), beamformers **110**(**0**) and **110**(**1**), noise reduction **115**, an equalizer **120**, a gate **125**, a limiter **130**, mixers **135**(**0**) and **135**(**1**), amplifiers (amps) **140**(**0**) and **140**(**1**), speakers **145**(**0**) and **145**(**1**), subharmonic processing **155**, automatic gain control (AGC) **160** and a ducker **165**.

[0016] In various embodiments, audio processing system **100** may be implemented as a state machine, a central processing unit (CPU), digital signal processor (DSP), a microcontroller, an application-specific integrated circuit (ASIC), or any device or structure configured to process data and execute software applications. In some embodiments, one or more of the blocks illustrated in FIG. **1** may be implemented with discrete analog or digital circuitry. In one example, and without limitation, the left amplifier **140**(**0**) and right amplifier **140**(**1**) could be implemented with operational amplifiers.

[0017] Microphone arrays **105**(**0**) and **105**(**1**) receive audio from the physical environment. Microphone array **105**(**0**) receives audio from the physical environment in the vicinity of the left ear of the listener. Correspondingly, microphone array **105**(**1**) receives audio from the physical environment in the vicinity of the right ear of the listener. Each of microphone arrays **105**(**0**) and **105**(**1**) includes multiple microphones. Although illustrated as including two microphones each, microphone arrays **105**(**0**) and **105**(**1**) may include more than two microphones each within the scope of the present disclosure. Because microphone arrays **105**(**0**) and **105**(**1**) include multiple microphones, beamformers **110**(**0**) and **110**(**1**) are able to spatially filter environmental audio in a directional manner, as further described herein. Microphone arrays **105**(**0**) and **105**(**1**) transmit the received audio to beamformers **110**(**0**) and **110**(**1**), respectively.

[0018] Beamformers **110**(**0**) and **110**(**1**) receive audio signals from microphone arrays **105**(**0**) and **105**(**1**), respectively. Beamformers **110**(**0**) and **110**(**1**) process the received audio signals according to one of a number of modes, where the modes include, without limitation, omnidirectional mode, dipole mode, and cardioid mode. In various embodiments, the mode may be preprogrammed by the manufacturer or may be a user-selectable setting.

[0019] Beamformers **110**(**0**) and **110**(**1**) measure the strength of the received audio from each microphone in corresponding microphone arrays **105**(**0**) and **105**(**1**) to determine the direction of the incoming audio. In some embodiments, the signal received from one of the microphones in microphone arrays **105**(**0**) and **105**(**1**) is digitally delayed and then subtracted from the signal from another one of the microphones in the microphone arrays **105**(**0**) and **105**(**1**).

[0020] Depending on the selected mode, beamformers **110**(**0**) and **110**(**1**) amplify signals originating from certain directions while attenuating signals originating from other directions. For example, and without limitation, if the selected mode is omnidirectional mode, then beamformers **110**(**0**) and **110**(**1**) would amplify signals originating from all directions equally. If the selected mode is dipole mode, also referred to herein as "FIG. **8**" mode, then beamformers **110**(**0**) and **110**(**1**) could amplify audio signals originating from two directions, typically from the front and back directions, while suppressing audio signals originating from other directions, typically from the left and the right directions. If the selected mode is cardioid mode, then beamformers **110**(**0**) and **110**(**1**) could amplify audio signals originating from most directions, such as from lateral directions and from above, while suppressing audio signals originating from a particular direction, such as from below the listener. Alternatively, if the selected mode is cardioid mode, then beamformers **110**(**0**) and **110**(**1**) could amplify audio signals originating from in front of the listener, while suppressing audio signals originating from behind the listener. After beamformers **110**(**0**) and **110**(**1**) have amplified and suppressed signals received from respective microphone arrays **105**(**0**) and **105**(**1**) according to the selected mode, beamformers **110**(**0**) and **110**(**1**) transmit the resulting audio signal to noise reduction **115**.

[0021] Noise reduction **115** is a module that receives audio signals from beamformers **110**(**0**) and **110**(**1**). Noise reduction **115** analyzes the received audio signal, suppresses signals determined to be of less interest, such as steady-state or noise signals, and passes signals determined to be signals of interest, such as transient signals. In some embodiments, noise reduction **115** may analyze the received signal in the frequency domain over a period of time. In such embodiments, noise reduction **115** may convert the received signal into the frequency domain and divide the frequency domain into relevant bins, where each bin corresponds to a specific frequency range. Noise reduction **115** may measure the amplitude across multiple samples over time in order to determine which frequency bins correspond to a steady-state signal and which frequency bins correspond to transient signals. In general, steady-state signals may correspond to background noise, including, without limitation, traffic din, hum, hiss, rain, and wind. If a particular frequency bin is associated with an amplitude that remains relatively constant over time, noise reduction **115** may determine that the frequency bin is associated with a steady-state signal. Noise reduction **115** may attenuate such steady-state signals.

[0022] On the other hand, transient signals may correspond to signals of interest, including, without limitation, human speech, honking automobile horns, and sirens. If a particular frequency bin is associated with an amplitude that fluctuates significantly over time, noise reduction **115** may determine that the frequency bin is associated with a transient signal. Noise reduction **115** may pass such transient signals to equalizer **120** and optionally may amplify the transient signals.

[0023] In one example, and without limitation, noise reduction **115** could analyze 256 frequency domain samples, where the frequency domain samples would be evenly distributed over a period of 1 second. Noise reduction **115** would analyze the 256 samples with respect to each frequency bin in order to determine which frequency bins to determine which bins are associated with steady-state signals and which bins are associated with transient signals. Noise reduction could then analyze another 256 frequency domain samples. Each set of 256 frequency domain samples could have a specified overlap with a preceding set of 256 frequency domain samples and a subsequent set of 256 frequency domain samples. If the overlap is specified to be 50%, then each set of 256 frequency domain samples would include the last 128 samples of the immediately preceding set of samples and the first 128 samples of the immediately following set of samples. In some embodiments, noise reduction **115** may perform operations in the time domain without first transforming into the frequency domain. In such embodiments, noise reduction **115** may include mul-

tiple parallel bandpass filters (not explicitly shown) corresponding to the frequency bins described herein.

[0024] In addition, noise reduction **115** produces a control signal that identifies when noise reduction **115** detects a signal of interest in the environment of the listener. In general, a signal of interest includes any sounds from the environment that are not low-level, steady-state sounds, including, without limitation, human speech, an automobile horn, sounds of an oncoming vehicle, and an alarm. These types of important sounds emanating from the environment are typically characterized as an audio signal that has a high audio level relative to the average background audio level and is intermittent, acting as an interruption. Stated another way, a signal of interest includes any intermittent audio sound having a high audio level relative to the average audio signal level received by microphone arrays **150(0)** and **150(1)**. If noise reduction **115** detects such a signal, then noise reduction **115** transmits a corresponding signal to ducker **165**, as further described herein. In various embodiments, noise reduction **115** may reduce noise in the received signal via other approaches, including, without limitation, spectral subtraction and speech detection, recognition, and extraction.

[0025] In some embodiments, noise reduction **115** may also include active noise cancellation (ANC) functionality (not explicitly shown). In such embodiments, noise reduction **115** may perform an ANC function with respect to frequency bins associated with frequencies at or below a threshold frequency, such as 200 Hz. Noise reduction **115** may perform a noise reduction function, as described herein, with respect to frequency bins associated with frequencies above the threshold frequency, such as 200 Hz.

[0026] After performing noise reduction and optionally performing ANC, noise reduction **115** transmits the resulting audio signal to equalizer **120**.

[0027] Equalizer **120** receives audio signals from noise reduction **115**. Equalizer **120** performs frequency-based amplitude adjustments on the received audio signals in order to improve audio quality for audio signals received from the environment of the listener. Environmental studio signals that reach the listener's ears via microphone arrays **110(0)** and **110(1)** of audio processing system **100** typically sound different to the listener relative to the same audio sounds that reach the listener's ears when audio processing system **100** is not being used. Such acoustic differences result from acoustic changes that occur due to covering the ears with headphones or inserting earphones into the ear canals. Equalizer **120** compensates for such differences by selectively increasing, decreasing, or maintaining volume levels in various frequency bands in the audible range.

[0028] In some embodiments, equalizer **120** may amplify audio signals in certain frequency bands in order to make such audio signals more noticeable to the user, even if such amplification renders the audio signal less natural sounding. In this way, equalizer **120** may amplify certain audio signals, such as speech or alarms, so that the listener may readily hear these certain audio signals. For example, and without limitation, equalizer **120** could amplify signals that occur in frequency bands corresponding to human speech. As a result, the listener would readily hear human speech via the environment, even if the resulting audio signal sounds less natural to the listener. In some embodiments, equalizer **120** may filter out signals in a certain frequency range that are not of interest to the listener. In one example, and without limitation, equalizer **120** could filter out signals with frequencies below 120 Hz, where such signals could be associated with background noise. Equalizer **120** transmits the equalized audio signal to gate **125**.

[0029] Gate **125** receives audio signals from equalizer **120** and suppresses audio signals that fall below a threshold volume, or amplitude, level. Audio signals above the threshold volume, or amplitude, level pass through gate **125** to limiter **130**. As a result, gate **125** further suppresses low level audio signals, such as hiss and hum. In some embodiments, the threshold level may be constant across the relevant frequency band. In other embodiments, the threshold level may vary across the relevant frequency band. In these latter embodiments, the gate threshold level may be higher in certain frequency bands and lower in other frequency bands. In other words, the gating function performed by gate **125** is a function of the audio signal frequency. Gate **125** transmits the resulting audio signal to limiter **130**.

[0030] Limiter **130** rapidly detects loud sounds before such loud signals reach the listener's ears and limits such loud signals so as not to exceed a maximum allowable audio level. In this way, limiter **130** attenuates loud signals to protect the listener. In one example, and without limitation, limiter **130** could have a maximum allowable audio level of 95 dB SPL. In such cases, if limiter **130** receives audio signals that exceed 95 dB SPL, then limiter **130** would attenuate the audio signal such that the resulting audio signal would not exceed 95 dB SPL. In some embodiments, limiter **130** may also perform a compression function such that the audio level limiting occurs gradually as the volume increase, rather than abruptly clipping all audio signals above the maximum allowable audio level. Generally, such dynamic range processing leads to a more comfortable listening experience because large volume fluctuations are reduced. Limiter transmits the resulting audio signal to mixers **135(0)** and **135(1)**.

[0031] Subharmonic processing **155** receives audio signals from a playback device (not explicitly shown) from an audio feed **150**. Subharmonic processing **155** receives these audio signals via any technically feasible technique, including, without limitation, a hard-wired connection, a Bluetooth or Bluetooth LE connection, and a wireless Ethernet connection. Subharmonic processing **155** synthesizes and boosts audio signals that are subharmonic signals of the received audio signal. Such subharmonic synthesis mixes, or combines, the received audio signals with the synthesized subharmonic signals to produce a resulting audio signal with a higher bass level relative to audio signals that have not been so processed. Certain listeners may prefer subharmonic processing **155** while other listeners may not prefer such processing. Yet other listeners may prefer subharmonic processing **155** for some genres but not prefer such processing for other genres. In some embodiments, a listener may control whether subharmonic processing **155** is enabled and may also control the level of subharmonic boost performed by subharmonic processing **155**. Subharmonic processing **155** transmits the resulting audio signal to automatic gain control **160**.

[0032] Automatic gain control **160** receives audio signals from subharmonic processing **155**. Automatic gain control **160** amplifies the audio level of quieter sounds and reduces the level of louder sounds to produce a more consistent output volume over time. Automatic gain control **160** is tuned with a fixed target audio level of the received audio

signals. Typically, the fixed target audio level is a factory setting established by the manufacturer during product development and manufacturing. In one embodiment, this fixed target audio level is −24 dB. Automatic gain control **160** then determines that a portion of the received audio signals differs from this fixed target audio level. Automatic gain control **160** calculates a scaling factor such that, when the received audio signals are multiplied by the scaling factor, the resulting audio signals are closer to the fixed target audio level. In one example, and without limitation, songs could be mastered at different volume levels based on various factors, such as the time period when the songs were produced and the genre of the songs. If the listener selects songs with varying master record levels, then the listener could experience difficulty listening to these songs. If the listener adjusts the volume level to listen to a quiet song, then the volume could be uncomfortably loud when a louder song is played. Likewise, if the listener adjusts the volume level to listen to a loud song, then the volume could be too low to hear a quieter song. Automatic gain control **160** processes received audio signals such that listening volume of the music would be more consistent over time.

[0033] Ducker **165** receives audio signals from automatic gain control **160**. Ducker also receives a control signal from noise reduction **115**. This control signal identifies if and when noise reduction **115** detects a signal of interest in the environment of the listener. If such a signal is detected, then ducker **165** temporarily reduces the volume level of the received audio signal. In this manner, ducker **165** reduces, or ducks, the audio from the playback device when a signal of interest is received from the environment. As a result, the listener more readily hears signals of interest from the environment. In other words, when a signal of interest is present on microphone arrays **105(0)** and **105(1)**, ducker **165** temporarily reduces, or ducks, the music level so that the signal of interest can be heard and understood. Ducker **165** transmits the resulting audio signals to mixers **140(0)** and **140(1)**.

[0034] Mixers **135(0)** and **135(1)** receive processed environmental audio signals from limiter **130** and processed music or other audio from ducker **165**. Mixer **135(0)** mixes, or combines, received audio signals for the left audio channel, and, correspondingly, mixer **135(1)** mixes received audio signals for the right audio channel. In some embodiments, mixers **135(0)** and **135(1)** may perform a simple additive or multiplicative mix of the received audio signals. In other embodiments, mixers **135(0)** and **135(1)** may weight each of the incoming audio signals based on the user volume settings. In these latter embodiments, a louder audio signal received from ducker **165**, such as when the listener increases the listening volume, causes the audio signal received from limiter **130** to increase, but perhaps by a different amount relative to the audio signal from ducker **165**. After performing the mix function, left mixer **135(0)** and right mixer **135(1)** transmit the resulting signals to left amplifier **140(0)** and right amplifier **140(1)**. Left amplifier **140(0)** and right amplifier **140(1)** amplify the received audio signals based on a volume control (not explicitly shown), and transmit the resulting audio signal to left speaker **145(0)** and right speaker **145(1)**, respectively. Left speaker **145(0)** and right speaker **145(1)** also receive an audio signal from a direct feed **170**. Direct feed represents an acoustic signal received from the environment of the listener. If the audio processing system **100** is no longer functioning, such as when the battery power source drops below a threshold voltage level, left speaker **145(0)** and right speaker **145(1)** transmit the signal from the direct feed **170** rather than the processed audio signal received from left amplifier **140(0)** and right speaker **140(1)**, respectively.

[0035] In some embodiments, the listener may control certain functions or set certain parameters of audio processing system **100** via one or more capacitive touch sensors (not explicitly shown). When the listener touches such a sensor, a change in capacitance of the capacitive touch sensor is detected. Such a change in capacitance causes audio processing system **100** to perform a function, including, without limitation, changing a beamforming mode, and changing a filter parameter. The listener may control certain functions or set certain parameters of audio processing system **100** via multiple capacitive touch sensors that detect movement. For example, and without limitation, if three or more capacitive touch sensors are arranged in a vertical line, the listener could increase a volume level by touch the lower capacitive touch sensor with a finger and moving the finger vertically to the middle and the upper capacitive touch sensors. Correspondingly, the listener could decrease a volume level by touch the upper capacitive touch sensor with a finger and moving the finger vertically to the middle and the lower capacitive touch sensors. In other embodiments, the listener may control certain functions or set certain parameters of audio processing system **100** via an application that executes on a computing device, including, without limitation, a smartphone, a tablet computer, or a laptop computer. Such an application may communicate with audio processing system **100** via any technically feasible approach, including, without limitation, Bluetooth, Bluetooth LE, and wireless Ethernet.

Operations of the Audio Processing System

[0036] FIG. **2** conceptually illustrates one application of the audio processing system of FIG. **1**, according to various embodiments. As shown, riders **210(0)**, **210(1)**, **210(2)**, **210(3)**, and **210(4)** are riding bicycles in a straight line. Rider **210(2)** is wearing a personal listening device (not explicitly shown), that exhibits a dipole, or FIG. **8**, pattern, as illustrated by dipole patterns **220(0)** and **220(1)**. Dipole pattern **220(0)** and dipole pattern **220(1)** correspond to the right ear and the left ear of rider **210(2)**, respectively.

[0037] As illustrated, the distance of the outline of dipole pattern **220(0)** and dipole pattern **220(1)** from the right ear and the left ear of rider **210(2)** indicates the signal strength as a function of angle. Bicycle riders often form pacelines, where bicyclists are directly in front/back of one another. This paceline pattern reduces the wind drag (since only the front rider is breaking the drag), and is also safer when there are cars in the road. Because rider **210(2)** wears a personal listening device with a dipole pattern **220(0)** and **220(1)**, rider **210(2)** hears audio signals from front riders **210(0)** and **210(1)** and rear riders **210(3)** and **210(4)** more readily, relative to audio signals from the left side and right side of rider **210(2)**.

[0038] FIG. **3** conceptually illustrates another application of the audio processing system of FIG. **1**, according to various other embodiments. As shown, skier **310**, is wearing a personal listening device (not explicitly shown), that exhibits a cardioid pattern, as illustrated by cardioid pattern **320**. Cardioid pattern **320** corresponds to the left ear of skier **310**. For clarity, the cardioid pattern corresponding to the

right ear of skier **310** is not explicitly shown in FIG. **3**. As illustrated, the distance of the outline of cardioid pattern **320** from the left ear of skier **310** indicates the signal strength as a function of angle. Sounds from below skier **310**, such as the sound of ski against snow and ice, are suppressed relative to sounds from other directions, including sounds originating from a lateral direction to or from above skier **310**. The application illustrated in FIG. **3** is also relevant to other related activities, including, without limitation, snowboarding, running, and treadmill exercise.

[0039] FIGS. **4**A-**4**B set forth a flow diagram of method steps for processing playback and environmental audio signals, according to various embodiments. Although the method steps are described in conjunction with the systems of FIGS. **1**-**3**, persons skilled in the art will understand that any system configured to perform the method steps, in any order, is within the scope of the present disclosure.

[0040] As shown, a method **400** begins at step **402**, where microphone arrays **105**(**0**) and **105**(**1**) associated with an audio processing system **100** receive audio signals from the environment of a listener. At step **404**, beamformers **110**(**0**) and **110**(**1**) directionally attenuate and amplify the audio signals from microphone arrays **110**(**0**) and **110**(**1**) according to a particular beamforming mode, including, without limitation, omnidirectional, dipole, and cardioid patterns. At step **406**, noise reduction **115** reduces the audio levels of steady-state signals, such as hum, hiss, and wind, while amplifying the audio levels of transient signals, such as human speech, car horns, and alarms. At step **408**, noise reduction **115** also performs active noise cancellation on part of the received audio signal. At step **410**, equalizer compensates for frequency imbalances, such as imbalances associated with wearing headphones or earphones, relative to not wearing any personal listening device.

[0041] At step **412**, gate **125** suppresses audio signals that are below a threshold volume or amplitude level. In some embodiments, gate **125** the threshold volume may be constant over the relevant frequency range. In other embodiments, the threshold volume may vary as a function of frequency. At step **414**, limiter **130** attenuates audio signals that exceed a specified maximum allowable audio level. At step **416**, subharmonic processing **155** synthesizes low frequency audio signals based on the audio signal feed received from a playback device. At step **418**, automatic gain control **160** adjusts the volume of the audio signal feed received from the playback device. For example, and without limitation, automatic gain control **160** could increase the volume of quiet songs and could decrease the volume of loud songs. At step **420**, ducker **165** temporarily reduces the volume of the audio signal feed received from the playback device based on a control signal from noise reduction **115** indicating that a source of interest is received from the environment of the listener.

[0042] At step **422**, left mixer **135**(**0**) and right mixer **135**(**1**) mix the audio received from limiter **130** with the audio received from ducker **165** for the left and right channels, respectively. At step **424**, left amplifier **140**(**0**) and right amplifier **140**(**1**) amplify audio signals received from left mixer **135**(**0**) and right mixer **135**(**1**), respectively. At step **426**, left amplifier **140**(**0**) and right amplifier **140**(**1**) transmit the final audio signals to left speaker **145**(**0**) and right speaker **145**(**1**), respectively. The method **400** then terminates. In some embodiments, the method **400** does not terminate, but rather the components of the audio processing system **100** continue to perform the steps of method **400** in a continuous loop. In these embodiments, after step **426** is performed, the method **400** proceeds to step **402**, described above. The steps of method **400** continue to be performed in a continuous loop until certain events occur, such as powering down a device that includes the audio processing system **100**.

[0043] In sum, the disclosed techniques enable a listener using a personal listening device to hear a mix of music or other desired audio with certain sounds of interest from the environment of the listener. Steady state signals from the environment, such as hiss, hum, and traffic din, are removed from the audio environment while music and environmental sounds of interest are enhanced. Audio from the listener's environment are received via microphone arrays and processed by beamformers, noise reduction, equalization, gating, and limiting. Music and other audio signals received from a playback device are processed via subharmonic processing, automatic gain control, and ducking. Mixers perform a mix of the environmental audio and the playback audio, and transmit the resulting signals to amplifiers which, in turn, transmit the audio signals to speakers in a pair of headphones, earphones, earbuds, or other personal listening device.

[0044] At least one advantage of the approach described herein is that a listener who uses the disclosed personal listening device hears a high-quality audio signal from a playback device plus certain audio sounds of interest from the environment, while, at the same time, other sounds from the environment are suppressed relative to the sounds of interest. As a result, the potential for the listener to hear only desired audio signals is improved, leading to a better quality audio experience for the listener.

[0045] The descriptions of the various embodiments have been presented for purposes of illustration, but are not intended to be exhaustive or limited to the embodiments disclosed. Many modifications and variations will be apparent to those of ordinary skill in the art without departing from the scope and spirit of the described embodiments.

[0046] Aspects of the present embodiments may be embodied as a system, method or computer program product. Accordingly, aspects of the present disclosure may take the form of an entirely hardware embodiment, an entirely software embodiment (including firmware, resident software, micro-code, etc.) or an embodiment combining software and hardware aspects that may all generally be referred to herein as a "circuit," "module" or "system." Furthermore, aspects of the present disclosure may take the form of a computer program product embodied in one or more computer readable medium(s) having computer readable program code embodied thereon.

[0047] Any combination of one or more computer readable medium(s) may be utilized. The computer readable medium may be a computer readable signal medium or a computer readable storage medium. A computer readable storage medium may be, for example, but not limited to, an electronic, magnetic, optical, electromagnetic, infrared, or semiconductor system, apparatus, or device, or any suitable combination of the foregoing. More specific examples (a non-exhaustive list) of the computer readable storage medium would include the following: an electrical connection having one or more wires, a portable computer diskette, a hard disk, a random access memory (RAM), a read-only memory (ROM), an erasable programmable read-only

memory (EPROM or Flash memory), an optical fiber, a portable compact disc read-only memory (CD-ROM), an optical storage device, a magnetic storage device, or any suitable combination of the foregoing. In the context of this document, a computer readable storage medium may be any tangible medium that can contain, or store a program for use by or in connection with an instruction execution system, apparatus, or device.

[0048] Aspects of the present disclosure are described above with reference to flowchart illustrations and/or block diagrams of methods, apparatus (systems) and computer program products according to embodiments of the disclosure. It will be understood that each block of the flowchart illustrations and/or block diagrams, and combinations of blocks in the flowchart illustrations and/or block diagrams, can be implemented by computer program instructions. These computer program instructions may be provided to a processor of a general purpose computer, special purpose computer, or other programmable data processing apparatus to produce a machine, such that the instructions, which execute via the processor of the computer or other programmable data processing apparatus, enable the implementation of the functions/acts specified in the flowchart and/or block diagram block or blocks. Such processors may be, without limitation, general purpose processors, special-purpose processors, application-specific processors, or field-programmable

[0049] The flowchart and block diagrams in the Figures illustrate the architecture, functionality, and operation of possible implementations of systems, methods and computer program products according to various embodiments of the present disclosure. In this regard, each block in the flowchart or block diagrams may represent a module, segment, or portion of code, which comprises one or more executable instructions for implementing the specified logical function (s). It should also be noted that, in some alternative implementations, the functions noted in the block may occur out of the order noted in the figures. For example, two blocks shown in succession may, in fact, be executed substantially concurrently, or the blocks may sometimes be executed in the reverse order, depending upon the functionality involved. It will also be noted that each block of the block diagrams and/or flowchart illustration, and combinations of blocks in the block diagrams and/or flowchart illustration, can be implemented by special purpose hardware-based systems that perform the specified functions or acts, or combinations of special purpose hardware and computer instructions.

[0050] While the preceding is directed to embodiments of the present disclosure, other and further embodiments of the disclosure may be devised without departing from the basic scope thereof, and the scope thereof is determined by the claims that follow.

What is claimed is:

1. An audio processing system for a personal listening device, comprising:

a first plurality of microphones integrated into the personal listening device and configured to receive a first plurality of audio signals from an environment;

a noise reduction module coupled to the first plurality of microphones and configured to:

detect when a signal of interest is present in the first plurality of audio signals;

upon detecting a signal of interest, transmit a ducking control signal;

an audio ducker coupled to the noise reduction module and configured to:

receive the ducking control signal,

receive a second plurality of audio signals via a playback device,

reduce an amplitude of a second plurality of audio signals relative to the signal of interest based on the ducking control signal; and

a mixer coupled to the audio ducker and configured to combine the first plurality of audio signals and second plurality of audio signals.

2. The audio processing system of claim **1**, wherein the noise reduction module is further configured to:

determine that a first portion of the first plurality of audio signals corresponding to a first frequency band includes a noise signal; and

reduce the amplitude of the first portion of the first plurality of audio signals.

3. The audio processing system of claim **1**, wherein the noise reduction module is further configured to:

determine that a first portion of the first plurality of audio signals corresponding to a first frequency band includes a signal of interest; and

amplify the first portion of the first plurality of audio signals.

4. The audio processing system of claim **1**, further comprising an equalizer configured to perform frequency-based amplitude adjustments on the first plurality of audio signals to compensate for an acoustic change resulting from a physical characteristic of the personal listening device.

5. The audio processing system of claim **1**, further comprising a gate configured to:

determine that a first portion of the first plurality of audio signals is below a threshold amplitude; and

reduce an amplitude of the first portion of the first plurality of audio signals.

6. The audio processing system of claim **1**, further comprising a limiter configured to:

determine that a first portion of the first plurality of audio signals is above a maximum allowable amplitude; and

limit an amplitude of the first portion of the first plurality of audio signals to be no greater than the maximum allowable amplitude.

7. The audio processing system of claim **1**, further comprising a subharmonic processor configured to:

synthesize one or more subharmonic signals corresponding to at least a portion of the second plurality of audio signals to generate a third plurality of audio signals; and

combine the second audio signals with the third plurality of audio signals.

8. The audio processing system of claim **1**, further comprising an automatic gain controller configured to:

calculate a target audio level corresponding to the second plurality of audio signals;

determine that at least a portion of the second plurality of audio signals differs from the target audio level;

calculate a scaling factor such that, when the second plurality of audio signals are multiplied by the scaling factor, the resulting audio signals are closer to the target audio level; and

multiply the second plurality of audio signals by the scaling factor.

9. The audio processing system of claim **1**, wherein the signal of interest comprises an intermittent audio sound having a high audio level relative to an average audio signal level associated with the first plurality of audio signals.

10. The audio processing system of claim **9**, further comprising an amplifier configured to:

amplify the third plurality of audio signals; and

transmit the third plurality of audio signals to a speaker to generate sound output.

11. A method for processing playback and environmental audio signals, the method comprising:

receiving a first plurality of audio signals from an environment;

detecting when a signal of interest is present in the first plurality of audio signals, wherein the signal of interest comprises an intermittent audio sound having a high audio level relative to an average audio signal level associated with the first plurality of audio signals;

upon detecting a signal of interest, transmitting a ducking control signal; and

receiving the ducking control signal,

receiving a second plurality of audio signals via a playback device,

reducing an amplitude of a second plurality of audio signals relative to the signal of interest based on the ducking control signal, and

combining the first plurality of audio signals and second plurality of audio signals.

12. The method of claim **11**, further comprising:

identifying a direction from where the first plurality of audio signals is originating; and

attenuating the first plurality of audio signals based on the direction.

13. The method of claim **12**, wherein attenuating the first plurality of audio signals comprises:

receiving a selection of a beamforming mode;

calculating a scaling factor based on the beamforming mode and the direction; and

applying the scaling factor to the first plurality of audio signals.

14. The method of claim **13**, wherein the beamforming mode comprises an omnidirectional mode, a dipole mode, or a cardioid mode.

15. The method of claim **11**, further comprising:

determining that a first portion of the first plurality of audio signals corresponding to a first frequency band includes a noise signal; and

reducing the amplitude of the first portion of the first plurality of audio signals.

16. The method of claim **11**, further comprising:

determining that a first portion of the first plurality of audio signals corresponding to a first frequency band includes a signal of interest; and

amplifying the first portion of the first plurality of audio signals.

17. A computer-readable storage medium including instructions that, when executed by a processor, cause the processor to process playback and environmental audio signals, by performing the steps of:

receiving a first plurality of audio signals from an environment;

detecting when a signal of interest is present in the first plurality of audio signals, wherein the signal of interest comprises an intermittent audio sound having a high audio level relative to an average audio signal level associated with the first plurality of audio signals;

upon detecting a signal of interest, transmitting a ducking control signal; and

receiving the ducking control signal,

receiving a second plurality of audio signals via a playback device,

reducing an amplitude of a second plurality of audio signals relative to the signal of interest based on the ducking control signal, and

combining the first plurality of audio signals and second plurality of audio signals.

18. The computer-readable storage medium of claim **17**, further including instructions that, when executed by a processor, cause the processor to perform the steps of:

identifying a direction from where the first plurality of audio signals is originating; and

attenuating the first plurality of audio signals based on the direction.

19. The computer-readable storage medium of claim **18**, wherein attenuating the first plurality of audio signals comprises:

receiving a selection of a beamforming mode;

calculating a scaling factor based on the beamforming mode and the direction; and

applying the scaling factor to the first plurality of audio signals.

20. The computer-readable storage medium of claim **19**, wherein the beamforming mode comprises an omnidirectional mode, a dipole mode, or a cardioid mode.

* * * * *