US006415034B1

(12) **United States Patent**
Hietanen

(10) **Patent No.: US 6,415,034 B1**
(45) **Date of Patent: *Jul. 2, 2002**

(54) **EARPHONE UNIT AND A TERMINAL DEVICE**

(75) Inventor: **Jarmo Hietanen**, Tampere (FI)

(73) Assignee: **Nokia Mobile Phones Ltd.**, Espoo (FI)

(*) Notice: This patent issued on a continued prosecution application filed under 37 CFR 1.53(d), and is subject to the twenty year patent term provisions of 35 U.S.C. 154(a)(2).

Subject to any disclaimer, the term of this patent is extended or adjusted under 35 U.S.C. 154(b) by 0 days.

(21) Appl. No.: **08/906,371**

(22) Filed: **Aug. 4, 1997**

(30) **Foreign Application Priority Data**

Aug. 13, 1996 (FI) 963173

(51) **Int. Cl.**[7] **A61F 11/06**; G10K 11/16; H04R 25/00

(52) **U.S. Cl.** **381/71.6**; 381/326; 381/151

(58) **Field of Search** 381/370, 375, 381/380, 71.6, 23.1, 60, 317, 318, 320, 326, 71.1, 72, 74, 92, 94.1, 151, 66, 372; 379/430; 181/127, 128

(56) **References Cited**

U.S. PATENT DOCUMENTS

3,995,113 A		11/1976	Tani	179/1 P
4,975,967 A	*	12/1990	Rasmussen	381/380
5,099,519 A		3/1992	Guan	381/183
5,285,165 A		2/1994	Renfors et al.	328/167
5,298,692 A	*	3/1994	Ikeda et al.	381/380
5,313,661 A		5/1994	Malmi et al.	455/232.1
5,343,523 A		8/1994	Bartlett et al.	379/430
5,406,635 A		4/1995	Jarvinen	381/94
5,426,719 A		6/1995	Franks et al.	395/2.37
5,692,059 A	*	11/1997	Kruger	381/151
5,732,143 A	*	3/1998	Andrea et al.	381/71.6
5,748,725 A	*	5/1998	Kubo	381/71.1
5,790,684 A	*	8/1998	Niino et al.	381/326
5,909,498 A	*	6/1999	Smith	381/380
5,933,506 A	*	8/1999	Aoki et al.	381/151

FOREIGN PATENT DOCUMENTS

EP	0637187 A1	2/1995
GB	2226931	7/1990
GB	2281004	2/1995
WO	WO 94/06255	3/1994

OTHER PUBLICATIONS

Journal of Sound And Vibration, 1994, vol. 174, pp. 617–639, "Simultaneous Piezoelectric Sensing/Actuation: Analysis And Application to Controlled Structures", Anderson et al.

Advanced Engineering Mathematics, sixth edition, pp. 271 & 272, "Convolution. Integral Equations", Erwin Kreyszig.

* cited by examiner

Primary Examiner—Xu Mei
(74) *Attorney, Agent, or Firm*—Perman & Green, LLP

(57) **ABSTRACT**

The scope of the present invention is an earphone unit (**11**) to be mounted either on external ear (**18**) or in auditory tube (**10**), in which unit both a speech registering microphone (**13**) and a speech reproducing ear capsule (**12**) have been placed. The earphone unit (**11**) is suitable for use in connection with various terminal devices, in particular with mobile stations. When a user's speech is registered, the ear capsule signal (**12'**) containing disturbances is canceled utilizing methods based upon determining the transfer function between the ear capsule (**12**) and the microphone (**13**). A separate error microphone (**14**) is used for eliminating external sources of disturbances (**17**), such as noise. In order to improve the quality of speech and prevent problems caused by double-talk, signals (**15'**, **12'**, **17'**) are processed digitally utilizing e.g. band limitation and prediction of missing bands.

13 Claims, 7 Drawing Sheets

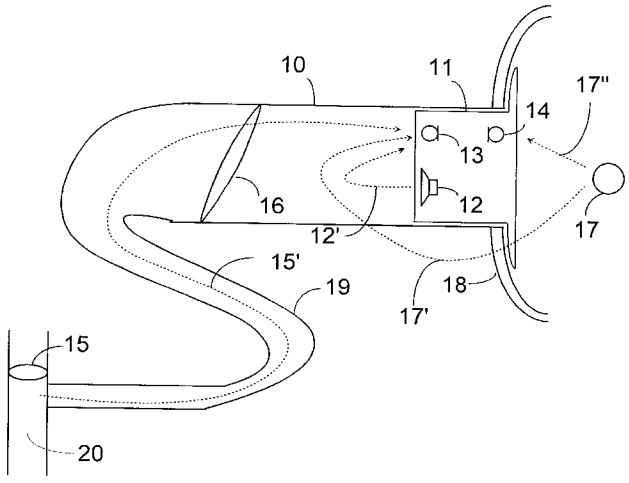

Samsung et al. v. Techiya
IPR2024-01032
Exhibit 1031

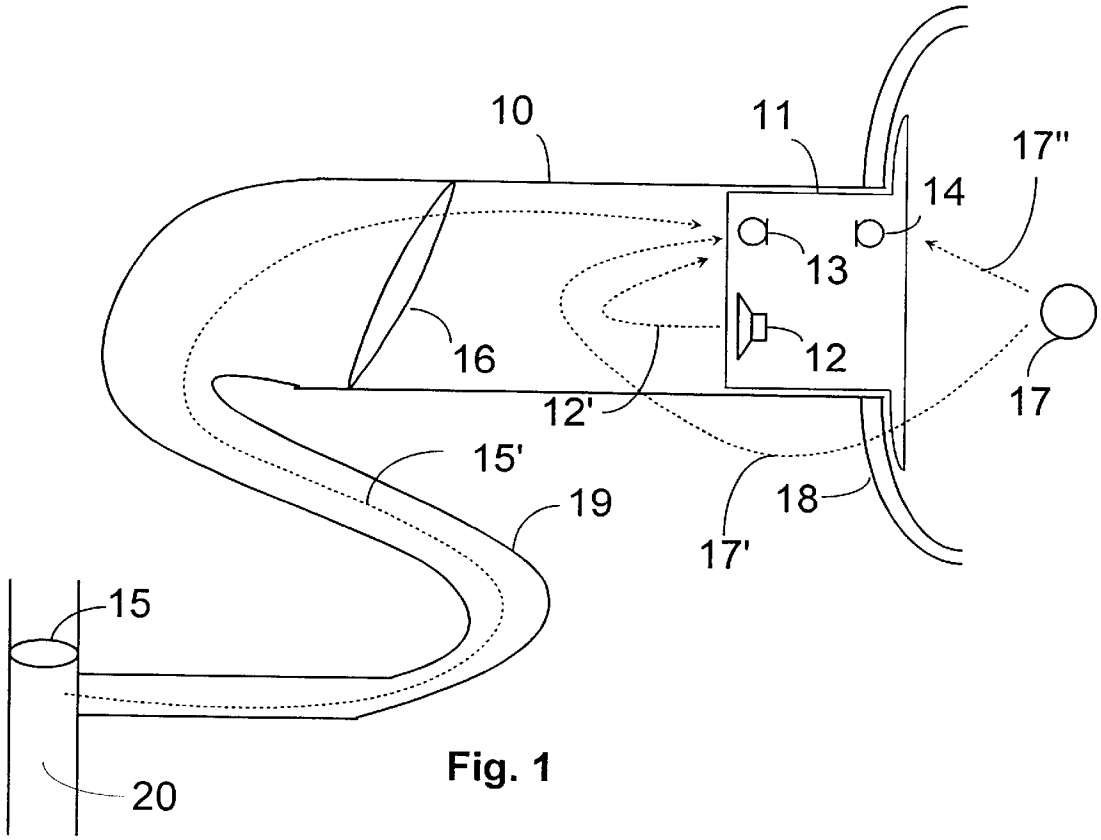

Fig. 1

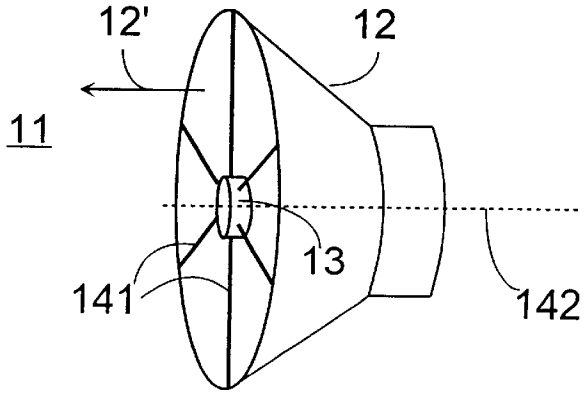

Fig. 2A

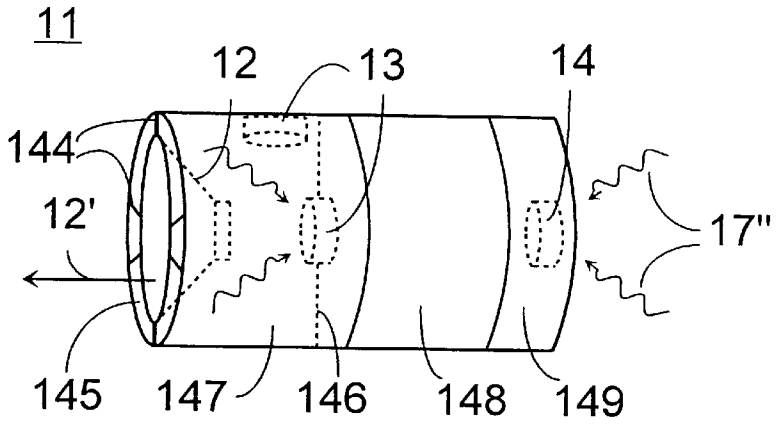

Fig. 2B

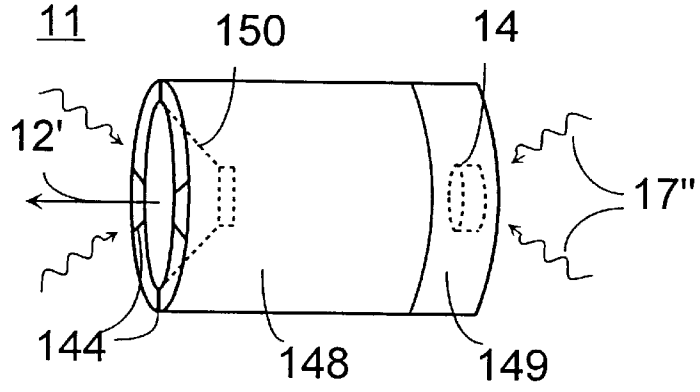

Fig. 2C

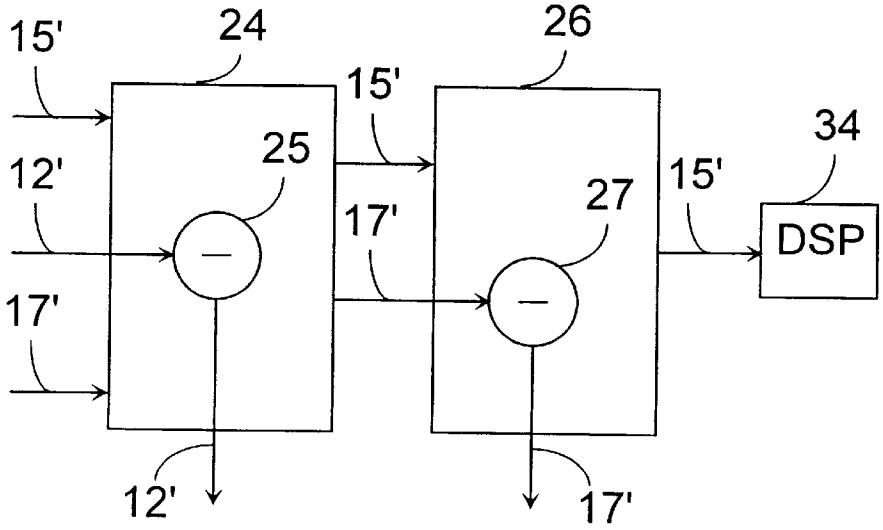

Fig. 3

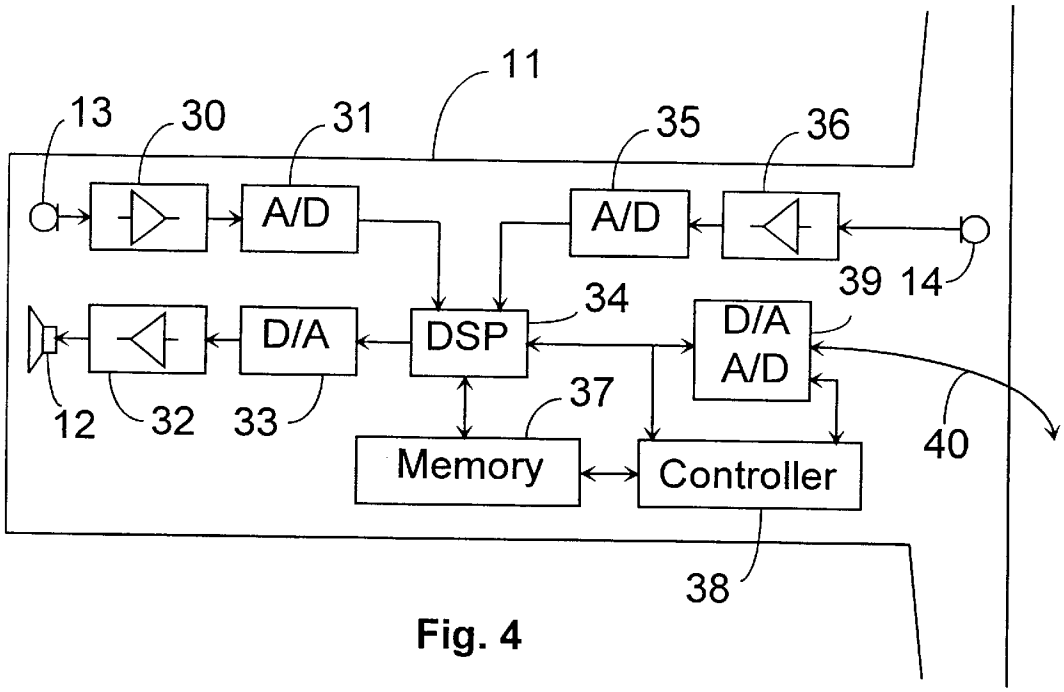

Fig. 4

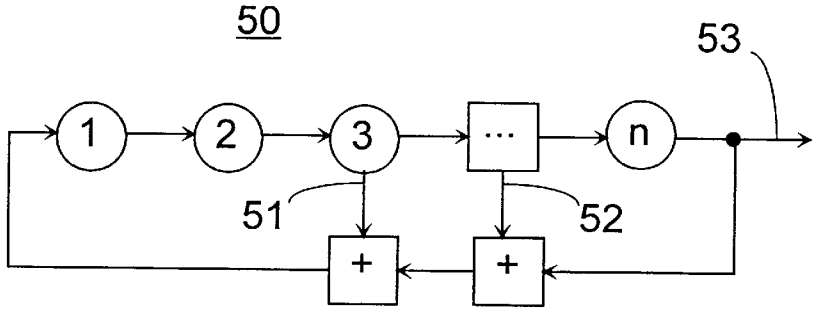

Fig. 5

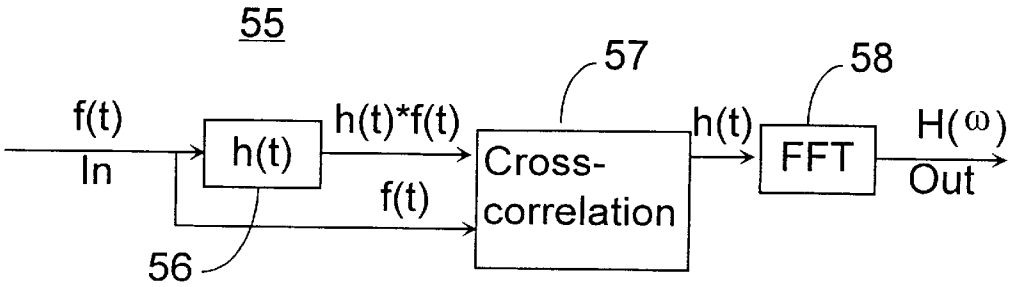

Fig. 6

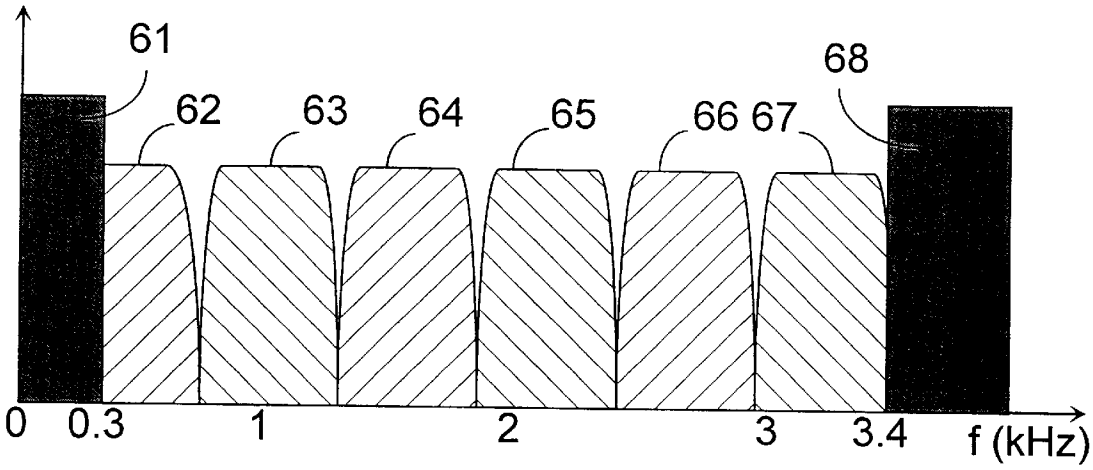
61
62
63
64
65
66 67
68
0
0.3
1
2
3
3.4
f (kHz)

Fig. 7

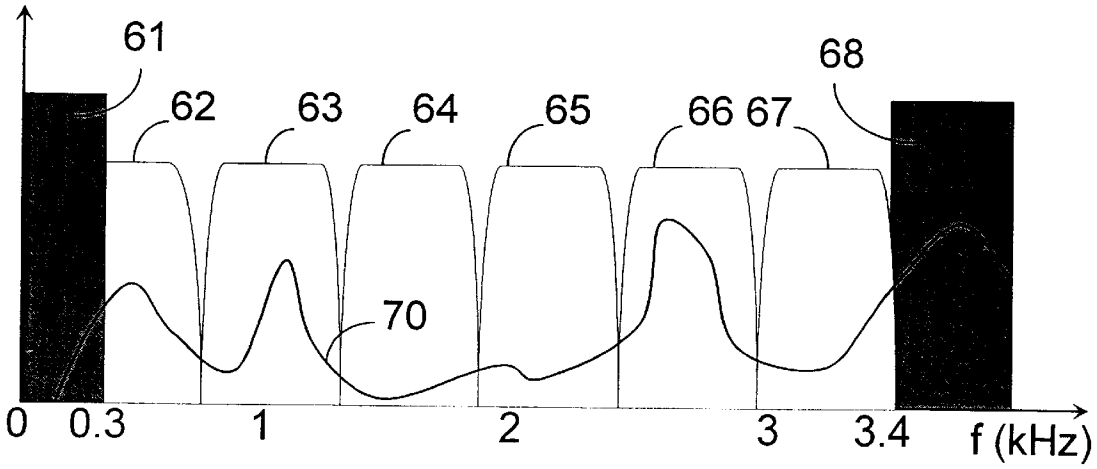
61
62
63
64
65
66 67
68
70
0
0.3
1
2
3
3.4
f (kHz)

Fig. 8

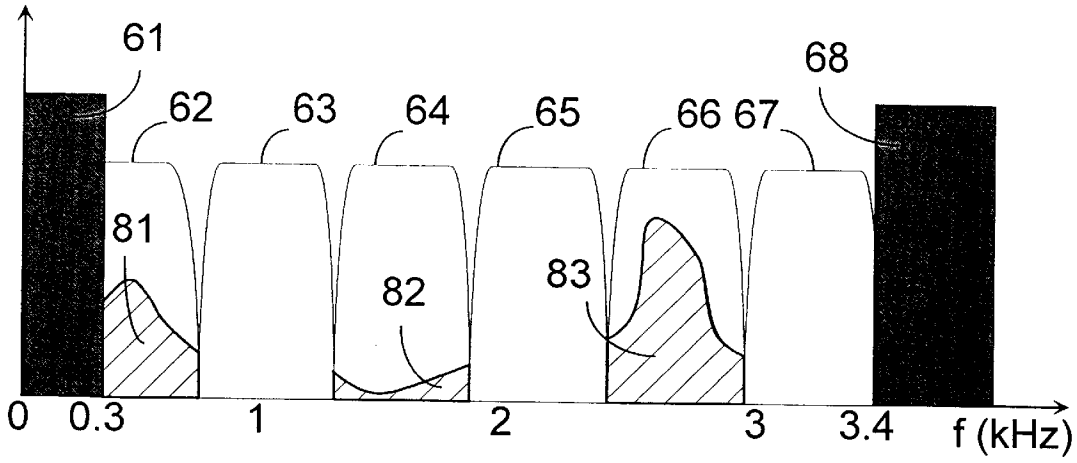
61
62
63
64
65
66 67
68
81
82
83
0
0.3
1
2
3
3.4
f (kHz)

Fig. 9

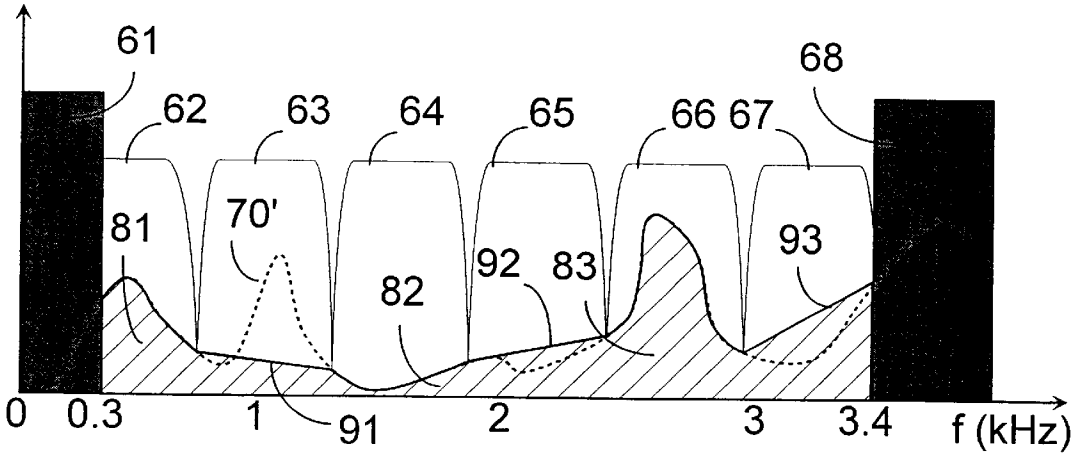
61
62
63
64
65
66 67
68
81
70'
82
92
83
93
91
0
0.3
1
2
3
3.4
f (kHz)

Fig. 10

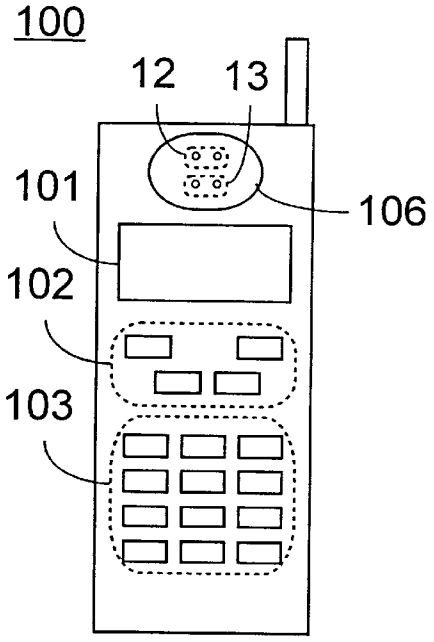

Fig. 11A

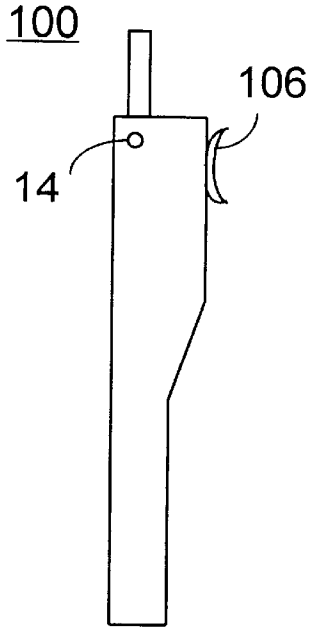

Fig. 11B

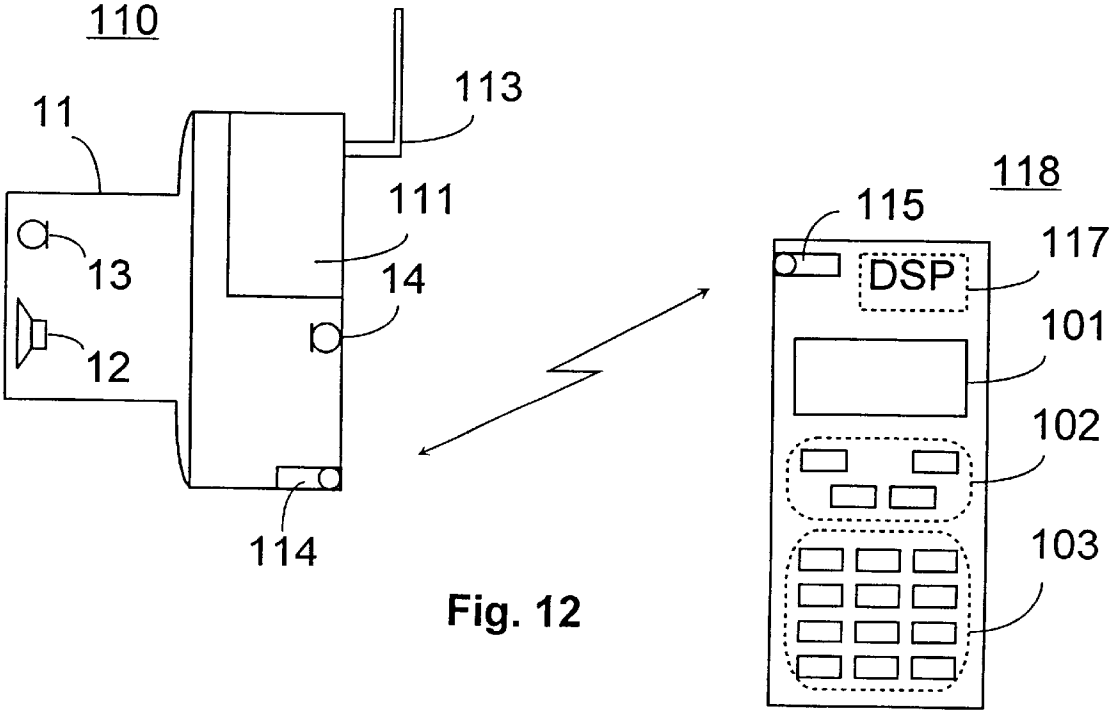

Fig. 12

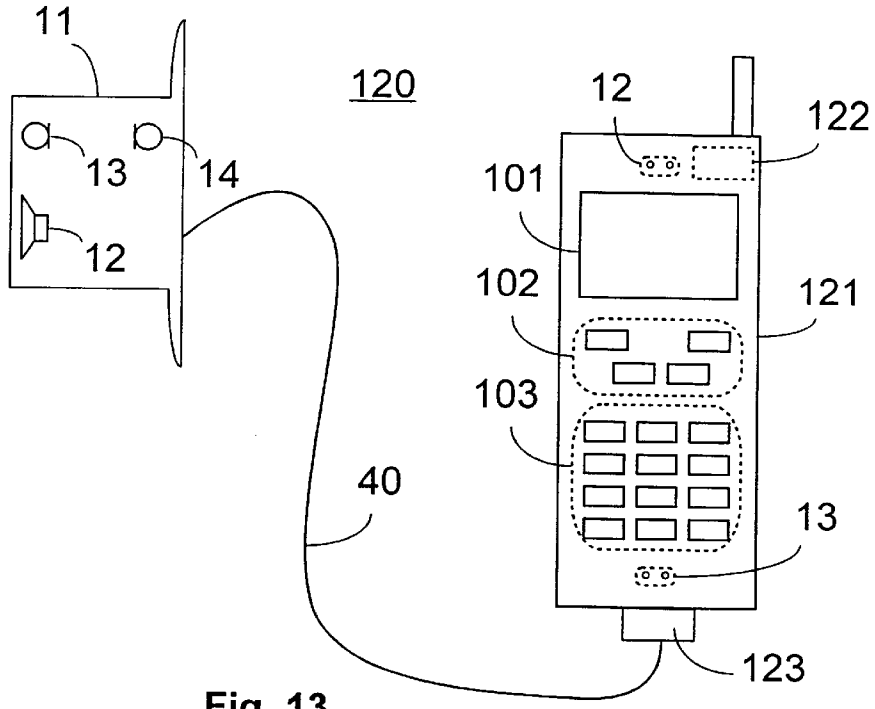
11
120
12
122
13
14
101
12
102
121
103
40
13
123

Fig. 13

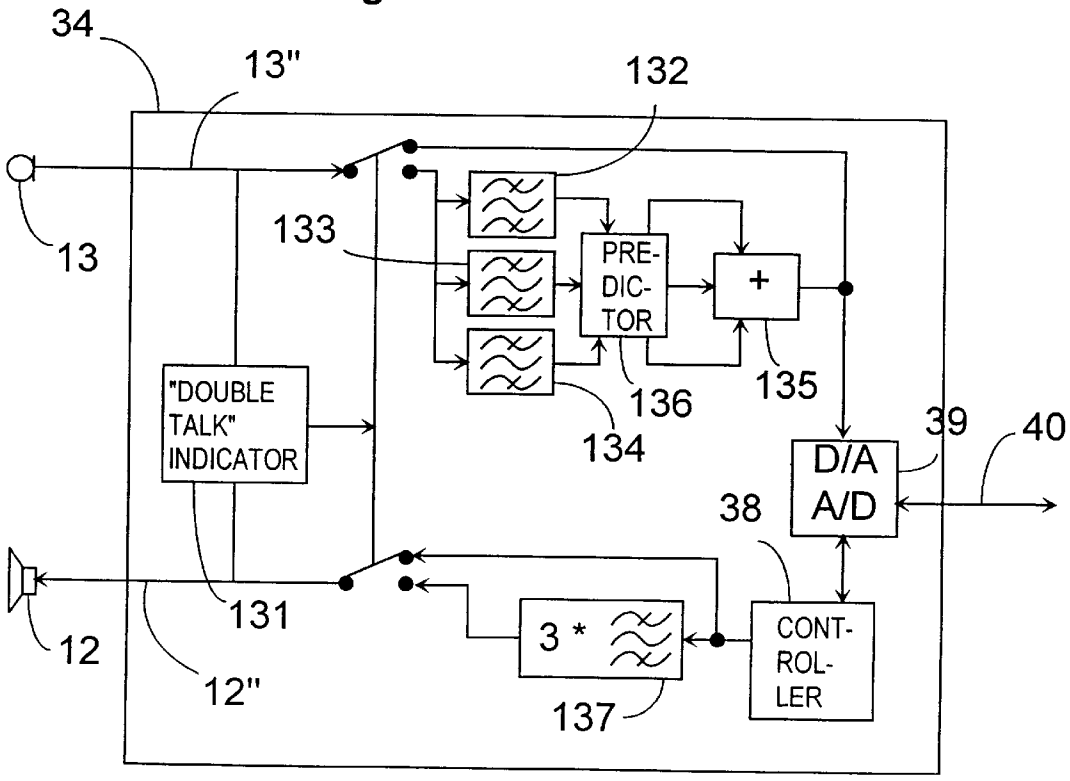
34
13"
132
13
133
PRE-
DIC-
TOR
+
"DOUBLE
TALK"
INDICATOR
136
135
134
39
40
D/A
A/D
38
131
12
12"
3 *
CONT-
ROL-
LER
137

Fig. 14

EARPHONE UNIT AND A TERMINAL DEVICE

FIELD OF THE INVENTION

The present invention relates to an earphone unit mounted in the auditory tube (also called auditory canal) or on the ear, which unit comprises voice reproduction means for converting an electric signal into acoustic sound signal and for forwarding the sound signal into the user's ear, and speech detection means for detecting the speech of the user of the earphone unit from the user's said same auditory tube. The earphone unit is suitable for use in connection with a terminal device, especially in connection with a mobile station. In addition to above the invention is related to a terminal device incorporating or having a separate earphone unit and to a method of reproduction and detection of sound.

BACKGROUND OF THE INVENTION

Traditional headsets equipped with a microphone have an earpiece for either both ears or only for one ear, from which earpiece in general a separate microphone bar extending to mouth or the side of mouth is protruding. The earpiece is either of a type to be mounted on the ear or in the auditory tube. The microphone used is air connected, either a pressure or a pressure gradient microphone. The required amplifiers and other electronics are typically placed in a separate device. If a wireless system is concerned, it is possible to place some of the required electronics in connection with the earpiece device, and the rest in a separate transceiver unit. It is also possible to integrate the transceiver unit in the earpiece device.

Patent publication U.S. Pat. No. 5,343,523 describes an earphone solution designed for pilots and telephone operators, in which earpieces are mounted on the ears and a separate microphone suspended from a bar is mounted in front of the mouth. In addition to above, a separate error microphone has been arranged in connection with the earpieces, by utilizing which microphone some of the environmental noise detected by the user can be cancelled and the intelligibility of speech can be improved in this way.

Alternative solutions have been developed for occasions in which a separate microphone suspended from a bar cannot be used. Detection of speech through soft tissue is prior known e.g. from throat microphones used in tank headgear. On the other hand, detection of speech through the auditory tube has been presented in patent publication U.S. Pat. No. 5,099,519. In said patent publication it has been said that the advantages of speech detection through the auditory tube are the small size of the earpiece and the suitability of the device to noisy environment. A microphone closing the auditory tube acts also as an elementary hearing protector.

Patent publication U.S. Pat. No. 5,426,719 presents a device which also acts as a combined hearing protector and as a means of communication. In said patent publication, as well as also in the above mentioned patent publication U.S. Pat. No. 5,099,519, the microphone is placed in one earpiece and the ear capsule respectively in the other earpiece. This means that a device according to any of the two patent publications requires using both ears, which makes the device bulky and limits the field of use of the device.

Patent publication WO 94/06255 presents an ear microphone unit for placement in one ear only. The unit is mounted in a holder for placement in the outer ear. For use in full duplex ear communication the holder further has a sound generator. Between the sound generator and the microphone is mounted a vibration absorbing unit. Also the sound generator is embedded in a thin layer of attenuation foam.

Another device for two-way acoustic communication through one ear is described in patent publication U.S. Pat. No. 3,995,113. This device is based on an electro-acoustic mutual transducing device adapted to be inserted into the auditory canal and which can function both as a speaker and microphone. It forms an ear-plug type transmitting-receiving device. The device additionally includes means for reducing the mechanical impedance of the vibrating system and a means for eliminating the noise resulting from said impedance reducing means.

SUMMARY OF THE INVENTION

Now an improved earphone unit has been invented, which unit facilitates placing of a microphone and an ear capsule in same auditory tube or on the same ear and which has means for eliminating sounds produced into the auditory tube by the ear capsule from sounds detected by the microphone. This improves the detection of the user's speech, which is registered via the auditory tube, especially when the user speaks simultaneously as sound is reproduced by the ear capsule. In telephones, such as mobile phones this is needed especially in double talk situations, i.e. when both the near end and far end speaker speak simultaneously. It is possible to install in the earphone unit also a separate error microphone for elimination of external disturbances. It is possible to use for microphones and ear capsules any means of conversion prior known to a person skilled in the art that convert acoustic energy into electric form (microphone), and electric energy into acoustic form (ear capsule, loudspeaker). The invention presents a new solution for determining the acoustic coupling of a microphone and a loudspeaker and for optimizing voice quality using digital signal processing.

The earphone unit according to the invention is suitable for use in occasions in which environmental noise prevents from using a conventional microphone placed in front of mouth. Respectively, the small size of the earphone unit according to the invention enables using the device in occasions in which small size is an advantage e.g. due to inconspicuousnes. In this way the earphone unit according to the invention is particularly suitable for use e.g. in connection with a mobile station or a radio telephone while moving in public places. The use of the earphone unit is not limited to wireless mobile stations, but it is equally possible to use the earphone unit in connection with even other terminal devices. One preferable field of use is to connect the earphone unit to a traditional telephone or other wire-connected telecommunication terminal device. It is equally possible to use the earphone unit according to the invention in connection with various interactive computer programs, radio tape recorders and dictating machines. It is also possible to integrate the earphone unit as a part of a terminal device as presented in the embodiments below.

When an attempt is made to detect from the auditory tube simultaneously speech of very low sound pressure level and sound is fed with relatively high sound pressure level into the same ear using the ear capsule, problems arise when analogue summing units and amplifiers equipped with fixed adjustments are used. In this system the auditory tube is an important acoustic component, because it has an effect upon both the user's speech and on the voice produced by the ear capsule. Because the auditory tube of each person is unique, the transfer function between the microphone and the ear

capsule is individual. In addition to this the transfer function is different each time the earphone unit is set into place, because the ear capsule may be set e.g. at a different depth. If the setting of the earphone unit is not completely successful, the acoustic leakage of the ear capsule may be beyond control, which can disturb the operation of the device. An acoustic leakage means e.g. a situation in which environmental noise leaks past an ear capsule placed in the auditory tube into the auditory tube. If an earphone unit according to the invention consisting of a microphone and an ear capsule is placed in a separate device outside the auditory tube, it is particularly important to have the acoustic leakage under control.

In order to be able to separate the sound components produced by various sources of noise, which components are disturbing and unnecessary from the point of view of the intelligibility and clearness of the user's speech and in order to be able to remove them from the signal detected by the microphone in such a way that essentially just the user's voice remains, the transfer functions between the various components of the system must be known. Because the transfer function between the microphone capsule and the ear capsule is not constant, the transfer function must be monitored. Monitoring of the transfer function can be carried out e.g. through measurements based on noise. In order to improve voice quality and the intelligibility of speech, it is possible to divide the detection and reproduction of speech in various frequency bands which are processed digitally.

It is characteristic of the ear-connectable earphone unit and the terminal device arrangement according to the invention that it comprises means for eliminating sounds produced into the auditory tube by said sound reproduction means from sounds detected by said speech detection means.

It is characteristic of the terminal device according to the invention that said sound reproduction means and said speech detection means have been arranged in the terminal device close to each other in a manner for connecting both simultaneously to one and the same ear of a user, and the terminal device further comprising means for eliminating sounds produced into the auditory tube by said sound reproduction means from sounds detected by said speech detection means.

It is characteristic of the method according to the invention that disturbance caused in the ear by the first sound signal is subtracted from said second sound signal.

BRIEF DESCRIPTION OF THE DRAWINGS

The invention is described in detail in the following with reference to enclosed figures, of which

FIG. **1** presents both the components of the earphone unit according to the invention and its location in the auditory tube,

FIGS. **2**A and **2**B present various ways of placing, in relation to each other, the microphones and the ear capsule used in the earphone unit according to the invention,

FIG. **2**C presents the realization of the earphone unit according to the invention utilizing a dynamic ear capsule,

FIG. **3** presents as a block diagram separating the sounds produced by the ear capsule and sounds produced by external noise from a detected microphone signal,

FIG. **4** presents as a block diagram the components and connections of an earphone unit according to the invention,

FIG. **5** presents the digital shift register equipped with feed-back used for forming an MLS-signal,

FIG. **6** presents as a block diagram determining the transfer function between a microphone and an ear capsule,

FIG. **7** presents the band limiting frequencies used in an embodiment according to he invention,

FIG. **8** presents microphone signal detected in the auditory tube at frequency level,

FIG. **9** presents band-limited microphone signal detected in the auditory tube at frequency level,

FIG. **10** presents band-limited microphone signal detected in the auditory tube at frequency level, in which the missing frequency bands have been predicted,

FIGS. **11**A and **11**B present a mobile station according to the invention,

FIGS. **12** and **13** present mobile station arrangements according to the invention, and

FIG. **14** presents the blocks of digital signal processing carried out in the earphone unit according to the invention.

DETAILED DESCRIPTION

In the following the invention is explained based upon an embodiment. FIG. **1** presents earphone unit **11** according to the invention, which makes it possible to place microphone capsule **13** and ear capsule **12** in same auditory tube **10**. Error microphone **14** is located on the outer surface of earphone unit **11**. Earphone unit **11** has been given such a form that intrusion of external noise **17'** into auditory tube **10** has been prevented as efficiently as possible. External noise **17'** consists of e.g. noise produced by working machinery and speech of persons nearby. The source of noise is in FIG. **1** represented by block **17** and the sound advancing from source of noise **17** directly to error microphone **14** is presented with reference **17"**. The advantage of earphone unit **11** is its small size and its suitability for noisy environment.

Microphone capsule **13** and ear capsule **12** can be physically located in relation to each other in a number of ways. FIGS. **2**A and **2**B present alternative placing of microphone capsule **13**, error microphone **14** and ear capsule **12**, and FIG. **2**C presents utilizing of dynamic ear capsule **150** as both microphone capsule **13** and ear capsule **12**. In FIG. **2**A microphone capsule **13** has as an example been placed in front of ear capsule **12** close to acoustic axis **142**. It is possible to integrate microphone capsule **13** in the body of ear capsule **12**, or it can be mounted using supports **141**. Arrow **12'** presents sound emitted by ear capsule **12**.

FIG. **2**B presents a solution in which ear capsule **12** has been installed in the other, auditory tube **10** side, end of earphone unit **11**. Ear capsule **12** is integrated in the body of earphone unit **11** e.g. using supports **144**. Slots or apertures **145** have been arranged between the housing of earphone unit **11** and supports **144** to the otherwise closed microphone chamber in which microphone capsule **13** has been placed. Microphone capsule **13** is integrated in the body of earphone unit **11** or fixed solidly on e.g. supports **146**. Space **148** has been arranged behind microphone chamber **147** for electric components required by earphone unit **11**, such as processor **34**, amplifiers and A/D and D/A-converters (FIG. **4**). Error microphone **14** which has an acoustic connection to noise **17"** arriving from the source of noise **17** has been placed in space **149** in the end of earphone unit **11** opposite to ear capsule **12**.

FIG. **2**C presents an embodiment of earphone unit **11**, in which separate ear capsule **12** and microphone capsule **13** have been replaced with dynamic ear capsule **150** which is capable of acting simultaneously as a sound reproducing and

receiving component. It is possible to use instead of dynamic ear capsules **150** e.g. a piezoelectric converters, which have been described in more detail in publication Anderson, E. H. and Hagood, N. W. 1994 Simultaneous piezoelectric sensing/actuation: analysis and applications to controlled structures, Journal of Sound and Vibration, vol 174, 617–639. The solution of integrating ear capsule **12** and microphone capsule **13** preferably reduces the need for space of earphone unit **11**. Such a construction is also simpler in its mechanical realization. It is also possible to use in the earphone unit **11** according to the invention other ways of placing and realizing microphones **13** and **14** and ear capsule **12**, different in their realization.

The human speech is generated in the larynx **20** (FIG. **1**) in the upper end of the windpipe, in which the vocal cords **15** are situated. From the vocal cords **15** the speech is transferred through the Eustachian tube connecting the throat and the middle ear to the eardrum **16**. Also connected to the eardrum **16** are the auditory ossicles (not shown in the figure) in the middle ear, over which the sound is forwarded into the inner ear (not shown in the figure) where the sensing of sound takes place. The yibrations of the eardrum **16** relays the speech through the auditory tube **10** to the microphone capsule **13** in the auditory tube **10** end of earphone unit **11**. When speech is transferred to the user of earphone unit **11** over ear capsule **12**, this speech is sensed by the eardrum **16**.

In FIG. **3**, block **24** illustrates sound signals received by microphone capsule **13**. They consist of three components: speech signal **15'** originated in the vocal cords, ear capsule signal **12'** reproduced by ear capsule **12** in the auditory tube **10** and noise signal **17"** caused by external sources of noise **17**. In order to be able to detect the desired speech signal **15'** in the auditory tube **10** in the best possible way, signals **12'** and **17'**, which are disturbing from the point of view of speech signal **15'**, are strived to be eliminated e.g. in two different stages. In the first stage ear capsule signal **12'** generated by ear capsule **12** in the auditory tube **10** is removed in block **24**. Because the original electric initiator of ear capsule signal **12'** is known, it can be subtracted from the signal received by microphone capsule **13** using subtractor **25** provided that the transfer function between ear capsule **12** and microphone capsule **13** is known. Because the transfer function between error microphone **14** and microphone capsule **13** is essentially constant, noise signal **17'** can be subtracted in second stage **25** using subtractor **27** using a method which is explained later.

The transfer function between ear capsule **12** and microphone capsule **13** is determined e.g. using so-called MLS (Maximum Length Sequence)-signal. In this method a known MLS-signal is fed into the auditory tube **10** with ear capsule **12**, the response caused by which signal is measured with microphone capsule **13**. This measuring is executed preferably at such discrete moments when no other information is transferred to the user over ear capsule **12**. In principle it is possible to use any sound signal as the known measuring sound signal, but it is nice from the user's point of view to use e.g. the MLS-signal resembling using a generator **50** (FIG. **5**) which generates binary, seemingly random sequences (pseudo-random sequence generator), which generator is realized digitally in processor **34** (FIG. **4**) in earphone unit **11**. FIG. **5** presents the realization of generator **50** using a n-stage shift register. Output **53** of the generator is, with suitably selected feed-backs **51** and **52**, binary sequences repeated identically at certain intervals. The sequences are fed to D/A-converter **33** (FIG. **4**), and from there further to amplifier **32** and ear capsule **12**. The repeating frequency of the sequences depends on the number of stages n of the generator and on the choice of feed-back **51** and **52**. The longest possible sequence available using n-stage generator **50** has the length of 2^n-1 bits. For example a 64-stage generator can produce a sequence which is repeated identical only after 600,000 years when 1 MHz clock frequency is used. It is prior known to a person skilled in the art that such long sequences are generally used to simulate real random noise.

FIG. **6** presents determining the transfer function. Ear capsule **12** is used to feed a known signal f(t) into the auditory tube **10** and the signal is detected using microphone capsule **13**. Processor **34** saves the supplied signal f(t) in memory **37**. In auditory tube **10** signal f(t) is transformed due to the effect of impulse response h(t) (ref. **56**) into form h(t)*f(t). Through microphone capsule **13** and amplifier **30** signal h(t)*f(t) is directed to A/D-converter **31** and saved in memory **37**. Signal h(t)*f(t) is a convolution of the supplied signal f(t) and the system impulse response h(t) (ref. **56**). Convolution has been described e.g. in Erwin Kreyszig's book Advanced Engineering Mathematics, sixth edition, page 271 (Convolution theorem). The system impulse response h(t) is determined by calculating the cross-correlation, prior known to persons skilled in the art, of the supplied signal f(t) and the received signal h(t)*f(t). Impulse response h(t) in time space can be converted into the form in frequency space e.g. using FFT (Fast Fourier Transform)-transform **58**, resulting in system transfer function H(ω). Relatively low signal to noise ratio (SNR) will be sufficient for a successful measuring. The accuracy of the impulse response can, in addition to increasing the SNR, be improved through averaging. In preferable conditions the user will not detect the determining of the impulse response at all.

A microphone signal contains the following sound components:

$$m(t)=x(t)+y(t)+z(t) \tag{1}$$

in which

m(t) is the sound signal received by microphone capsule **13**

x(t) is desired speech signal **15'**

y(t) is ear capsule signal **12'** detected by microphone capsule **13**

z(t) is external noise signal **17'** detected by microphone capsule **13**.

Because the speech signal x(t) transferred by eardrum **16** is wanted to be solved, the share of ear capsule **12** and of external noise **17** must be subtracted from the microphone signal. In this case equation (1) can be rewritten in form:

$$x(t)=m(t)-y(t)-z(t). \tag{2}$$

Sound component y(t) detected by microphone capsule **13** can be written, utilizing the original known electric signal y'(t) supplied to the ear capsule and the determined impulse response h(t) as follows:

$$y(t)=h(t)*y'(t) \tag{3}$$

By substituting equation (3) into equation (2) it is obtained:

$$x(t)=m(t)-h(t)*y'(t)-z(t) \tag{4}$$

Error microphone **14** is used to compensate for external signal z(t). Error microphone **14** measures external noise z'(t) which is used as a reference signal. When external noise

z'(t) reaches microphone capsule **13** it is transformed in a way determined by acoustic transfer function K(ω) between the microphones. Transfer function K(ω) and its equivalent k(t) in time space can be determined most preferably in the manufacturing stage of earphone unit **11**, because the coupling between microphones **13** and **14** is constant due to the construction of earphone unit **11**. In this case z(t) can be written, using reference signal z'(t) and impulse response k(t) between the microphones as follows:

$$z(t)=k(t)*z'(t) \quad (5)$$

By substituting equation (5) into equation (4), by processing the microphone signal m(t) according to which the desired user's speech signal can be detected:

$$x(t)=m(t)-h(t)*y'(t)-k(t)*z'(t) \quad (6)$$

A filter is required for compensating external signal z(t), which filter realizes impulse response k(t). The filter can be constructed using discrete components, but preferably it is realized digitally in processor **34**. Even traditional adaptive echo canceling algorithms can be used for estimating signals y(t) and z(t).

The acoustic coupling between microphone capsule **13** and error microphone **14** can be determined also during the operation of the device. This can be carried out by comparing the microphone signals m(t) and z'(t). When signal y'(t) is 0 and such a moment is found when the user of the device is not speaking, also x(t) is 0. In this case the remaining m(t) is essentially convolution k(t)*z'(t). Transfer function K(ω) can be determined from the division ratio of frequency space simply:

$$M(\omega)/Z'(\omega)=K(\omega)Z'(\omega)/Z'(\omega)=K(\omega) \quad (7)$$

Finally, the transfer function can be converted into the impulse response k(t) of time space using inverse Fourier-transform. This operation can be used e.g. for determining the acoustic leak of earphone unit **11** or as a help to speech synthesis e.g. when editing a user's speech.

When detected in the auditory tube **10**, human speech is somewhat distorted, because typically high frequencies are more attenuated in the auditory tube **10**.

By comparing in environment with little or preferably no noise at all, the differences between speech signals from microphone capsule **13** detecting speech in the auditory tube **10** and speech signals received by external error microphone **14**, it is possible to determine the transfer function directed at the speech signal by the auditory tube utilizing e.g. the above described method. Based upon determining the transfer function it is possible to realize in processor **34** a filter which can be used for compensating the distortion in the speech signal caused by the auditory tube. In this case a better voice quality is obtained.

In environment with little noise external error microphone **14** can be used even in stead of main microphone **13**. It is possible to realize the choice between microphones **13** and **14** e.g. by comparing the amplitude levels of the microphone signals. In addition to this the microphone signals can be analyzed e.g. using a speech detector (VAD, Voice-Activity Detection) and further through correlation calculation, with which one can confirm that signal z'(t) arriving in error microphone **14** has sufficient resemblance with the processed signal x(t). These actions can be used for preventing noise of nearby machinery or other corresponding source of noise and speech of nearby persons from passing on after the processor. When error microphone **14** is used instead of microphone capsule **13** it is possible to obtain better voice quality in conditions with little noise.

FIG. **4** presents in more detail the internal construction of earphone unit **11**. The signals from microphone capsule **13** and error microphone **14** are amplified in amplifiers **30** and **36** after which they are directed through A/D-converters **31** and **35** to processor **34**. When speech signal or MLS-signal from generator **50** is transferred to the user's auditory tube **10** they are transferred through D/A-converter **33** and amplifier **32** to ear capsule **12**. Program codes executed by processor **34** are stored in memory **37**, which is used by processor **34** also for storing e.g. the interim data required for determining impulse response h(t). Controller **38**, which typically is a microprocessor, the required A/D- and D/A-converters **39** and processor **34** with memory **37** convert both the incoming and outgoing speech into the form required by transfer path **40**. Transfer of speech into both directions can be carried out in either analogue or digital form to either external terminal device **121** (FIG. **13**) or device **100**, **110** (FIGS. **11**A, **11**B and **12**) built in connection with earphone unit **11**. The required A/D- and D/A-conversions are executed with converter **39**. Also the power supply to earphone unit **11** can be carried out over transfer path **40**. If earphone unit **11** has been designed for wireless operation, the required means of transmitting and receiving **111**, **113** (FIG. **12**A) and the power supply (e.g. a battery, not shown in the figure) are placed e.g. in the ear-mounted part.

If both the user of earphone unit **11** and his speaking partner are talking simultaneously, a so-called "double-talk" situation occurs. In the traditional "double-talk" detection of mobile telephones speech detectors are used in both the channel which transfers speech from the user to the mobile communication network (up-link) and in the channel which receives speech from the mobile communication network (down-link). When the speech detectors of both channels indicate that the channels indicate speech, the teaching of the adaptive echo cancellator is temporarily interrupted and its settings are saved. This state can be continued as long as the situation is stable, after which the attenuating of the microphone channel is started. Interrupting the teaching of the echo cancellator is possible because the eventual error is at least in the beginning lower than the up-link and down-link signals. In case of earphone unit **11** the traditional detection of "double talk" cannot be applied without problems, because a smallest error in determining impulse response h(t) will produce.an error which is of the same order than original signal x(t). In principle the problems arising could be avoided by giving priority to information transferred to one of the directions, but this solution is not attractive from the user's point of view. In this case users would experience interruptions or high attenuation in speech transfer. A better solution is achieved by striving for as good as possible separation of signals transferred to different directions.

FIG. **14** presents an embodiment in which microphone signal **13**" and ear capsule signal **12**" transferred to different directions are separated from each other using band-pass filters **132**, **133**, **134** and **137**. The band-pass filters divide the speech band into sub-bands (references **61**–**68**, FIGS. **7**–**10**), in which case ear capsule **12** can be run on part of the sub-bands and the signal from microphone capsule **13** is correspondingly forwarded only on sub-bands which remain free. FIG. **7** presents an example of sub-bands, in which speech signal is transferred to both directions on three different frequency bands. In telephone systems the speech band is typically 300 to 3400 Hz. Out of the signal from microphone capsule **13** in this case frequency bands 300 to 700 Hz, 1.3 to 1.9 kHz and 2.4 to 3.0 kHz, or sub-bands **62**, **64** and **66**, are utilized directly. The signal repeated by ear capsule **12** contains correspondingly frequency bands 700

Hz to 1.3 kHz, 1.9 to 2.4 kHz and 3.0 to 3.4 kHz, or sub-bands **63**, **65** and **67**. In traditional mobile telephone communication frequency bands below 300 Hz (reference **61**) and higher than 3.4 kHz (reference **68**) are not used. The number of sub-bands has not been limited for reasons of principle, but to the more sub-bands the frequency range in use is divided, the better voice quality is obtained. As a counterweight to this the required processing capacity increases.

The above described utilizing of sub-bands needs preferably not to be done in other than "double-talk" situations, which are detected using detector **131** (FIG. **14**). When a "double-talk" situation is detected, band limiting is started using band-pass filters **132**, **133**, **134** and **137**, the last of which comprises three separate filters for the signal from ear capsule **12**. When speech communication is unidirectional again, the band limiting is stopped, in which situation signal **13**" from microphone capsule **13** is connected directly to controller **38** and ear capsule signal **12**" directly from controller **38** to ear capsule **12**.

Digital signal processing enables improving speech quality during band limiting. The contents of the missing sub-bands can be predicted based upon adjacent sub-bands. This is realized e.g. in frequency level by generating the energy spectrum of a missing sub-band based upon the energy spectrum of the limiting frequency of the previous and the next known sub-band. Generating of the missing sub-bands can be carried out e.g. using curve adaptation of first or higher degree prior known to persons skilled in the art. Even with simple prediction methods, such as curve adaptation of first degree, in most situations a better voice quality is obtained compared to only band limited signal, although due to the far advanced human auditory sense speech signal is intelligible even without predicting the missing sub-bands. The predicting has been described in more detail in connection with the explanation of FIGS. **8** to **10**. The predicting is realized using predictor **136** (FIG. **14**) in the transmitting end. Band-pass filters **132**, **133** and **134** and summing unit **135** are used in connection with the predicting.

FIG. **8** presents signal **70** in frequency level as measured by microphone capsule **13** in auditory tube **10**. The measuring band is wider than speech band 300 to 3400 Hz and accordingly signal **70** contains also frequency components under 300 Hz and over 3.4 kHz. In FIGS. **7** to **10** it is assumed that double-talk indicator **131** has detected a situation in which both the user of earphone unit **11** and his talking partner are speaking, due to which band limiting is on. FIG. **9** presents microphone signal **70** in frequency space, limited to sub-bands **62**, **64** and **66**, which signal in its new form consists of three separate components **81**, **82** and **83** of the frequency space. If no kind of predicting of the missing sub-bands **63**, **65** and **67** is carried out, band limited microphone signal **70** in frequency space looks like in FIG. **9** also in the receiving end, containing components **81**, **82** and **83**. In this case the speech signal is badly distorted because e.g. frequency peak **70**' (FIG. **10**) contained in band **63** is missing totally. In spite of this components **81**, **82** and **83** form an understandable whole, because a human being is capable of understanding even a very distorted and imperfect speech signal.

In FIG. **10**, a curve adaptation of first degree has been adapted between signal components **81**, **82** and **83** of FIG. **9**, in which in all simplicity a straight line has been placed over the missing sub-bands. For example, straight line **91** is adjusted between the higher limit frequency (700 Hz) of sub-band **81** and the lower limit frequency (1.3 kHz) of sub-band **82**, which gives the contents of sub-band **63**. With corresponding predicting prediction **92** is obtained for sub-band **65** and prediction **93** for area **67**. Let it be noticed that in order to obtain prediction **93** for area **67**, it is also possible for predicting to use a frequency range higher than 3.4 kHz, even if it would be filtered away at a later stage. Correspondingly, sub-band **61** or lower than 300 Hz can be used, although it contains sounds of the human body, such as heartbeats and sounds of breathing and swallowing. The predicted, previously missing signal components **91**, **92** and **93** are generated utilizing processor **34** and controller **38** before transferring to A/D- and D/A-converter **39** and transfer path **40**.

In the above simple predicting of frequency bands in the frequency level more complicated methods of predicting can be used, in which e.g. the first and/or second derivate of microphone signal **70** are taken in account, or statistical analysis of microphone signal **70** can be carried out, in which case remarkably better estimates of the missing sub-bands can be obtained. With this method it is possible to obtain e.g. for frequency peak **70**' in block **63** a prediction which is remarkably better than the now obtained prediction **91**. Predicting of the missing bands requires however processing capacity the availability of which in most cases is limited. In this case one has to seek for a compromise between speech quality and the signal processing to be carried out.

FIGS. **11**A and **11**B present another embodiment of earphone unit **11** according to the invention. In this embodiment earphone unit **11** has been integrated in connection with mobile station **100**. Differently from a traditional mobile station, both ear capsule **12** and microphone capsule **13** have been placed in the same end of mobile station **100**. Protective element **106** made of soft and elastic material, e.g. rubber, has been arranged in connection with ear capsule **12** and microphone capsule **13**. The important function of the element is to prevent external noise **17**' form entering the auditory tube **10** when mobile station **100** is lifted on ear **18** in operating position. Error microphone **14** used for eliminating external noise **17**' has been placed in the side edge of mobile station **100**. Because ear capsule **12** and microphone capsule **13** are placed next to each other, the distance between the human ear and mouth does not limit the dimensioning of mobile station **100**, in which case mobile station **100** can be realized in even very small size. Limitations for the mechanical realization of mobile station **100** are set mainly by display **101**, menu keys **102** and numeric keys **103**, unless they are replaced with e.g. a speech-controlled user interface.

FIG. **12** presents another application example of earphone unit **11** according to the invention. In this application example simplified mobile station **111** with antenna **113** has been arranged in connection with earphone unit **11**. Simplified mobile station **111** comprises a typical mobile station, e.g. a GSM mobile telephone, the typical radio parts prior known to persons skilled in the art and other parts of signal processing, such as the parts for handling the baseband signal for establishing a wireless radio connection to a base station (not shown in the figure). Differently from a traditional mobile station, part of user interface **101**, **102**, **103** has been placed in separate controller **118**. Controller **118** can resemble a traditional mobile station or e.g. an infrared controller prior known from television apparatuses. It comprises display **101**, menu keys **102**, and numeric keys **103**. It further comprises transceiver **115**. Transceiver **115** has been arranged to transfer, e.g. in the infrared range, information between controller **118** and transceiver **114** arranged in connection with earphone unit **11** in order to control the

operation of mobile station **111**. Wireless mobile station **110**, consisting of earphone unit **11** according to the invention, simplified mobile station **111** and transceiver **114**, can using controller **118** operate preferably as a wireless mobile station mounted in one ear. The signal processing required for reducing the size of earphone unit **11**, such as predicting missing frequency bands, can also be realized in processing means **117** arranged in controller **118**.

FIG. **13** presents mobile station system **120**, which consists of earphone unit **11** according to the invention and traditional mobile station **121**. Earphone unit **11** is connected to mobile station **121** using e.g. connection cable **40**. Connection cable **40** is used for transferring speech signals in electric form from earphone unit **11** to mobile station **121** and vice versa in either analogue or digital form. In the solution in FIG. **13** it is possible to use earphone unit **11** for enabling the so called "hands-free" function. In traditional "hands-free" solutions a separate microphone has been needed, placed e.g. in connection with connection cable **40**, but by using earphone unit **11** according to the invention a separate microphone is preferably not needed. Due to this "hands-free" function can be provided wirelessly using transceivers **114**, **115** shown in FIG. **12**, instead of connection cable **40**, in earphone unit **11** and mobile station **121**. Processing means **34**, **37**, **38** essential for the operation of earphone unit **11** can be placed either in earphone unit **11** itself, or preferably the functions are carried out in processing means **122** of mobile station **121**, in which case it is possible to realize earphone unit **11** in very small size and at low manufacturing cost. If desired, processing means **34**, **37**, **38**, **39** can also be placed in connector **123** of connection cable **40**. In this case it is possible to connect earphone unit **11** with special connection cable **40** to a standard mobile station, in which specific processing means **122** are not needed.

The above is a description of the realization of the invention and its embodiments utilizing examples. It is self evident to persons skilled in the art that the invention is not limited to the details of the above presented examples and that the invention can be realized also in other embodiments without deviating from the characteristics of the invention. The presented embodiments should be regarded as illustrating but not limiting. Thus the possibilities to realize and use the invention are limited only by the enclosed claims. Thus different embodiments of the invention specified by the claims, also equivalent embodiments, are included in the scope of the invention.

What is claimed is:

1. An earphone unit to be connected to an ear, comprising sound reproduction means for converting an electric signal into an acoustic signal and for transferring it further into the auditory tube of the user of the earphone unit, and speech detection means for detecting the speech of the user of the earphone unit from the user's said same auditory tube, wherein it comprises means for determining an impulse response between said sound reproduction means and said speech detection means, means for separating sound signals produced into the auditory tube by said sound reproduction means from sound signals detected by said speech detection means based on said impulse response, and means for eliminating sound signals produced into the auditory tube by said sound reproduction means from sound signals detected by said speech detection means.

2. An earphone unit according to claim **1**, wherein it further comprises means for eliminating external noise from sounds detected by said speech detection means.

3. An earphone unit according to claim **1**, wherein it further comprises means for dividing the frequency band utilized by sound signals produced by said sound reproduction means and sound signals detected by said speech detection means into at least two parts.

4. An earphone unit according to claim **3**, wherein it further comprises predicting means for predicting missing frequency bands created in connection with said division of frequency bands.

5. An earphone unit according to claim **1**, wherein the sound reproduction means for converting an electric signal into an acoustic signal comprises one microphone transducer.

6. An earphone unit according to claim **1**, wherein the speech detection means for detecting the speech of the user of the earphone comprises one microphone transducer.

7. A terminal device arrangement which comprises a terminal device which terminal device comprises

means for two-way transfer of messages, and

a separate earphone unit connected to an ear, which earphone unit comprises

sound reproduction means for converting an electric signal into an acoustic sound signal and forwarding it into the auditory tube of the user of the earphone unit, and

speech detection means for detecting the speech of the user of the earphone unit from said same auditory tube of the user, wherein it comprises means for determining an impulse response between said sound reproduction means and said speech detection means, means for separating sound signals produced into the auditory tube by said sound reproduction means from sound signals detected by said speech detection means based on said impulse response, and means for eliminating sound signals produced into the auditory tube by said sound reproduction means from sound signals detected by said speech detection means.

8. A terminal device which comprises means for two-way transfer of messages, sound reproduction means for converting an electric signal into an acoustic sound signal and forwarding it into the auditory tube of the user of the terminal device, and speech detection means for detecting speech, wherein said sound reproduction means and said speech detection means have been arranged in the terminal device close to each other in a manner for connecting both simultaneously to one and the same ear of a user, and the terminal device further comprising means for determining an impulse response between said sound reproduction means and said speech detection means, means for separating sound signals produced into the auditory tube by said sound reproduction means from sound signals detected by said speech detection means based on said impulse response, and means for eliminating sound signals produced into the auditory tube by said sound reproduction means from sound signals detected by said speech detection means.

9. A terminal device according to claim **8**, wherein part of the user interface of the terminal device has been placed in a separate controller and that said controller and terminal device have been arranged to transfer information between each other utilizing at least one of the following communication methods: telecommunication connection by wire and wireless telecommunication connection.

10. A method of reproducing voice in a person's ear, said method comprising the steps of:

placing a transducer unit in or at the person's ear,

transferring a speaker signal into the person's ear by the transducer unit;

a speech signal of the person being conducted inside the head from the person's vocal cords to the person's

auditory tubes via the person's bone and soft tissue structure in response to speech of the person;

detecting a sound signal in or at the person's ear by the transducer unit, said sound signal comprising said speech signal and said speaker signal; and

subtracting said transferred speaker signal from said sound signal.

11. A method according to claim **10** further including the steps of:

detecting a noise signal by a second microphone positioned to receive said signal from an external source; and

subtracting said noise signal from said sound signal in order to improve detection of the speech signal.

12. A method according to claim **10** wherein when the speaker signal is transferred into the person's ear the speaker signal is transferred into the same ear as the ear in which the sound signal is detected.

13. An earphone unit to be connected to an ear, comprising:

sound reproduction means for converting an electric signal into an acoustic signal and for transferring it further into the auditory tube of the user of the earphone unit; and

speech detection means for detecting the speech of the user of the earphone unit from the user's said same auditory tube, wherein it comprises:

means for determining an impulse response between said sound reproduction means and said speech detection means;

means for separating sound signals produced into the auditory tube by said sound reproduction means from sound signals detected by said speech detection means based on said impulse response;

means for eliminating sound signals produced into the auditory tube by said sound reproduction means from sound signals detected by said speech detection means;

means for dividing the frequency band utilised by sound signals produced by said sound reproduction means and sound signals detected by said speech detection means into at least two parts; and

predicting means for predicting missing frequency bands created in connection with said division of frequency bands.

* * * * *