U.S. PTO
12/070742
02/20/2008

PTO/SB/05 (07-07)
Approved for use through 06/30/2010. OMB 0651-0032
U.S. Patent and Trademark Office. U.S. DEPARTMENT OF COMMERCE

Under the Paperwork Reduction Act of 1995, no persons are required to respond to a collection of information unless it displays a valid OMB control number.

022008

01576 U.S. PTO

UTILITY PATENT APPLICATION TRANSMITTAL

(Only for new nonprovisional applications under 37 C.F.R. 1.53(b))

Attorney Docket No.	10031.004200
First Inventor	Peter John Cousins
Title	Front Contact Solar Cell With Formed Emitter
Express Mail Label No.	EM 142856406 US

APPLICATION ELEMENTS

See MPEP chapter 600 concerning utility patent application contents.

1. ☒ **Fee Transmittal Form (e.g., PTO/SB/17)**
   (Submit an original and a duplicate for fee processing)
2. ☐ **Applicant claims small entity status.** See 37 CFR 1.27.
3. ☒ **Specification** [*Total Pages* 16]
   Both the claims and abstract must start on a new page
   (For information on the preferred arrangement, see MPEP 608.01(a))
4. ☒ **Drawing(s)** (*35 U.S.C. 113*) [*Total Sheets* 7]
5. **Oath or Declaration** [*Total Sheets* 2]
   a. ☒ Newly executed (original or copy)
   b. ☐ Copy from a prior application (37 CFR 1.63 (d))
   (for a continuation/divisional with Box 18 completed)
   i. ☐ DELETION OF INVENTOR(S)
   Signed statement attached deleting inventor(s) named in the prior application, see 37 CFR 1.63(d)(2) and 1.33(b).
6. ☐ **Application Data Sheet.** See 37 CFR 1.76
7. ☐ **CD-ROM or CD-R** in duplicate, large table or Computer Program *(Appendix)*
   ☐ Landscape Table on CD
8. **Nucleotide and/or Amino Acid Sequence Submission**
   (if applicable, items a.-c. are required)
   a. Computer Readable Form (CRF)
      i. ☐ Computer Readable Form (CRF)
      ii. ☐ Transfer Request (37 CFR 1.821(e))
   b. Specification Sequence Listing on:
      i. ☐ CD-ROM or CD-R (2 copies); or
      ii. ☐ Paper
   c. ☐ Statements verifying identity of above copies

ADDRESS TO: **Commissioner for Patents**
P.O. Box 1450
Alexandria VA 22313-1450

ACCOMPANYING APPLICATIONS PARTS

9. ☒ **Assignment Papers** (cover sheet & document(s))
   Name of Assignee _____
10. ☐ **37 C.F.R. 3.73(b) Statement** *(when there is an assignee)* ☒ **Power of Attorney**
11. ☐ **English Translation Document** *(if applicable)*
12. ☐ **Information Disclosure Statement** (PTO/SB/08 or PTO-1449)
    ☐ Copies of citations attached
13. ☐ **Preliminary Amendment**
14. ☒ **Return Receipt Postcard** (MPEP 503)
    (Should be specifically itemized)
15. ☐ **Certified Copy of Priority Document(s)**
    (if foreign priority is claimed)
16. ☒ **Nonpublication Request** under 35 U.S.C. 122(b)(2)(B)(i). Applicant must attach form PTO/SB/35 or equivalent.
17. ☐ Other: _____

18. If a CONTINUING APPLICATION, *check appropriate box, and supply the requisite information below and in the first sentence of the specification following the title, or in an Application Data Sheet under 37 CFR 1.76:*
☐ Continuation ☐ Divisional ☐ Continuation-in-part (CIP) of prior application No: _____ / _____
Prior application information: *Examiner* _____ *Art Unit:* _____

19. CORRESPONDENCE ADDRESS

☒ The address associated with Customer Number **000074254** *OR* ☐ Correspondence address below

Name					
Address					
City		*State*		*Zip Code*	
Country		*Telephone*		*Email address*	

Signature	Patrick Benedicto	Date	February 20, 2008
Name (Print/Type)	Patrick D. Benedicto	*Registration No. (Attorney/Agent)*	40,909

This collection of information is required by 37 CFR 1.53(b). The information is required to obtain or retain a benefit by the public which is to file (and by the USPTO to process) an application. Confidentiality is governed by 35 U.S.C. 122 and 37 CFR 1.11 and 1.14. This collection is estimated to take 12 minutes to complete, including gathering, preparing, and submitting the completed application form to the USPTO. Time will vary depending upon the individual case. Any comments on the amount of time you require to complete this form and/or suggestions for reducing this burden, should be sent to the Chief Information Officer, U.S. Patent and Trademark Office, U.S. Department of Commerce, P.O. Box 1450, Alexandria, VA 22313-1450. DO NOT SEND FEES OR COMPLETED FORMS TO THIS ADDRESS. **SEND TO: Mail Stop Patent Application, Commissioner for Patents, P.O. Box 1450, Alexandria, VA 22313-1450.**
If you need assistance in completing the form, call 1-800-PTO-9199 and select option 2.

PTO/SB/17 (07-07)
Approved for use through 06/30/2010. OMB 0651-0032
U.S. Patent and Trademark Office: U.S. DEPARTMENT OF COMMERCE
Under the Paperwork Reduction Act of 1995, no persons are required to respond to a collection of information unless it displays a valid OMB control number.

022008 01/76 U.S. PTO

Effective on 12/08/2004.
Fees pursuant to the Consolidated Appropriations Act, 2005 (H.R. 4818).

FEE TRANSMITTAL for FY 2008

☐ Applicant claims small entity status. See 37 CFR 1.27

TOTAL AMOUNT OF PAYMENT ($) 1070.00

Complete if Known	
Application Number	
Filing Date	February 20, 2008
First Named Inventor	Peter John Cousins
Examiner Name	unknown
Art Unit	unknown
Attorney Docket No.	10031.004200

METHOD OF PAYMENT (check all that apply)

☒ Check ☐ Credit Card ☐ Money Order ☐ None ☐ Other (please identify) : _____

☒ Deposit Account Deposit Account Number: 50-2427 Deposit Account Name: Okamoto & Benedicto LLP

For the above-identified deposit account, the Director is hereby authorized to: (check all that apply)

☐ Charge fee(s) indicated below ☐ Charge fee(s) indicated below, **except for the filing fee**

☒ Charge any additional fee(s) or underpayments of fee(s) Under 37 CFR 1.16 and 1.17 ☒ Credit any overpayments

WARNING: Information on this form may become public. Credit card information should not be included on this form. Provide credit card information and authorization on PTO-2038.

FEE CALCULATION

1. BASIC FILING, SEARCH, AND EXAMINATION FEES

	FILING FEES		SEARCH FEES		EXAMINATION FEES		
		Small Entity		Small Entity		Small Entity	
Application Type	Fee ($)	Fee($)	Fee($)	Fee($)	Fee($)	Fee($)	Fees Paid ($)
Utility	310	155	510	255	210	105	1030
Design	210	105	100	50	130	65	____
Plant	210	105	310	155	160	80	____
Reissue	310	155	510	255	620	310	____
Provisional	210	105	0	0	0	0	____

2. EXCESS CLAIM FEES

Fee Description	Fee ($)	Small Entity Fee ($)
Each claim over 20 (including Reissues)	50	25
Each independent claim over 3 (including Reissues)	210	105
Multiple dependent claims	370	185

Total Claims		Extra Claims		Fee($)		Fee Paid ($)
20	-20 or HP=	____	x	____	=	____

HP = highest number of total claims paid for, if greater than 20.

Indep. Claims		Extra Claims		Fee($)		Fee Paid ($)
3	- 3 or HP=	____	x	____	=	____

HP = highest number of independent claims paid for, if greater than 3.

Multiple Dependent Claims	
Fee ($)	Fee Paid ($)
____	____

3. APPLICATION SIZE FEE

If the specification and drawings exceed 100 sheets of paper (excluding electronically filed sequence or computer listings under 37 CFR 1.52(e)), the application size fee due is $250 ($125 for small entity) for each additional 50 sheets or fraction thereof. See 35 U.S.C. 41(a)(1)(G) and 37 CFR 1.16(s).

Total Sheets	Extra Sheets	Number of each additional 50 or fraction thereof	Fee ($)	Fee Paid ($)
____ - 100 =	____ / 50 =	____ (round up to a whole number) x	____ =	____

4. OTHER FEE(S)

	Fees Paid ($)
Non-English Specification, $130 fee (no small entity discount)	____
Other (e.g., late filing surcharge) : Recordation of Assignment	40

SUBMITTED BY

Signature		Registration No. (Attorney/Agent)	40,909	Telephone	(408) 436-2110
Name (Print/Type)	Patrick D. Benedicto			Date	February 20, 2008

This collection of information is required by 37 CFR 1.136. The information is required to obtain or retain a benefit by the public which is to file (and by the USPTO to process) an application. Confidentiality is governed by 35 U.S.C. 122 and 37 CFR 1.14. This collection is estimated to take 30 minutes to complete, including gathering, preparing, and submitting the completed application form to the USPTO. Time will vary depending upon the individual case. Any comments on the amount of time you require to complete this form and/or suggestions for reducing this burden, should be sent to the Chief Information Officer, U.S. Patent and Trademark Office, U.S. Department of Commerce, P.O. Box 1450, Alexandria, VA 22313-1450. DO NOT SEND FEES OR COMPLETED FORMS TO THIS ADDRESS. **SEND TO: Commissioner for Patents, P.O. Box 1450, Alexandria, VA 22313-1450.**

If you need assistance in completing this form, call 1-800-PTO-9199 (1-800-786-9199) and select option 2.

U.S. PTO
12/070742
02/20/2008

PTO/SB/05 (07-07)
Approved for use through 06/30/2010. OMB 0651-0032
U.S. Patent and Trademark Office. U.S. DEPARTMENT OF COMMERCE

Under the Paperwork Reduction Act of 1995, no persons are required to respond to a collection of information unless it displays a valid OMB control number.

022008

01576 U.S. PTO

UTILITY PATENT APPLICATION TRANSMITTAL

(Only for new nonprovisional applications under 37 C.F.R. 1.53(b))

Attorney Docket No.	10031.004200
First Inventor	Peter John Cousins
Title	Front Contact Solar Cell With Formed Emitter
Express Mail Label No.	EM 142856406 US

APPLICATION ELEMENTS

See MPEP chapter 600 concerning utility patent application contents.

1. ☒ **Fee Transmittal Form (e.g., PTO/SB/17)**
   (Submit an original and a duplicate for fee processing)
2. ☐ **Applicant claims small entity status.** See 37 CFR 1.27.
3. ☒ **Specification** [*Total Pages* 16]
   Both the claims and abstract must start on a new page
   (For information on the preferred arrangement, see MPEP 608.01(a))
4. ☒ **Drawing(s)** (*35 U.S.C. 113*) [*Total Sheets* 7]
5. **Oath or Declaration** [*Total Sheets* 2]
   a. ☒ Newly executed (original or copy)
   b. ☐ Copy from a prior application (37 CFR 1.63 (d))
   (for a continuation/divisional with Box 18 completed)
   i. ☐ DELETION OF INVENTOR(S)
   Signed statement attached deleting inventor(s) named in the prior application, see 37 CFR 1.63(d)(2) and 1.33(b).
6. ☐ **Application Data Sheet.** See 37 CFR 1.76
7. ☐ **CD-ROM or CD-R** in duplicate, large table or Computer Program *(Appendix)*
   ☐ Landscape Table on CD
8. **Nucleotide and/or Amino Acid Sequence Submission**
   (if applicable, items a.-c. are required)
   a. Computer Readable Form (CRF)
      i. ☐ Computer Readable Form (CRF)
      ii. ☐ Transfer Request (37 CFR 1.821(e))
   b. Specification Sequence Listing on:
      i. ☐ CD-ROM or CD-R (2 copies); or
      ii. ☐ Paper
   c. ☐ Statements verifying identity of above copies

ADDRESS TO: **Commissioner for Patents**
P.O. Box 1450
Alexandria VA 22313-1450

ACCOMPANYING APPLICATIONS PARTS

9. ☒ **Assignment Papers** (cover sheet & document(s))
   Name of Assignee _____
10. ☐ **37 C.F.R. 3.73(b) Statement** *(when there is an assignee)* ☒ **Power of Attorney**
11. ☐ **English Translation Document** *(if applicable)*
12. ☐ **Information Disclosure Statement** (PTO/SB/08 or PTO-1449)
    ☐ Copies of citations attached
13. ☐ **Preliminary Amendment**
14. ☒ **Return Receipt Postcard** (MPEP 503)
    (Should be specifically itemized)
15. ☐ **Certified Copy of Priority Document(s)**
    (if foreign priority is claimed)
16. ☒ **Nonpublication Request** under 35 U.S.C. 122(b)(2)(B)(i). Applicant must attach form PTO/SB/35 or equivalent.
17. ☐ Other: _____

18. If a CONTINUING APPLICATION, *check appropriate box, and supply the requisite information below and in the first sentence of the specification following the title, or in an Application Data Sheet under 37 CFR 1.76:*
☐ Continuation ☐ Divisional ☐ Continuation-in-part (CIP) of prior application No: _____ / _____
Prior application information: *Examiner* _____ *Art Unit:* _____

19. CORRESPONDENCE ADDRESS

☒ The address associated with Customer Number **000074254** *OR* ☐ Correspondence address below

Name					
Address					
City		*State*		*Zip Code*	
Country		*Telephone*		*Email address*	

Signature	Patrick Benedicto	Date	February 20, 2008
Name (Print/Type)	Patrick D. Benedicto	*Registration No. (Attorney/Agent)*	40,909

This collection of information is required by 37 CFR 1.53(b). The information is required to obtain or retain a benefit by the public which is to file (and by the USPTO to process) an application. Confidentiality is governed by 35 U.S.C. 122 and 37 CFR 1.11 and 1.14. This collection is estimated to take 12 minutes to complete, including gathering, preparing, and submitting the completed application form to the USPTO. Time will vary depending upon the individual case. Any comments on the amount of time you require to complete this form and/or suggestions for reducing this burden, should be sent to the Chief Information Officer, U.S. Patent and Trademark Office, U.S. Department of Commerce, P.O. Box 1450, Alexandria, VA 22313-1450. DO NOT SEND FEES OR COMPLETED FORMS TO THIS ADDRESS. **SEND TO: Mail Stop Patent Application, Commissioner for Patents, P.O. Box 1450, Alexandria, VA 22313-1450.**
If you need assistance in completing the form, call 1-800-PTO-9199 and select option 2.

PTO/SB/17 (07-07)
Approved for use through 06/30/2010. OMB 0651-0032
U.S. Patent and Trademark Office: U.S. DEPARTMENT OF COMMERCE
Under the Paperwork Reduction Act of 1995, no persons are required to respond to a collection of information unless it displays a valid OMB control number.

022008 01/76 U.S. PTO

Effective on 12/08/2004.
Fees pursuant to the Consolidated Appropriations Act, 2005 (H.R. 4818).

FEE TRANSMITTAL for FY 2008

☐ Applicant claims small entity status. See 37 CFR 1.27

TOTAL AMOUNT OF PAYMENT ($) 1070.00

Complete if Known	
Application Number	
Filing Date	February 20, 2008
First Named Inventor	Peter John Cousins
Examiner Name	unknown
Art Unit	unknown
Attorney Docket No.	10031.004200

METHOD OF PAYMENT (check all that apply)

☒ Check ☐ Credit Card ☐ Money Order ☐ None ☐ Other (please identify) : _____

☒ Deposit Account Deposit Account Number: 50-2427 Deposit Account Name: Okamoto & Benedicto LLP

For the above-identified deposit account, the Director is hereby authorized to: (check all that apply)

☐ Charge fee(s) indicated below ☐ Charge fee(s) indicated below, **except for the filing fee**

☒ Charge any additional fee(s) or underpayments of fee(s) Under 37 CFR 1.16 and 1.17 ☒ Credit any overpayments

WARNING: Information on this form may become public. Credit card information should not be included on this form. Provide credit card information and authorization on PTO-2038.

FEE CALCULATION

1. BASIC FILING, SEARCH, AND EXAMINATION FEES

	FILING FEES		SEARCH FEES		EXAMINATION FEES		
		Small Entity		Small Entity		Small Entity	
Application Type	Fee ($)	Fee($)	Fee($)	Fee($)	Fee($)	Fee($)	Fees Paid ($)
Utility	310	155	510	255	210	105	1030
Design	210	105	100	50	130	65	____
Plant	210	105	310	155	160	80	____
Reissue	310	155	510	255	620	310	____
Provisional	210	105	0	0	0	0	____

2. EXCESS CLAIM FEES

Fee Description	Fee ($)	Small Entity Fee ($)
Each claim over 20 (including Reissues)	50	25
Each independent claim over 3 (including Reissues)	210	105
Multiple dependent claims	370	185

Total Claims		Extra Claims		Fee($)		Fee Paid ($)
20	-20 or HP=	____	x	____	=	____

HP = highest number of total claims paid for, if greater than 20.

Multiple Dependent Claims	
Fee ($)	Fee Paid ($)
____	____

Indep. Claims		Extra Claims		Fee($)		Fee Paid ($)
3	- 3 or HP=	____	x	____	=	____

HP = highest number of independent claims paid for, if greater than 3.

3. APPLICATION SIZE FEE

If the specification and drawings exceed 100 sheets of paper (excluding electronically filed sequence or computer listings under 37 CFR 1.52(e)), the application size fee due is $250 ($125 for small entity) for each additional 50 sheets or fraction thereof. See 35 U.S.C. 41(a)(1)(G) and 37 CFR 1.16(s).

Total Sheets	Extra Sheets	Number of each additional 50 or fraction thereof	Fee ($)	Fee Paid ($)
____ - 100 =	____ / 50 =	____ (round up to a whole number) x	____ =	____

4. OTHER FEE(S)

	Fees Paid ($)
Non-English Specification, $130 fee (no small entity discount)	____
Other (e.g., late filing surcharge) : Recordation of Assignment	40

SUBMITTED BY

Signature		Registration No. (Attorney/Agent)	40,909	Telephone	(408) 436-2110
Name (Print/Type)	Patrick D. Benedicto			Date	February 20, 2008

This collection of information is required by 37 CFR 1.136. The information is required to obtain or retain a benefit by the public which is to file (and by the USPTO to process) an application. Confidentiality is governed by 35 U.S.C. 122 and 37 CFR 1.14. This collection is estimated to take 30 minutes to complete, including gathering, preparing, and submitting the completed application form to the USPTO. Time will vary depending upon the individual case. Any comments on the amount of time you require to complete this form and/or suggestions for reducing this burden, should be sent to the Chief Information Officer, U.S. Patent and Trademark Office, U.S. Department of Commerce, P.O. Box 1450, Alexandria, VA 22313-1450. DO NOT SEND FEES OR COMPLETED FORMS TO THIS ADDRESS. **SEND TO: Commissioner for Patents, P.O. Box 1450, Alexandria, VA 22313-1450.**

If you need assistance in completing this form, call 1-800-PTO-9199 (1-800-786-9199) and select option 2.

FRONT CONTACT SOLAR CELL WITH FORMED EMITTER

Inventors: Peter Cousins

BACKGROUND OF THE INVENTION

1. Field of the Invention

The present invention relates generally to solar cells, and more particularly but not exclusively to solar cell fabrication processes and structures.

2. Description of the Background Art

Solar cells are well known devices for converting solar radiation to electrical energy. They may be fabricated on a semiconductor wafer using semiconductor processing technology. A solar cell includes P-type and N-type diffusion regions that form a junction. Solar radiation impinging on the solar cell creates electrons and holes that migrate to the diffusion regions, thereby creating voltage differentials between the diffusion regions. In a backside contact solar cell, both the diffusion regions and the metal contacts coupled to them are on the backside of the solar cell. The metal contacts allow an external electrical circuit to be coupled to and be powered by the solar cell.

In a front contact solar cell, at least one of the metal contacts making an electrical connection to a diffusion region is on the front side of the solar cell. The front side of the solar cell, which is opposite the backside, faces the sun during normal operation to collect solar radiation. While backside contact solar cells have an aesthetic advantage over front contact solar cells due to the absence of metal contacts on the

front side, and are thus preferred for residential applications, aesthetics is not a major requirement for power plants and other applications where power generation is the main concern. Disclosed herein are structures for a relatively efficient and cost-effective front contact solar cell and processes for manufacturing same.

SUMMARY

A bipolar solar cell includes a backside junction formed by an N-type silicon substrate and a P-type polysilicon emitter formed on the backside of the solar cell. An antireflection layer may be formed on a textured front surface of the silicon substrate. A negative polarity metal contact on the front side of the solar cell makes an electrical connection to the substrate, while a positive polarity metal contact on the backside of the solar cell makes an electrical connection to the polysilicon emitter. An external electrical circuit may be connected to the negative and positive metal contacts to be powered by the solar cell. The positive polarity metal contact may form an infrared reflecting layer with an underlying dielectric layer for increased solar radiation collection.

These and other features of the present invention will be readily apparent to persons of ordinary skill in the art upon reading the entirety of this disclosure, which includes the accompanying drawings and claims.

DESCRIPTION OF THE DRAWINGS

FIG. 1 schematically shows a cross-section of a solar cell in accordance with an embodiment of the present invention.

FIG. 2 is a plan view schematically showing the front side of the solar cell of FIG. 1.

FIG. 3 is a plan view schematically showing the backside of the solar cell of FIG. 1.

FIG. 4, which comprises FIGS. 4A-4M, schematically illustrates the fabrication of the solar cell of FIG. 1 in accordance with an embodiment of the present invention.

The use of the same reference label in different figures indicates the same or like components. The figures are not drawn to scale.

DETAILED DESCRIPTION

In the present disclosure, numerous specific details are provided, such as examples of apparatus, process parameters, materials, process steps, and structures, to provide a thorough understanding of embodiments of the invention. Persons of ordinary skill in the art will recognize, however, that the invention can be practiced without one or more of the specific details. In other instances, well-known details are not shown or described to avoid obscuring aspects of the invention.

FIG. 1 schematically shows a cross-section of a solar cell 100 in accordance with an embodiment of the present invention. The solar cell 100 has a front side where a metal contact 102 is located and a backside on a same side as the metal contact 110. The front side faces the sun during normal operation to collect solar radiation.

In the example of FIG. 1, the solar cell 100 includes a backside junction formed by a P-type doped polysilicon emitter 108 serving as a P-type diffusion region and an N-

type silicon substrate 101 servings as an N-type diffusion region. The N-type silicon substrate 101 may comprise a long lifetime (e.g., 2 to 5ms) N-type silicon wafer and may have a thickness of about 100 to 250 μm as measured from the backside surface to a tip of the textured front side surface of the substrate. The front side surface of the substrate 101 is randomly textured (labeled as 113) and includes N-type doped regions 105 and 106 formed in the substrate. The N-type doped region 105 provides low front surface recombination and improves lateral conductivity whilst not compromising the blue response of the solar cell. The region 106, which may be a phosphorus diffusion, provides low contact resistance and minimizes contact recombination. The region 106 is also referred to as an "N-dot" because, in one embodiment, it forms a dot-shape to minimize the area of heavily diffused regions on the front surface. The N-type doped region 105 may have a sheet resistance of 100 to 500 Ω/sq, whilst the n-type doped region 106 may have a sheet resistance of 10 to 50 Ω/sq.

An antireflective coating (ARC) of silicon nitride layer 103 is formed on the textured front side surface of the substrate 101. The texture front side surface and the silicon nitride layer 103 help improve solar radiation collection efficiency. A passivating oxide 124 may comprise silicon dioxide thermally grown to a thickness of about 10 to 250 Angstroms on the front side surface of the substrate 101.

In one embodiment, the polysilicon emitter 108 is formed on a tunnel oxide layer 107. The polysilicon emitter 108 may be formed by forming a layer of polysilicon using Chemical Vapor Deposition (CVD), such as Low Pressure CVD (LPCVD) or Plasma Enhanced CVD (PECVD), and thermal anneal. The polysilicon emitter 108 may have a sheet resistance of 100 Ω/sq, and a thickness of 1000 to 2000 Angstroms. The tunnel

oxide layer 107 may comprise silicon dioxide thermally grown to a thickness of about 10 to 50 Angstroms on the backside surface of the substrate 101. A metal contact 110 electrically connects to the polysilicon emitter 108 through contact holes 123 formed through a dielectric comprising a silicon dioxide layer 109. The metal contact 110 provides a positive polarity terminal to allow an external electrical circuit to be coupled to and be powered by the solar cell 100. The silicon dioxide layer 109 provides electrical isolation and allows the metal contact 110 to serve as an infrared reflecting layer for increased solar radiation collection. In one embodiment, the metal contact 110 comprises silver having a conductance of about 5-25 mΩ.cm and a thickness of about 15-35μm.

On the front side of the solar cell 100, the metal contact 102 electrically connects to the region 106 through a contact hole 120 formed through the silicon nitride layer 103. The metal contact 102 provides a negative polarity terminal to allow an external electrical circuit to be coupled to and be powered by the solar cell 100. In one embodiment, the metal contact 102 comprises silver having a sheet resistance of about 5mΩ.cm and a thickness of about 15μm. The pitch between adjacent metal contacts 102 may be about 1 to 4 mm. In one embodiment, the metal contacts 102 are spaced at 400 to 1000 μm along each metal contact 102 (see FIG. 2).

In the example of FIG. 1, the edge isolation trench 111 is formed through the silicon dioxide layer 109, the polysilicon emitter 108, and a portion of the substrate 101 to provide edge electrical isolation.

FIG. 2 is a plan view schematically showing the front side of the solar cell 100. In the example of FIG. 2, two bus bars 201 run parallel on the front side of the substrate

101. The contact holes 120, in which the metal contacts 102 are formed, may each have a diameter of about 50 to 200 μm. A plurality of metal contacts 102 is formed perpendicular to the bus bars 201. Each metal contact 102 may have a width of about 60-120μm.

FIG. 3 is a plan view schematically showing the backside of the solar cell 100. In the example of FIG. 3, two bus bars 301, which are electrically coupled to metal contacts 110, run parallel on the backside. In practice, the bus bars 201 and 301 will be electrically connected to corresponding bus bars of adjacent solar cells to form an array of solar cells.

Solar cells have gained wide acceptance among energy consumers as a viable renewable energy source. Still, to be competitive with other energy sources, a solar cell manufacturer must be able to fabricate an efficient solar cell at relatively low cost. With this goal in mind, a process for manufacturing the solar cell 100 is now discussed with reference to FIGS. 4A-4M.

FIG. 4, which comprises FIGS. 4A-4M, schematically illustrates the fabrication of the solar cell 100 in accordance with an embodiment of the present invention.

In FIG. 4A, an N-type silicon substrate 101 is prepared for processing into a solar cell by undergoing a damage etch step. The substrate 101 is in wafer form in this example, and is thus typically received with damaged surfaces due to the sawing process used by the wafer vendor to slice the substrate 101 from its ingot. The substrate 101 may be about 100 to 200 microns thick as received from the wafer vendor. In one embodiment, the damage etch step involves removal of about 10 to 20 μm from each side of the substrate 101 using a wet etch process comprising potassium

hydroxide. The damage etch step may also include cleaning of the substrate 101 to remove metal contamination.

In FIG. 4B, tunnel oxides 402 and 107 are formed on the front and back surfaces, respectively, of the substrate 101. The tunnel oxides 402 and 107 may comprise silicon dioxide thermally grown to a thickness of about 10 to 50 Angstroms on the surfaces of the N-type silicon substrate 101. A layer of polysilicon is then formed on the tunnel oxides 402 and 107 to form the polysilicon layer 401 and the polysilicon emitter 108, respectively. Each of the polysilicon layer 401 and the polysilicon emitter 108 may be formed to a thickness of about 1000 to 2000 Angstroms by CVD.

In FIG. 4C, a P-type dopant source 461 is formed on the polysilicon emitter 108. As its name implies, the P-type dopant source 461 provides a source of P-type dopants for diffusion into the polysilicon emitter 108 in a subsequent dopant drive-in step. A dielectric capping layer 462 is formed on the P-type dopant source 461 to prevent dopants from escaping from the backside of the solar cell during the drive-in step. In one embodiment, the P-type dopant source comprises BSG (borosilicate glass) deposited to a thickness of about 500 to 1000 Angstroms by atmospheric pressure CVD (APCVD) and has a dopant concentration of 5 to 10% by weight, while the capping layer 462 comprises undoped silicon dioxide formed to a thickness of about 2000 to 3000 Angstroms also by APCVD.

In FIG. 4D, the edge isolation trench 111 is formed near the edge of the substrate 101 on the backside. The trench 111 is relatively shallow (e.g., 10 μm deep into the substrate 101) and provides edge electrical isolation. In one embodiment, the trench 111 is formed by cutting through the capping layer 462, the P-type dopant source

461, the polysilicon emitter 108, the tunnel oxide 107, and into a shallow portion of the substrate 101 using a laser.

In FIG. 4E, exposed regions on the front surface of the substrate 101 is randomly textured to form the textured surface 113. In one embodiment, the front surface of the substrate 101 is textured with random pyramids using a wet etch process comprising potassium hydroxide and isopropyl alcohol.

In FIG. 4F, an N-type dopant source 412 is formed on regions of the textured surface 113 where contact holes 120 (see FIG. 1) will be subsequently formed to allow subsequently formed metal contacts 102 to electrically connect to the substrate 101. As its name implies, the N-type dopant source 412 provides a source of N-type dopants for diffusion into the front side of the substrate 101. In one embodiment, the N-type dopant source 412 is formed by inkjet printing the dopant material directly onto the substrate 101.

In one embodiment, the N-type dopant source 412 comprises silicon dioxide doped with phosphorus. Only one N-type dopant source 412 is shown in FIG. 4F for clarity of illustration. In practice, there are several dot-shaped N-type dopant sources 412, one for each region where a contact hole 120 is to be formed (see FIG. 2). This allows formation of several dot shaped N-type doped regions 106 (see FIG. 1) after a subsequently performed drive-in step now discussed with reference to FIG. 4G.

In FIG. 4G, a dopant drive-in step is performed to diffuse N-type dopants from the N-type dopant source 412 into the substrate 101 to form the N-type dope region 106, to diffuse P-type dopants from the P-type dopant source 461 to the polysilicon emitter 108, and to diffuse N-type dopants into the front side of the substrate 101 to

form the N-type doped region 105. Silicon dioxide layer 109 represents layers 461 and 462 after the drive-in step. The polysilicon emitter 108 also becomes a P-type doped layer after the drive-in step. The N-type doped region 105 may be formed by exposing the sample of FIG. 4G to phosphorus in a diffusion furnace, for example. The use of the N-type dopant source 412 allows for a more controlled and concentrated N-type diffusion to the N-type doped region 106. The thin thermal silicon dioxide layer 124 may be grown on the textured surface 113 during the drive-in process.

The drive-in step to dope the polysilicon emitter 108 on the backside and to form the N-type doped regions 105 and 106 on the front side may be formed in-situ, which in the context of the present disclosure means a single manual (i.e., by fabrication personnel) loading of the substrate 101 in a furnace or other single chamber or multi-chamber processing tool. In one embodiment, the drive-in step is performed in a diffusion furnace. The preceding sequence of steps leading to the drive-in step allows for in-situ diffusion, which advantageously helps in lowering fabrication cost.

It is to be noted that the step of using an N-type dopant source 412 to diffuse dopants into the N-type doped region 106 may be omitted in some applications. That is, in an alternative process, the formation of the N-type dopant source 412 in FIG. 4F may be omitted. In that case, the N-type doped regions 105 and 106 will be both doped by introduction of an N-type dopant in the diffusion furnace during the drive-in step. All other process steps disclosed herein remain essentially the same.

In FIG. 4H, the antireflective coating of silicon nitride layer 103 is formed over the textured surface 113 after removal of the N-type dopant source 412. Besides being an antireflective coating, the silicon nitride layer 103 also advantageously serves as a

dielectric, enabling the selective contacts to be formed on the front surface to reduce front surface recombination. The silicon nitride layer 103 may be formed to a thickness of about 450 Angstroms by PECVD, for example.

In FIG. 4I, a front contact mask 420 is formed on the silicon nitride layer 103 to create a pattern 421 defining the contact holes 120 (see FIG. 1). The mask 420 may comprise an acid resistance organic material, such as a resist, and formed using a printing process, such as screen printing or inkjet printing.

In FIG. 4J, a back contact mask 422 is formed on the silicon dioxide layer 109 to create patterns 423 defining the contact holes 123 (see FIG. 1). Similar to the mask 420, the mask 422 may comprise an organic material formed using a printing process.

In FIG. 4K, contact holes 120 and 123 are formed by removing exposed portions of the silicon nitride layer 103 and the silicon dioxide 109 in a contact etch step. In one embodiment, the contact holes 120 are formed by using a selective etch process that removes exposed portions of the silicon nitride layer 103 and stops on the substrate 101. The same etch process removes exposed portions of the silicon dioxide 109 and stops on the polysilicon emitter 108. In one embodiment, the etch process comprises a BOE (buffered oxide etch).

In FIG. 4L, the metal contact 110 is formed on the silicon dioxide layer 109 to fill the contact holes 123 and make electrical connection to the polysilicon emitter 108. The metal contact 110 may be formed using a printing process. The metal contact 110 may comprise silver, which, together with the silicon dioxide layer 109, makes an excellent backside infrared reflector. Other metals may also be used as a metal contact 110, such as aluminum, for example.

In FIG. 4M, the metal contact 120 is formed on the silicon nitride layer 103 to fill the contact holes 120 and make electrical connection to the substrate 101. The metal contact 120 may comprise silver and formed using a printing process.

Formation of the metal contacts 110 and 102 may be followed by a firing step. The firing step is applicable when using screen printed silver paste as metal contacts, but not when using other processes or metals. The solar cell 100 may then be visually inspected and tested.

While specific embodiments of the present invention have been provided, it is to be understood that these embodiments are for illustration purposes and not limiting. Many additional embodiments will be apparent to persons of ordinary skill in the art reading this disclosure.

CLAIMS

What is claimed is:

1. A solar cell having a front side facing the sun to collect solar radiation during normal operation and a backside opposite the front side, the solar cell comprising:

an N-type silicon substrate;

a textured surface on the N-type silicon substrate on the front side of the solar cell;

an antireflective layer over the textured surface of the N-type silicon substrate;

a P-type polysilicon emitter forming a backside junction with the N-type silicon substrate;

a negative polarity metal contact making an electrical connection to the N-type silicon substrate from the front side of the solar cell; and

a positive polarity metal contact making an electrical connection to the P-type polysilicon emitter from the backside of the solar cell.

2. The solar cell of claim 1 wherein the antireflective layer comprises a layer of silicon nitride.

3. The solar cell of claim 1 further comprising a dielectric layer over the P-type polysilicon emitter.

4. The solar cell of claim 3 wherein the dielectric layer comprises silicon dioxide.

5. The solar cell of claim 3 further comprising a trench cutting through the dielectric layer and the P-type polysilicon emitter and into a portion of the N-type silicon substrate on the backside of the solar cell.

6. The solar cell of claim 1wherein the positive polarity metal contact comprises a metal forming an infrared reflecting layer with a dielectric layer.

7. The solar cell of claim 1 wherein the positive polarity metal contact comprises silver forming an infrared reflecting layer with a dielectric layer comprising silicon dioxide.

8. The solar cell of claim 1 wherein the negative polarity metal contact comprises a metal formed in a contact hole to the N-type silicon substrate.

9. A method of fabricating a solar cell having a front side facing the sun to collect solar radiation during normal operation and a backside opposite the front side, the method comprising:

forming a layer of polysilicon over a back surface of an N-type silicon substrate on the backside of the solar cell;

forming a P-type dopant source over the layer of polysilicon;

forming a capping layer over the P-type dopant source; and

diffusing P-type dopants from the P-type dopant source to the layer of polysilicon to form a backside junction with the N-type silicon substrate; and

diffusing N-type dopants into a front surface of the N-type silicon substrate.

10. The method of claim 9 wherein the P-type dopant source comprises borosilicate glass.

11. The method of claim 9 wherein diffusing N-type dopants into the front surface of the N-type silicon substrate includes forming an N-type dopant source over the N-type silicon substrate and diffusing N-type dopants from the N-type dopants source into the N-type silicon substrate.

12. The method of claim 11 wherein the N-type dopant source comprises phosphorus doped silicon dioxide.

13. The method of claim 9 further comprising:

texturing the front surface of the N-type silicon substrate; and

forming an antireflective layer over the textured front surface of the N-type silicon substrate.

14. The method of claim 13 wherein the antireflective layer comprises silicon nitride.

15. The method of claim 9 wherein the diffusion of P-type dopants from the P-type dopant source to the layer of polysilicon and the diffusion of N-type dopants into the front surface of the N-type silicon substrate are performed in situ.

16. The method of claim 9 wherein the capping layer comprises undoped silicon dioxide.

17. A solar cell having a front side facing the sun to collect solar radiation during normal operation and a backside opposite the front side, the solar cell comprising:

a substrate having a textured front surface;

an emitter layer formed over a back surface of the substrate, the emitter layer forming a backside junction with the substrate;

a first metal contact making an electrical connection to the substrate on the front side of the solar cell; and

a second metal contact making an electrical connection to the emitter layer on the backside of the solar cell, the first metal contact and the second metal contact being configured to allow an external electrical circuit to be powered by the solar cell.

18. The solar cell of claim 17 further comprising an antireflective layer over the textured front surface of the substrate.

19. The solar cell of claim 17 wherein the substrate comprises an N-type silicon substrate and the emitter layer comprises a P-type doped polysilicon.

20. The solar cell of claim 17 wherein the second metal contact comprises silver formed over a layer of silicon dioxide.

ABSTRACT

A bipolar solar cell includes a backside junction formed by an N-type silicon substrate and a P-type polysilicon emitter formed on the backside of the solar cell. An antireflection layer may be formed on a textured front surface of the silicon substrate. A negative polarity metal contact on the front side of the solar cell makes an electrical connection to the substrate, while a positive polarity metal contact on the backside of the solar cell makes an electrical connection to the polysilicon emitter. An external electrical circuit may be connected to the negative and positive metal contacts to be powered by the solar cell. The positive polarity metal contact may form an infrared reflecting layer with an underlying dielectric layer for increased solar radiation collection.

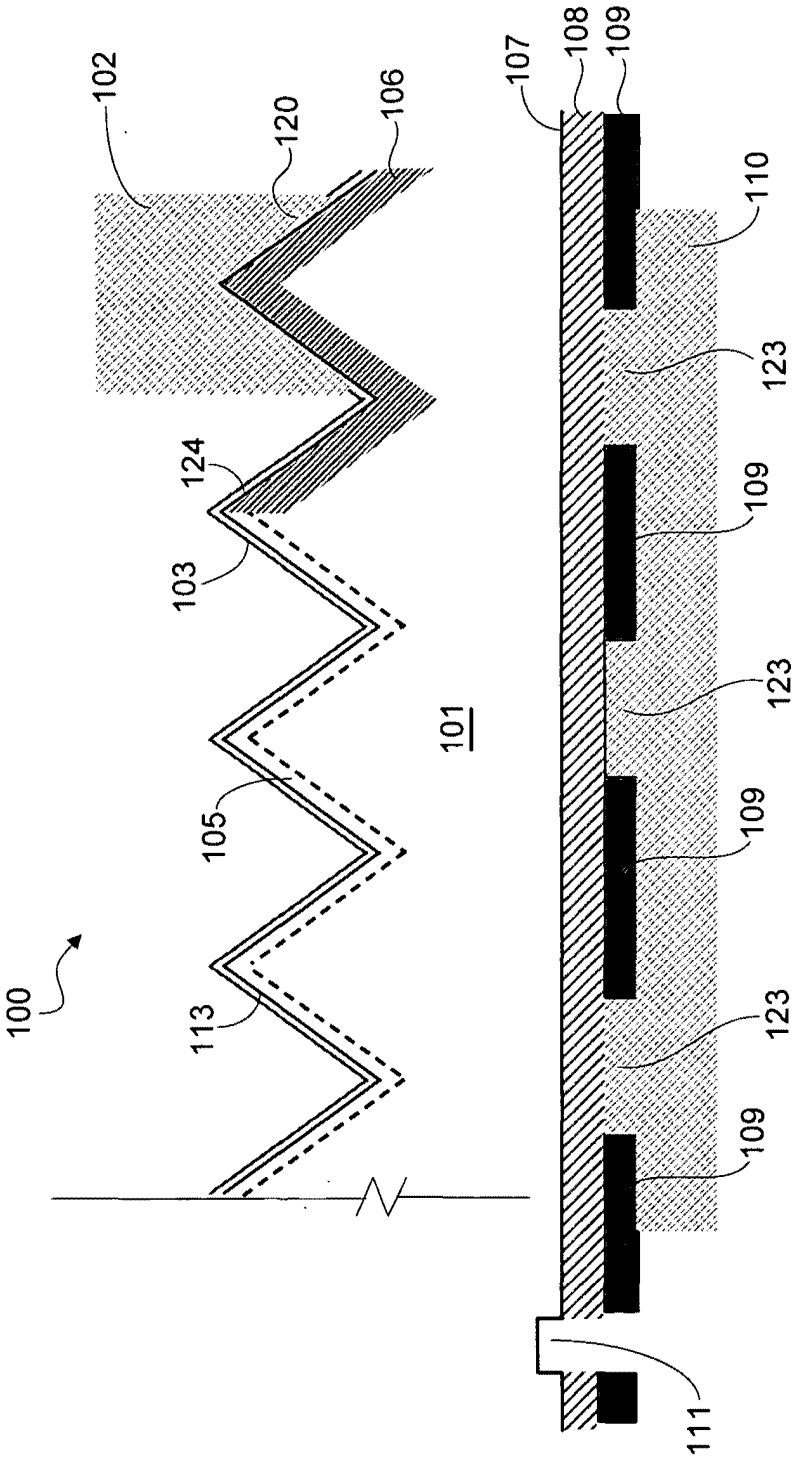
100
102
120
106
124
103
105
113
101
107
108
109
110
123
109
123
109
123
109
111

FIG. 1

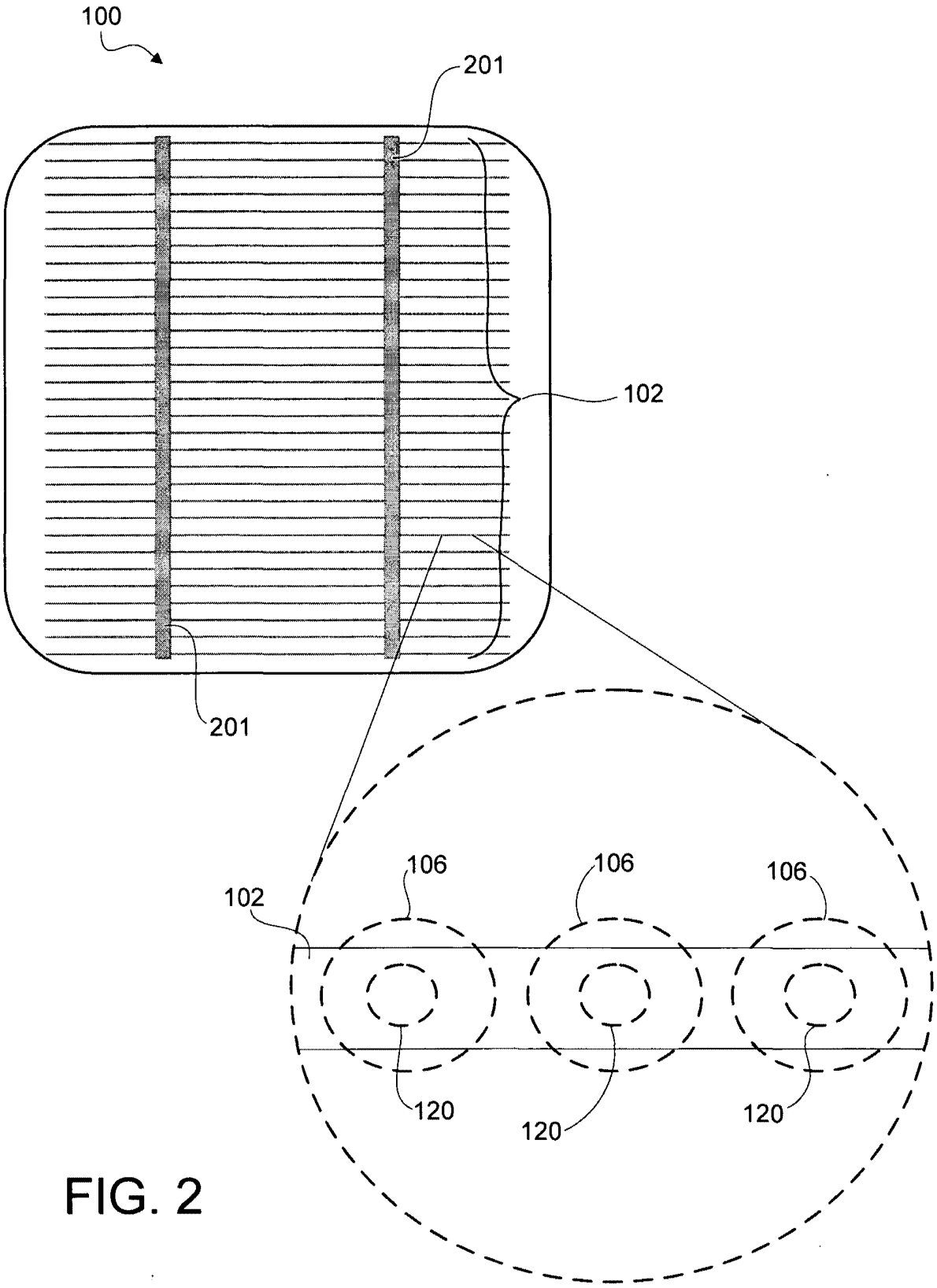

FIG. 2

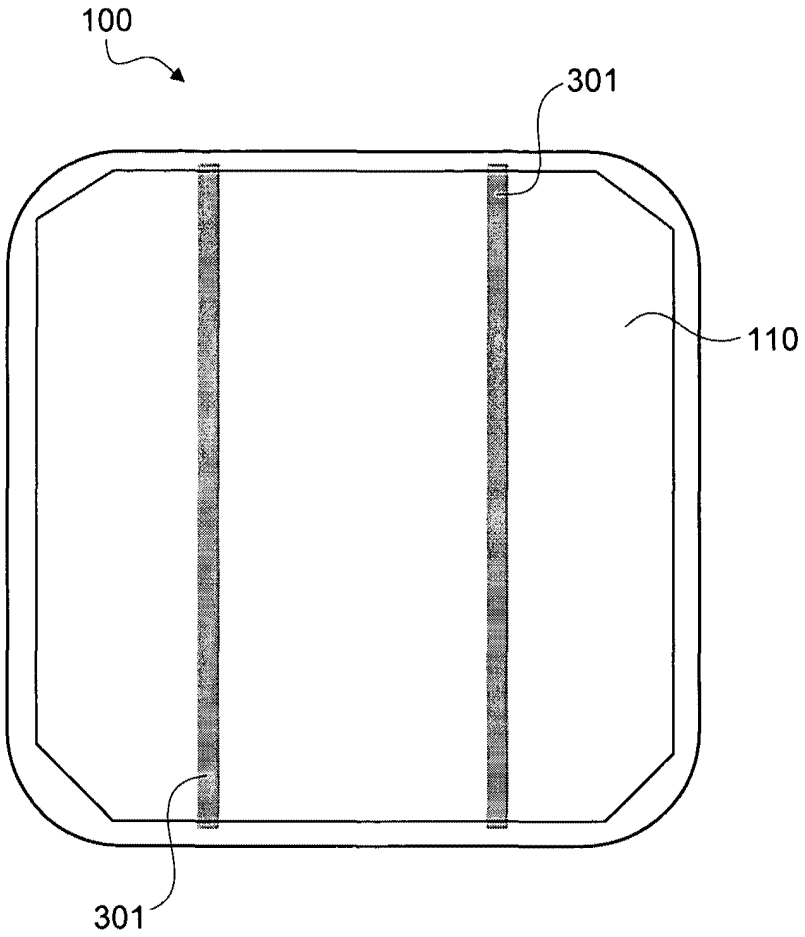

FIG. 3

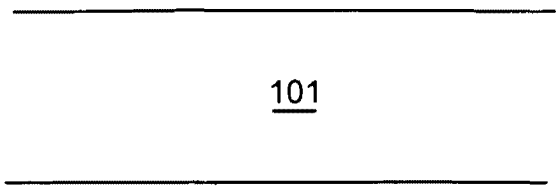

FIG. 4A

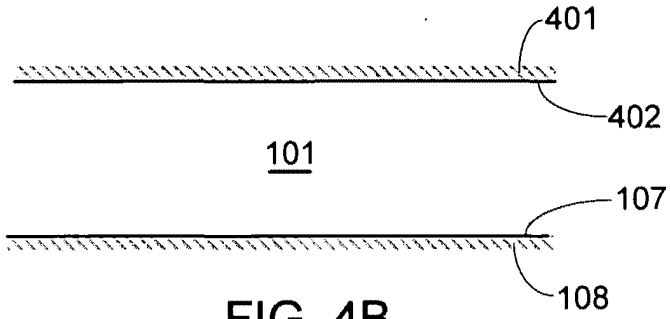

FIG. 4B

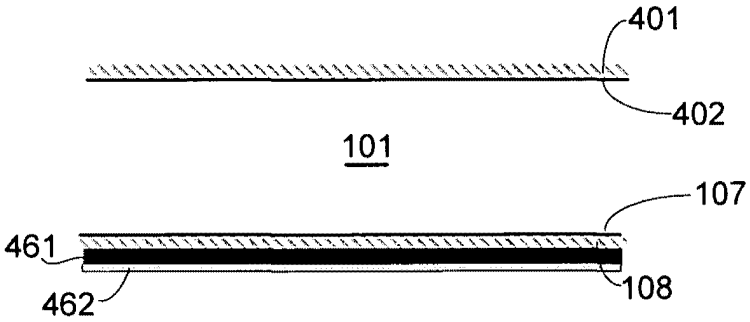

FIG. 4C

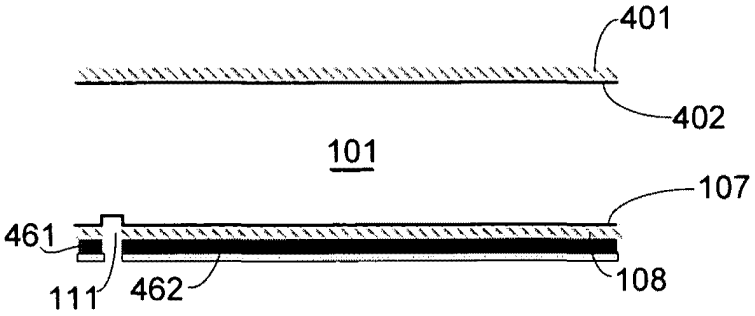

FIG. 4D

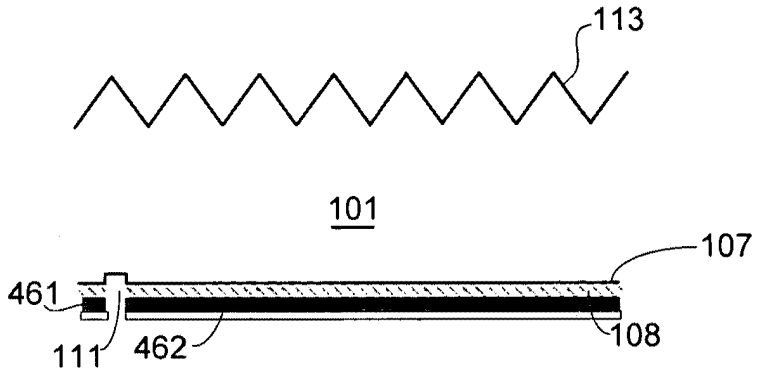

FIG. 4E

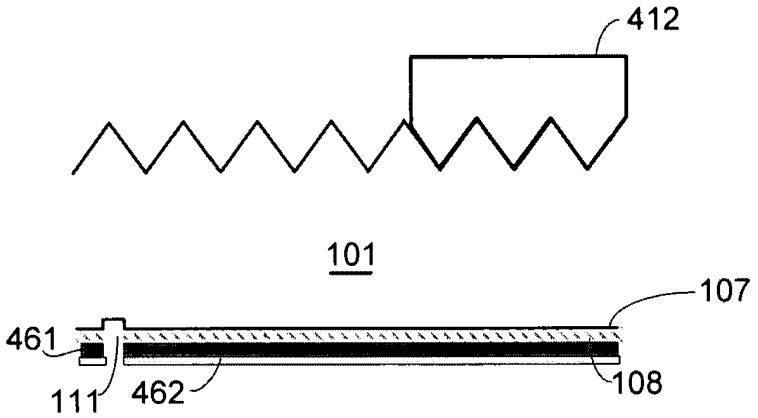

FIG. 4F

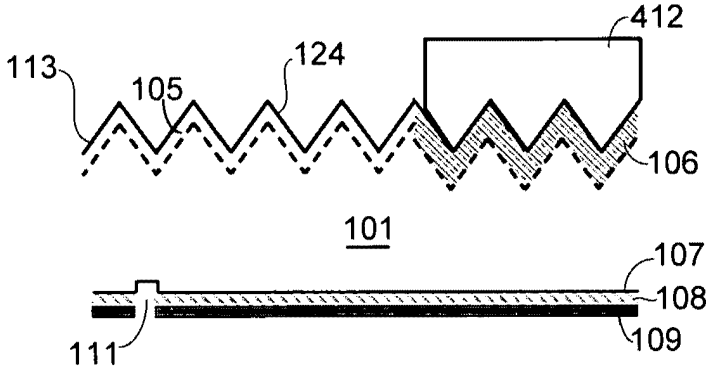

FIG. 4G

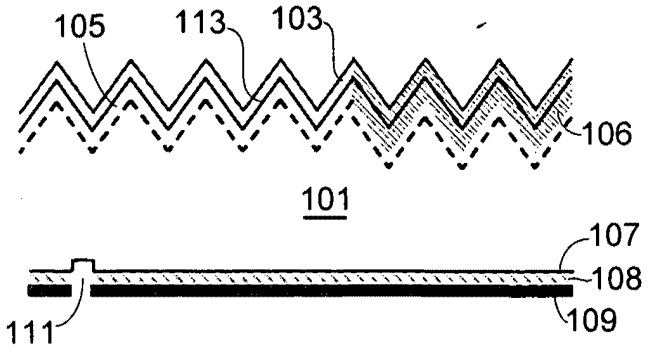

FIG. 4H

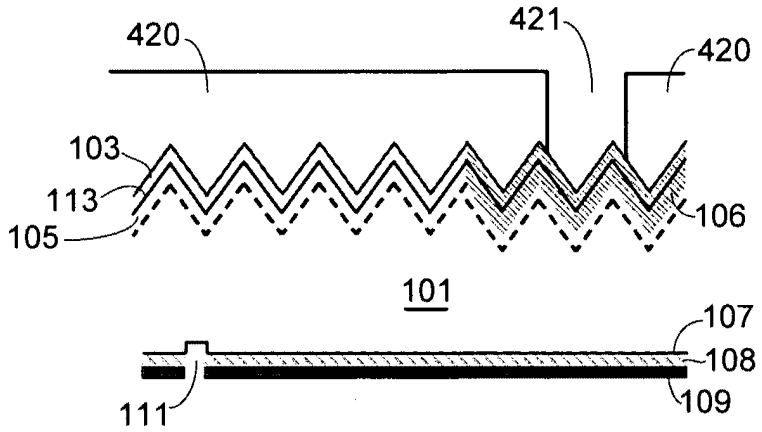

FIG. 4I

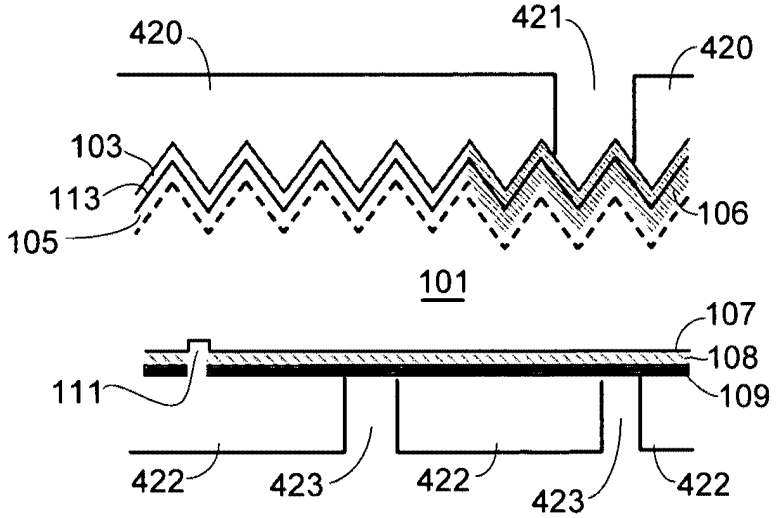

FIG. 4J

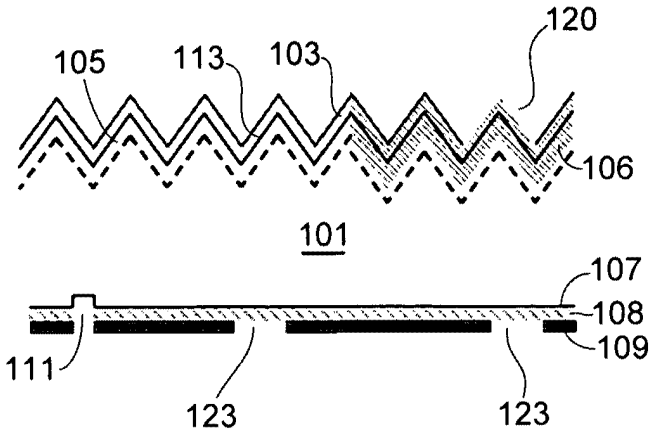

FIG. 4K

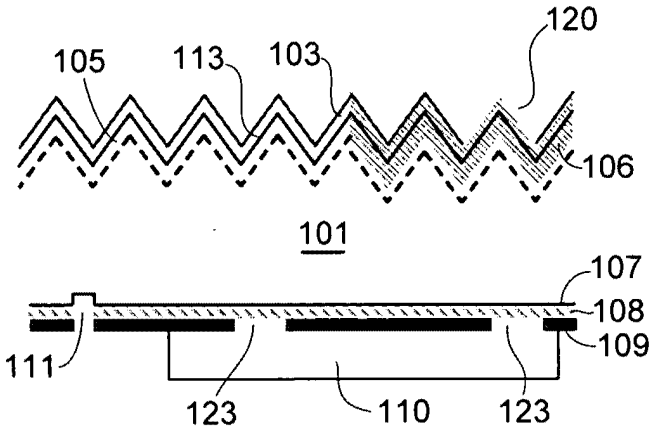

FIG. 4L

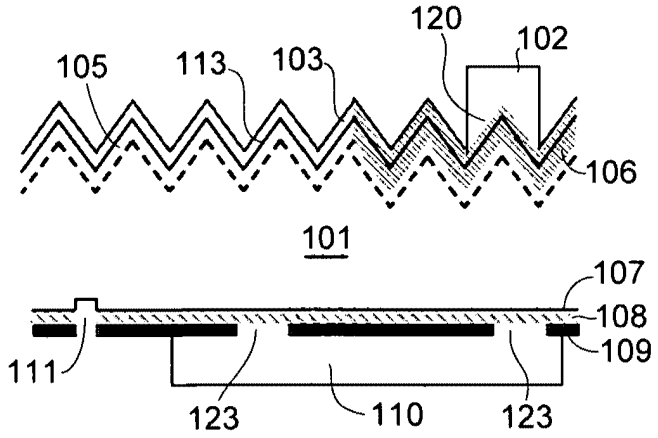

FIG. 4M

PTO/SB/01 (10-07)
Approved for use through 06/30/2010. OMB 0651-0032
U.S. Patent and Trademark Office; U.S. DEPARTMENT OF COMMERCE
Under the Paperwork Reduction Act of 1995, no persons are required to respond to a collection of information unless it contains a valid OMB control number.

DECLARATION FOR UTILITY OR DESIGN PATENT APPLICATION (37 CFR 1.63)

☒ Declaration Submitted With Initial Filing OR ☐ Declaration Submitted after Initial Filing (surcharge (37 CFR 1.16 (e)) required)

Attorney Docket Number	10031.004200
First Named Inventor	Peter John Cousins
COMPLETE IF KNOWN	
Application Number	/
Filing Date	
Art Unit	
Examiner Name	

I hereby declare that:

Each inventor's residence, mailing address, and citizenship are as stated below next to their name.

I believe the inventor(s) named below to be the original and first inventor(s) of the subject matter which is claimed and for which a patent is sought on the invention entitled:

FRONT CONTACT SOLAR CELL WITH FORMED EMITTER

the specification of which *(Title of the Invention)*

☒ is attached hereto

OR

☐ was filed on (MM/DD/YYYY) _____ as United States Application Number or PCT International Application Number _____ and was amended on (MM/DD/YYYY) _____ (if applicable).

I hereby state that I have reviewed and understand the contents of the above identified specification, including the claims, as amended by any amendment specifically referred to above.

I acknowledge the duty to disclose information which is material to patentability as defined in 37 CFR 1.56, including for continuation-in-part applications, material information which became available between the filing date of the prior application and the national or PCT international filing date of the continuation-in-part application.

I hereby claim foreign priority benefits under 35 U.S.C. 119(a)-(d) or (f), or 365(b) of any foreign application(s) for patent, inventor's or plant breeder's rights certificate(s), or 365(a) of any PCT international application which designated at least one country other than the United States of America, listed below and have also identified below, by checking the box, any foreign application for patent, inventor's or plant breeder's rights certificate(s), or any PCT international application having a filing date before that of the application on which priority is claimed.

Prior Foreign Application Number(s)	Country	Foreign Filing Date (MM/DD/YYYY)	Priority Not Claimed	Certified Copy Attached? YES	NO
			☐	☐	☐
			☐	☐	☐
			☐	☐	☐
			☐	☐	☐

☐ Additional foreign application numbers are listed on a supplemental priority data sheet PTO/SB/02B attached hereto.

This collection of information is required by 35 U.S.C. 115 and 37 CFR 1.63. The information is required to obtain or retain a benefit by the public which is to file (and by the USPTO to process) an application. Confidentiality is governed by 35 U.S.C. 122 and 37 CFR 1.11 and 1.14. This collection is estimated to take 21 minutes to complete, including gathering, preparing, and submitting the completed application form to the USPTO. Time will vary depending upon the individual case. Any comments on the amount of time you require to complete this form and/or suggestions for reducing this burden, should be sent to the Chief Information Officer, U.S. Patent and Trademark Office, U.S. Department of Commerce, P.O. Box 1450, Alexandria, VA 22313-1450. DO NOT SEND FEES OR COMPLETED FORMS TO THIS ADDRESS. SEND TO: **Commissioner for Patents, P.O. Box 1450, Alexandria, VA 22313-1450.**
If you need assistance in completing the form, call 1-800-PTO-9199 and select option 2.

PTO/SB/01 (10-07)
Approved for use through 06/30/2010. OMB 0651-0032
U.S. Patent and Trademark Office; U.S. DEPARTMENT OF COMMERCE
Under the Paperwork Reduction Act of 1995, no persons are required to respond to a collection of information unless it contains a valid OMB control number.

DECLARATION — Utility or Design Patent Application

Direct all correspondence to: ☒ The address associated with Customer Number	000074254	OR	☐ Correspondence address below
Name			
Address			
City	State	ZIP	
Country	Telephone	Email	

WARNING:

Petitioner/applicant is cautioned to avoid submitting personal information in documents filed in a patent application that may contribute to identity theft. Personal information such as social security numbers, bank account numbers, or credit card numbers (other than a check or credit card authorization form PTO-2038 submitted for payment purposes) is never required by the USPTO to support a petition or an application. If this type of personal information is included in documents submitted to the USPTO, petitioners/applicants should consider redacting such personal information from the documents before submitting them to the USPTO. Petitioner/applicant is advised that the record of a patent application is available to the public after publication of the application (unless a non-publication request in compliance with 37 CFR 1.213(a) is made in the application) or issuance of a patent. Furthermore, the record from an abandoned application may also be available to the public if the application is referenced in a published application or an issued patent (see 37 CFR 1.14). Checks and credit card authorization forms PTO-2038 submitted for payment purposes are not retained in the application file and therefore are not publicly available.

I hereby declare that all statements made herein of my own knowledge are true and that all statements made on information and belief are believed to be true; and further that these statements were made with the knowledge that willful false statements and the like so made are punishable by fine or imprisonment, or both, under 18 U.S.C. 1001 and that such willful false statements may jeopardize the validity of the application or any patent issued thereon.

NAME OF SOLE OR FIRST INVENTOR:		☐ A petition has been filed for this unsigned inventor	
Given Name (first and middle [if any]) PETER JOHN		Family Name or Surname COUSINS	
Inventor's Signature		Date 15 Feb 2008	
Residence: City MENLO PARK	State CA	Country US	Citizenship AUSTRALIA
Mailing Address 6 FREDRICK COURT			
City MENLO PARK	State CA	Zip 94025	Country US

☐ Additional inventors or a legal representative are being named on the ____ supplemental sheet(s) PTO/SB/02A or 02LR attached hereto.

PTO/SB/81 (01-06)
Approved for use through 12/31/2008. OMB 0651-0035
U.S. Patent and Trademark Office; U.S. DEPARTMENT OF COMMERCE
Under the Paperwork Reduction Act of 1995, no persons are required to respond to a collection of information unless it displays a valid OMB control number.

POWER OF ATTORNEY and CORRESPONDENCE ADDRESS INDICATION FORM

Application Number	
Filing Date	
First Named Inventor	Peter John Cousins
Title	Front Contact Solar Cell With Formed Emitter
Art Unit	unknown
Examiner Name	unknown
Attorney Docket Number	10031.004200

I hereby revoke all previous powers of attorney given in the above-identified application.

I hereby appoint:

☒ Practitioners associated with the Customer Number: **000074254**

OR

☐ Practitioner(s) named below:

Name	Registration Number

as my/our attorney(s) or agent(s) to prosecute the application identified above, and to transact all business in the United States Patent and Trademark Office connected therewith.

Please recognize or change the correspondence address for the above-identified application to:

☒ The address associated with the above-mentioned Customer Number

OR

☐ The address associated with Customer Number:

OR

☐ Firm *or* Individual Name			
Address			
City		State	ZIP
Country			
Telephone		Email	

I am the:

☒ Applicant/Inventor.

☐ Assignee of record of the entire interest. See 37 CFR 3.71.

Statement under 37 CFR 3.73(b) is enclosed. (Form PTO/SB/96)

SIGNATURE of Applicant or Assignee of Record

Signature		Date	15 Feb. 2008
Name	Peter John Cousins	Telephone	
Title and Company			

NOTE: Signatures of all the inventors or assignees of record of the entire interest or their representative(s) are required. Submit multiple forms if more than one signature is required, see below*.

☒ *Total of 1 form is submitted.

This collection of information is required by 37 CFR 1.31, 1.32 and 1.33. The information is required to obtain or retain a benefit by the public which is to file (and by the USPTO to process) an application. Confidentiality is governed by 35 U.S.C. 122 and 37 CFR 1.11 and 1.14. This collection is estimated to take 3 minutes to complete, including gathering, preparing, and submitting the completed application form to the USPTO. Time will vary depending upon the individual case. Any comments on the amount of time you require to complete this form and/or suggestions for reducing this burden, should be sent to the Chief Information Officer, U.S. Patent and Trademark Office, U.S. Department of Commerce, P.O. Box 1450, Alexandria, VA 22313-1450. DO NOT SEND FEES OR COMPLETED FORMS TO THIS ADDRESS. SEND TO: Commissioner for Patents, P.O. Box 1450, Alexandria, VA 22313-1450.

If you need assistance in completing the form, call 1-800-PTO-9199 and select option 2.

PTO/SB/35 (01-08)
Approved for use through 02/29/2008. OMB 0651-0031
U.S. Patent and Trademark Office; U. S. DEPARTMENT OF COMMERCE
Under the Paperwork Reduction Act of 1995, no persons are required to respond to a collection of information unless it displays a valid OMB control number.

NONPUBLICATION REQUEST UNDER 35 U.S.C. 122(b)(2)(B)(i)	First Named Inventor	Peter John Cousins
	Title	Front Contact Solar Cell With Formed Emitter
	Attorney Docket Number	10031.004200

I hereby certify that the invention disclosed in the attached application **has not and will not be** the subject of an application filed in another country, or under a multilateral agreement, that requires publication at eighteen months after filing.

I hereby request that the attached application not be published under 35 U.S.C. 122(b).

Signature	February 20, 2008 Date
Patrick D. Benedicto Typed or printed name	40,909 Registration Number, if applicable
(408) 436-2110 Telephone Number	

This request must be signed in compliance with 37 CFR 1.33(b) and submitted with the application **upon filing.**

Applicant may rescind this nonpublication request at any time. If applicant rescinds a request that an application not be published under 35 U.S.C. 122(b), the application will be scheduled for publication at eighteen months from the earliest claimed filing date for which a benefit is claimed.

If applicant subsequently files an application directed to the invention disclosed in the attached application in another country, or under a multilateral international agreement, that requires publication of applications eighteen months after filing, the applicant **must** notify the United States Patent and Trademark Office of such filing within forty-five (45) days after the date of the filing of such foreign or international application. **Failure to do so will result in abandonment of this application (35 U.S.C. 122(b)(2)(B)(iii)).**

This collection of information is required by 37 CFR 1.213(a). The information is required to obtain or retain a benefit by the public which is to file (and by the USPTO to process) an application. Confidentiality is governed by 35 U.S.C. 122 and 37 CFR 1.11 and 1.14. This collection is estimated to take 6 minutes to complete, including gathering, preparing, and submitting the completed application form to the USPTO. Time will vary depending upon the individual case. Any comments on the amount of time you require to complete this form and/or suggestions for reducing this burden, should be sent to the Chief Information Officer, U.S. Patent and Trademark Office, U.S. Department of Commerce, **P.O. Box 1450, Alexandria, VA 22313-1450**. DO NOT SEND FEES OR COMPLETED FORMS TO THIS ADDRESS. **SEND TO: Commissioner for Patents, P.O. Box 1450, Alexandria, VA 22313-1450.**

If you need assistance in completing the form, call 1-800-PTO-9199 (1-800-786-9199) and select option 2.

PATENT APPLICATION SERIAL NO._____

U.S. DEPARTMENT OF COMMERCE
PATENT AND TRADEMARK OFFICE
FEE RECORD SHEET

02/25/2008 ATRINH 00000004 12070742

01 FC:1011	310.00 OP
02 FC:1111	510.00 OP
03 FC:1311	210.00 OP

PTO-1556
(5/87)

*U.S. Government Printing Office: 2002- 489-267/69033

PTO/SB/06 (10-07)
Approved for use through 06/30/2010. OMB 0651-0032
U.S. Patent and Trademark Office; U.S. DEPARTMENT OF COMMERCE
Under the Paperwork Reduction Act of 1995, no persons are required to respond to a collection of information unless it displays a valid OMB control number.

PATENT APPLICATION FEE DETERMINATION RECORD

Substitute for Form PTO-875

Application or Docket Number: 12070742

APPLICATION AS FILED – PART I

FOR	(Column 1) NUMBER FILED	(Column 2) NUMBER EXTRA	SMALL ENTITY RATE ($)	SMALL ENTITY FEE ($)	OR	OTHER THAN SMALL ENTITY RATE ($)	OTHER THAN SMALL ENTITY FEE ($)
BASIC FEE (37 CFR 1.16(a), (b), or (c))	N/A	N/A	N/A	$155		N/A	$310
SEARCH FEE (37 CFR 1.16(k), (i), or (m))	N/A	N/A	N/A	$255		N/A	$510
EXAMINATION FEE (37 CFR 1.16(o), (p), or (q))	N/A	N/A	N/A	$105		N/A	$210
TOTAL CLAIMS (37 CFR 1.16(i))	20 minus 20 =	* 0	X $25 =		OR	X $50 =	
INDEPENDENT CLAIMS (37 CFR 1.16(h))	3 minus 3 =	* 0	X $105 =			X $210 =	
APPLICATION SIZE FEE (37 CFR 1.16(s))	If the specification and drawings exceed 100 sheets of paper, the application size fee due is $260 ($130 for small entity) for each additional 50 sheets or fraction thereof. See 35 U.S.C. 41(a)(1)(G) and 37 CFR 1.16(s).		$130			$260	
MULTIPLE DEPENDENT CLAIM PRESENT (37 CFR 1.16(j))			$185			$370	
			TOTAL			TOTAL	1030

* If the difference in column 1 is less than zero, enter "0" in column 2.

1.9

17

APPLICATION AS AMENDED – PART II

		(Column 1) CLAIMS REMAINING AFTER AMENDMENT		(Column 2) HIGHEST NUMBER PREVIOUSLY PAID FOR	(Column 3) PRESENT EXTRA	SMALL ENTITY RATE ($)	SMALL ENTITY ADDI-TIONAL FEE ($)	OR	OTHER THAN SMALL ENTITY RATE ($)	OTHER THAN SMALL ENTITY ADDI-TIONAL FEE ($)
AMENDMENT A	Total (37 CFR 1.16(i))	*	Minus	**	=	X $25 =		OR	X $50 =	
	Independent (37 CFR 1.16(h))	*	Minus	***	=	X $105 =		OR	X $210 =	
	Application Size Fee (37 CFR 1.16(s))									
	FIRST PRESENTATION OF MULTIPLE DEPENDENT CLAIM (37 CFR 1.16(j))					$185		OR	$370	
						TOTAL ADD'L FEE		OR	TOTAL ADD'L FEE	

		(Column 1) CLAIMS REMAINING AFTER AMENDMENT		(Column 2) HIGHEST NUMBER PREVIOUSLY PAID FOR	(Column 3) PRESENT EXTRA	RATE ($)	ADDI-TIONAL FEE ($)	OR	RATE ($)	ADDI-TIONAL FEE ($)
AMENDMENT B	Total (37 CFR 1.16(i))	*	Minus	**	=	X $25 =		OR	X $50 =	
	Independent (37 CFR 1.16(h))	*	Minus	***	=	X $105 =		OR	X $210 =	
	Application Size Fee (37 CFR 1.16(s))									
	FIRST PRESENTATION OF MULTIPLE DEPENDENT CLAIM (37 CFR 1.16(j))					$185		OR	$370	
						TOTAL ADD'L FEE		OR	TOTAL ADD'L FEE	

* If the entry in column 1 is less than the entry in column 2, write "0" in column 3.
** If the "Highest Number Previously Paid For" IN THIS SPACE is less than 20, enter "20".
*** If the "Highest Number Previously Paid For" IN THIS SPACE is less than 3, enter "3".
The "Highest Number Previously Paid For" (Total or Independent) is the highest number found in the appropriate box in column 1.

This collection of information is required by 37 CFR 1.16. The information is required to obtain or retain a benefit by the public which is to file (and by the USPTO to process) an application. Confidentiality is governed by 35 U.S.C. 122 and 37 CFR 1.14. This collection is estimated to take 12 minutes to complete, including gathering, preparing, and submitting the completed application form to the USPTO. Time will vary depending upon the individual case. Any comments on the amount of time you require to complete this form and/or suggestions for reducing this burden, should be sent to the Chief Information Officer, U.S. Patent and Trademark Office, U.S. Department of Commerce, P.O. Box 1450, Alexandria, VA 22313-1450. DO NOT SEND FEES OR COMPLETED FORMS TO THIS ADDRESS. **SEND TO: Commissioner for Patents, P.O. Box 1450, Alexandria, VA 22313-1450.**

If you need assistance in completing the form, call 1-800-PTO-9199 and select option 2.

UNITED STATES PATENT AND TRADEMARK OFFICE

UNITED STATES DEPARTMENT OF COMMERCE
United States Patent and Trademark Office
Address: COMMISSIONER FOR PATENTS
P.O. Box 1450
Alexandria, Virginia 22313-1450
www.uspto.gov

APPLICATION NUMBER	FILING or 371(c) DATE	GRP ART UNIT	FIL FEE REC'D	ATTY.DOCKET.NO	TOT CLAIMS	IND CLAIMS
12/070,742	02/20/2008	1795	1030	10031.004200	20	3

CONFIRMATION NO. 2015

FILING RECEIPT

74254
Okamoto & Benedicto LLP
P.O. Box 641330
San Jose, CA 95164-1330

OC000000028832602

Date Mailed: 03/17/2008

Receipt is acknowledged of this non-provisional patent application. The application will be taken up for examination in due course. Applicant will be notified as to the results of the examination. Any correspondence concerning the application must include the following identification information: the U.S. APPLICATION NUMBER, FILING DATE, NAME OF APPLICANT, and TITLE OF INVENTION. Fees transmitted by check or draft are subject to collection. Please verify the accuracy of the data presented on this receipt. **If an error is noted on this Filing Receipt, please write to the Office of Initial Patent Examination's Filing Receipt Corrections. Please provide a copy of this Filing Receipt with the changes noted thereon. If you received a "Notice to File Missing Parts" for this application, please submit any corrections to this Filing Receipt with your reply to the Notice. When the USPTO processes the reply to the Notice, the USPTO will generate another Filing Receipt incorporating the requested corrections**

Applicant(s)

Peter John Cousins, Menlo Park, CA;

Power of Attorney: The patent practitioners associated with Customer Number 000074254

Domestic Priority data as claimed by applicant

Foreign Applications

If Required, Foreign Filing License Granted: 03/13/2008

The country code and number of your priority application, to be used for filing abroad under the Paris Convention, is **US 12/070,742**

Projected Publication Date: Request for Non-Publication Acknowledged

Non-Publication Request: Yes

Early Publication Request: No

Title

Front contact solar cell with formed emitter

Preliminary Class

136

PROTECTING YOUR INVENTION OUTSIDE THE UNITED STATES

Since the rights granted by a U.S. patent extend only throughout the territory of the United States and have no effect in a foreign country, an inventor who wishes patent protection in another country must apply for a patent in a specific country or in regional patent offices. Applicants may wish to consider the filing of an international application under the Patent Cooperation Treaty (PCT). An international (PCT) application generally has the same effect as a regular national patent application in each PCT-member country. The PCT process **simplifies** the filing of patent applications on the same invention in member countries, but **does not result** in a grant of "an international patent" and does not eliminate the need of applicants to file additional documents and fees in countries where patent protection is desired.

Almost every country has its own patent law, and a person desiring a patent in a particular country must make an application for patent in that country in accordance with its particular laws. Since the laws of many countries differ in various respects from the patent law of the United States, applicants are advised to seek guidance from specific foreign countries to ensure that patent rights are not lost prematurely.

Applicants also are advised that in the case of inventions made in the United States, the Director of the USPTO must issue a license before applicants can apply for a patent in a foreign country. The filing of a U.S. patent application serves as a request for a foreign filing license. The application's filing receipt contains further information and guidance as to the status of applicant's license for foreign filing.

Applicants may wish to consult the USPTO booklet, "General Information Concerning Patents" (specifically, the section entitled "Treaties and Foreign Patents") for more information on timeframes and deadlines for filing foreign patent applications. The guide is available either by contacting the USPTO Contact Center at 800-786-9199, or it can be viewed on the USPTO website at http://www.uspto.gov/web/offices/pac/doc/general/index.html.

For information on preventing theft of your intellectual property (patents, trademarks and copyrights), you may wish to consult the U.S. Government website, http://www.stopfakes.gov. Part of a Department of Commerce initiative, this website includes self-help "toolkits" giving innovators guidance on how to protect intellectual property in specific countries such as China, Korea and Mexico. For questions regarding patent enforcement issues, applicants may call the U.S. Government hotline at 1-866-999-HALT (1-866-999-4158).

LICENSE FOR FOREIGN FILING UNDER

Title 35, United States Code, Section 184

Title 37, Code of Federal Regulations, 5.11 & 5.15

GRANTED

The applicant has been granted a license under 35 U.S.C. 184, if the phrase "IF REQUIRED, FOREIGN FILING LICENSE GRANTED" followed by a date appears on this form. Such licenses are issued in all applications where the conditions for issuance of a license have been met, regardless of whether or not a license may be required as

set forth in 37 CFR 5.15. The scope and limitations of this license are set forth in 37 CFR 5.15(a) unless an earlier license has been issued under 37 CFR 5.15(b). The license is subject to revocation upon written notification. The date indicated is the effective date of the license, unless an earlier license of similar scope has been granted under 37 CFR 5.13 or 5.14.

This license is to be retained by the licensee and may be used at any time on or after the effective date thereof unless it is revoked. This license is automatically transferred to any related applications(s) filed under 37 CFR 1.53(d). This license is not retroactive.

The grant of a license does not in any way lessen the responsibility of a licensee for the security of the subject matter as imposed by any Government contract or the provisions of existing laws relating to espionage and the national security or the export of technical data. Licensees should apprise themselves of current regulations especially with respect to certain countries, of other agencies, particularly the Office of Defense Trade Controls, Department of State (with respect to Arms, Munitions and Implements of War (22 CFR 121-128)); the Bureau of Industry and Security, Department of Commerce (15 CFR parts 730-774); the Office of Foreign AssetsControl, Department of Treasury (31 CFR Parts 500+) and the Department of Energy.

NOT GRANTED

No license under 35 U.S.C. 184 has been granted at this time, if the phrase "IF REQUIRED, FOREIGN FILING LICENSE GRANTED" DOES NOT appear on this form. Applicant may still petition for a license under 37 CFR 5.12, if a license is desired before the expiration of 6 months from the filing date of the application. If 6 months has lapsed from the filing date of this application and the licensee has not received any indication of a secrecy order under 35 U.S.C. 181, the licensee may foreign file the application pursuant to 37 CFR 5.15(b).

PTO/SB/08a (03-08)
Approved for use through 04/30/2008. OMB 0651-0031
U.S. Patent and Trademark Office; U.S. DEPARTMENT OF COMMERCE
Under the Paperwork Reduction Act of 1995, no persons are required to respond to a collection of information unless it contains a valid OMB control number.

INFORMATION DISCLOSURE STATEMENT BY APPLICANT (Not for submission under 37 CFR 1.99)		
	Application Number	12070742
	Filing Date	2008-02-20
	First Named Inventor	Peter John Cousins
	Art Unit	1795
	Examiner Name	unknown
	Attorney Docket Number	10031.004200

U.S.PATENTS						Remove
Examiner Initial*	Cite No	Patent Number	Kind Code[1]	Issue Date	Name of Patentee or Applicant of cited Document	Pages,Columns,Lines where Relevant Passages or Relevant Figures Appear
	1	7135350	B1	2006-11-14	Smith, et al.	
	2	6998288	B1	2006-02-14	Smith, et al.	
	3	4927770	A1	1990-05-22	Swanson	
	4	5053083	A1	1991-10-01	Sinton	
	5	5164019	A1	1992-11-17	Sinton	
	6	5217539	A1	1993-06-08	Fraas, et al.	
	7	5360990	A1	1994-11-01	Swanson	
	8	5369291	A1	1994-11-29	Swanson	

INFORMATION DISCLOSURE STATEMENT BY APPLICANT (Not for submission under 37 CFR 1.99)		
	Application Number	12070742
	Filing Date	2008-02-20
	First Named Inventor	Peter John Cousins
	Art Unit	1795
	Examiner Name	unknown
	Attorney Docket Number	10031.004200

	9	6274402	B1	2001-08-14	Verlinden, et al.	
	10	6313395	B1	2001-11-06	Crane, et al.	
	11	6333457	B1	2001-12-25	Mulligan, et al.	
	12	6337283	B1	2002-01-08	Verlinden, et al.	
	13	6387726	B1	2002-05-14	Verlinden, et al.	
	14	6423568	B1	2002-07-23	Verlinden, et al.	
	15	3961997		1976-06-08	Chu	
	16	5030295		1991-07-09	Swanson, et al.	
	17	5057439		1991-10-15	Swanson, et al.	
	18	6998288	B1	2006-02-14	Smith, et al.	
	19	5641362		1997-06-24	Meier	

INFORMATION DISCLOSURE STATEMENT BY APPLICANT (Not for submission under 37 CFR 1.99)		
	Application Number	12070742
	Filing Date	2008-02-20
	First Named Inventor	Peter John Cousins
	Art Unit	1795
	Examiner Name	unknown
	Attorney Docket Number	10031.004200

If you wish to add additional U.S. Patent citation information please click the Add button. Add

U.S.PATENT APPLICATION PUBLICATIONS Remove

Examiner Initial*	Cite No	Publication Number	Kind Code[1]	Publication Date	Name of Patentee or Applicant of cited Document	Pages,Columns,Lines where Relevant Passages or Relevant Figures Appear
	1	20040200520	A1	2004-10-14	Mulligan, et al.	

If you wish to add additional U.S. Published Application citation information please click the Add button. Add

FOREIGN PATENT DOCUMENTS Remove

Examiner Initial*	Cite No	Foreign Document Number[3]	Country Code[2] ¡	Kind Code[4]	Publication Date	Name of Patentee or Applicant of cited Document	Pages,Columns,Lines where Relevant Passages or Relevant Figures Appear	T[5]
	1							☐

If you wish to add additional Foreign Patent Document citation information please click the Add button Add

NON-PATENT LITERATURE DOCUMENTS Remove

Examiner Initials*	Cite No	Include name of the author (in CAPITAL LETTERS), title of the article (when appropriate), title of the item (book, magazine, journal, serial, symposium, catalog, etc), date, pages(s), volume-issue number(s), publisher, city and/or country where published.	T[5]
	1	W.P. MULLIGAN, et al., " A Flat-Plate Concentrator: Micro-Concentrator Design Overview", 2000, 3 sheets, Proceedings of the 28th IEEE PVSC.	☐
	2	K. R. McINTOSH, et al., " The Choice of Silicon Wafer for the Production of Low-Cost Rear-Contact Solar Cells", May 2003, 4 sheets, Sunpower Corporation, Sunnyvale, CA.	☐
	3	P.J. VERLINDEN, et al., " Will We have a 20%-Efficient(PTC) Photovoltaic System?", 2001, 6 sheets, Proceedings of the 17th Europe Photovoltaic Solar Energy Conference.	☐
	4	WILLIAM P. MULLIGAN, et al., " Development of Chip-Size Silicon Solar Cells", 2000, 6 sheets, Proceedings of the 28th IEEE PVSC.	☐

INFORMATION DISCLOSURE STATEMENT BY APPLICANT (Not for submission under 37 CFR 1.99)	Application Number	12070742
	Filing Date	2008-02-20
	First Named Inventor	Peter John Cousins
	Art Unit	1795
	Examiner Name	unknown
	Attorney Docket Number	10031.004200

	5	AKIRA TERAO, et al., "A Mirror-Less Design for Micro-Concentrator Modules", 2000, 4 sheets, Proceedings of the 28th IEEE PVSC.	☐
	6	P.J. VERLINDEN, et al., "Backside-Contact Silicon Solar Cells with Improved Efficiency for the '96 World Solar Challenge", 1997, 5 sheets, Proceedings of the 15th EPSEC.	☐
	7	P.J. VERLINDEN, et al., "One-Year Comparison of a Concentrator Module with Silicon Point-Contact Solar Cell to a Fixed Flat Plate Module in Northern California", 2000, 4 sheet, Proceedings of the 16th EPSEC.	☐
	8	RICHARD M. SWANSON "The Promise of Concentrators", 2000, Prog. Photovolt. Res. Appl. 8, pages 93-111,	☐
	9	RONALD A. SINTON, et al., "Simplified Backside-Contact Solar Cells", February 1990, pages 348-352, IEEE Transactions on Electron Devices, Vol. 37. No. 2.	☐
	10	RONALD A. SINTON "Device Physics and Characterization of Silicon Point-Contact Solar Cells", February 1997, pages 1-154, Stanford Electronics Laboratories, Stanford University, CA.	☐
	11	RICHARD ROLAND KING "Studies of Oxide-Passivated Emitters in Silicon and Applications to Solar Cells", August 1990, pages 1-200, (Thesis) Electrical Engineering Department of Stanford University, CA.	☐

If you wish to add additional non-patent literature document citation information please click the Add button Add

EXAMINER SIGNATURE

Examiner Signature		Date Considered	

*EXAMINER: Initial if reference considered, whether or not citation is in conformance with MPEP 609. Draw line through a citation if not in conformance and not considered. Include copy of this form with next communication to applicant.

[1] See Kind Codes of USPTO Patent Documents at www.USPTO.GOV or MPEP 901.04. [2] Enter office that issued the document, by the two-letter code (WIPO Standard ST.3). [3] For Japanese patent documents, the indication of the year of the reign of the Emperor must precede the serial number of the patent document. [4] Kind of document by the appropriate symbols as indicated on the document under WIPO Standard ST.16 if possible. [5] Applicant is to place a check mark here if English language translation is attached.

INFORMATION DISCLOSURE STATEMENT BY APPLICANT (Not for submission under 37 CFR 1.99)		
	Application Number	12070742
	Filing Date	2008-02-20
	First Named Inventor	Peter John Cousins
	Art Unit	1795
	Examiner Name	unknown
	Attorney Docket Number	10031.004200

CERTIFICATION STATEMENT

Please see 37 CFR 1.97 and 1.98 to make the appropriate selection(s):

☐ That each item of information contained in the information disclosure statement was first cited in any communication from a foreign patent office in a counterpart foreign application not more than three months prior to the filing of the information disclosure statement. See 37 CFR 1.97(e)(1).

OR

☐ That no item of information contained in the information disclosure statement was cited in a communication from a foreign patent office in a counterpart foreign application, and, to the knowledge of the person signing the certification after making reasonable inquiry, no item of information contained in the information disclosure statement was known to any individual designated in 37 CFR 1.56(c) more than three months prior to the filing of the information disclosure statement. See 37 CFR 1.97(e)(2).

☐ See attached certification statement.

☐ Fee set forth in 37 CFR 1.17 (p) has been submitted herewith.

☒ None

SIGNATURE

A signature of the applicant or representative is required in accordance with CFR 1.33, 10.18. Please see CFR 1.4(d) for the form of the signature.

Signature	/Patrick D. Benedicto, Reg No. 40,909/	Date (YYYY-MM-DD)	2008-05-23
Name/Print	Patrick D. Benedicto	Registration Number	40909

This collection of information is required by 37 CFR 1.97 and 1.98. The information is required to obtain or retain a benefit by the public which is to file (and by the USPTO to process) an application. Confidentiality is governed by 35 U.S.C. 122 and 37 CFR 1.14. This collection is estimated to take 1 hour to complete, including gathering, preparing and submitting the completed application form to the USPTO. Time will vary depending upon the individual case. Any comments on the amount of time you require to complete this form and/or suggestions for reducing this burden, should be sent to the Chief Information Officer, U.S. Patent and Trademark Office, U.S. Department of Commerce, P.O. Box 1450, Alexandria, VA 22313-1450. DO NOT SEND FEES OR COMPLETED FORMS TO THIS ADDRESS. **SEND TO: Commissioner for Patents, P.O. Box 1450, Alexandria, VA 22313-1450.**

Privacy Act Statement

The Privacy Act of 1974 (P.L. 93-579) requires that you be given certain information in connection with your submission of the attached form related to a patent application or patent. Accordingly, pursuant to the requirements of the Act, please be advised that: (1) the general authority for the collection of this information is 35 U.S.C. 2(b)(2); (2) furnishing of the information solicited is voluntary; and (3) the principal purpose for which the information is used by the U.S. Patent and Trademark Office is to process and/or examine your submission related to a patent application or patent. If you do not furnish the requested information, the U.S. Patent and Trademark Office may not be able to process and/or examine your submission, which may result in termination of proceedings or abandonment of the application or expiration of the patent.

The information provided by you in this form will be subject to the following routine uses:

1. The information on this form will be treated confidentially to the extent allowed under the Freedom of Information Act (5 U.S.C. 552) and the Privacy Act (5 U.S.C. 552a). Records from this system of records may be disclosed to the Department of Justice to determine whether the Freedom of Information Act requires disclosure of these record s.

2. A record from this system of records may be disclosed, as a routine use, in the course of presenting evidence to a court, magistrate, or administrative tribunal, including disclosures to opposing counsel in the course of settlement negotiations.

3. A record in this system of records may be disclosed, as a routine use, to a Member of Congress submitting a request involving an individual, to whom the record pertains, when the individual has requested assistance from the Member with respect to the subject matter of the record.

4. A record in this system of records may be disclosed, as a routine use, to a contractor of the Agency having need for the information in order to perform a contract. Recipients of information shall be required to comply with the requirements of the Privacy Act of 1974, as amended, pursuant to 5 U.S.C. 552a(m).

5. A record related to an International Application filed under the Patent Cooperation Treaty in this system of records may be disclosed, as a routine use, to the International Bureau of the World Intellectual Property Organization, pursuant to the Patent Cooperation Treaty.

6. A record in this system of records may be disclosed, as a routine use, to another federal agency for purposes of National Security review (35 U.S.C. 181) and for review pursuant to the Atomic Energy Act (42 U.S.C. 218(c)).

7. A record from this system of records may be disclosed, as a routine use, to the Administrator, General Services, or his/her designee, during an inspection of records conducted by GSA as part of that agency's responsibility to recommend improvements in records management practices and programs, under authority of 44 U.S.C. 2904 and 2906. Such disclosure shall be made in accordance with the GSA regulations governing inspection of records for this purpose, and any other relevant (i.e., GSA or Commerce) directive. Such disclosure shall not be used to make determinations about individuals.

8. A record from this system of records may be disclosed, as a routine use, to the public after either publication of the application pursuant to 35 U.S.C. 122(b) or issuance of a patent pursuant to 35 U.S.C. 151. Further, a record may be disclosed, subject to the limitations of 37 CFR 1.14, as a routine use, to the public if the record was filed in an application which became abandoned or in which the proceedings were terminated and which application is referenced by either a published application, an application open to public inspections or an issued patent.

9. A record from this system of records may be disclosed, as a routine use, to a Federal, State, or local law enforcement agency, if the USPTO becomes aware of a violation or potential violation of law or regulation.

Electronic Acknowledgement Receipt

EFS ID:	3350346
Application Number:	12070742
International Application Number:	
Confirmation Number:	2015
Title of Invention:	Front contact solar cell with formed emitter
First Named Inventor/Applicant Name:	Peter John Cousins
Customer Number:	74254
Filer:	Patrick D. Benedicto/Jina Mangaoang
Filer Authorized By:	Patrick D. Benedicto
Attorney Docket Number:	10031.004200
Receipt Date:	23-MAY-2008
Filing Date:	20-FEB-2008
Time Stamp:	13:14:04
Application Type:	Utility under 35 USC 111(a)

Payment information:

Submitted with Payment	no

File Listing:

Document Number	Document Description	File Name	File Size(Bytes) /Message Digest	Multi Part /.zip	Pages (if appl.)
1	Information Disclosure Statement (IDS) Filed	IDS_SB08a.pdf	575599 5bdaa5db53ace488c327b152957effcf321a414d	no	6

Warnings:

Information:

2	NPL Documents	NPLref1.pdf	418193 6722a01007290c98c992b3f3676520ae0ba3d540	no	3
Warnings:					
Information:					
3	NPL Documents	NPLref2.pdf	328636 4b635fa09e064a19e86819c2b04e261c119f8e2b	no	4
Warnings:					
Information:					
4	NPL Documents	NPLref3.pdf	716987 4591b7e31a114b283841a9c0fe1355cb28081487	no	6
Warnings:					
Information:					
5	NPL Documents	NPLref4.pdf	770560 eb5c2bd3630e00d590e89424fa81aeaba7bc3459	no	6
Warnings:					
Information:					
6	NPL Documents	NPLref5.pdf	476202 205cb1edf151be6f3320554818df51250f7955a0	no	4
Warnings:					
Information:					
7	NPL Documents	NPLref6.pdf	313365 fa04f43a76185bd94ee68a8b24de0ef01430583d	no	5
Warnings:					
Information:					
8	NPL Documents	NPLref7.pdf	301792 5b44d1eba359154e1dfef5b839c41083c3914713	no	4
Warnings:					
Information:					
9	NPL Documents	NPLref8.pdf	1500526 e19a29df65032af3891241ef016c29ba0683a242	no	19
Warnings:					
Information:					
10	NPL Documents	NPLref9.pdf	608453 59088cdcaa082b5bc6b76456f8dd49bbec13b9b0	no	5
Warnings:					
Information:					

11	NPL Documents	NPLref10.pdf	4771715 1cc045ffc3bb7a71f4c5672204083599b577da31	no	176
Warnings:					
Information:					
12	NPL Documents	NPLref11.pdf	6879449 184742bd5cd42b7924733173e2f972ab71456cef	no	229
Warnings:					
Information:					
			Total Files Size (in bytes):	17661477	

This Acknowledgement Receipt evidences receipt on the noted date by the USPTO of the indicated documents, characterized by the applicant, and including page counts, where applicable. It serves as evidence of receipt similar to a Post Card, as described in MPEP 503.

New Applications Under 35 U.S.C. 111
If a new application is being filed and the application includes the necessary components for a filing date (see 37 CFR 1.53(b)-(d) and MPEP 506), a Filing Receipt (37 CFR 1.54) will be issued in due course and the date shown on this Acknowledgement Receipt will establish the filing date of the application.

National Stage of an International Application under 35 U.S.C. 371
If a timely submission to enter the national stage of an international application is compliant with the conditions of 35 U.S.C. 371 and other applicable requirements a Form PCT/DO/EO/903 indicating acceptance of the application as a national stage submission under 35 U.S.C. 371 will be issued in addition to the Filing Receipt, in due course.

New International Application Filed with the USPTO as a Receiving Office
If a new international application is being filed and the international application includes the necessary components for an international filing date (see PCT Article 11 and MPEP 1810), a Notification of the International Application Number and of the International Filing Date (Form PCT/RO/105) will be issued in due course, subject to prescriptions concerning national security, and the date shown on this Acknowledgement Receipt will establish the international filing date of the application.

PTO/SB/36 (12-08)
Approved for use through 01/31/2009. OMB 0651-0031
U.S. Patent and Trademark Office; U. S. DEPARTMENT OF COMMERCE
Under the Paperwork Reduction Act of 1995, no persons are required to respond to a collection of information unless it displays a valid OMB control number.

RESCISSION OF PREVIOUS NONPUBLICATION REQUEST
(35 U.S.C. 122(b)(2)(B)(ii))
AND, IF APPLICABLE,
NOTICE OF FOREIGN FILING
(35 U.S.C. 122(b)(2)(B)(iii))

Send completed form to:
Mail Stop PG Pub
Commissioner for Patents
P.O. Box 1450
Alexandria, VA 22313-1450
FAX: (571) 273-8300

Application Number	12/070,742
Filing Date	02/20/2008
First Named Inventor	Peter John Cousins
Title	Front Contact Solar Cell With Formed Emitter
Atty Docket Number	10031.004200
Art Unit	1795
Examiner	not yet known

A request that the above-identified application not be published under 35 U.S.C. 122(b) (nonpublication request) was included with the above-identified application on filing pursuant to 35 U.S.C. 122(b)(2)(B)(i).
I hereby **rescind** the previous nonpublication request.

If a notice of foreign or international filing is or will be required by 35 U.S.C. 122(b)(2)(B)(iii) and 37 CFR 1.213(c), I hereby provide such notice. This notice is being provided no later than forty-five (**45**) days after the date of such foreign or international filing.

*If a notice of subsequent foreign or international filing required by 35 U.S.C. 122(b)(2)(B)(iii) and 37 CFR 1.213(c) was not filed within forty-five (**45**) days after the date of filing of the foreign or international application, the application is ABANDONED, and a petition to revive under 37 CFR 1.137(b) is required. See 37 CFR 1.137(f).*

/Patrick D. Benedicto, Reg. No. 40,909/	January 29, 2009
Signature	Date
PATRICK D. BENEDICTO	40,909
Typed or printed name	Registration Number, if applicable
408.436.2110	
Telephone Number	

This request must be signed in compliance with 37 CFR 1.33(b).

If information or assistance is needed in completing this form, please contact the Pre-Grant Publication Division at (703)605-4283 or by e-mail at PGPub@USPTO.gov.

CERTIFICATE OF MAILING OR TRANSMISSION

I hereby certify that this correspondence is being deposited with the United States Postal Service with sufficient postage as first class mail in an envelope addressed to: Mail Stop PG Pub, Commissioner for Patents, P.O. Box 1450, Alexandria, VA 22313-1450, or facsimile transmitted to the U.S. Patent and Trademark Office on the date shown below.

Signature

Name (Print/Type) | Date

This collection of information is required by 37 CFR 1.213(b). The information is required to obtain or retain a benefit by the public which is to file (and by the USPTO to process) an application. Confidentiality is governed by 35 U.S.C. 122 and 37 CFR 1.11 and 1.14. This collection is estimated to take 6 minutes to complete, including gathering, preparing, and submitting the completed application form to the USPTO. Time will vary depending upon the individual case. Any comments on the amount of time you require to complete this form and/or suggestions for reducing this burden, should be sent to the Chief Information Officer, U.S. Patent and Trademark Office, U.S. Department of Commerce, P.O. Box 1450, Alexandria, VA 22313-1450. DO NOT SEND FEES OR COMPLETED FORMS TO THIS ADDRESS. **SEND TO: Mail Stop PG Pub, Commissioner for Patents, P.O. Box 1450, Alexandria, VA 22313-1450.**

If you need assistance in completing the form, call 1-800-PTO-9199 and select option 2.

Electronic Acknowledgement Receipt

EFS ID:	4697560
Application Number:	12070742
International Application Number:	
Confirmation Number:	2015
Title of Invention:	Front contact solar cell with formed emitter
First Named Inventor/Applicant Name:	Peter John Cousins
Customer Number:	74254
Filer:	Patrick D. Benedicto/jina mangaoang
Filer Authorized By:	Patrick D. Benedicto
Attorney Docket Number:	10031.004200
Receipt Date:	29-JAN-2009
Filing Date:	20-FEB-2008
Time Stamp:	14:00:14
Application Type:	Utility under 35 USC 111(a)

Payment information:

Submitted with Payment	no

File Listing:

Document Number	Document Description	File Name	File Size(Bytes)/ Message Digest	Multi Part /.zip	Pages (if appl.)
1	Rescind Nonpublication Request for Pre Grant Pub	RescissionOfPreviousNonPublicationRequest-S0123.pdf	125853 9c1b147a951d404db92bca0c2f7e9ccc3fbf27dc	no	1

Warnings:

Information:

Total Files Size (in bytes):	125853

This Acknowledgement Receipt evidences receipt on the noted date by the USPTO of the indicated documents, characterized by the applicant, and including page counts, where applicable. It serves as evidence of receipt similar to a Post Card, as described in MPEP 503.

New Applications Under 35 U.S.C. 111
If a new application is being filed and the application includes the necessary components for a filing date (see 37 CFR 1.53(b)-(d) and MPEP 506), a Filing Receipt (37 CFR 1.54) will be issued in due course and the date shown on this Acknowledgement Receipt will establish the filing date of the application.

National Stage of an International Application under 35 U.S.C. 371
If a timely submission to enter the national stage of an international application is compliant with the conditions of 35 U.S.C. 371 and other applicable requirements a Form PCT/DO/EO/903 indicating acceptance of the application as a national stage submission under 35 U.S.C. 371 will be issued in addition to the Filing Receipt, in due course.

New International Application Filed with the USPTO as a Receiving Office
If a new international application is being filed and the international application includes the necessary components for an international filing date (see PCT Article 11 and MPEP 1810), a Notification of the International Application Number and of the International Filing Date (Form PCT/RO/105) will be issued in due course, subject to prescriptions concerning national security, and the date shown on this Acknowledgement Receipt will establish the international filing date of the application.

UNITED STATES PATENT AND TRADEMARK OFFICE

UNITED STATES DEPARTMENT OF COMMERCE
United States Patent and Trademark Office
Address: COMMISSIONER FOR PATENTS
P.O. Box 1450
Alexandria, Virginia 22313-1450
www.uspto.gov

APPLICATION NUMBER	FILING OR 371(C) DATE	FIRST NAMED APPLICANT	ATTY. DOCKET NO./TITLE
12/070,742	02/20/2008	Peter John Cousins	10031.004200

CONFIRMATION NO. 2015

74254
Okamoto & Benedicto LLP
P.O. Box 641330
San Jose, CA 95164-1330

NONPUBLICATION RESCISSION LETTER

OC000000034362651

Date Mailed: 02/04/2009

Communication Regarding Rescission Of Nonpublication Request and/or Notice of Foreign Filing

Applicant's rescission of the previously-filed nonpublication request and/or notice of foreign filing is acknowledged. The paper has been reflected in the Patent and Trademark Office's (USPTO's) computer records so that the earliest possible projected publication date can be assigned.

The projected publication date is 08/20/2009.

If applicant rescinded the nonpublication request before or on the date of "foreign filing,"[1] then no notice of foreign filing is required.

If applicant foreign filed the application after filing the above application and before filing the rescission, and the rescission did not also include a notice of foreign filing, then a notice of foreign filing (not merely a rescission) is required to be filed within 45 days of the date of foreign filing. See 35 U.S.C. § 122(b)(2)(B)(iii), and Clarification of the United States Patent and Trademark Office's Interpretation of the Provisions of 35 U.S.C. § 122(b)(2)(B)(ii)-(iv), 1272 Off. Gaz. Pat. Office 22 (July 1, 2003).

If a notice of foreign filing is required and is not filed within 45 days of the date of foreign filing, then the application becomes abandoned pursuant to 35 U.S.C. § 122(b)(2)(B)(iii). In this situation, applicant should either file a petition to revive or notify the Office that the application is abandoned. See 37 CFR 1.137(f). Any such petition to revive will be forwarded to the Office of Petitions for a decision. Note that the filing of the petition will not operate to stay any period of reply that may be running against the application.

Questions regarding petitions to revive should be directed to the Office of Petitions at (571) 272-3282.

[1] Note, for purpose of this notice, that "foreign filing" means "filing an application directed to the same invention in another country, or under a multilateral international agreement, that requires publication of applications 18 months after filing".

/hsarwari/

Office of Data Management, Application Assistance Unit (571) 272-4000, or (571) 272-4200, or 1-888-786-0101

PTO/SB/08a (03-09)
Approved for use through 03/31/2009. OMB 0651-0031
U.S. Patent and Trademark Office; U.S. DEPARTMENT OF COMMERCE

Under the Paperwork Reduction Act of 1995, no persons are required to respond to a collection of information unless it contains a valid OMB control number.

INFORMATION DISCLOSURE STATEMENT BY APPLICANT

(Not for submission under 37 CFR 1.99)

Application Number	12070742
Filing Date	2008-02-20
First Named Inventor	Peter John Cousins
Art Unit	1795
Examiner Name	not yet known
Attorney Docket Number	10031.004200

U.S.PATENTS Remove

Examiner Initial*	Cite No	Patent Number	Kind Code[1]	Issue Date	Name of Patentee or Applicant of cited Document	Pages,Columns,Lines where Relevant Passages or Relevant Figures Appear
	1	5266125		1993-11-30	Rand, et al.	
	2	6524880		2003-02-25	Moon, et al.	

If you wish to add additional U.S. Patent citation information please click the Add button. Add

U.S.PATENT APPLICATION PUBLICATIONS Remove

Examiner Initial*	Cite No	Publication Number	Kind Code[1]	Publication Date	Name of Patentee or Applicant of cited Document	Pages,Columns,Lines where Relevant Passages or Relevant Figures Appear
	1	20030134469		2003-07-17	Horzel, et al.	
	2	20060130891		2006-06-22	Carlson	
	3	20070082206		2007-04-12	Hartig	

If you wish to add additional U.S. Published Application citation information please click the Add button. Add

FOREIGN PATENT DOCUMENTS Remove

Examiner Initial*	Cite No	Foreign Document Number[3]	Country Code[2] ¡	Kind Code[4]	Publication Date	Name of Patentee or Applicant of cited Document	Pages,Columns,Lines where Relevant Passages or Relevant Figures Appear	T[5]

INFORMATION DISCLOSURE STATEMENT BY APPLICANT (Not for submission under 37 CFR 1.99)		
	Application Number	12070742
	Filing Date	2008-02-20
	First Named Inventor	Peter John Cousins
	Art Unit	1795
	Examiner Name	not yet known
	Attorney Docket Number	10031.004200

	1							☐

If you wish to add additional Foreign Patent Document citation information please click the Add button Add

NON-PATENT LITERATURE DOCUMENTS Remove

Examiner Initials*	Cite No	Include name of the author (in CAPITAL LETTERS), title of the article (when appropriate), title of the item (book, magazine, journal, serial, symposium, catalog, etc), date, pages(s), volume-issue number(s), publisher, city and/or country where published.	T[5]
	1	PCT International Search Report for Application No. PCT/US09/32345, 23 March 2009, 2 sheets.	☐

If you wish to add additional non-patent literature document citation information please click the Add button Add

EXAMINER SIGNATURE

Examiner Signature		Date Considered	

*EXAMINER: Initial if reference considered, whether or not citation is in conformance with MPEP 609. Draw line through a citation if not in conformance and not considered. Include copy of this form with next communication to applicant.

[1] See Kind Codes of USPTO Patent Documents at www.USPTO.GOV or MPEP 901.04. [2] Enter office that issued the document, by the two-letter code (WIPO Standard ST.3). [3] For Japanese patent documents, the indication of the year of the reign of the Emperor must precede the serial number of the patent document. [4] Kind of document by the appropriate symbols as indicated on the document under WIPO Standard ST.16 if possible. [5] Applicant is to place a check mark here if English language translation is attached.

INFORMATION DISCLOSURE STATEMENT BY APPLICANT (Not for submission under 37 CFR 1.99)	Application Number	12070742
	Filing Date	2008-02-20
	First Named Inventor	Peter John Cousins
	Art Unit	1795
	Examiner Name	not yet known
	Attorney Docket Number	10031.004200

CERTIFICATION STATEMENT

Please see 37 CFR 1.97 and 1.98 to make the appropriate selection(s):

☒ That each item of information contained in the information disclosure statement was first cited in any communication from a foreign patent office in a counterpart foreign application not more than three months prior to the filing of the information disclosure statement. See 37 CFR 1.97(e)(1).

OR

☐ That no item of information contained in the information disclosure statement was cited in a communication from a foreign patent office in a counterpart foreign application, and, to the knowledge of the person signing the certification after making reasonable inquiry, no item of information contained in the information disclosure statement was known to any individual designated in 37 CFR 1.56(c) more than three months prior to the filing of the information disclosure statement. See 37 CFR 1.97(e)(2).

☐ See attached certification statement.

☐ Fee set forth in 37 CFR 1.17 (p) has been submitted herewith.

☐ None

SIGNATURE

A signature of the applicant or representative is required in accordance with CFR 1.33, 10.18. Please see CFR 1.4(d) for the form of the signature.

Signature	/Patrick D. Benedicto, Reg. No. 40,909/	Date (YYYY-MM-DD)	2009-03-27
Name/Print	PATRICK D. BENEDICTO	Registration Number	40909

This collection of information is required by 37 CFR 1.97 and 1.98. The information is required to obtain or retain a benefit by the public which is to file (and by the USPTO to process) an application. Confidentiality is governed by 35 U.S.C. 122 and 37 CFR 1.14. This collection is estimated to take 1 hour to complete, including gathering, preparing and submitting the completed application form to the USPTO. Time will vary depending upon the individual case. Any comments on the amount of time you require to complete this form and/or suggestions for reducing this burden, should be sent to the Chief Information Officer, U.S. Patent and Trademark Office, U.S. Department of Commerce, P.O. Box 1450, Alexandria, VA 22313-1450. DO NOT SEND FEES OR COMPLETED FORMS TO THIS ADDRESS. **SEND TO: Commissioner for Patents, P.O. Box 1450, Alexandria, VA 22313-1450.**

Privacy Act Statement

The Privacy Act of 1974 (P.L. 93-579) requires that you be given certain information in connection with your submission of the attached form related to a patent application or patent. Accordingly, pursuant to the requirements of the Act, please be advised that: (1) the general authority for the collection of this information is 35 U.S.C. 2(b)(2); (2) furnishing of the information solicited is voluntary; and (3) the principal purpose for which the information is used by the U.S. Patent and Trademark Office is to process and/or examine your submission related to a patent application or patent. If you do not furnish the requested information, the U.S. Patent and Trademark Office may not be able to process and/or examine your submission, which may result in termination of proceedings or abandonment of the application or expiration of the patent.

The information provided by you in this form will be subject to the following routine uses:

1. The information on this form will be treated confidentially to the extent allowed under the Freedom of Information Act (5 U.S.C. 552) and the Privacy Act (5 U.S.C. 552a). Records from this system of records may be disclosed to the Department of Justice to determine whether the Freedom of Information Act requires disclosure of these record s.

2. A record from this system of records may be disclosed, as a routine use, in the course of presenting evidence to a court, magistrate, or administrative tribunal, including disclosures to opposing counsel in the course of settlement negotiations.

3. A record in this system of records may be disclosed, as a routine use, to a Member of Congress submitting a request involving an individual, to whom the record pertains, when the individual has requested assistance from the Member with respect to the subject matter of the record.

4. A record in this system of records may be disclosed, as a routine use, to a contractor of the Agency having need for the information in order to perform a contract. Recipients of information shall be required to comply with the requirements of the Privacy Act of 1974, as amended, pursuant to 5 U.S.C. 552a(m).

5. A record related to an International Application filed under the Patent Cooperation Treaty in this system of records may be disclosed, as a routine use, to the International Bureau of the World Intellectual Property Organization, pursuant to the Patent Cooperation Treaty.

6. A record in this system of records may be disclosed, as a routine use, to another federal agency for purposes of National Security review (35 U.S.C. 181) and for review pursuant to the Atomic Energy Act (42 U.S.C. 218(c)).

7. A record from this system of records may be disclosed, as a routine use, to the Administrator, General Services, or his/her designee, during an inspection of records conducted by GSA as part of that agency's responsibility to recommend improvements in records management practices and programs, under authority of 44 U.S.C. 2904 and 2906. Such disclosure shall be made in accordance with the GSA regulations governing inspection of records for this purpose, and any other relevant (i.e., GSA or Commerce) directive. Such disclosure shall not be used to make determinations about individuals.

8. A record from this system of records may be disclosed, as a routine use, to the public after either publication of the application pursuant to 35 U.S.C. 122(b) or issuance of a patent pursuant to 35 U.S.C. 151. Further, a record may be disclosed, subject to the limitations of 37 CFR 1.14, as a routine use, to the public if the record was filed in an application which became abandoned or in which the proceedings were terminated and which application is referenced by either a published application, an application open to public inspections or an issued patent.

9. A record from this system of records may be disclosed, as a routine use, to a Federal, State, or local law enforcement agency, if the USPTO becomes aware of a violation or potential violation of law or regulation.

PATENT COOPERATION TREATY

PCT

INTERNATIONAL SEARCH REPORT

(PCT Article 18 and Rules 43 and 44)

Applicant's or agent's file reference 31.004200-PC	**FOR FURTHER ACTION**	see Form PCT/ISA/220 as well as, where applicable, item 5 below.
International application No. PCT/US 09/32345	International filing date *(day/month/year)* 29 January 2009 (29.01.2009)	(Earliest) Priority Date *(day/month/year)* 20 February 2008 (20.02.2008)
Applicant SUNPOWER CORPORATION		

This international search report has been prepared by this International Searching Authority and is transmitted to the applicant according to Article 18. A copy is being transmitted to the International Bureau.

This international search report consists of a total of 2 sheets.

☐ It is also accompanied by a copy of each prior art document cited in this report.

1. **Basis of the report**
   a. With regard to the **language**, the international search was carried out on the basis of:
      ☒ the international application in the language in which it was filed.
      ☐ a translation of the international application into _____ which is the language of a translation furnished for the purposes of international search (Rules 12.3(a) and 23.1(b)).
   b. ☐ This international search report has been established taking into account the **rectification of an obvious mistake** authorized by or notified to this Authority under Rule 91 (Rule 43.6*bis*(a)).
   c. ☐ With regard to any **nucleotide and/or amino acid sequence** disclosed in the international application, see Box No. I.

2. ☐ **Certain claims were found unsearchable** (see Box No. II).

3. ☐ **Unity of invention is lacking** (see Box No. III).

4. With regard to the **title**,
   ☒ the text is approved as submitted by the applicant.
   ☐ the text has been established by this Authority to read as follows:

5. With regard to the **abstract**,
   ☒ the text is approved as submitted by the applicant.
   ☐ the text has been established, according to Rule 38.2(b), by this Authority as it appears in Box No. IV. The applicant may, within one month from the date of mailing of this international search report, submit comments to this Authority.

6. With regard to the **drawings**,
   a. the figure of the **drawings** to be published with the abstract is Figure No. 1
      ☒ as suggested by the applicant.
      ☐ as selected by this Authority, because the applicant failed to suggest a figure.
      ☐ as selected by this Authority, because this figure better characterizes the invention.
   b. ☐ none of the figures is to be published with the abstract.

Form PCT/ISA/210 (first sheet) (April 2007)

INTERNATIONAL SEARCH REPORT

International application No.
PCT/US 09/32345

A. CLASSIFICATION OF SUBJECT MATTER
IPC(8) - H01L 31/00 (2009.01)
USPC - 136/252, 261
According to International Patent Classification (IPC) or to both national classification and IPC

B. FIELDS SEARCHED

Minimum documentation searched (classification system followed by classification symbols)
IPC(8) - H01L 31/00 (2009.01)
USPC - 136/252, 261

Documentation searched other than minimum documentation to the extent that such documents are included in the fields searched
IPC(8) - H01L 31/00 (2009.01), USPC - 136/252, 261: keyword search, as below

Electronic data base consulted during the international search (name of data base and, where practicable, search terms used)
Google Scholar, USPTO West (databases: PGPB,USPT,USOC,EPAB,JPAB) - Search Terms: solar, photovoltaic, cell, array, element, unit, device, panel, lateral, conductivity, p-type, n-type, dopant, silicon, wafer, crystalline, polysilicon, texture, rough, prismatic, triangular, pyramid, faceted, reflective, silver, infra-red

C. DOCUMENTS CONSIDERED TO BE RELEVANT

Category*	Citation of document, with indication, where appropriate, of the relevant passages	Relevant to claim No.
X --- Y	US 2003/0134469 A1 (HORZEL et al.) 17 July 2003 (17.07.2003); abstract, para [0002]; [0007]; [0013]; [0022]; [0024]; [0025]; [0035]; [0036]; [0038]; [0047]	1-4, 8, 17-19 ---------- 5-7, 9-16, 20
Y	US 5,266,125 A (RAND et al.) 30 November 1993 (30.11.1993); abstract	5
Y	US 2007/0082206 A1 (HARTIG) 12 April 2007 (12.04.2007); para [0014]	6, 7, 20
Y	US 2006/0130891 A1 (CARLSON) 22 June 2006 (22.06.2006); para [0030]	9-16
Y	US 6,524,880 B2 (MOON et al.) 25 February 2003 (25.02.2003); col 2, ln 21-23	10, 12

☐ Further documents are listed in the continuation of Box C. ☐

* Special categories of cited documents:
"A" document defining the general state of the art which is not considered to be of particular relevance
"E" earlier application or patent but published on or after the international filing date
"L" document which may throw doubts on priority claim(s) or which is cited to establish the publication date of another citation or other special reason (as specified)
"O" document referring to an oral disclosure, use, exhibition or other means
"P" document published prior to the international filing date but later than the priority date claimed
"T" later document published after the international filing date or priority date and not in conflict with the application but cited to understand the principle or theory underlying the invention
"X" document of particular relevance; the claimed invention cannot be considered novel or cannot be considered to involve an inventive step when the document is taken alone
"Y" document of particular relevance; the claimed invention cannot be considered to involve an inventive step when the document is combined with one or more other such documents, such combination being obvious to a person skilled in the art
"&" document member of the same patent family

Date of the actual completion of the international search	Date of mailing of the international search report
9 March 2009 (09.03.2009)	26 MAR 2009
Name and mailing address of the ISA/US Mail Stop PCT, Attn: ISA/US, Commissioner for Patents P.O. Box 1450, Alexandria, Virginia 22313-1450 Facsimile No. 571-273-3201	Authorized officer: Lee W. Young PCT Helpdesk: 571-272-4300 PCT OSP: 571-272-7774

Form PCT/ISA/210 (second sheet) (April 2007)

Electronic Acknowledgement Receipt

EFS ID:	5052160
Application Number:	12070742
International Application Number:	
Confirmation Number:	2015
Title of Invention:	Front contact solar cell with formed emitter
First Named Inventor/Applicant Name:	Peter John Cousins
Customer Number:	74254
Filer:	Patrick D. Benedicto/jina mangaoang
Filer Authorized By:	Patrick D. Benedicto
Attorney Docket Number:	10031.004200
Receipt Date:	27-MAR-2009
Filing Date:	20-FEB-2008
Time Stamp:	17:08:55
Application Type:	Utility under 35 USC 111(a)

Payment information:

Submitted with Payment	no

File Listing:

Document Number	Document Description	File Name	File Size(Bytes)/ Message Digest	Multi Part /.zip	Pages (if appl.)
1	Information Disclosure Statement (IDS) Filed (SB/08)	IDS_SB-08a.pdf	608414 a561ba542e742728b932e8ae656d3c3986cb3382	no	4

Warnings:

Information:

2	NPL Documents	NPL-ref1.pdf	206107 afe2891f3ce7f902fb677e0935c629a95fa8ebf8	no	2

Warnings:

Information:

Total Files Size (in bytes):	814521

This Acknowledgement Receipt evidences receipt on the noted date by the USPTO of the indicated documents, characterized by the applicant, and including page counts, where applicable. It serves as evidence of receipt similar to a Post Card, as described in MPEP 503.

New Applications Under 35 U.S.C. 111
If a new application is being filed and the application includes the necessary components for a filing date (see 37 CFR 1.53(b)-(d) and MPEP 506), a Filing Receipt (37 CFR 1.54) will be issued in due course and the date shown on this Acknowledgement Receipt will establish the filing date of the application.

National Stage of an International Application under 35 U.S.C. 371
If a timely submission to enter the national stage of an international application is compliant with the conditions of 35 U.S.C. 371 and other applicable requirements a Form PCT/DO/EO/903 indicating acceptance of the application as a national stage submission under 35 U.S.C. 371 will be issued in addition to the Filing Receipt, in due course.

New International Application Filed with the USPTO as a Receiving Office
If a new international application is being filed and the international application includes the necessary components for an international filing date (see PCT Article 11 and MPEP 1810), a Notification of the International Application Number and of the International Filing Date (Form PCT/RO/105) will be issued in due course, subject to prescriptions concerning national security, and the date shown on this Acknowledgement Receipt will establish the international filing date of the application.

UNITED STATES PATENT AND TRADEMARK OFFICE

UNITED STATES DEPARTMENT OF COMMERCE
United States Patent and Trademark Office
Address: COMMISSIONER FOR PATENTS
P.O. Box 1450
Alexandria, Virginia 22313-1450
www.uspto.gov

APPLICATION NUMBER	FILING OR 371(C) DATE	FIRST NAMED APPLICANT	ATTY. DOCKET NO./TITLE
12/070,742	02/20/2008	Peter John Cousins	10031.004200

CONFIRMATION NO. 2015

PUBLICATION NOTICE

OC000000037436237

74254
Okamoto & Benedicto LLP
P.O. Box 641330
San Jose, CA 95164-1330

Title: Front contact solar cell with formed emitter

Publication No.US-2009-0205712-A1
Publication Date:08/20/2009

NOTICE OF PUBLICATION OF APPLICATION

The above-identified application will be electronically published as a patent application publication pursuant to 37 CFR 1.211, et seq. The patent application publication number and publication date are set forth above.

The publication may be accessed through the USPTO's publically available Searchable Databases via the Internet at www.uspto.gov. The direct link to access the publication is currently http://www.uspto.gov/patft/.

The publication process established by the Office does not provide for mailing a copy of the publication to applicant. A copy of the publication may be obtained from the Office upon payment of the appropriate fee set forth in 37 CFR 1.19(a)(1). Orders for copies of patent application publications are handled by the USPTO's Office of Public Records. The Office of Public Records can be reached by telephone at (703) 308-9726 or (800) 972-6382, by facsimile at (703) 305-8759, by mail addressed to the United States Patent and Trademark Office, Office of Public Records, Alexandria, VA 22313-1450 or via the Internet.

In addition, information on the status of the application, including the mailing date of Office actions and the dates of receipt of correspondence filed in the Office, may also be accessed via the Internet through the Patent Electronic Business Center at www.uspto.gov using the public side of the Patent Application Information and Retrieval (PAIR) system. The direct link to access this status information is currently http://pair.uspto.gov/. Prior to publication, such status information is confidential and may only be obtained by applicant using the private side of PAIR.

Further assistance in electronically accessing the publication, or about PAIR, is available by calling the Patent Electronic Business Center at 1-866-217-9197.

Office of Data Managment, Application Assistance Unit (571) 272-4000, or (571) 272-4200, or 1-888-786-0101

UNITED STATES PATENT AND TRADEMARK OFFICE

UNITED STATES DEPARTMENT OF COMMERCE
United States Patent and Trademark Office
Address: COMMISSIONER FOR PATENTS
P.O. Box 1450
Alexandria, Virginia 22313-1450
www.uspto.gov

APPLICATION NO.	FILING DATE	FIRST NAMED INVENTOR	ATTORNEY DOCKET NO.	CONFIRMATION NO.
12/070,742	02/20/2008	Peter John Cousins	10031.004200	2015

74254 7590 11/05/2009
Okamoto & Benedicto LLP
P.O. Box 641330
San Jose, CA 95164-1330

EXAMINER
PILLAY, DEVINA

ART UNIT	PAPER NUMBER
1795	

MAIL DATE	DELIVERY MODE
11/05/2009	PAPER

Please find below and/or attached an Office communication concerning this application or proceeding.

The time period for reply, if any, is set in the attached communication.

Office Action Summary	Application No.	Applicant(s)	
	12/070,742	COUSINS, PETER JOHN	
	Examiner	Art Unit	
	Devina Pillay	1795	

-- The MAILING DATE of this communication appears on the cover sheet with the correspondence address --

Period for Reply

A SHORTENED STATUTORY PERIOD FOR REPLY IS SET TO EXPIRE 1 MONTH(S) OR THIRTY (30) DAYS, WHICHEVER IS LONGER, FROM THE MAILING DATE OF THIS COMMUNICATION.

- Extensions of time may be available under the provisions of 37 CFR 1.136(a). In no event, however, may a reply be timely filed after SIX (6) MONTHS from the mailing date of this communication.
- If NO period for reply is specified above, the maximum statutory period will apply and will expire SIX (6) MONTHS from the mailing date of this communication.
- Failure to reply within the set or extended period for reply will, by statute, cause the application to become ABANDONED (35 U.S.C. § 133). Any reply received by the Office later than three months after the mailing date of this communication, even if timely filed, may reduce any earned patent term adjustment. See 37 CFR 1.704(b).

Status

1)☒ Responsive to communication(s) filed on 02/20/2008.

2a)☐ This action is **FINAL**. 2b)☒ This action is non-final.

3)☐ Since this application is in condition for allowance except for formal matters, prosecution as to the merits is closed in accordance with the practice under *Ex parte Quayle*, 1935 C.D. 11, 453 O.G. 213.

Disposition of Claims

4)☒ Claim(s) 1-20 is/are pending in the application.

4a) Of the above claim(s) _____ is/are withdrawn from consideration.

5)☐ Claim(s) _____ is/are allowed.

6)☐ Claim(s) _____ is/are rejected.

7)☐ Claim(s) _____ is/are objected to.

8)☒ Claim(s) 1-20 are subject to restriction and/or election requirement.

Application Papers

9)☐ The specification is objected to by the Examiner.

10)☐ The drawing(s) filed on _____ is/are: a)☐ accepted or b)☐ objected to by the Examiner.

Applicant may not request that any objection to the drawing(s) be held in abeyance. See 37 CFR 1.85(a).

Replacement drawing sheet(s) including the correction is required if the drawing(s) is objected to. See 37 CFR 1.121(d).

11)☐ The oath or declaration is objected to by the Examiner. Note the attached Office Action or form PTO-152.

Priority under 35 U.S.C. § 119

12)☐ Acknowledgment is made of a claim for foreign priority under 35 U.S.C. § 119(a)-(d) or (f).

a)☐ All b)☐ Some * c)☐ None of:

1.☐ Certified copies of the priority documents have been received.

2.☐ Certified copies of the priority documents have been received in Application No. _____.

3.☐ Copies of the certified copies of the priority documents have been received in this National Stage application from the International Bureau (PCT Rule 17.2(a)).

* See the attached detailed Office action for a list of the certified copies not received.

Attachment(s)

1) ☐ Notice of References Cited (PTO-892)
2) ☐ Notice of Draftsperson's Patent Drawing Review (PTO-948)
3) ☐ Information Disclosure Statement(s) (PTO/SB/08) Paper No(s)/Mail Date _____.
4) ☐ Interview Summary (PTO-413) Paper No(s)/Mail Date. _____ .
5) ☐ Notice of Informal Patent Application
6) ☐ Other: _____.

DETAILED ACTION

Election/Restrictions

1. Restriction to one of the following inventions is required under 35 U.S.C. 121:

   I. Claims 1-8 and 17-20, drawn to a solar cell, classified in class 136, subclass 261.

   II. Claims 9-16, drawn to a method of making a solar cell, classified in class 438, subclass 69.

The inventions are distinct, each from the other because of the following reasons:

2. Inventions II and I are related as process of making and product made. The inventions are distinct if either or both of the following can be shown: (1) that the process as claimed can be used to make another and materially different product or (2) that the product as claimed can be made by another and materially different process (MPEP § 806.05(f)). In the instant case the product as claimed can be made by another and materially different process. For example the product can be made by a process that does not involve providing a capping layer.

3. Restriction for examination purposes as indicated is proper because all these inventions listed in this action are independent or distinct for the reasons given above <u>and</u> there would be a serious search and examination burden if restriction were not required because one or more of the following reasons apply:

   (a) the inventions have acquired a separate status in the art in view of their different classification;

(b) the inventions have acquired a separate status in the art due to their recognized divergent subject matter;

(c) the inventions require a different field of search (for example, searching different classes/subclasses or electronic resources, or employing different search queries);

(d) the prior art applicable to one invention would not likely be applicable to another invention;

(e) the inventions are likely to raise different non-prior art issues under 35 U.S.C. 101 and/or 35 U.S.C. 112, first paragraph.

Applicant is advised that the reply to this requirement to be complete must include (i) an election of a invention to be examined even though the requirement may be traversed (37 CFR 1.143) **and (ii) identification of the claims encompassing the elected invention**.

The election of an invention may be made with or without traverse. To reserve a right to petition, the election must be made with traverse. If the reply does not distinctly and specifically point out supposed errors in the restriction requirement, the election shall be treated as an election without traverse. Traversal must be presented at the time of election in order to be considered timely. Failure to timely traverse the requirement will result in the loss of right to petition under 37 CFR 1.144. If claims are added after the election, applicant must indicate which of these claims are readable on the elected invention.

If claims are added after the election, applicant must indicate which of these claims are readable upon the elected invention.

Should applicant traverse on the ground that the inventions are not patentably distinct, applicant should submit evidence or identify such evidence now of record showing the inventions to be obvious variants or clearly admit on the record that this is the case. In either instance, if the examiner finds one of the inventions unpatentable over the prior art, the evidence or admission may be used in a rejection under 35 U.S.C. 103(a) of the other invention.

4. A telephone call was made to Patrick Benedicto on 10/21/09 to request an oral election to the above restriction requirement, but did not result in an election being made.

5. The examiner has required restriction between product and process claims. Where applicant elects claims directed to the product, and the product claims are subsequently found allowable, withdrawn process claims that depend from or otherwise require all the limitations of the allowable product claim will be considered for rejoinder. All claims directed to a nonelected process invention must require all the limitations of an allowable product claim for that process invention to be rejoined.

In the event of rejoinder, the requirement for restriction between the product claims and the rejoined process claims will be withdrawn, and the rejoined process claims will be fully examined for patentability in accordance with 37 CFR 1.104. Thus, to be allowable, the rejoined claims must meet all criteria for patentability including the requirements of 35 U.S.C. 101, 102, 103 and 112. Until all claims to the elected product

are found allowable, an otherwise proper restriction requirement between product claims and process claims may be maintained. Withdrawn process claims that are not commensurate in scope with an allowable product claim will not be rejoined. See MPEP § 821.04(b). Additionally, in order to retain the right to rejoinder in accordance with the above policy, applicant is advised that the process claims should be amended during prosecution to require the limitations of the product claims. **Failure to do so may result in a loss of the right to rejoinder**. Further, note that the prohibition against double patenting rejections of 35 U.S.C. 121 does not apply where the restriction requirement is withdrawn by the examiner before the patent issues. See MPEP § 804.01.

6. Any inquiry concerning this communication or earlier communications from the examiner should be directed to Devina Pillay whose telephone number is (571)270-1180. The examiner can normally be reached on Monday thru Friday 7:30am -5:00pm (EST).

If attempts to reach the examiner by telephone are unsuccessful, the examiner's supervisor, Basia Ridley can be reached on 571-272-1453. The fax phone number for the organization where this application or proceeding is assigned is 571-273-8300.

Information regarding the status of an application may be obtained from the Patent Application Information Retrieval (PAIR) system. Status information for published applications may be obtained from either Private PAIR or Public PAIR. Status information for unpublished applications is available through Private PAIR only. For more information about the PAIR system, see http://pair-direct.uspto.gov. Should you have questions on access to the Private PAIR system, contact the Electronic Business Center (EBC) at 866-217-9197 (toll-free). If you would like assistance from a USPTO Customer Service Representative or access to the automated information system, call 800-786-9199 (IN USA OR CANADA) or 571-272-1000.

/D. P./
Examiner, Art Unit 1795

/Jeffrey T. Barton/
Primary Examiner, Art Unit 1795
3 November 2009

Index of Claims	Application/Control No.	Applicant(s)/Patent Under Reexamination
	12070742	COUSINS, PETER JOHN
	Examiner	**Art Unit**
	Devina Pillay	1795

✓	Rejected	-	Cancelled	N	Non-Elected	A	Appeal
=	Allowed	÷	Restricted	I	Interference	O	Objected

☐ Claims renumbered in the same order as presented by applicant ☐ CPA ☐ T.D. ☐ R.1.47

CLAIM		DATE								
Final	Original	10/21/2009								
	1	÷								
	2	÷								
	3	÷								
	4	÷								
	5	÷								
	6	÷								
	7	÷								
	8	÷								
	9	÷								
	10	÷								
	11	÷								
	12	÷								
	13	÷								
	14	÷								
	15	÷								
	16	÷								
	17	÷								
	18	÷								
	19	÷								
	20	÷								

IN THE UNITED STATES PATENT AND TRADEMARK OFFICE

In re Application of:

Peter John Cousins

Application No.	12/070,742	Examiner:	Pillay, Devina
Filing Date:	February 20, 2008	Art Unit:	1795

Title: FRONT CONTACT SOLAR CELL WITH FORMED EMITTER

Honorable Commissioner for Patents
P.O. Box 1450
Alexandria, VA 22313-1450

RESPONSE TO RESTRICTION/ELECTION REQUIREMENT AND AMENDMENT

Sir:

This submission is responsive to the Office Action mailed on November 5, 2009 ("last Office Action").

Please amend the above-identified application as follows:

AMENDMENT TO THE CLAIMS

1. (original) A solar cell having a front side facing the sun to collect solar radiation during normal operation and a backside opposite the front side, the solar cell comprising:

an N-type silicon substrate;

a textured surface on the N-type silicon substrate on the front side of the solar cell;

an antireflective layer over the textured surface of the N-type silicon substrate;

a P-type polysilicon emitter forming a backside junction with the N-type silicon substrate;

a negative polarity metal contact making an electrical connection to the N-type silicon substrate from the front side of the solar cell; and

a positive polarity metal contact making an electrical connection to the P-type polysilicon emitter from the backside of the solar cell.

2. (original) The solar cell of claim 1 wherein the antireflective layer comprises a layer of silicon nitride.

3. (original) The solar cell of claim 1 further comprising a dielectric layer over the P-type polysilicon emitter.

4. (original) The solar cell of claim 3 wherein the dielectric layer comprises silicon dioxide.

5. (original) The solar cell of claim 3 further comprising a trench cutting through the dielectric layer and the P-type polysilicon emitter and into a portion of the N-type silicon substrate on the backside of the solar cell.

6. (original) The solar cell of claim 1wherein the positive polarity metal contact comprises a metal forming an infrared reflecting layer with a dielectric layer.

7. (original) The solar cell of claim 1 wherein the positive polarity metal contact comprises silver forming an infrared reflecting layer with a dielectric layer comprising silicon dioxide.

8. (original) The solar cell of claim 1 wherein the negative polarity metal contact comprises a metal formed in a contact hole to the N-type silicon substrate.

9. (cancelled)

10. (cancelled)

11. (cancelled)

12. (cancelled)

13. (cancelled)

14. (cancelled)

15. (cancelled)

16. (cancelled)

17. (original) A solar cell having a front side facing the sun to collect solar radiation during normal operation and a backside opposite the front side, the solar cell comprising:

a substrate having a textured front surface;

an emitter layer formed over a back surface of the substrate, the emitter layer forming a backside junction with the substrate;

a first metal contact making an electrical connection to the substrate on the front side of the solar cell; and

a second metal contact making an electrical connection to the emitter layer on the backside of the solar cell, the first metal contact and the second metal contact being configured to allow an external electrical circuit to be powered by the solar cell.

18. (original) The solar cell of claim 17 further comprising an antireflective layer over the textured front surface of the substrate.

19. (original) The solar cell of claim 17 wherein the substrate comprises an N-type silicon substrate and the emitter layer comprises a P-type doped polysilicon.

20. (original) The solar cell of claim 17 wherein the second metal contact comprises silver formed over a layer of silicon dioxide.

REMARKS

Claims 9-16 have been cancelled without prejudice. Thus, with the above amendments, claims 1-8 and 17-20 remain in the present application.

In response to the restriction requirement of the last Office Action, Applicant hereby elects Group I, claims 1-8 and 17-20. The election is being made without traverse to expedite prosecution of the pending claims. Accordingly, claims 9-16 have been cancelled. Applicant reserves the right to pursue the aforementioned cancelled claims in a divisional or continuing application.

The Examiner is invited to call the undersigned for any questions. Favorable action is respectfully solicited.

Respectfully submitted,
Peter John Cousins

Dated: December 1, 2009

/Patrick D. Benedicto/

Patrick D. Benedicto, Reg. No. 40,909
Okamoto & Benedicto LLP
P.O. Box 641330
San Jose, CA 95164
Tel.: (408)436-2110
Fax.: (408)436-2114

Electronic Acknowledgement Receipt

EFS ID:	6547149
Application Number:	12070742
International Application Number:	
Confirmation Number:	2015
Title of Invention:	Front contact solar cell with formed emitter
First Named Inventor/Applicant Name:	Peter John Cousins
Customer Number:	74254
Filer:	Patrick D. Benedicto/jina mangaoang
Filer Authorized By:	Patrick D. Benedicto
Attorney Docket Number:	10031.004200
Receipt Date:	01-DEC-2009
Filing Date:	20-FEB-2008
Time Stamp:	13:50:57
Application Type:	Utility under 35 USC 111(a)

Payment information:

Submitted with Payment	no

File Listing:

Document Number	Document Description	File Name	File Size(Bytes)/ Message Digest	Multi Part /.zip	Pages (if appl.)
1		S0123-RRRmailed05Nov2009.pdf	227001 baa02bb100d734bfd78b8fa93329c3833143d8ff	yes	4

	Multipart Description/PDF files in .zip description		
	Document Description	**Start**	**End**
	Response to Election / Restriction Filed	1	1
	Claims	2	3
	Applicant Arguments/Remarks Made in an Amendment	4	4

Warnings:

Information:

Total Files Size (in bytes):	227001

This Acknowledgement Receipt evidences receipt on the noted date by the USPTO of the indicated documents, characterized by the applicant, and including page counts, where applicable. It serves as evidence of receipt similar to a Post Card, as described in MPEP 503.

New Applications Under 35 U.S.C. 111
If a new application is being filed and the application includes the necessary components for a filing date (see 37 CFR 1.53(b)-(d) and MPEP 506), a Filing Receipt (37 CFR 1.54) will be issued in due course and the date shown on this Acknowledgement Receipt will establish the filing date of the application.

National Stage of an International Application under 35 U.S.C. 371
If a timely submission to enter the national stage of an international application is compliant with the conditions of 35 U.S.C. 371 and other applicable requirements a Form PCT/DO/EO/903 indicating acceptance of the application as a national stage submission under 35 U.S.C. 371 will be issued in addition to the Filing Receipt, in due course.

New International Application Filed with the USPTO as a Receiving Office
If a new international application is being filed and the international application includes the necessary components for an international filing date (see PCT Article 11 and MPEP 1810), a Notification of the International Application Number and of the International Filing Date (Form PCT/RO/105) will be issued in due course, subject to prescriptions concerning national security, and the date shown on this Acknowledgement Receipt will establish the international filing date of the application.

PTO/SB/06 (07-06)
Approved for use through 1/31/2007. OMB 0651-0032
U.S. Patent and Trademark Office; U.S. DEPARTMENT OF COMMERCE
Under the Paperwork Reduction Act of 1995, no persons are required to respond to a collection of information unless it displays a valid OMB control number.

PATENT APPLICATION FEE DETERMINATION RECORD

Substitute for Form PTO-875

Application or Docket Number	Filing Date	☐ To be Mailed
12/070,742	02/20/2008	

APPLICATION AS FILED – PART I

FOR	(Column 1) NUMBER FILED	(Column 2) NUMBER EXTRA	SMALL ENTITY ☐ RATE ($)	SMALL ENTITY FEE ($)	OR	OTHER THAN SMALL ENTITY RATE ($)	OTHER THAN SMALL ENTITY FEE ($)
☐ BASIC FEE (37 CFR 1.16(a), (b), or (c))	N/A	N/A	N/A			N/A	
☐ SEARCH FEE (37 CFR 1.16(k), (i), or (m))	N/A	N/A	N/A			N/A	
☐ EXAMINATION FEE (37 CFR 1.16(o), (p), or (q))	N/A	N/A	N/A			N/A	
TOTAL CLAIMS (37 CFR 1.16(i))	minus 20 =	*	X $ =		OR	X $ =	
INDEPENDENT CLAIMS (37 CFR 1.16(h))	minus 3 =	*	X $ =			X $ =	
☐ APPLICATION SIZE FEE (37 CFR 1.16(s))	If the specification and drawings exceed 100 sheets of paper, the application size fee due is $250 ($125 for small entity) for each additional 50 sheets or fraction thereof. See 35 U.S.C. 41(a)(1)(G) and 37 CFR 1.16(s).						
☐ MULTIPLE DEPENDENT CLAIM PRESENT (37 CFR 1.16(j))							
* If the difference in column 1 is less than zero, enter "0" in column 2.			TOTAL			TOTAL	

APPLICATION AS AMENDED – PART II

AMENDMENT 12/01/2009	(Column 1) CLAIMS REMAINING AFTER AMENDMENT		(Column 2) HIGHEST NUMBER PREVIOUSLY PAID FOR	(Column 3) PRESENT EXTRA	SMALL ENTITY RATE ($)	SMALL ENTITY ADDITIONAL FEE ($)	OR	OTHER THAN SMALL ENTITY RATE ($)	OTHER THAN SMALL ENTITY ADDITIONAL FEE ($)
Total (37 CFR 1.16(i))	* 12	Minus	** 20	= 0	X $ =		OR	X $52=	0
Independent (37 CFR 1.16(h))	* 2	Minus	***3	= 0	X $ =		OR	X $220=	0
☐ Application Size Fee (37 CFR 1.16(s))									
☐ FIRST PRESENTATION OF MULTIPLE DEPENDENT CLAIM (37 CFR 1.16(j))							OR		
					TOTAL ADD'L FEE		OR	TOTAL ADD'L FEE	0

AMENDMENT	(Column 1) CLAIMS REMAINING AFTER AMENDMENT		(Column 2) HIGHEST NUMBER PREVIOUSLY PAID FOR	(Column 3) PRESENT EXTRA	RATE ($)	ADDITIONAL FEE ($)		RATE ($)	ADDITIONAL FEE ($)
Total (37 CFR 1.16(i))	*	Minus	**	=	X $ =		OR	X $ =	
Independent (37 CFR 1.16(h))	*	Minus	***	=	X $ =		OR	X $ =	
☐ Application Size Fee (37 CFR 1.16(s))									
☐ FIRST PRESENTATION OF MULTIPLE DEPENDENT CLAIM (37 CFR 1.16(j))							OR		
					TOTAL ADD'L FEE		OR	TOTAL ADD'L FEE	

* If the entry in column 1 is less than the entry in column 2, write "0" in column 3.
** If the "Highest Number Previously Paid For" IN THIS SPACE is less than 20, enter "20".
*** If the "Highest Number Previously Paid For" IN THIS SPACE is less than 3, enter "3".
The "Highest Number Previously Paid For" (Total or Independent) is the highest number found in the appropriate box in column 1.

Legal Instrument Examiner:
/KAREN VESTAL/

This collection of information is required by 37 CFR 1.16. The information is required to obtain or retain a benefit by the public which is to file (and by the USPTO to process) an application. Confidentiality is governed by 35 U.S.C. 122 and 37 CFR 1.14. This collection is estimated to take 12 minutes to complete, including gathering, preparing, and submitting the completed application form to the USPTO. Time will vary depending upon the individual case. Any comments on the amount of time you require to complete this form and/or suggestions for reducing this burden, should be sent to the Chief Information Officer, U.S. Patent and Trademark Office, U.S. Department of Commerce, P.O. Box 1450, Alexandria, VA 22313-1450. DO NOT SEND FEES OR COMPLETED FORMS TO THIS ADDRESS. **SEND TO: Commissioner for Patents, P.O. Box 1450, Alexandria, VA 22313-1450.**
If you need assistance in completing the form, call 1-800-PTO-9199 and select option 2.

UNITED STATES PATENT AND TRADEMARK OFFICE

UNITED STATES DEPARTMENT OF COMMERCE
United States Patent and Trademark Office
Address: COMMISSIONER FOR PATENTS
P.O. Box 1450
Alexandria, Virginia 22313-1450
www.uspto.gov

APPLICATION NO.	FILING DATE	FIRST NAMED INVENTOR	ATTORNEY DOCKET NO.	CONFIRMATION NO.
12/070,742	02/20/2008	Peter John Cousins	10031.004200	2015

74254 7590 12/24/2009
Okamoto & Benedicto LLP
P.O. Box 641330
San Jose, CA 95164-1330

EXAMINER
PILLAY, DEVINA

ART UNIT	PAPER NUMBER
1795	

MAIL DATE	DELIVERY MODE
12/24/2009	PAPER

Please find below and/or attached an Office communication concerning this application or proceeding.

The time period for reply, if any, is set in the attached communication.

Office Action Summary	Application No.	Applicant(s)	
	12/070,742	COUSINS, PETER JOHN	
	Examiner	Art Unit	
	Devina Pillay	1795	

-- The MAILING DATE of this communication appears on the cover sheet with the correspondence address --

Period for Reply

A SHORTENED STATUTORY PERIOD FOR REPLY IS SET TO EXPIRE 3 MONTH(S) OR THIRTY (30) DAYS, WHICHEVER IS LONGER, FROM THE MAILING DATE OF THIS COMMUNICATION.

- Extensions of time may be available under the provisions of 37 CFR 1.136(a). In no event, however, may a reply be timely filed after SIX (6) MONTHS from the mailing date of this communication.
- If NO period for reply is specified above, the maximum statutory period will apply and will expire SIX (6) MONTHS from the mailing date of this communication.
- Failure to reply within the set or extended period for reply will, by statute, cause the application to become ABANDONED (35 U.S.C. § 133). Any reply received by the Office later than three months after the mailing date of this communication, even if timely filed, may reduce any earned patent term adjustment. See 37 CFR 1.704(b).

Status

1)☐ Responsive to communication(s) filed on _____.

2a)☐ This action is **FINAL**. 2b)☒ This action is non-final.

3)☐ Since this application is in condition for allowance except for formal matters, prosecution as to the merits is closed in accordance with the practice under *Ex parte Quayle*, 1935 C.D. 11, 453 O.G. 213.

Disposition of Claims

4)☒ Claim(s) *1-8 and 17-20* is/are pending in the application.

4a) Of the above claim(s) _____ is/are withdrawn from consideration.

5)☐ Claim(s) _____ is/are allowed.

6)☒ Claim(s) *1-8 and 17-20* is/are rejected.

7)☐ Claim(s) _____ is/are objected to.

8)☐ Claim(s) _____ are subject to restriction and/or election requirement.

Application Papers

9)☐ The specification is objected to by the Examiner.

10)☒ The drawing(s) filed on *20 February 2008* is/are: a)☒ accepted or b)☐ objected to by the Examiner.

Applicant may not request that any objection to the drawing(s) be held in abeyance. See 37 CFR 1.85(a).

Replacement drawing sheet(s) including the correction is required if the drawing(s) is objected to. See 37 CFR 1.121(d).

11)☐ The oath or declaration is objected to by the Examiner. Note the attached Office Action or form PTO-152.

Priority under 35 U.S.C. § 119

12)☐ Acknowledgment is made of a claim for foreign priority under 35 U.S.C. § 119(a)-(d) or (f).

a)☐ All b)☐ Some * c)☐ None of:

1.☐ Certified copies of the priority documents have been received.

2.☐ Certified copies of the priority documents have been received in Application No. _____.

3.☐ Copies of the certified copies of the priority documents have been received in this National Stage application from the International Bureau (PCT Rule 17.2(a)).

* See the attached detailed Office action for a list of the certified copies not received.

Attachment(s)

1) ☒ Notice of References Cited (PTO-892)

2) ☐ Notice of Draftsperson's Patent Drawing Review (PTO-948)

3) ☒ Information Disclosure Statement(s) (PTO/SB/08) Paper No(s)/Mail Date *03/27/2009 05/23/2008*.

4) ☐ Interview Summary (PTO-413) Paper No(s)/Mail Date. _____ .

5) ☐ Notice of Informal Patent Application

6) ☐ Other: _____.

DETAILED ACTION

Election/Restrictions

1. Claims 9-16 are withdrawn from further consideration pursuant to 37 CFR 1.142(b) as being drawn to a nonelected method of making a solar cell, there being no allowable generic or linking claim. Election was made **without** traverse in the reply filed on 12/01/2009.

2. Applicant's election without traverse of claims 1-8 and 17-20 drawn to a solar cell in the reply filed on 12/01/2009 is acknowledged.

Claim Rejections - 35 USC § 103

3. The factual inquiries set forth in *Graham* **v.** *John Deere Co.*, 383 U.S. 1, 148 USPQ 459 (1966), that are applied for establishing a background for determining obviousness under 35 U.S.C. 103(a) are summarized as follows:

1. Determining the scope and contents of the prior art.
2. Ascertaining the differences between the prior art and the claims at issue.
3. Resolving the level of ordinary skill in the pertinent art.
4. Considering objective evidence present in the application indicating obviousness or nonobviousness.

4. Claims 1, 2 and 17-19 are rejected under 35 U.S.C. 103(a) as being unpatentable over Meier et al. (US 6262359 B1) in view of Jordan (US2005/0268963 A1)

<u>Regarding claims 1, 17 and 19</u>, Meier discloses a solar cell (Fig. 6, C7/L65-C8/L36) having a front side (top side) facing the sun to collect solar radiation during normal operation and a backside opposite the front side, the solar cell comprising:

an N-type silicon substrate (318);

an antireflective layer (314) over the surface of the N-type silicon substrate (318); a P-type emitter forming a backside junction (324) with the N-type silicon substrate (320);

a negative polarity metal contact (312) making an electrical connection to the N-type silicon substrate (318) from the front side of the solar cell;

and a positive polarity metal contact (324) making an electrical connection to the P-type emitter (322) from the backside of the solar cell.

However, Meier does not disclose that there is a textured surface on the N-type silicon substrate on the front side of the solar cell and that the P-type emitter layer is polysilicon.

Jordan discloses that the front surface of the solar cell is textured ([0022]). In addition, Jordan discloses that texturizing the front surface increases light absorption ([0022]).

It would have been obvious to one of ordinary skill in the art at the time of the invention to modify the front surface of Meier by texturizing the front surface as disclosed by Jordan because it increases light adsorption.

Jordan addition discloses that a polysilicon or monosilicon wafer can be used to form the emitter layer ([0010]).

It would have been obvious to one of ordinary skill in the art at the time of the invention to modify the monocrystalline silicon emitter of Meier by using a polysilicon emitter region as disclosed by Jordan because it is an effective material for forming an emitter region.

The selection of a known material based on its suitability for its intended use supported a prima facie obviousness determination in *Sinclair & Carroll Co. v. Interchemical Corp.*, 325 U.S. 327, 65 USPQ 297 (1945).

Regarding claims 2 and 18, modified Meier discloses all of the claim limitations as set forth above.

In addition Meier discloses that the antireflective layer comprises silicon nitride (C6/L20-25).

Regarding claim 3, Meier discloses all of the claim limitations as set forth above.

Meier discloses an aluminum contact over the emitter surface. The aluminum contact will have an Al_2O_3 coating due to the formation of a native oxide. Therefore there is a dielectric layer over the P-type emitter.

Regarding claim 8, modified Meier discloses all of the claim limitations as set forth above.

In addition Meier discloses the negative polarity metal contact (312) comprises formed in a contact hole (314 has hole) to the n-type silicon substrate (318) (See Fig. 6).

5. Claims 1-4, 8 and 17-19 are rejected under 35 U.S.C. 103(a) as being unpatentable over Sah et al. (US 4665277) in view of Jordan (US2005/0268963 A1)

Regarding claims 1, 17 and 19, Sah discloses a solar cell (Fig. 4a, C7/L5-60) having a front side (top side) facing the sun to collect solar radiation during normal operation and a backside opposite the front side, the solar cell comprising:

an N-type silicon substrate (20”);

an antireflective layer (14”) over the surface of the N-type silicon substrate (20”); a P-type emitter forming a backside junction with the N-type silicon substrate (22”);

a negative polarity metal contact (30”) making an electrical connection to the N-type silicon substrate (20”) from the front side of the solar cell;

and a positive polarity metal contact (32”) making an electrical connection to the P-type emitter (22”) from the backside of the solar cell.

However, Sah does not disclose that there is a textured surface on the N-type silicon substrate on the front side of the solar cell and that the P-type emitter layer is polysilicon.

Jordan discloses that the front surface of the solar cell is textured ([0022]). In addition, Jordan discloses that texturizing the front surface increases light adsorption ([0022]).

It would have been obvious to one of ordinary skill in the art at the time of the invention to modify the front surface of Sah by texturizing the front surface as disclosed by Jordan because it increases light adsorption.

Jordan discloses that a polysilicon or monosilicon wafer can be used to form the emitter layer ([0010]).

It would have been obvious to one of ordinary skill in the art at the time of the invention to modify the monocrystalline silicon emitter of Sah by using a polysilicon emitter region as disclosed by Jordan because it is an effective material for forming an emitter region.

The selection of a known material based on its suitability for its intended use supported a prima facie obviousness determination in *Sinclair & Carroll Co. v. Interchemical Corp.*, 325 U.S. 327, 65 USPQ 297 (1945).

Regarding claims 2 and 18, modified Sah discloses all of the claim limitations as set forth above.

In addition Sah discloses an antireflective layer (14) (C3/L50-55).

However Sah does not disclose that the anitireflective layer is SiN.

Jordan discloses that the antireflective layer (30) on the front side of the solar cell that is formed of silicon nitride [0044].

It would have been obvious to one of ordinary skill in the art at the time of the invention to modify the antireflective coating of Sah by using a silicon nitride layer as an antireflective coating as disclosed by Jordan because it is a known effective material for providing an antireflective layer.

The selection of a known material based on its suitability for its intended use supported a prima facie obviousness determination in *Sinclair & Carroll Co. v. Interchemical Corp.*, 325 U.S. 327, 65 USPQ 297 (1945).

Regarding claim 3, modified Sah discloses all of the claim limitations as set forth above.

In addition Sah discloses a dielectric layer (28") over the P-type emitter (C7/L10-15).

Regarding claim 4, modified Sah discloses all of the claim limitations as set forth above.

In addition Sah discloses that the dielectric layer (28") comprises SiO_2(C7/L10-15).

Regarding claim 8, modified Sah discloses all of the claim limitations as set forth above.

In addition Sah discloses the negative polarity metal contact (30") comprises formed in a contact hole (12" has a hole) to the n-type silicon substrate (20") (See Fig. 4b).

6. Claim 5 is rejected under 35 U.S.C. 103(a) as being unpatentable over Sah et al. (US 4665277) in view of Jordan (US2005/0268963 A1) as applied to claim 3 above and in view of Sheats (US 206/0157103).

Regarding claim 5, modified Sah discloses all of the claim limitations as set forth above.

However modified Sah does not disclose a trench through the dielectric layer and the p-type polysilicon emitter and into a portion of the n-type silicon substrate on the backside of the solar cell.

Sheats discloses trench cutting through the layers on a solar cell to the substrate ([0059]).

Sheats discloses that this results in edge isolation which prevents short circuits on the outside walls of the device ([0059]).

It would have been obvious to one of ordinary skill in the art at the time of the invention to modify the dielectric layer and p-type silicon emitter layer of modified Sah by forming a trench in the through the dielectric layer and the p-type polysilicon emitter and into a portion of the n-type silicon substrate on the backside of the solar cell as

disclosed by Sheats because it results in edge isolation which prevents short circuits on the outside walls of the device.

7. Claims 6, 7 and 20 are rejected under 35 U.S.C. 103(a) as being unpatentable over Sah et al. (US 4665277) in view of Jordan (US2005/0268963 A1) as applied to claim 1 above in further view of Hall (US 4427839).

Regarding claim 6, modified Sah discloses all of the claim limitations as set forth above.

Sah discloses a metal contact (31) that is placed on a dielectric layer (23) (Fig. 4b).

However Sah does not disclose that the positive polarity metal contact comprises a metal forming an infrared reflecting layer with a dielectric layer.

Hall discloses a contact on solar cell which comprises a metal contact and dielectric layer (C4/L18-45).

Hall additionally discloses that the metal electrode acts as a reflective layer which increases the adsorption of incident light (C4/L18-L45).

It would have been obvious to one of ordinary skill in the art at the time of the invention to modify the positive polarity metal contact of Sah by using a metal forming an infrared reflecting layer with a dielectric layer as disclosed by Hall because it results in higher light adsorption and is an effective material to form an electrode.

Regarding claims 7 and 20, modified Sah discloses all of the claim limitations as set forth above.

Sah discloses a metal contact (31) that is placed on a dielectric layer (23) (Fig. 4b).

However Sah does not disclose that the positive polarity metal contact comprises silver forming an infrared reflecting layer with a dielectric layer.

Hall discloses a contact on solar cell which comprises a silver contact (36)and dielectric layer (40) (See Fig. 2b) (C4/L18-45).

Hall additionally discloses that the metal electrode acts as a reflective layer which increases the adsorption of incident light (C4/L18-L45).

It would have been obvious to one of ordinary skill in the art at the time of the invention to modify the positive polarity metal contact of Sah by using silver with a dielectric layer as disclosed by Hall because it results in higher light adsorption and is an effective material to form an electrode.

As disclosed by McKee et al. (US5479018) silver is a highly reflective material in the infrared wavelength (C6/L40-45).

Conclusion

8. Any inquiry concerning this communication or earlier communications from the examiner should be directed to Devina Pillay whose telephone number is (571)270-1180. The examiner can normally be reached on Monday thru Friday 7:30am -5:00pm (EST).

If attempts to reach the examiner by telephone are unsuccessful, the examiner's supervisor, Basia Ridley can be reached on 571-272-1453. The fax phone number for the organization where this application or proceeding is assigned is 571-273-8300.

Information regarding the status of an application may be obtained from the Patent Application Information Retrieval (PAIR) system. Status information for published applications may be obtained from either Private PAIR or Public PAIR. Status information for unpublished applications is available through Private PAIR only. For more information about the PAIR system, see http://pair-direct.uspto.gov. Should you have questions on access to the Private PAIR system, contact the Electronic Business Center (EBC) at 866-217-9197 (toll-free). If you would like assistance from a USPTO Customer Service Representative or access to the automated information system, call 800-786-9199 (IN USA OR CANADA) or 571-272-1000.

/D. P./
Examiner, Art Unit 1795

/Jeffrey T. Barton/
Primary Examiner, Art Unit 1795
18 December 2009

Notice of References Cited	Application/Control No. 12/070,742	Applicant(s)/Patent Under Reexamination COUSINS, PETER JOHN	
	Examiner Devina Pillay	Art Unit 1795	Page 1 of 1

U.S. PATENT DOCUMENTS

*		Document Number Country Code-Number-Kind Code	Date MM-YYYY	Name	Classification
*	A	US-5,479,018	12-1995	McKee et al.	250/338.1
*	B	US-2006/0157103 A1	07-2006	Sheats et al.	136/244
*	C	US-5,449,626	09-1995	Hezel, Rudolf	438/71
*	D	US-2005/0268963 A1	12-2005	Jordan et al.	136/256
*	E	US-4,427,839	01-1984	Hall, Robert N.	136/255
*	F	US-6,262,359 B1	07-2001	Meier et al.	136/256
*	G	US-4,665,277	05-1987	Sah et al.	136/255
	H	US-			
	I	US-			
	J	US-			
	K	US-			
	L	US-			
	M	US-			

FOREIGN PATENT DOCUMENTS

*		Document Number Country Code-Number-Kind Code	Date MM-YYYY	Country	Name	Classification
	N					
	O					
	P					
	Q					
	R					
	S					
	T					

NON-PATENT DOCUMENTS

*		Include as applicable: Author, Title Date, Publisher, Edition or Volume, Pertinent Pages)
	U	
	V	
	W	
	X	

*A copy of this reference is not being furnished with this Office action. (See MPEP § 707.05(a).)
Dates in MM-YYYY format are publication dates. Classifications may be US or foreign.

Search Notes	Application/Control No.	Applicant(s)/Patent Under Reexamination
	12070742	COUSINS, PETER JOHN
	Examiner	**Art Unit**
	Devina Pillay	1795

SEARCHED

Class	Subclass	Date	Examiner
136	255	12/8/2009	DP

SEARCH NOTES

Search Notes	Date	Examiner
Inventor name search in PALM	12/8/2009	DP
EAST Text Search (See Search History)	12/8/2009	DP

INTERFERENCE SEARCH

Class	Subclass	Date	Examiner

EAST Search History (Prior Art)

Ref #	Hits	Search Query	DBs	Default Operator	Plurals	Time Stamp
L2	15	"5258077"	US-PGPUB; USPAT; USOCR; FPRS; EPO; JPO; DERWENT; IBM_TDB	OR	ON	2009/12/07 17:11
L3	14	("3895975" | "4056879" | "4106047" | "4131486" | "4226017" | "4916503" | "5538564" | "5641362" | "5951742" | "5973260" | "6071753").PN. OR ("6262359").URPN.	US-PGPUB; USPAT; USOCR	OR	ON	2009/12/07 17:13
L4	7	(back near junction) and (passiv$4 with "SiO.sub.2")	US-PGPUB; USPAT; USOCR; FPRS; EPO; JPO; DERWENT; IBM_TDB	OR	ON	2009/12/07 18:25
L5	10	(back with surface with field) and (passiv$4 with "SiO.sub.2")	US-PGPUB; USPAT; USOCR; FPRS; EPO; JPO; DERWENT; IBM_TDB	OR	ON	2009/12/07 18:27
L6	15	(passiv$4 with "SiO.sub.2" with emitter)	US-PGPUB; USPAT; USOCR; FPRS; EPO; JPO; DERWENT; IBM_TDB	OR	ON	2009/12/07 18:28
L7	1984	(passiv$4 with ("SiO.sub.2" or (silicon near dioxide)))	US-PGPUB; USPAT; USOCR; FPRS; EPO; JPO; DERWENT; IBM_TDB	OR	ON	2009/12/07 18:31
L8	67	(passiv$4 with ("SiO.sub.2" or (silicon near dioxide))) and solar near cell	US-PGPUB; USPAT; USOCR; FPRS; EPO; JPO; DERWENT; IBM_TDB	OR	ON	2009/12/07 18:31

EAST Search History (Prior Art)

L9	3	"20070082206"	US-PGPUB; USPAT; USOCR; FPRS; EPO; JPO; DERWENT; IBM_TDB	OR	ON	2009/12/07 18:37
L11	14	("3895975" | "4056879" | "4106047" | "4131486" | "4226017" | "4916503" | "5538564" | "5641362" | "5951742" | "5973260" | "6071753").PN. OR ("6262359").URPN.	US-PGPUB; USPAT; USOCR	OR	ON	2009/12/07 19:00
L12	163	(back near junction) and (solar near cell)	US-PGPUB; USPAT; USOCR; FPRS; EPO; JPO; DERWENT; IBM_TDB	OR	ON	2009/12/07 19:13
L13	141	(back near junction) and (photovoltaic)	US-PGPUB; USPAT; USOCR; FPRS; EPO; JPO; DERWENT; IBM_TDB	OR	ON	2009/12/07 19:29
L14	39	13 not 12	US-PGPUB; USPAT; USOCR; FPRS; EPO; JPO; DERWENT; IBM_TDB	OR	ON	2009/12/07 19:29
L15	345	(back near2 junction) and (solar near cell or (photovoltaic))	US-PGPUB; USPAT; USOCR; FPRS; EPO; JPO; DERWENT; IBM_TDB	OR	ON	2009/12/07 19:31
L16	182	15 not 12	US-PGPUB; USPAT; USOCR; FPRS; EPO; JPO; DERWENT; IBM_TDB	OR	ON	2009/12/07 19:31

EAST Search History (Prior Art)

L17	32	16 and emitter	US-PGPUB; USPAT; USOCR; FPRS; EPO; JPO; DERWENT; IBM_TDB	OR	ON	2009/12/07 19:31
L18	16	(US-20050268963-$ or US-20020153039-$ or US-20060196535-$ or US-20090101199-$ or US-20040097062-$ or US-20040112426-$ or US-20070186970-$).did. or (US-4379944-$ or US-4665277-$ or US-5320684-$ or US-6210991-$ or US-5792280-$ or US-5899704-$ or US-6262359-$ or US-5258077-$).did. or (US-20090205712-$).did.	US-PGPUB; USPAT; DERWENT	OR	ON	2009/12/07 19:33
L19	0	18 and (isolation near2 trench)	US-PGPUB; USPAT; USOCR; FPRS; EPO; JPO; DERWENT; IBM_TDB	OR	ON	2009/12/07 19:34
L20	346	dielectric and (antireflection or anti near reflection or ARC) and emitter and textur$5	US-PGPUB; USPAT; USOCR	OR	ON	2009/12/07 19:34
L21	16	20 and (isolation near trench)	US-PGPUB; USPAT; USOCR	OR	ON	2009/12/07 19:34
L22	251	solar near cell and (isolation near trench)	US-PGPUB; USPAT; USOCR	OR	ON	2009/12/07 19:35
L23	232	(back with surface with field) and (isolation near trench)	US-PGPUB; USPAT; USOCR; FPRS; EPO; JPO; DERWENT; IBM_TDB	OR	ON	2009/12/07 19:36
L24	2	23 and solar near cell	US-PGPUB; USPAT; USOCR; FPRS; EPO; JPO; DERWENT; IBM_TDB	OR	ON	2009/12/07 19:36
L25	24	(back with surface with field) and (isolation near2 edge) and (solar near cell)	US-PGPUB; USPAT; USOCR; FPRS; EPO; JPO; DERWENT; IBM_TDB	OR	ON	2009/12/07 19:40

EAST Search History (Prior Art)

L26	49	("20030134469"|"20040200520"|"20040200520"|"20060130891"|"20070082206"|"3961997"|"3961997"|"4927770"|"4927770"|"5030295"|"5053083"|"5057439"|"5164019"|"5217539"|"5360990"|"5369291"|"5641362"|"5030295"|"5053083"|"5057439"|"5164019"|"5217539"|"5266125"|"5360990"|"5369291"|"5641362"|"6274402"|"6313395"|"6333457"|"6387726"|"6423568"|"6998288"|"6998288"|"6274402"|"6313395"|"6333457"|"6337283"|"6387726"|"6423568"|"6524880"|"6998288"|"7135350"|"7135350").PN.	US-PGPUB; USPAT; USOCR; FPRS; EPO; JPO; DERWENT; IBM_TDB	OR	ON	2009/12/07 19:54
L27	288	oxide with passiv$5 with emitter	US-PGPUB; USPAT; USOCR; FPRS; EPO; JPO; DERWENT; IBM_TDB	OR	ON	2009/12/07 20:00
L28	32	27 and ((solar near cell) photovoltaic)	US-PGPUB; USPAT; USOCR; FPRS; EPO; JPO; DERWENT; IBM_TDB	OR	ON	2009/12/07 20:00
L29	29	"4726850"	US-PGPUB; USPAT; USOCR; FPRS; EPO; JPO; DERWENT; IBM_TDB	OR	ON	2009/12/07 20:29
L30	0	(back with surface with field) and (isolat$3 near5 edge with trench) and (solar near cell)	US-PGPUB; USPAT; USOCR; FPRS; EPO; JPO; DERWENT; IBM_TDB	OR	ON	2009/12/07 20:34
L31	32	(back with surface with field) and (isolat$3 near5 edge) and (solar near cell)	US-PGPUB; USPAT; USOCR; FPRS; EPO; JPO; DERWENT; IBM_TDB	OR	ON	2009/12/07 20:34
L32	39	(back with surface with field) and (isolation near5 trench with etch)	US-PGPUB; USPAT; USOCR; FPRS; EPO; JPO; DERWENT; IBM_TDB	OR	ON	2009/12/07 20:40

EAST Search History (Prior Art)

L33	20	(solar near cell) and (isolation near5 trench with etch)	US-PGPUB; USPAT; USOCR; FPRS; EPO; JPO; DERWENT; IBM_TDB	OR	ON	2009/12/07 20:41
L34	304	(solar near cell) and (isolation near5 trench)	US-PGPUB; USPAT; USOCR; FPRS; EPO; JPO; DERWENT; IBM_TDB	OR	ON	2009/12/07 20:42
L35	7	(solar near cell) and (isolation near5 trench with edge)	US-PGPUB; USPAT; USOCR; FPRS; EPO; JPO; DERWENT; IBM_TDB	OR	ON	2009/12/07 20:42
L36	24	(trench with (electric$4 near isolat$4)) and emitter and (solar near cell)	US-PGPUB; USPAT; USOCR; FPRS; EPO; JPO; DERWENT; IBM_TDB	OR	ON	2009/12/07 20:52
L37	41	(silver near5 ("SiO.sub.2" or silicon near dioxide)) and (solar near cell) and emitter	US-PGPUB; USPAT; USOCR; FPRS; EPO; JPO; DERWENT; IBM_TDB	OR	ON	2009/12/07 21:06
L38	42	(silver near5 ("SiO.sub.2" or silicon near dioxide or passiv$4)) and (solar near cell) and emitter	US-PGPUB; USPAT; USOCR; FPRS; EPO; JPO; DERWENT; IBM_TDB	OR	ON	2009/12/07 21:07
L39	50	((silver or Ag) near5 ("SiO.sub.2" or silicon near dioxide or passiv$4)) and (solar near cell) and emitter	US-PGPUB; USPAT; USOCR; FPRS; EPO; JPO; DERWENT; IBM_TDB	OR	ON	2009/12/07 21:07

Petitioner Canadian Solar Inc. - Ex. 1002, p. 91

EAST Search History (Prior Art)

L40	44	((silver) near5 ("SiO.sub.2" or silicon near dioxide or passiv$4)) and ((solar near cell) or photovoltaic) and emitter	US-PGPUB; USPAT; USOCR; FPRS; EPO; JPO; DERWENT; IBM_TDB	OR	ON	2009/12/07 21:08
L41	90	((silver) near5 ("SiO.sub.2" or silicon near dioxide or passiv$4)) and ((solar near cell) or photovoltaic)	US-PGPUB; USPAT; USOCR; FPRS; EPO; JPO; DERWENT; IBM_TDB	OR	ON	2009/12/07 21:09
L42	46	41 not 40	US-PGPUB; USPAT; USOCR; FPRS; EPO; JPO; DERWENT; IBM_TDB	OR	ON	2009/12/07 21:09
L43	105	((silver) near5 ("SiO.sub.2" or silicon near dioxide or passiv$4)) and ((solar near cell) or photovoltaic or optoelectronic)	US-PGPUB; USPAT; USOCR; FPRS; EPO; JPO; DERWENT; IBM_TDB	OR	ON	2009/12/07 21:12
L44	15	43 not 41	US-PGPUB; USPAT; USOCR; FPRS; EPO; JPO; DERWENT; IBM_TDB	OR	ON	2009/12/07 21:12
L45	345	((silver) with ("SiO.sub.2" or silicon near dioxide or passiv$4)) and ((solar near cell) or photovoltaic or optoelectronic)	US-PGPUB; USPAT; USOCR; FPRS; EPO; JPO; DERWENT; IBM_TDB	OR	ON	2009/12/07 21:13
L46	240	45 not 43	US-PGPUB; USPAT; USOCR; FPRS; EPO; JPO; DERWENT; IBM_TDB	OR	ON	2009/12/07 21:13
L47	14	("3150999" | "4227942" | "4348254").PN. OR ("4427839").URPN.	US-PGPUB; USPAT; USOCR	OR	ON	2009/12/07 21:17

EAST Search History (Prior Art)

L48	1122	silver with infrared with reflect$4	US-PGPUB; USPAT; USOCR	OR	ON	2009/12/07 21:38
L49	584	silver near5 infrared with reflect$4	US-PGPUB; USPAT; USOCR	OR	ON	2009/12/07 21:38
L50	565	silver near5 infrared near5 reflect$4	US-PGPUB; USPAT; USOCR	OR	ON	2009/12/07 21:38
L51	25	50 and solar near cell	US-PGPUB; USPAT; USOCR	OR	ON	2009/12/07 21:38
L52	29	50 and photovoltaic	US-PGPUB; USPAT; USOCR	OR	ON	2009/12/07 21:41
L53	18	"5479018"	US-PGPUB; USPAT; USOCR	OR	ON	2009/12/07 21:56
S1	2	"20030134469"	US-PGPUB; USPAT; USOCR; FPRS; EPO; JPO; DERWENT; IBM_TDB	OR	ON	2009/12/07 11:43
S2	4	("2003/0134469").URPN.	USPAT	OR	ON	2009/12/07 11:56
S3	0	"10353261"	USPAT	OR	ON	2009/12/07 11:57
S4	1	"10/353261"	USPAT	OR	ON	2009/12/07 11:57
S5	19	("2999240" | "4001864" | "4104091" | "4133698" | "4142200" | "4152824" | "4156822" | "4201798" | "4377901" | "4478879" | "5013396" | "5543333" | "6096968" | "6136673" | "6146483" | "6206996" | "6278053").PN. OR ("6825104").URPN.	US-PGPUB; USPAT; USOCR	OR	ON	2009/12/07 11:58
S6	39	(back near surface near field) and texture and dielectric	US-PGPUB; USPAT; USOCR	OR	ON	2009/12/07 11:58
S7	18	(back near surface near field) and texture and dielectric and anti near reflective	US-PGPUB; USPAT; USOCR	OR	ON	2009/12/07 12:06
S8	18	(back near surface near field) and texture and dielectric and anti near reflective	US-PGPUB; USPAT; USOCR; FPRS; EPO; JPO; DERWENT; IBM_TDB	OR	ON	2009/12/07 12:06

EAST Search History (Prior Art)

S9	10	(back near surface near field) and texture and antireflective and emitter	US-PGPUB; USPAT; USOCR	OR	ON	2009/12/07 12:09
S10	65	texture and antireflective and emitter	US-PGPUB; USPAT; USOCR	OR	ON	2009/12/07 12:09
S11	66	texture and antireflective and emitter	US-PGPUB; USPAT; USOCR; FPRS; EPO; JPO; DERWENT; IBM_TDB	OR	ON	2009/12/07 12:10
S12	120	textur$4 and antireflective and emitter	US-PGPUB; USPAT; USOCR; FPRS; EPO; JPO; DERWENT; IBM_TDB	OR	ON	2009/12/07 12:11
S13	54	S12 not S11	US-PGPUB; USPAT; USOCR; FPRS; EPO; JPO; DERWENT; IBM_TDB	OR	ON	2009/12/07 12:11
S14	18	S13 and dielectric	US-PGPUB; USPAT; USOCR; FPRS; EPO; JPO; DERWENT; IBM_TDB	OR	ON	2009/12/07 12:12
S15	3	"20070082206"	US-PGPUB; USPAT; USOCR; FPRS; EPO; JPO; DERWENT; IBM_TDB	OR	ON	2009/12/07 12:17
S16	443	dielectric and antireflective and emitter	US-PGPUB; USPAT; USOCR; FPRS; EPO; JPO; DERWENT; IBM_TDB	OR	ON	2009/12/07 12:17

Petitioner Canadian Solar Inc. - Ex. 1002, p. 94

EAST Search History (Prior Art)

S17	132	dielectric and antireflective and emitter and ((solar near cell) (photovoltaic))	US-PGPUB; USPAT; USOCR; FPRS; EPO; JPO; DERWENT; IBM_TDB	OR	ON	2009/12/07 12:18
S18	192	(back near surface near field) and dielectric	US-PGPUB; USPAT; USOCR	OR	ON	2009/12/07 12:18
S19	1	"20030134469"	US-PGPUB; USPAT; USOCR	OR	ON	2009/12/07 12:28
S20	19	("3413157" | "4012235" | "4239810" | "4313768" | "4604791" | "4624045" | "4633031" | "4781766" | "4836861" | "4910153" | "5879977" | "6111191").PN. OR ("6210991").URPN.	US-PGPUB; USPAT; USOCR	OR	ON	2009/12/07 12:51
S21	2	"20060196535"	US-PGPUB; USPAT; USOCR	OR	ON	2009/12/07 12:55
S22	14	("20030070707" | "4070097" | "4084099" | "4278831" | "4496788" | "5057439" | "5066340" | "5213628" | "5468652" | "5728230" | "6013582" | "6118258" | "6210991" | "6465724").PN. OR ("7554031").URPN.	US-PGPUB; USPAT; USOCR	OR	ON	2009/12/07 13:13
S23	346	dielectric and (antireflection or anti near reflection or ARC) and emitter and textur$5	US-PGPUB; USPAT; USOCR	OR	ON	2009/12/07 13:17
S24	347	dielectric and (antireflection or anti near reflection or ARC) and emitter and textur$5	US-PGPUB; USPAT; USOCR; FPRS; EPO; JPO; DERWENT; IBM_TDB	OR	ON	2009/12/07 13:17
S25	124	S23 and ((solar near cell) (photovoltaic))	US-PGPUB; USPAT; USOCR; FPRS; EPO; JPO; DERWENT; IBM_TDB	OR	ON	2009/12/07 13:17
S26	7	11/263159	US-PGPUB; USPAT; USOCR; FPRS; EPO; JPO; DERWENT; IBM_TDB	OR	ON	2009/12/07 13:50

EAST Search History (Prior Art)

S27	29	S24 and optoelectronic	US-PGPUB; USPAT; USOCR; FPRS; EPO; JPO; DERWENT; IBM_TDB	OR	ON	2009/12/07 14:08
S28	479	dielectric and (antireflection or anti near reflection or ARC) and (emitter or collector) and textur$5	US-PGPUB; USPAT; USOCR	OR	ON	2009/12/07 14:09
S29	133	S28 not S24	US-PGPUB; USPAT; USOCR	OR	ON	2009/12/07 14:09
S30	32	S29 and ((solar near cell) (photovoltaic))	US-PGPUB; USPAT; USOCR; FPRS; EPO; JPO; DERWENT; IBM_TDB	OR	ON	2009/12/07 14:09
S31	19	("4090213" | "4131486" | "4133698" | "4232245" | "4255211" | "4315097" | "4316049" | "4341918" | "4365262" | "4367368" | "4385198" | "4427839").PN. OR ("4665277").URPN.	US-PGPUB; USPAT; USOCR	OR	ON	2009/12/07 14:32
S32	14	("3150999" | "4227942" | "4348254").PN. OR ("4427839").URPN.	US-PGPUB; USPAT; USOCR	OR	ON	2009/12/07 14:35
S33	1092	(antireflection or anti near reflection or ARC) and emitter and textur$5	US-PGPUB; USPAT; USOCR; FPRS; EPO; JPO; DERWENT; IBM_TDB	OR	ON	2009/12/07 14:47
S34	233	S33 and (solar near cell)	US-PGPUB; USPAT; USOCR; FPRS; EPO; JPO; DERWENT; IBM_TDB	OR	ON	2009/12/07 14:47
S35	215	S34 not (S17)	US-PGPUB; USPAT; USOCR; FPRS; EPO; JPO; DERWENT; IBM_TDB	OR	ON	2009/12/07 14:47

EAST Search History (Prior Art)

S36	215	S35 not S29	US-PGPUB; USPAT; USOCR; FPRS; EPO; JPO; DERWENT; IBM_TDB	OR	ON	2009/12/07 14:48
S37	0	2004/0112426	US-PGPUB; USPAT; USOCR; FPRS; EPO; JPO; DERWENT; IBM_TDB	OR	ON	2009/12/07 15:08
S38	2	"20040112426"	US-PGPUB; USPAT; USOCR; FPRS; EPO; JPO; DERWENT; IBM_TDB	OR	ON	2009/12/07 15:08
S39	10	("20040200520" | "4234352" | "4478879" | "4920639" | "4927770" | "5053083" | "5320684" | "5538564" | "5641362" | "6624737").PN. OR ("7339110").URPN.	US-PGPUB; USPAT; USOCR	OR	ON	2009/12/07 15:14
S40	88	(back near surface near field) and antireflective and emitter	US-PGPUB; USPAT; USOCR; FPRS; EPO; JPO; DERWENT; IBM_TDB	OR	ON	2009/12/07 15:23
S41	175	(back near surface near field) and (antireflective ARC (anti near reflective)) and emitter	US-PGPUB; USPAT; USOCR; FPRS; EPO; JPO; DERWENT; IBM_TDB	OR	ON	2009/12/07 15:24
S42	87	S41 not S40	US-PGPUB; USPAT; USOCR; FPRS; EPO; JPO; DERWENT; IBM_TDB	OR	ON	2009/12/07 15:24
S43	138	S41 not S36	US-PGPUB; USPAT; USOCR; FPRS; EPO; JPO; DERWENT; IBM_TDB	OR	ON	2009/12/07 15:24

EAST Search History (Prior Art)

S44	26	("2841860" | "2854363" | "3134906" | "4070689" | "4341589" | "4428783" | "4523966" | "4665277" | "4703553" | "5156978").PN. OR ("5928438").URPN.	US-PGPUB; USPAT; USOCR	OR	ON	2009/12/07 15:30
S45	19	("4090213" | "4131486" | "4133698" | "4232245" | "4255211" | "4315097" | "4316049" | "4341918" | "4365262" | "4367368" | "4385198" | "4427839").PN. OR ("4665277").URPN.	US-PGPUB; USPAT; USOCR	OR	ON	2009/12/07 16:00
S46	11	("3081370" | "3757123" | "3948682" | "3969746").PN. OR ("4131486").URPN.	US-PGPUB; USPAT; USOCR	OR	ON	2009/12/07 16:02

UNITED STATES PATENT AND TRADEMARK OFFICE

UNITED STATES DEPARTMENT OF COMMERCE
United States Patent and Trademark Office
Address: COMMISSIONER FOR PATENTS
P.O. Box 1450
Alexandria, Virginia 22313-1450
www.uspto.gov

BIB DATA SHEET

CONFIRMATION NO. 2015

SERIAL NUMBER	FILING or 371(c) DATE	CLASS	GROUP ART UNIT	ATTORNEY DOCKET NO.
12/070,742	02/20/2008 RULE	136	1795	10031.004200

APPLICANTS
Peter John Cousins, Menlo Park, CA;

**** CONTINUING DATA ****************************

**** FOREIGN APPLICATIONS ****************************

**** IF REQUIRED, FOREIGN FILING LICENSE GRANTED ****
03/13/2008

Foreign Priority claimed	35 USC 119(a-d) conditions met	Verified and Acknowledged	Met after Allowance	STATE OR COUNTRY	SHEETS DRAWINGS	TOTAL CLAIMS	INDEPENDENT CLAIMS
☐ Yes ☑ No	☐ Yes ☑ No	/DEVINA PILLAY/ Examiner's Signature	☐ Initials	CA	7	20	3

ADDRESS

Okamoto & Benedicto LLP
P.O. Box 641330
San Jose, CA 95164-1330
UNITED STATES

TITLE

Front contact solar cell with formed emitter

FILING FEE RECEIVED		
1030	FEES: Authority has been given in Paper No._____ to charge/credit DEPOSIT ACCOUNT No._____ for following:	☐ All Fees ☐ 1.16 Fees (Filing) ☐ 1.17 Fees (Processing Ext. of time) ☐ 1.18 Fees (Issue) ☐ Other _____ ☐ Credit

PTO/SB/08a (03-09)
Approved for use through 03/31/2009. OMB 0651-0031
U.S. Patent and Trademark Office; U.S. DEPARTMENT OF COMMERCE

Under the Paperwork Reduction Act of 1995, no persons are required to respond to a collection of information unless it contains a valid OMB control number.

INFORMATION DISCLOSURE STATEMENT BY APPLICANT

(Not for submission under 37 CFR 1.99)

Application Number	12070742
Filing Date	2008-02-20
First Named Inventor	Peter John Cousins
Art Unit	1795
Examiner Name	not yet known
Attorney Docket Number	10031.004200

U.S.PATENTS Remove

Examiner Initial*	Cite No	Patent Number	Kind Code[1]	Issue Date	Name of Patentee or Applicant of cited Document	Pages,Columns,Lines where Relevant Passages or Relevant Figures Appear
/D.P./	1	5266125		1993-11-30	Rand, et al.	
/D.P./	2	6524880		2003-02-25	Moon, et al.	

If you wish to add additional U.S. Patent citation information please click the Add button. Add

U.S.PATENT APPLICATION PUBLICATIONS Remove

Examiner Initial*	Cite No	Publication Number	Kind Code[1]	Publication Date	Name of Patentee or Applicant of cited Document	Pages,Columns,Lines where Relevant Passages or Relevant Figures Appear
/D.P./	1	20030134469		2003-07-17	Horzel, et al.	
/D.P./	2	20060130891		2006-06-22	Carlson	
/D.P./	3	20070082206		2007-04-12	Hartig	

If you wish to add additional U.S. Published Application citation information please click the Add button. Add

FOREIGN PATENT DOCUMENTS Remove

Examiner Initial*	Cite No	Foreign Document Number[3]	Country Code[2] ¡	Kind Code[4]	Publication Date	Name of Patentee or Applicant of cited Document	Pages,Columns,Lines where Relevant Passages or Relevant Figures Appear	T[5]

Receipt date: 03/27/2009	Application Number	12070742	12070742 - GAU: 1795
INFORMATION DISCLOSURE STATEMENT BY APPLICANT (**Not for submission under 37 CFR 1.99)**	Filing Date	2008-02-20	
	First Named Inventor	Peter John Cousins	
	Art Unit	1795	
	Examiner Name	not yet known	
	Attorney Docket Number	10031.004200	

	1							☐

If you wish to add additional Foreign Patent Document citation information please click the Add button Add

NON-PATENT LITERATURE DOCUMENTS Remove

Examiner Initials*	Cite No	Include name of the author (in CAPITAL LETTERS), title of the article (when appropriate), title of the item (book, magazine, journal, serial, symposium, catalog, etc), date, pages(s), volume-issue number(s), publisher, city and/or country where published.	T[5]
/D.P./	1	PCT International Search Report for Application No. PCT/US09/32345, 23 March 2009, 2 sheets.	☐

If you wish to add additional non-patent literature document citation information please click the Add button Add

EXAMINER SIGNATURE

Examiner Signature	/Devina Pillay/	Date Considered	12/07/2009

*EXAMINER: Initial if reference considered, whether or not citation is in conformance with MPEP 609. Draw line through a citation if not in conformance and not considered. Include copy of this form with next communication to applicant.

[1] See Kind Codes of USPTO Patent Documents at www.USPTO.GOV or MPEP 901.04. [2] Enter office that issued the document, by the two-letter code (WIPO Standard ST.3). [3] For Japanese patent documents, the indication of the year of the reign of the Emperor must precede the serial number of the patent document. [4] Kind of document by the appropriate symbols as indicated on the document under WIPO Standard ST.16 if possible. [5] Applicant is to place a check mark here if English language translation is attached.

PTO/SB/08a (03-08)
Approved for use through 04/30/2008. OMB 0651-0031
U.S. Patent and Trademark Office; U.S. DEPARTMENT OF COMMERCE

Under the Paperwork Reduction Act of 1995, no persons are required to respond to a collection of information unless it contains a valid OMB control number.

INFORMATION DISCLOSURE STATEMENT BY APPLICANT

(Not for submission under 37 CFR 1.99)

Application Number	12070742
Filing Date	2008-02-20
First Named Inventor	Peter John Cousins
Art Unit	1795
Examiner Name	unknown
Attorney Docket Number	10031.004200

U.S.PATENTS Remove

Examiner Initial*	Cite No	Patent Number	Kind Code[1]	Issue Date	Name of Patentee or Applicant of cited Document	Pages,Columns,Lines where Relevant Passages or Relevant Figures Appear
/D.P./	1	7135350	B1	2006-11-14	Smith, et al.	
/D.P./	2	6998288	B1	2006-02-14	Smith, et al.	
/D.P./	3	4927770	A1	1990-05-22	Swanson	
/D.P./	4	5053083	A1	1991-10-01	Sinton	
/D.P./	5	5164019	A1	1992-11-17	Sinton	
/D.P./	6	5217539	A1	1993-06-08	Fraas, et al.	
/D.P./	7	5360990	A1	1994-11-01	Swanson	
/D.P./	8	5369291	A1	1994-11-29	Swanson	

Receipt date: 05/23/2008	Application Number	12070742	12070742 - GAU: 1795
INFORMATION DISCLOSURE STATEMENT BY APPLICANT (**Not for submission under 37 CFR 1.99)**	Filing Date	2008-02-20	
	First Named Inventor	Peter John Cousins	
	Art Unit	1795	
	Examiner Name	unknown	
	Attorney Docket Number	10031.004200	

/D.P./	9	6274402	B1	2001-08-14	Verlinden, et al.	
/D.P./	10	6313395	B1	2001-11-06	Crane, et al.	
/D.P./	11	6333457	B1	2001-12-25	Mulligan, et al.	
/D.P./	12	6337283	B1	2002-01-08	Verlinden, et al.	
/D.P./	13	6387726	B1	2002-05-14	Verlinden, et al.	
/D.P./	14	6423568	B1	2002-07-23	Verlinden, et al.	
/D.P./	15	3961997		1976-06-08	Chu	
/D.P./	16	5030295		1991-07-09	Swanson, et al.	
/D.P./	17	5057439		1991-10-15	Swanson, et al.	
/D.P./	18	6998288	B1	2006-02-14	Smith, et al.	
/D.P./	19	5641362		1997-06-24	Meier	

Receipt date: 05/23/2008	Application Number	12070742	12070742 - GAU: 1795
INFORMATION DISCLOSURE STATEMENT BY APPLICANT (**Not for submission under 37 CFR 1.99)**	Filing Date	2008-02-20	
	First Named Inventor	Peter John Cousins	
	Art Unit	1795	
	Examiner Name	unknown	
	Attorney Docket Number	10031.004200	

If you wish to add additional U.S. Patent citation information please click the Add button. Add

U.S.PATENT APPLICATION PUBLICATIONS Remove

Examiner Initial*	Cite No	Publication Number	Kind Code[1]	Publication Date	Name of Patentee or Applicant of cited Document	Pages,Columns,Lines where Relevant Passages or Relevant Figures Appear
/D.P./	1	20040200520	A1	2004-10-14	Mulligan, et al.	

If you wish to add additional U.S. Published Application citation information please click the Add button. Add

FOREIGN PATENT DOCUMENTS Remove

Examiner Initial*	Cite No	Foreign Document Number[3]	Country Code[2] ¡	Kind Code[4]	Publication Date	Name of Patentee or Applicant of cited Document	Pages,Columns,Lines where Relevant Passages or Relevant Figures Appear	T[5]
	1							☐

If you wish to add additional Foreign Patent Document citation information please click the Add button Add

NON-PATENT LITERATURE DOCUMENTS Remove

Examiner Initials*	Cite No	Include name of the author (in CAPITAL LETTERS), title of the article (when appropriate), title of the item (book, magazine, journal, serial, symposium, catalog, etc), date, pages(s), volume-issue number(s), publisher, city and/or country where published.	T[5]
/D.P./	1	W.P. MULLIGAN, et al., " A Flat-Plate Concentrator: Micro-Concentrator Design Overview", 2000, 3 sheets, Proceedings of the 28th IEEE PVSC.	☐
/D.P./	2	K. R. McINTOSH, et al., " The Choice of Silicon Wafer for the Production of Low-Cost Rear-Contact Solar Cells", May 2003, 4 sheets, Sunpower Corporation, Sunnyvale, CA.	☐
/D.P./	3	P.J. VERLINDEN, et al., " Will We have a 20%-Efficient(PTC) Photovoltaic System?", 2001, 6 sheets, Proceedings of the 17th Europe Photovoltaic Solar Energy Conference.	☐
/D.P./	4	WILLIAM P. MULLIGAN, et al., " Development of Chip-Size Silicon Solar Cells", 2000, 6 sheets, Proceedings of the 28th IEEE PVSC.	☐

Receipt date: 05/23/2008	Application Number	12070742	12070742 - GAU: 1795
INFORMATION DISCLOSURE STATEMENT BY APPLICANT (**Not for submission under 37 CFR 1.99)**	Filing Date	2008-02-20	
	First Named Inventor	Peter John Cousins	
	Art Unit	1795	
	Examiner Name	unknown	
	Attorney Docket Number	10031.004200	

/D.P./	5	AKIRA TERAO, et al., "A Mirror-Less Design for Micro-Concentrator Modules", 2000, 4 sheets, Proceedings of the 28th IEEE PVSC.	☐
/D.P./	6	P.J. VERLINDEN, et al., "Backside-Contact Silicon Solar Cells with Improved Efficiency for the '96 World Solar Challenge", 1997, 5 sheets, Proceedings of the 15th EPSEC.	☐
/D.P./	7	P.J. VERLINDEN, et al., "One-Year Comparison of a Concentrator Module with Silicon Point-Contact Solar Cell to a Fixed Flat Plate Module in Northern California", 2000, 4 sheet, Proceedings of the 16th EPSEC.	☐
/D.P./	8	RICHARD M. SWANSON "The Promise of Concentrators", 2000, Prog. Photovolt. Res. Appl. 8, pages 93-111,	☐
/D.P./	9	RONALD A. SINTON, et al., "Simplified Backside-Contact Solar Cells", February 1990, pages 348-352, IEEE Transactions on Electron Devices, Vol. 37. No. 2.	☐
/D.P./	10	RONALD A. SINTON "Device Physics and Characterization of Silicon Point-Contact Solar Cells", February 1997, pages 1-154, Stanford Electronics Laboratories, Stanford University, CA.	☐
/D.P./	11	RICHARD ROLAND KING "Studies of Oxide-Passivated Emitters in Silicon and Applications to Solar Cells", August 1990, pages 1-200, (Thesis) Electrical Engineering Department of Stanford University, CA.	☐

If you wish to add additional non-patent literature document citation information please click the Add button Add

EXAMINER SIGNATURE

Examiner Signature	/Devina Pillay/	Date Considered	12/07/2009

*EXAMINER: Initial if reference considered, whether or not citation is in conformance with MPEP 609. Draw line through a citation if not in conformance and not considered. Include copy of this form with next communication to applicant.

[1] See Kind Codes of USPTO Patent Documents at www.USPTO.GOV or MPEP 901.04. [2] Enter office that issued the document, by the two-letter code (WIPO Standard ST.3). [3] For Japanese patent documents, the indication of the year of the reign of the Emperor must precede the serial number of the patent document. [4] Kind of document by the appropriate symbols as indicated on the document under WIPO Standard ST.16 if possible. [5] Applicant is to place a check mark here if English language translation is attached.

IN THE UNITED STATES PATENT AND TRADEMARK OFFICE

In re Application of:

Peter John Cousins

Application No.: 12/070,742 Examiner: PILLAY, DEVINA

Filing Date: February 20, 2008 Art Unit: 1795

Title: FRONT CONTACT SOLAR CELL WITH FORMED EMITTER

Honorable Commissioner for Patents
P.O. Box 1450
Alexandria, VA 22313-1450

RESPONSE TO OFFICE ACTION AND AMENDMENT

INTRODUCTORY COMMENTS

Sir:

This paper is responsive to the office action mailed on December 24, 2009 (hereinafter the "last office action").

Please amend the above-identified application as follows:

AMENDMENTS TO THE SPECIFICATION

A. Please replace the paragraph beginning at line 3 of page 8 with the following paragraph:

> In FIG. 4E, exposed regions on the front surface of the substrate 101 are ~~is~~ randomly textured to form the textured surface 113. In one embodiment, the front surface of the substrate 101 is textured with random pyramids using a wet etch process comprising potassium hydroxide and isopropyl alcohol.

REMARKS

Claims 1-8 and 17-20 remain in the application and stand rejected. Reconsideration of the rejection is respectfully requested in light of the following reasons.

Claim Rejection -- 35 U.S.C. § 103

Claims 1, 2, and 17-19 stand rejected under 35 U.S.C. § 103(a) as being unpatentable over U.S. Patent No. 6,262,359 to Meier et al. ("Meier") in view of U.S. Publication No. 2005/0268963 to Jordan et al. ("Jordan"). The rejection is respectfully traversed.

Claim 1 is patentable over the combination of Meier and Jordan at least for reciting: "a P-type polysilicon emitter forming a backside junction with the N-type silicon substrate" (emphasis added). The last office action suggests that Meier section 322 is a "P-type emitter." Applicant respectfully disagrees with this conclusion. Meier is explicit that:

> FIG. 6 shows a solar cell layer stack 300, in accordance with another embodiment of the present invention, that is substantially similar to the solar cell 110 of FIG. 2, except that solar cell 300 has only part of the back surface converted to a p-type layer, as indicated by sections 320, and covered with metal, as indicated by sections 322.
>
> Meier, col. 7, line 66 to col. 8, line 4 (emphasis added)

That, is, Meier does not teach or suggest that the sections 322 are P-type emitters. On the contrary, sections 322 represent an aluminum metal contact (Meier, col. 6, lines 26-28).

Claim 1 is further patentable over the combination Meier and Jordan at least for reciting a P-type polysilicon emitter that forms a junction with an N-type silicon substrate. It is respectfully submitted that Meier does not teach or suggest such an emitter-substrate configuration.

The last office action suggests that in the combination of Meier and Jordan, Jordan discloses a P-type polysilicon emitter and that it would have been obvious to

combine the teachings of Meier and Jordan to meet all the limitation of claim 1. Applicant respectfully disagrees.

Jordan discloses:

> [0010] One method for making photovoltaic cells having buried front contacts follows a processing sequence as follows. The n-layer is created in a p-type monocrystalline or multicrystalline silicon wafer by diffusing phosphorus into the p-type wafer thereby forming a p-n junction. A layer of a dielectric material, for example, a layer of silicon nitride, is applied to the surface of the wafer having the p-n junction. This dielectric material serves as both an anti-reflective coating, and, as described below, a mask. This will, ultimately, be the light receiving side of the cell. Using a laser, narrow and deep grooves are cut through the dielectric layer and into the silicon wafer in a pattern that will form the front buried contact. The grooves are etched with a chemical solution, such as sodium hydroxide, to further form the grooves and remove laser induced damage. Additional phosphorous is diffused into the walls of the grooves. The dielectric layer serves as a mask to limit the doping to the grooves. Such doping of the surfaces within the grooves completes the formation of the emitter layer and p-n junction. Prior to adding the front and back contacts, a back surface field is preferably added to the wafer by heavily p-doping the back surface of the wafer. Such p-doping can be achieved by applying aluminum or boron to the back surface of the wafer, typically by one or more sputtering or metal evaporation techniques known to those of skill in the art followed by a high temperature sintering step. The complete back surface and grooves in the front of the cell are filled with a conductor, for example, one or more of silver, nickel, or copper, by one or more methods such as electrolytic or electroless plating. The dielectric layer again serves as a mask so that the plating on the front side of the wafer is limited to the grooves. An edge isolation step separates any electrical connections between the front and back of the cell.
>
> Jordan, paragraph 10 (emphasis added)

Jordan discloses creating an n-layer in a p-type monocrystalline or multicrystalline silicon wafer by diffusion. That is, Jordan teaches use of different types of silicon substrates, within which the n-layer may be formed. Jordan does not teach or suggest the P-type emitter of claim 1, which comprises polysilicon over a silicon substrate. Jordan discloses conventional diffusion layer within the silicon substrate.

Therefore, it is respectfully submitted that claim 1 is patentable over the combination of Meier and Jordan.

Claim 2 depends on claim 1, and is thus patentable over the combination of Meier and Jordan at least for the same reasons that claim 1 is patentable.

Claim 17 is patentable over the combination of Meier and Jordan at least for reciting: "an emitter layer formed over a back surface of the substrate, the emitter layer forming a backside junction with the substrate." The plain language of claim 17 recites that the emitter layer is formed over a back surface of the substrate.

In Meier, the p+ emitter 320 is formed within the n-type silicon substrate 318 (Meier, FIG. 6). In Jordan, just like in Meier, the n-layer is formed within the silicon substrate (Jordan, paragraph 10). That is, **both Meier and Jordan disclose an emitter formed within the substrate**. In marked contrast, claim 17 recites an emitter layer formed over a back surface of the substrate. Therefore, it is respectfully submitted that claim 17 is patentable over the combination of Meier and Jordan.

Claim 19 depends on claim 17, and is thus patentable over the combination of Meier and Jordan at least for the same reasons that claim 17 is patentable.

Claims 1, 17, and 19 stands rejected under 35 U.S.C. §103(a) as being unpatentable over U.S. Patent No. 4,665,277 to Shah et al. ("Shah") in view of Jordan. The rejection is respectfully traversed.

Claim 1 is patentable over the combination of Shah and Jordan at least for reciting: "a negative polarity metal contact making an electrical connection to the N-type silicon substrate <u>from the front side</u> of the solar cell; and a positive polarity metal contact making an electrical connection to the P-type polysilicon emitter <u>from the backside</u> of the solar cell" (emphasis added). According to the last office, in the combination of Shah and Jordan, Shah discloses the recited negative polarity metal contact and positive polarity metal contact. Applicant respectfully disagrees with this conclusion. Shah FIG. 1B is reproduced below for ease of discussion.

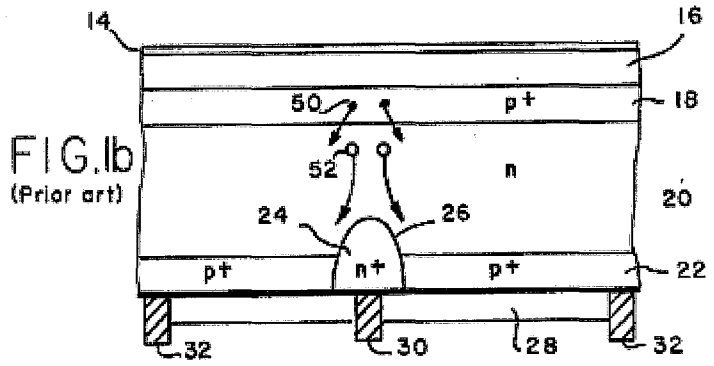

The last office action reads Shah contact 30 as the recited negative polarity metal contact and Shah contact 32 as the positive polarity metal contact. As evidenced in Shah FIG. 1B, both metal contacts 32 and 30 are on the same side of the solar cell. In marked contrast, claim 1 recites that the negative polarity metal contact connects from the front side of the solar cell, while the positive polarity metal contact connects from the backside of the solar cell. That is, the recited metal contacts of claim 1 are on different sides of the solar cell. Therefore, it is respectfully submitted that claim 1 is patentable over the combination of Shah and Jordan.

Claim 1 is further patentable over the combination of Shah and Jordan at least for reciting: "a P-type polysilicon emitter forming a backside junction with the N-type silicon substrate." Shad does not disclose the recited P-type polysilicon emitter.

In the combination of Shah and Jordan, the last office action suggests that Jordan discloses the recited P-type polysilicon emitter. As explained above, Jordan teaches use of different types of silicon substrates, within which an n-layer may be formed. Jordan does not teach or suggest the P-type emitter of claim 1, which comprises polysilicon over a silicon substrate. Jordan discloses conventional diffusion layer within the silicon substrate. Therefore, it is respectfully submitted that claim 1 is patentable over the combination of Shah and Jordan.

Claims 2-4 depend on claim 1, and are thus patentable over the combination of Shah and Jordan at least for the same reasons that claim 1 is patentable.

Claim 17 is patentable over the combination of Shah and Jordan at least for reciting: "a first metal contact making an electrical connection to the substrate on the

front side of the solar cell; and a second metal contact making an electrical connection to the emitter layer on the backside of the solar cell." As explained, the combination of Shah and Jordan does not teach or suggest a solar cell with metal contacts on the front and backsides of the solar cell.

Claim 17 is further patentable over the combination of Shah and Jordan at least for reciting: "an emitter layer formed over a back surface of the substrate, the emitter layer forming a backside junction with the substrate." The plain language of claim 17 recites that the emitter layer is formed over a back surface of the substrate. In marked contrast, both Shah and Jordan disclose an emitter formed within the substrate. Therefore, it is respectfully submitted that claim 17 is patentable over the combination of Shah and Jordan.

Claims 18 and 19 depend on claim 17, and are thus patentable over the combination of Shah and Jordan at least for the same reasons that claim 17 is patentable.

Claim 5 stands rejected under 35 U.S.C. § 103(a) as being unpatentable over Shah in view of Jordan as applied to claim 3 and further in view of U.S. Publication No. 2006/0157103 to Sheats et al. ("Sheats").

Claims 6, 7, and 20 stand rejected under 35 U.S.C. § 103(a) as being unpatentable over Shah in view of Jordan as applied to claim 1 above and in further view of U.S. Patent No. 4,427,839 to Hall ("Hall").

Claims 5, 6, 7, and 20 are patentable at least for depending on patentable base claims.

Conclusion

For at least the above reasons, it is respectfully submitted that claims 1-8 and 17-20 are allowable. The Examiner is invited to telephone the undersigned at (408)436-2112 for any questions.

If for any reason an insufficient fee has been paid, the Commissioner is hereby authorized to charge the insufficiency to Deposit Account No. 50-2427.

Respectfully submitted,
Peter John Cousins

Dated: March 19, 2010

/Patrick Benedicto/

Patrick D. Benedicto, Reg. No. 40,909
Okamoto & Benedicto LLP
P.O. Box 641330
San Jose, CA 95164
Tel.: (408)436-2110
Fax.: (408)436-2114

Electronic Acknowledgement Receipt

EFS ID:	7248483
Application Number:	12070742
International Application Number:	
Confirmation Number:	2015
Title of Invention:	Front contact solar cell with formed emitter
First Named Inventor/Applicant Name:	Peter John Cousins
Customer Number:	74254
Filer:	James K. Okamoto/jina mangaoang
Filer Authorized By:	James K. Okamoto
Attorney Docket Number:	10031.004200
Receipt Date:	19-MAR-2010
Filing Date:	20-FEB-2008
Time Stamp:	16:49:41
Application Type:	Utility under 35 USC 111(a)

Payment information:

Submitted with Payment	no

File Listing:

Document Number	Document Description	File Name	File Size(Bytes)/ Message Digest	Multi Part /.zip	Pages (if appl.)
1		S0123_ROAmailed24Dec2009.pdf	561198 12b6ecaf80c45b6f44bbbdf175ee671537f83ef6	yes	8

	Multipart Description/PDF files in .zip description		
	Document Description	**Start**	**End**
	Amendment/Req. Reconsideration-After Non-Final Reject	1	1
	Specification	2	2
	Applicant Arguments/Remarks Made in an Amendment	3	8

Warnings:	
Information:	
Total Files Size (in bytes):	561198

This Acknowledgement Receipt evidences receipt on the noted date by the USPTO of the indicated documents, characterized by the applicant, and including page counts, where applicable. It serves as evidence of receipt similar to a Post Card, as described in MPEP 503.

New Applications Under 35 U.S.C. 111
If a new application is being filed and the application includes the necessary components for a filing date (see 37 CFR 1.53(b)-(d) and MPEP 506), a Filing Receipt (37 CFR 1.54) will be issued in due course and the date shown on this Acknowledgement Receipt will establish the filing date of the application.

National Stage of an International Application under 35 U.S.C. 371
If a timely submission to enter the national stage of an international application is compliant with the conditions of 35 U.S.C. 371 and other applicable requirements a Form PCT/DO/EO/903 indicating acceptance of the application as a national stage submission under 35 U.S.C. 371 will be issued in addition to the Filing Receipt, in due course.

New International Application Filed with the USPTO as a Receiving Office
If a new international application is being filed and the international application includes the necessary components for an international filing date (see PCT Article 11 and MPEP 1810), a Notification of the International Application Number and of the International Filing Date (Form PCT/RO/105) will be issued in due course, subject to prescriptions concerning national security, and the date shown on this Acknowledgement Receipt will establish the international filing date of the application.

UNITED STATES PATENT AND TRADEMARK OFFICE

UNITED STATES DEPARTMENT OF COMMERCE
United States Patent and Trademark Office
Address: COMMISSIONER FOR PATENTS
P.O. Box 1450
Alexandria, Virginia 22313-1450
www.uspto.gov

APPLICATION NO.	FILING DATE	FIRST NAMED INVENTOR	ATTORNEY DOCKET NO.	CONFIRMATION NO.
12/070,742	02/20/2008	Peter John Cousins	10031.004200	2015

74254 7590 05/26/2010
Okamoto & Benedicto LLP
P.O. Box 641330
San Jose, CA 95164-1330

EXAMINER
PILLAY, DEVINA

ART UNIT	PAPER NUMBER
1795	

MAIL DATE	DELIVERY MODE
05/26/2010	PAPER

Please find below and/or attached an Office communication concerning this application or proceeding.

The time period for reply, if any, is set in the attached communication.

Office Action Summary	Application No.	Applicant(s)	
	12/070,742	COUSINS, PETER JOHN	
	Examiner	Art Unit	
	Devina Pillay	1795	

-- The MAILING DATE of this communication appears on the cover sheet with the correspondence address --

Period for Reply

A SHORTENED STATUTORY PERIOD FOR REPLY IS SET TO EXPIRE 3 MONTH(S) OR THIRTY (30) DAYS, WHICHEVER IS LONGER, FROM THE MAILING DATE OF THIS COMMUNICATION.

- Extensions of time may be available under the provisions of 37 CFR 1.136(a). In no event, however, may a reply be timely filed after SIX (6) MONTHS from the mailing date of this communication.
- If NO period for reply is specified above, the maximum statutory period will apply and will expire SIX (6) MONTHS from the mailing date of this communication.
- Failure to reply within the set or extended period for reply will, by statute, cause the application to become ABANDONED (35 U.S.C. § 133). Any reply received by the Office later than three months after the mailing date of this communication, even if timely filed, may reduce any earned patent term adjustment. See 37 CFR 1.704(b).

Status

1)☒ Responsive to communication(s) filed on *19 March 2010*.

2a)☒ This action is **FINAL**. 2b)☐ This action is non-final.

3)☐ Since this application is in condition for allowance except for formal matters, prosecution as to the merits is closed in accordance with the practice under *Ex parte Quayle*, 1935 C.D. 11, 453 O.G. 213.

Disposition of Claims

4)☒ Claim(s) *1-8 and 17-20* is/are pending in the application.

4a) Of the above claim(s) _____ is/are withdrawn from consideration.

5)☐ Claim(s) _____ is/are allowed.

6)☒ Claim(s) *1-8 and 17-20* is/are rejected.

7)☐ Claim(s) _____ is/are objected to.

8)☐ Claim(s) _____ are subject to restriction and/or election requirement.

Application Papers

9)☐ The specification is objected to by the Examiner.

10)☐ The drawing(s) filed on _____ is/are: a)☐ accepted or b)☐ objected to by the Examiner.

Applicant may not request that any objection to the drawing(s) be held in abeyance. See 37 CFR 1.85(a).

Replacement drawing sheet(s) including the correction is required if the drawing(s) is objected to. See 37 CFR 1.121(d).

11)☐ The oath or declaration is objected to by the Examiner. Note the attached Office Action or form PTO-152.

Priority under 35 U.S.C. § 119

12)☐ Acknowledgment is made of a claim for foreign priority under 35 U.S.C. § 119(a)-(d) or (f).

a)☐ All b)☐ Some * c)☐ None of:

1.☐ Certified copies of the priority documents have been received.

2.☐ Certified copies of the priority documents have been received in Application No. _____.

3.☐ Copies of the certified copies of the priority documents have been received in this National Stage application from the International Bureau (PCT Rule 17.2(a)).

* See the attached detailed Office action for a list of the certified copies not received.

Attachment(s)

1) ☐ Notice of References Cited (PTO-892)
2) ☐ Notice of Draftsperson's Patent Drawing Review (PTO-948)
3) ☐ Information Disclosure Statement(s) (PTO/SB/08) Paper No(s)/Mail Date _____.
4) ☐ Interview Summary (PTO-413) Paper No(s)/Mail Date. _____ .
5) ☐ Notice of Informal Patent Application
6) ☐ Other: _____.

DETAILED ACTION

Status of Application

1. The amendment filed on 3/19/2010 has been entered. Claims 1-8 and 17-20 remain pending in this action. The previous rejections under 35 U.S.C 103 are maintained.

Claim Rejections - 35 USC § 103

2. The factual inquiries set forth in *Graham* **v.** *John Deere Co.*, 383 U.S. 1, 148 USPQ 459 (1966), that are applied for establishing a background for determining obviousness under 35 U.S.C. 103(a) are summarized as follows:

1. Determining the scope and contents of the prior art.
2. Ascertaining the differences between the prior art and the claims at issue.
3. Resolving the level of ordinary skill in the pertinent art.
4. Considering objective evidence present in the application indicating obviousness or nonobviousness.

3. Claims 1, 2 and 17-19 are rejected under 35 U.S.C. 103(a) as being unpatentable over Meier et al. (US 6262359 B1) in view of Jordan (US2005/0268963 A1)

Regarding claims 1, 17 and 19, Meier discloses a solar cell (Fig. 6, C7/L65-C8/L36) having a front side (top side) facing the sun to collect solar radiation during normal operation and a backside opposite the front side, the solar cell comprising:

an N-type silicon substrate (318);

an antireflective layer (314) over the surface of the N-type silicon substrate (318); a P-type emitter forming a backside junction (324) with the N-type silicon substrate (320);

a negative polarity metal contact (312) making an electrical connection to the N-type silicon substrate (318) from the front side of the solar cell;

and a positive polarity metal contact (324) making an electrical connection to the P-type emitter (320) from the backside of the solar cell.

However, Meier does not disclose that there is a textured surface on the N-type silicon substrate on the front side of the solar cell and that the P-type emitter layer is polysilicon.

Jordan discloses that the front surface of the solar cell is textured ([0022]). In addition, Jordan discloses that texturizing the front surface increases light absorption ([0022]).

It would have been obvious to one of ordinary skill in the art at the time of the invention to modify the front surface of Meier by texturizing the front surface as disclosed by Jordan because it increases light adsorption.

Jordan addition discloses that a polycrystalline silicon or monocrystalline silicon wafer can be used to form the emitter layer ([0010]).

It would have been obvious to one of ordinary skill in the art at the time of the invention to modify the monocrystalline silicon emitter of Meier by using a polycrystalline silicon emitter region as disclosed by Jordan because it is an effective material for forming an emitter region.

The selection of a known material based on its suitability for its intended use supported a prima facie obviousness determination in *Sinclair & Carroll Co. v. Interchemical Corp.*, 325 U.S. 327, 65 USPQ 297 (1945).

Regarding claims 2 and 18, modified Meier discloses all of the claim limitations as set forth above.

In addition Meier discloses that the antireflective layer comprises silicon nitride (C6/L20-25).

Regarding claim 3, Meier discloses all of the claim limitations as set forth above.

Meier discloses an aluminum contact over the emitter surface. The aluminum contact will have an Al_2O_3 coating due to the formation of a native oxide. Therefore there is a dielectric layer over the P-type emitter.

Regarding claim 8, modified Meier discloses all of the claim limitations as set forth above.

In addition Meier discloses the negative polarity metal contact (312) comprises formed in a contact hole (314 has hole) to the n-type silicon substrate (318) (See Fig. 6).

4. Claims 1-4, 8 and 17-19 are rejected under 35 U.S.C. 103(a) as being unpatentable over Sah et al. (US 4665277) in view of Jordan (US2005/0268963 A1)

Regarding claims 1, 17 and 19, Sah discloses a solar cell (Fig. 4a, C7/L5-60) having a front side (top side) facing the sun to collect solar radiation during normal operation and a backside opposite the front side, the solar cell comprising:

an N-type silicon substrate (20”);

an antireflective layer (14”) over the surface of the N-type silicon substrate (20”); a P-type emitter forming a backside junction with the N-type silicon substrate (22”);

a negative polarity metal contact (30") making an electrical connection to the N-type silicon substrate (20") from the front side of the solar cell;

and a positive polarity metal contact (32") making an electrical connection to the P-type emitter (22") from the backside of the solar cell.

However, Sah does not disclose that there is a textured surface on the N-type silicon substrate on the front side of the solar cell and that the P-type emitter layer is polycrystalline silicon.

Jordan discloses that the front surface of the solar cell is textured ([0022]). In addition, Jordan discloses that texturizing the front surface increases light adsorption ([0022]).

It would have been obvious to one of ordinary skill in the art at the time of the invention to modify the front surface of Sah by texturizing the front surface as disclosed by Jordan because it increases light adsorption.

Jordan discloses that a polycrystalline silicon or monocrystalline silicon wafer can be used to form the emitter layer ([0010]).

It would have been obvious to one of ordinary skill in the art at the time of the invention to modify the monocrystalline silicon emitter of Sah by using a polycrystalline silicon emitter region as disclosed by Jordan because it is an effective material for forming an emitter region.

The selection of a known material based on its suitability for its intended use supported a prima facie obviousness determination in *Sinclair & Carroll Co. v. Interchemical Corp.*, 325 U.S. 327, 65 USPQ 297 (1945).

Regarding claims 2 and 18, modified Sah discloses all of the claim limitations as set forth above.

In addition Sah discloses an antireflective layer (14) (C3/L50-55).

However Sah does not disclose that the anitireflective layer is SiN.

Jordan discloses that the antireflective layer (30) on the front side of the solar cell that is formed of silicon nitride [0044].

It would have been obvious to one of ordinary skill in the art at the time of the invention to modify the antireflective coating of Sah by using a silicon nitride layer as an antireflective coating as disclosed by Jordan because it is a known effective material for providing an antireflective layer.

The selection of a known material based on its suitability for its intended use supported a prima facie obviousness determination in *Sinclair & Carroll Co. v. Interchemical Corp.*, 325 U.S. 327, 65 USPQ 297 (1945).

Regarding claim 3, modified Sah discloses all of the claim limitations as set forth above.

In addition Sah discloses a dielectric layer (28") over the P-type emitter (C7/L10-15).

Regarding claim 4, modified Sah discloses all of the claim limitations as set forth above.

In addition Sah discloses that the dielectric layer (28") comprises SiO_2(C7/L10-15).

Regarding claim 8, modified Sah discloses all of the claim limitations as set forth above.

In addition Sah discloses the negative polarity metal contact (30") comprises formed in a contact hole (12" has a hole) to the n-type silicon substrate (20") (See Fig. 4b).

5. Claim 5 is rejected under 35 U.S.C. 103(a) as being unpatentable over Sah et al. (US 4665277) in view of Jordan (US2005/0268963 A1) as applied to claim 3 above and in view of Sheats (US 206/0157103).

Regarding claim 5, modified Sah discloses all of the claim limitations as set forth above.

However modified Sah does not disclose a trench through the dielectric layer and the p-type polycrystalline silicon emitter and into a portion of the n-type silicon substrate on the backside of the solar cell.

Sheats discloses trench cutting through the layers on a solar cell to the substrate ([0059]).

Sheats discloses that this results in edge isolation which prevents short circuits on the outside walls of the device ([0059]).

It would have been obvious to one of ordinary skill in the art at the time of the invention to modify the dielectric layer and p-type silicon emitter layer of modified Sah by forming a trench in the through the dielectric layer and the p-type polycrystalline silicon emitter and into a portion of the n-type silicon substrate on the backside of the solar cell as disclosed by Sheats because it results in edge isolation which prevents short circuits on the outside walls of the device.

6. Claims 6, 7 and 20 are rejected under 35 U.S.C. 103(a) as being unpatentable over Sah et al. (US 4665277) in view of Jordan (US2005/0268963 A1) as applied to claim 1 above in further view of Hall (US 4427839).

Regarding claim 6, modified Sah discloses all of the claim limitations as set forth above.

Sah discloses a metal contact (31) that is placed on a dielectric layer (23) (Fig. 4b).

However Sah does not disclose that the positive polarity metal contact comprises a metal forming an infrared reflecting layer with a dielectric layer.

Hall discloses a contact on solar cell which comprises a metal contact and dielectric layer (C4/L18-45).

Hall additionally discloses that the metal electrode acts as a reflective layer which increases the adsorption of incident light (C4/L18-L45).

It would have been obvious to one of ordinary skill in the art at the time of the invention to modify the positive polarity metal contact of Sah by using a metal forming an infrared reflecting layer with a dielectric layer as disclosed by Hall because it results in higher light adsorption and is an effective material to form an electrode.

Regarding claims 7 and 20, modified Sah discloses all of the claim limitations as set forth above.

Sah discloses a metal contact (31) that is placed on a dielectric layer (23) (Fig. 4b).

However Sah does not disclose that the positive polarity metal contact comprises silver forming an infrared reflecting layer with a dielectric layer.

Hall discloses a contact on solar cell which comprises a silver contact (36)and dielectric layer (40) (See Fig. 2b) (C4/L18-45).

Hall additionally discloses that the metal electrode acts as a reflective layer which increases the adsorption of incident light (C4/L18-L45).

It would have been obvious to one of ordinary skill in the art at the time of the invention to modify the positive polarity metal contact of Sah by using silver with a dielectric layer as disclosed by Hall because it results in higher light adsorption and is an effective material to form an electrode.

As disclosed by McKee et al. (US5479018) silver is a highly reflective material in the infrared wavelength (C6/L40-45).

Response to Arguments

7. Regarding claim 1, Applicant argues that Meier does not teach or suggest that the section 322 is a p-type emitter section.

Examiner responds that Meier teaches that the section 320 is a p-type emitter, not section 322. Examiner indicates that an inadvertent error was made in labeling the emitter section 322. The contact is 322 and the emitter is 320. However, Meier does indicated this in the sections C/7L65-C8/L36 as outlined in the office action.

Meier specifically states that "*FIG. 6 shows a solar cell layer stack 300, in accordance with another embodiment of the present invention, that is substantially similar to the solar cell 110 of FIG. 2, except that solar cell 300 has only part of the back*

surface converted to a p-type layer, as indicated by sections 320, and covered with metal, as indicated by sections 322.".

Meier states that layer 120 in Fig. 2 which is analogous to 320 in Fig. 6 is a p-type emitter. Meier states "*A p-n junction 124 is formed at non-illuminated surface 128 or the interface between base layer 118 and an aluminum doped silicon layer 120, which functions as a* p^+ *emitter layer in the solar cell layer stack of the present invention*."

Applicant argues that Jordan does not teach a p-type polycrystalline silicon emitter.

Examiner replies that Jordan is not relied upon to teach a p-type polycrystalline silicon emitter.

Jordan teaches that a monocrystalline or polycrystalline silicon wafer can be used to form a photovoltaic device of similar type to Meier. Furthermore Jordan teaches that an n-type polycrystalline silicon substrate can be used.

It would have been obvious to one of ordinary skill in the art at the time of the invention to modify the monocrystalline substrate of Meier by using the polycrystalline substrate as disclosed by Jordan because it would form a functioning photovoltaic device.

Examiner responds that once the polycrystalline silicon substrate is used than then the p-type emitter region will be polycrystalline.

8. Regarding claim 17, Applicant argues that neither Meier nor Jordan teach an emitter over a back surface of the substrate, the emitter layer forming a backside junction with a substrate".

Examiner responds that layer 320 (as explained above is an emitter) is formed over a back surface of the substrate as illustrated in Fig. 6.

9. Regarding claim 17, Applicant argues that Sah does not teach an emitter over a back surface of the substrate, the emitter layer forming a backside junction with a substrate".

Examiner responds that layer (22"-p type emitter) is formed over a back surface of the n-type substrate.

10. Regarding claim 1, Applicant argues that Sah does not teach that the negative polarity metal contact makes electrical contact to the n-type silicon substrate from the front side and indicates Fig. 1b. In addition Applicant argues that the positive polarity metal contact is on the same side as the negative polarity contact when they are supposed to be on opposite sides and indicates Fig. 1b.

Examiner discloses that the rejection points to Fig. 4a. Figure 4a does show that the negative polarity metal contact (30") ***does make*** electrical contact to the n-type silicon substrate from the front side and the positive polarity contact (32") does make electrical contact from the opposite side.

Applicant argues that Jordan does not teach a p-type polycrystalline silicon emitter.

Examiner replies that Jordan is not relied upon to teach a p-type polycrystalline silicon emitter.

Jordan teaches that a monocrystalline or polycrystalline silicon wafer can be used to form a photovoltaic device of similar type to Sah. Furthermore Jordan teaches that an n-type polycrystalline silicon substrate can be used.

It would have been obvious to one of ordinary skill in the art at the time of the invention to modify the monocrystalline substrate of Meier by using the polycrystalline substrate as disclosed by Jordan because it would form a functioning photovoltaic device.

Examiner responds that once the polycrystalline silicon substrate is used than then the p-type emitter region will be polycrystalline in the device of Sah.

Conclusion

10. **THIS ACTION IS MADE FINAL.** Applicant is reminded of the extension of time policy as set forth in 37 CFR 1.136(a).

A shortened statutory period for reply to this final action is set to expire THREE MONTHS from the mailing date of this action. In the event a first reply is filed within TWO MONTHS of the mailing date of this final action and the advisory action is not mailed until after the end of the THREE-MONTH shortened statutory period, then the shortened statutory period will expire on the date the advisory action is mailed, and any extension fee pursuant to 37 CFR 1.136(a) will be calculated from the mailing date of the advisory action. In no event, however, will the statutory period for reply expire later than SIX MONTHS from the mailing date of this final action.

11. Any inquiry concerning this communication or earlier communications from the examiner should be directed to Devina Pillay whose telephone number is (571)270-1180. The examiner can normally be reached on Monday thru Friday 7:30am -5:00pm (EST).

If attempts to reach the examiner by telephone are unsuccessful, the examiner's supervisor, Basia Ridley can be reached on 571-272-1453. The fax phone number for the organization where this application or proceeding is assigned is 571-273-8300.

Information regarding the status of an application may be obtained from the Patent Application Information Retrieval (PAIR) system. Status information for published applications may be obtained from either Private PAIR or Public PAIR. Status information for unpublished applications is available through Private PAIR only. For more information about the PAIR system, see http://pair-direct.uspto.gov. Should you have questions on access to the Private PAIR system, contact the Electronic Business Center (EBC) at 866-217-9197 (toll-free). If you would like assistance from a USPTO Customer Service Representative or access to the automated information system, call 800-786-9199 (IN USA OR CANADA) or 571-272-1000.

/D. P./
Examiner, Art Unit 1795

/Jeffrey T. Barton/
Primary Examiner, Art Unit 1795
24 May 2010

Search Notes	Application/Control No.	Applicant(s)/Patent Under Reexamination
	12070742	COUSINS, PETER JOHN
	Examiner	**Art Unit**
	Devina Pillay	1795

SEARCHED

Class	Subclass	Date	Examiner
136	255	12/8/2009	DP

SEARCH NOTES

Search Notes	Date	Examiner
Inventor name search in PALM	12/8/2009	DP
EAST Text Search (See Search History)	12/8/2009	DP
Updated Inventor name search in PALM	5/20/2010	DP

INTERFERENCE SEARCH

Class	Subclass	Date	Examiner

PTO/SB/30 (07-09)
Approved for use through 07/31/2012. OMB 0651-0031
U.S. Patent and Trademark Office; U.S. DEPARTMENT OF COMMERCE
Under the Paperwork Reduction Act of 1995, no persons are required to respond to a collection of information unless it contains a valid OMB control number.

Request for Continued Examination (RCE) Transmittal

Address to:
Mail Stop RCE
Commissioner for Patents
P.O. Box 1450
Alexandria, VA 22313-1450

Application Number	12/070,742
Filing Date	02/20/2008
First Named Inventor	Peter John Cousins
Art Unit	1795
Examiner Name	Pillay, Devina
Attorney Docket Number	10031.004200

This is a Request for Continued Examination (RCE) under 37 CFR 1.114 of the above-identified application.
Request for Continued Examination (RCE) practice under 37 CFR 1.114 does not apply to any utility or plant application filed prior to June 8, 1995, or to any design application. See Instruction Sheet for RCEs (not to be submitted to the USPTO) on page 2.

1. Submission required under 37 CFR 1.114 Note: If the RCE is proper, any previously filed unentered amendments and amendments enclosed with the RCE will be entered in the order in which they were filed unless applicant instructs otherwise. If applicant does not wish to have any previously filed unentered amendment(s) entered, applicant must request non-entry of such amendment(s).

a. ☐ Previously submitted. If a final Office action is outstanding, any amendments filed after the final Office action may be considered as a submission even if this box is not checked.

i. ☐ Consider the arguments in the Appeal Brief or Reply Brief previously filed on _____

ii. ☐ Other _____

b. ☑ Enclosed

I. ☑ Amendment/Reply

ii. ☐ Affidavit(s)/ Declaration(s)

iii. ☐ Information Disclosure Statement (IDS)

iv. ☐ Other _____

2. Miscellaneous

a. ☐ Suspension of action on the above-identified application is requested under 37 CFR 1.103(c) for a period of _____ months. (Period of suspension shall not exceed 3 months; Fee under 37 CFR 1.17(i) required)

b. ☐ Other _____

3. Fees The RCE fee under 37 CFR 1.17(e) is required by 37 CFR 1.114 when the RCE is filed.

a. ☑ The Director is hereby authorized to charge the following fees, any underpayment of fees, or credit any overpayments, to Deposit Account No. 50-2427.

i. ☐ RCE fee required under 37 CFR 1.17(e)

ii. ☐ Extension of time fee (37 CFR 1.136 and 1.17)

iii. ☑ Other charge any underpayment of fees of credit any overpayments

b. ☐ Check in the amount of $ _____ enclosed

c. ☑ Payment by credit card ~~(Form PTO-2038 enclosed)~~

WARNING: Information on this form may become public. Credit card information should not be included on this form. Provide credit card information and authorization on PTO-2038.

SIGNATURE OF APPLICANT, ATTORNEY, OR AGENT REQUIRED

Signature	/Patrick D. Benedicto/	Date	July 23 ,2010
Name (Print/Type)	PATRICK D. BENEDICTO	Registration No.	40,909

CERTIFICATE OF MAILING OR TRANSMISSION

I hereby certify that this correspondence is being deposited with the United States Postal Service with sufficient postage as first class mail in an envelope addressed to: Mail Stop RCE, Commissioner for Patents, P. O. Box 1450, Alexandria, VA 22313-1450 or facsimile transmitted to the U.S. Patent and Trademark Office on the date shown below.

Signature			
Name (Print/Type)		Date	

This collection of information is required by 37 CFR 1.114. The information is required to obtain or retain a benefit by the public which is to file (and by the USPTO to process) an application. Confidentiality is governed by 35 U.S.C. 122 and 37 CFR 1.11 and 1.14. This collection is estimated to take 12 minutes to complete, including gathering, preparing, and submitting the completed application form to the USPTO. Time will vary depending upon the individual case. Any comments on the amount of time you require to complete this form and/or suggestions for reducing this burden, should be sent to the Chief Information Officer, U.S. Patent and Trademark Office, U.S. Department of Commerce, P.O. Box 1450, Alexandria, VA 22313-1450. DO NOT SEND FEES OR COMPLETED FORMS TO THIS ADDRESS. **SEND TO: Mail Stop RCE, Commissioner for Patents, P.O. Box 1450, Alexandria, VA 22313-1450.**
If you need assistance in completing the form, call 1-800-PTO-9199 and select option 2.

IN THE UNITED STATES PATENT AND TRADEMARK OFFICE

In re Application of:

Peter John Cousins

Application No.: 12/070,742 Examiner: PILLAY, DEVINA

Filing Date: February 20, 2008 Art Unit: 1795

Title: FRONT CONTACT SOLAR CELL WITH FORMED EMITTER

Honorable Commissioner for Patents
P.O. Box 1450
Alexandria, VA 22313-1450

REQUEST FOR CONTINUED EXAMINATION AND AMENDMENT

INTRODUCTORY COMMENTS

Sir:

This paper, which is being filed as an RCE, is responsive to the office action mailed on May 26, 2010 (hereinafter the "last office action").

Please amend the above-identified application as follows:

AMENDMENT TO THE SPECIFICATION

Please insert the following section on page 1 of the specification, after the title and named inventor(s), and before the "BACKGROUND OF THE INVENTION".

STATEMENT REGARDING FEDERALLY SPONSORED RESEARCH OR DEVELOPMENT

The invention described herein was made with Governmental support under contract number DE-FC36-07GO17043 awarded by the United States Department of Energy. The Government may have certain rights in the invention.

Please replace the paragraph beginning at page 3, line 21 with the following paragraph.

In the example of FIG. 1, the solar cell 100 includes a backside junction formed by a P-type doped polysilicon emitter 108 serving as a P-type diffusion region and an N-type silicon substrate 101 ~~servings~~ serving as an N-type diffusion region. The N-type silicon substrate 101 may comprise a long lifetime (e.g., 2 to 5ms) N-type silicon wafer and may have a thickness of about 100 to 250 μm as measured from the backside surface to a tip of the textured front side surface of the substrate. The front side surface of the substrate 101 is randomly textured (labeled as 113) and includes N-type doped regions 105 and 106 formed in the substrate. The N-type doped region 105 provides low front surface recombination and improves lateral conductivity whilst not compromising the blue response of the solar cell. The region 106, which may be a phosphorus diffusion, provides low contact resistance and minimizes contact recombination. The region 106 is also referred to as an "N-dot" because, in one embodiment, it forms a dot-shape to minimize the area of heavily diffused regions on the front surface. The N-type

doped region 105 may have a sheet resistance of 100 to 500 Ω/sq, whilst the n-type doped region 106 may have a sheet resistance of 10 to 50 Ω/sq.

AMENDMENT TO THE CLAIMS

1. (currently amended) A solar cell having a front side facing the sun to collect solar radiation during normal operation and a backside opposite the front side, the solar cell comprising:

an N-type silicon substrate;

a textured surface on the N-type silicon substrate on the front side of the solar cell;

an antireflective layer over the textured surface of the N-type silicon substrate;

a P-type polysilicon emitter formed over the N-type silicon substrate and forming a backside junction with the N-type silicon substrate;

an oxide layer formed between the P-type polysilicon emitter and the N-type silicon substrate;

a negative polarity metal contact making an electrical connection to the N-type silicon substrate from the front side of the solar cell; and

a positive polarity metal contact making an electrical connection to the P-type polysilicon emitter from the backside of the solar cell.

2. (original) The solar cell of claim 1 wherein the antireflective layer comprises a layer of silicon nitride.

3. (original) The solar cell of claim 1 further comprising a dielectric layer over the P-type polysilicon emitter.

4. (original) The solar cell of claim 3 wherein the dielectric layer comprises silicon dioxide.

5. (original) The solar cell of claim 3 further comprising a trench cutting through the dielectric layer and the P-type polysilicon emitter and into a portion of the N-type silicon substrate on the backside of the solar cell.

6. (original) The solar cell of claim 1wherein the positive polarity metal contact comprises a metal forming an infrared reflecting layer with a dielectric layer.

7. (original) The solar cell of claim 1 wherein the positive polarity metal contact comprises silver forming an infrared reflecting layer with a dielectric layer comprising silicon dioxide.

8. (original) The solar cell of claim 1 wherein the negative polarity metal contact comprises a metal formed in a contact hole to the N-type silicon substrate.

9-16. (canceled)

17. (currently amended) A solar cell having a front side facing the sun to collect solar radiation during normal operation and a backside opposite the front side, the solar cell comprising:

a substrate having a textured front surface;

an emitter layer formed over a back surface of the substrate, the emitter layer forming a backside junction with the substrate;

<u>an oxide layer formed between the back surface of the substrate and the emitter layer;</u>

a first metal contact making an electrical connection to the substrate on the front side of the solar cell; and

a second metal contact making an electrical connection to the emitter layer on the backside of the solar cell, the first metal contact and the second metal contact being configured to allow an external electrical circuit to be powered by the solar cell.

18. (original) The solar cell of claim 17 further comprising an antireflective layer over the textured front surface of the substrate.

19. (original) The solar cell of claim 17 wherein the substrate comprises an N-type silicon substrate and the emitter layer comprises a P-type doped polysilicon.

20. (original) The solar cell of claim 17 wherein the second metal contact comprises silver formed over a layer of silicon dioxide.

REMARKS

Claims 1-8 and 17-20 remain in the application and stand rejected. Reconsideration of the rejection is respectfully requested in light of the following reasons.

Claims 1 and 17 have been amended to expedite prosecution. Applicant expressly reserves the right to pursue the original version of these claims in a continuing application.

Claim Rejection -- 35 U.S.C. § 103

Claims 1, 2, and 17-19 stand rejected under 35 U.S.C. § 103(a) as being unpatentable over U.S. Patent No. 6,262,359 to Meier et al. ("Meier") in view of U.S. Publication No. 2005/0268963 to Jordan et al. ("Jordan"). The rejection is respectfully traversed.

Claim 1 is patentable over the combination of Meier and Jordan at least for reciting: "an oxide layer formed between the P-type polysilicon emitter and the N-type silicon substrate." In the combination of Meier and Jordan, the last office action suggests that the recited P-type emitter is met by Meier P-type emitter 320. Meier FIG. 6 is reproduced below for ease of discussion.

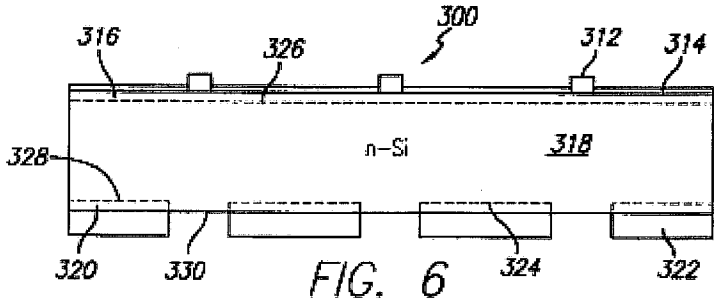

FIG. 6

It is respectfully submitted that in Meier, the emitter 320 is within, not over, the n-type substrate 318. That is, an oxide layer cannot be formed between the emitter 320 and the substrate 318.

Jordan discloses creating an n-layer in a p-type monocrystalline or multicrystalline silicon wafer by diffusion (Jordan, paragraph 10). That is, Jordan

teaches use of different types of silicon substrates, within which the n-layer may be formed. Jordan does not teach or suggest the P-type emitter of claim 1, which comprises polysilicon over a silicon substrate. Jordan discloses conventional diffusion layer within the silicon substrate. In any event, regardless of the material of the substrate in Jordan or Meier, an oxide layer cannot be formed between the emitter and the substrate in Jordan or Meier.

Furthermore, to the extent the last office action is taking the position "that once a polycrystalline silicon substrate is used, then a p-type emitter region will be polycrystalline," Jordan's disclosure is only relevant in solar cells where the emitter is within the substrate. This is not the case in claim 1, where there is an oxide layer between the substrate and the emitter.

Therefore, it is respectfully submitted that claim 1 is patentable over the combination of Meier and Jordan.

Claim 2 depends on claim 1, and is thus patentable over the combination of Meier and Jordan at least for the same reasons that claim 1 is patentable.

Claim 17 is patentable over the combination of Meier and Jordan at least for reciting: "an oxide layer formed between the back surface of the substrate and the emitter layer." In Meier, the p+ emitter 320 is formed within the n-type silicon substrate 318 (Meier, FIG. 6). In Jordan, just like in Meier, the n-layer is formed within the silicon substrate (Jordan, paragraph 10). Therefore, the combination of Meier and Jordan cannot teach or fairly suggest an oxide layer formed between the substrate and the emitter layer.

Claim 19 depends on claim 17, and is thus patentable over the combination of Meier and Jordan at least for the same reasons that claim 17 is patentable.

Claims 1-4, 8, 17, and 19 stand rejected under 35 U.S.C. §103(a) as being unpatentable over U.S. Patent No. 4,665,277 to Sah et al. ("Sah") in view of Jordan. The rejection is respectfully traversed.

Claim 1 is patentable over the combination of Sah and Jordan at least for reciting: "an oxide layer formed between the P-type polysilicon emitter and the N-type silicon

substrate." Sah FIG. 4a, cited in the last office action, is reproduced below for ease of discussion.

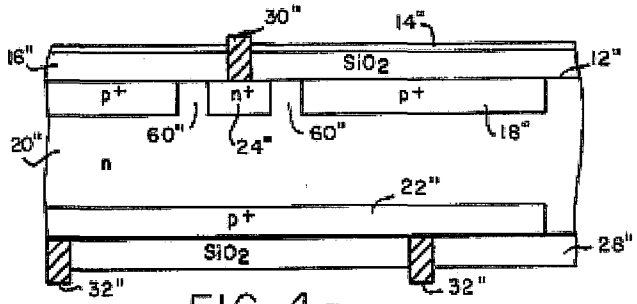

FIG. 4a

Sah discloses a solar cell transistor having a base 20, a collector 22", and an emitter 18". The last office action reads the collector 22" as a p-type emitter. As is explicit in Sah, the collector 22" is a collector, not an emitter (e.g., Sah, col. 6, lines 7-9).

In any event, Sah does not disclose an oxide layer formed between a P-type polysilicon emitter and an N-type silicon substrate. As explained above, neither does Jordan. Therefore, it is respectfully submitted that claim 1 is patentable over the combination of Sah and Jordan.

Claims 2-4 and 8 depend on claim 1, and are thus patentable over the combination of Sah and Jordan at least for the same reasons that claim 1 is patentable.

Claim 17 is patentable over the combination of Sah and Jordan at least for reciting: "an oxide layer formed between the back surface of the substrate and the emitter layer." The combination of Sah and Jordan does not teach or fairly suggest an oxide layer formed between the substrate and the emitter.

Claims 18 and 19 depend on claim 17, and are thus patentable over the combination of Sah and Jordan at least for the same reasons that claim 17 is patentable.

Claim 5 stands rejected under 35 U.S.C. § 103(a) as being unpatentable over Sah in view of Jordan as applied to claim 3 and further in view of U.S. Publication No. 2006/0157103 to Sheats et al. ("Sheats").

Claims 6, 7, and 20 stand rejected under 35 U.S.C. § 103(a) as being unpatentable over Sah in view of Jordan as applied to claim 1 above and in further view of U.S. Patent No. 4,427,839 to Hall ("Hall").

Claims 5, 6, 7, and 20 are patentable at least for depending on patentable base claims.

Request For Interview

In the interest of compact prosecution, the undersigned requests an interview with the Examiner to resolve any issues that the Examiner may still have.

Conclusion

For at least the above reasons, it is respectfully submitted that claims 1-8 and 17-20 are allowable. The Examiner is invited to telephone the undersigned at (408)436-2112 for any questions.

If for any reason an insufficient fee has been paid, the Commissioner is hereby authorized to charge the insufficiency to Deposit Account No. 50-2427.

Respectfully submitted,
Peter John Cousins

Dated: July 23, 2010

/Patrick Benedicto/
Patrick D. Benedicto, Reg. No. 40,909
Okamoto & Benedicto LLP
P.O. Box 641330
San Jose, CA 95164
Tel.: (408)436-2110
Fax.: (408)436-2114

Electronic Patent Application Fee Transmittal

Application Number:	12070742
Filing Date:	20-Feb-2008
Title of Invention:	Front contact solar cell with formed emitter
First Named Inventor/Applicant Name:	Peter John Cousins
Filer:	Patrick D. Benedicto
Attorney Docket Number:	10031.004200

Filed as Large Entity

Utility under 35 USC 111(a) Filing Fees

Description	Fee Code	Quantity	Amount	Sub-Total in USD($)
Basic Filing:				
Pages:				
Claims:				
Miscellaneous-Filing:				
Petition:				
Patent-Appeals-and-Interference:				
Post-Allowance-and-Post-Issuance:				
Extension-of-Time:				

Description	Fee Code	Quantity	Amount	Sub-Total in USD($)
Miscellaneous:				
Request for continued examination	1801	1	810	810
		Total in USD ($)		**810**

Electronic Acknowledgement Receipt

EFS ID:	8081840
Application Number:	12070742
International Application Number:	
Confirmation Number:	2015
Title of Invention:	Front contact solar cell with formed emitter
First Named Inventor/Applicant Name:	Peter John Cousins
Customer Number:	74254
Filer:	Patrick D. Benedicto
Filer Authorized By:	
Attorney Docket Number:	10031.004200
Receipt Date:	23-JUL-2010
Filing Date:	20-FEB-2008
Time Stamp:	17:43:14
Application Type:	Utility under 35 USC 111(a)

Payment information:

Submitted with Payment	yes
Payment Type	Credit Card
Payment was successfully received in RAM	$810
RAM confirmation Number	3985
Deposit Account	
Authorized User	

File Listing:

Document Number	Document Description	File Name	File Size(Bytes)/ Message Digest	Multi Part /.zip	Pages (if appl.)

1	Request for Continued Examination (RCE)	RCE-sb0030.pdf	137051 021065f363b3594cd585959f1af64f4b0362c232	no	1
Warnings:					
This is not a USPTO supplied RCE SB30 form.					
Information:					
2	Amendment Submitted/Entered with Filing of CPA/RCE	S0123-RFOAmailed26May2010.pdf	582424 4eeff120eb831d484a17c0ea16a5777184011ae8	no	10
Warnings:					
Information:					
3	Fee Worksheet (PTO-875)	fee-info.pdf	29730 e03472bdcaee97f0c328bdec2d65750dfe8699dd	no	2
Warnings:					
Information:					
			Total Files Size (in bytes):	749205	

This Acknowledgement Receipt evidences receipt on the noted date by the USPTO of the indicated documents, characterized by the applicant, and including page counts, where applicable. It serves as evidence of receipt similar to a Post Card, as described in MPEP 503.

<u>New Applications Under 35 U.S.C. 111</u>
If a new application is being filed and the application includes the necessary components for a filing date (see 37 CFR 1.53(b)-(d) and MPEP 506), a Filing Receipt (37 CFR 1.54) will be issued in due course and the date shown on this Acknowledgement Receipt will establish the filing date of the application.

<u>National Stage of an International Application under 35 U.S.C. 371</u>
If a timely submission to enter the national stage of an international application is compliant with the conditions of 35 U.S.C. 371 and other applicable requirements a Form PCT/DO/EO/903 indicating acceptance of the application as a national stage submission under 35 U.S.C. 371 will be issued in addition to the Filing Receipt, in due course.

<u>New International Application Filed with the USPTO as a Receiving Office</u>
If a new international application is being filed and the international application includes the necessary components for an international filing date (see PCT Article 11 and MPEP 1810), a Notification of the International Application Number and of the International Filing Date (Form PCT/RO/105) will be issued in due course, subject to prescriptions concerning national security, and the date shown on this Acknowledgement Receipt will establish the international filing date of the application.

PTO/SB/06 (07-06)
Approved for use through 1/31/2007. OMB 0651-0032
U.S. Patent and Trademark Office; U.S. DEPARTMENT OF COMMERCE
Under the Paperwork Reduction Act of 1995, no persons are required to respond to a collection of information unless it displays a valid OMB control number.

PATENT APPLICATION FEE DETERMINATION RECORD

Substitute for Form PTO-875

Application or Docket Number	Filing Date	
12/070,742	02/20/2008	☐ To be Mailed

APPLICATION AS FILED – PART I

FOR	(Column 1) NUMBER FILED	(Column 2) NUMBER EXTRA	SMALL ENTITY ☐ RATE ($)	SMALL ENTITY FEE ($)	OR	OTHER THAN SMALL ENTITY RATE ($)	OTHER THAN SMALL ENTITY FEE ($)
☐ BASIC FEE (37 CFR 1.16(a), (b), or (c))	N/A	N/A	N/A			N/A	
☐ SEARCH FEE (37 CFR 1.16(k), (i), or (m))	N/A	N/A	N/A			N/A	
☐ EXAMINATION FEE (37 CFR 1.16(o), (p), or (q))	N/A	N/A	N/A			N/A	
TOTAL CLAIMS (37 CFR 1.16(i))	minus 20 =	*	X $ =		OR	X $ =	
INDEPENDENT CLAIMS (37 CFR 1.16(h))	minus 3 =	*	X $ =			X $ =	
☐ APPLICATION SIZE FEE (37 CFR 1.16(s))	If the specification and drawings exceed 100 sheets of paper, the application size fee due is $250 ($125 for small entity) for each additional 50 sheets or fraction thereof. See 35 U.S.C. 41(a)(1)(G) and 37 CFR 1.16(s).						
☐ MULTIPLE DEPENDENT CLAIM PRESENT (37 CFR 1.16(j))							
* If the difference in column 1 is less than zero, enter "0" in column 2.			TOTAL			TOTAL	

APPLICATION AS AMENDED – PART II

AMENDMENT 07/23/2010

	(Column 1) CLAIMS REMAINING AFTER AMENDMENT		(Column 2) HIGHEST NUMBER PREVIOUSLY PAID FOR	(Column 3) PRESENT EXTRA	SMALL ENTITY RATE ($)	SMALL ENTITY ADDITIONAL FEE ($)	OR	OTHER THAN SMALL ENTITY RATE ($)	OTHER THAN SMALL ENTITY ADDITIONAL FEE ($)
Total (37 CFR 1.16(i))	* 12	Minus	** 20	= 0	X $ =		OR	X $52=	0
Independent (37 CFR 1.16(h))	* 2	Minus	***3	= 0	X $ =		OR	X $220=	0
☐ Application Size Fee (37 CFR 1.16(s))									
☐ FIRST PRESENTATION OF MULTIPLE DEPENDENT CLAIM (37 CFR 1.16(j))							OR		
					TOTAL ADD'L FEE		OR	TOTAL ADD'L FEE	0

AMENDMENT

	(Column 1) CLAIMS REMAINING AFTER AMENDMENT		(Column 2) HIGHEST NUMBER PREVIOUSLY PAID FOR	(Column 3) PRESENT EXTRA	RATE ($)	ADDITIONAL FEE ($)		RATE ($)	ADDITIONAL FEE ($)
Total (37 CFR 1.16(i))	*	Minus	**	=	X $ =		OR	X $ =	
Independent (37 CFR 1.16(h))	*	Minus	***	=	X $ =		OR	X $ =	
☐ Application Size Fee (37 CFR 1.16(s))									
☐ FIRST PRESENTATION OF MULTIPLE DEPENDENT CLAIM (37 CFR 1.16(j))							OR		
					TOTAL ADD'L FEE		OR	TOTAL ADD'L FEE	

* If the entry in column 1 is less than the entry in column 2, write "0" in column 3.
** If the "Highest Number Previously Paid For" IN THIS SPACE is less than 20, enter "20".
*** If the "Highest Number Previously Paid For" IN THIS SPACE is less than 3, enter "3".
The "Highest Number Previously Paid For" (Total or Independent) is the highest number found in the appropriate box in column 1.

Legal Instrument Examiner:
/PAMELA THERATT/

This collection of information is required by 37 CFR 1.16. The information is required to obtain or retain a benefit by the public which is to file (and by the USPTO to process) an application. Confidentiality is governed by 35 U.S.C. 122 and 37 CFR 1.14. This collection is estimated to take 12 minutes to complete, including gathering, preparing, and submitting the completed application form to the USPTO. Time will vary depending upon the individual case. Any comments on the amount of time you require to complete this form and/or suggestions for reducing this burden, should be sent to the Chief Information Officer, U.S. Patent and Trademark Office, U.S. Department of Commerce, P.O. Box 1450, Alexandria, VA 22313-1450. DO NOT SEND FEES OR COMPLETED FORMS TO THIS ADDRESS. **SEND TO: Commissioner for Patents, P.O. Box 1450, Alexandria, VA 22313-1450.**
If you need assistance in completing the form, call 1-800-PTO-9199 and select option 2.

UNITED STATES PATENT AND TRADEMARK OFFICE

UNITED STATES DEPARTMENT OF COMMERCE
United States Patent and Trademark Office
Address: COMMISSIONER FOR PATENTS
P.O. Box 1450
Alexandria, Virginia 22313-1450
www.uspto.gov

NOTICE OF ALLOWANCE AND FEE(S) DUE

74254 7590 03/28/2012
Okamoto & Benedicto LLP
P.O. Box 641330
San Jose, CA 95164-1330

EXAMINER
PILLAY, DEVINA

ART UNIT	PAPER NUMBER
1725	

DATE MAILED: 03/28/2012

APPLICATION NO.	FILING DATE	FIRST NAMED INVENTOR	ATTORNEY DOCKET NO.	CONFIRMATION NO.
12/070,742	02/20/2008	Peter John Cousins	10031.004200	2015

TITLE OF INVENTION: FRONT CONTACT SOLAR CELL WITH FORMED EMITTER

APPLN. TYPE	SMALL ENTITY	ISSUE FEE DUE	PUBLICATION FEE DUE	PREV. PAID ISSUE FEE	TOTAL FEE(S) DUE	DATE DUE
nonprovisional	NO	$1740	$300	$0	$2040	06/28/2012

THE APPLICATION IDENTIFIED ABOVE HAS BEEN EXAMINED AND IS ALLOWED FOR ISSUANCE AS A PATENT. PROSECUTION ON THE MERITS IS CLOSED. THIS NOTICE OF ALLOWANCE IS NOT A GRANT OF PATENT RIGHTS. THIS APPLICATION IS SUBJECT TO WITHDRAWAL FROM ISSUE AT THE INITIATIVE OF THE OFFICE OR UPON PETITION BY THE APPLICANT. SEE 37 CFR 1.313 AND MPEP 1308.

THE ISSUE FEE AND PUBLICATION FEE (IF REQUIRED) MUST BE PAID WITHIN THREE MONTHS FROM THE MAILING DATE OF THIS NOTICE OR THIS APPLICATION SHALL BE REGARDED AS ABANDONED. THIS STATUTORY PERIOD CANNOT BE EXTENDED. SEE 35 U.S.C. 151. THE ISSUE FEE DUE INDICATED ABOVE DOES NOT REFLECT A CREDIT FOR ANY PREVIOUSLY PAID ISSUE FEE IN THIS APPLICATION. IF AN ISSUE FEE HAS PREVIOUSLY BEEN PAID IN THIS APPLICATION (AS SHOWN ABOVE), THE RETURN OF PART B OF THIS FORM WILL BE CONSIDERED A REQUEST TO REAPPLY THE PREVIOUSLY PAID ISSUE FEE TOWARD THE ISSUE FEE NOW DUE.

HOW TO REPLY TO THIS NOTICE:

I. Review the SMALL ENTITY status shown above.

If the SMALL ENTITY is shown as YES, verify your current SMALL ENTITY status:

A. If the status is the same, pay the TOTAL FEE(S) DUE shown above.

B. If the status above is to be removed, check box 5b on Part B - Fee(s) Transmittal and pay the PUBLICATION FEE (if required) and twice the amount of the ISSUE FEE shown above, or

If the SMALL ENTITY is shown as NO:

A. Pay TOTAL FEE(S) DUE shown above, or

B. If applicant claimed SMALL ENTITY status before, or is now claiming SMALL ENTITY status, check box 5a on Part B - Fee(s) Transmittal and pay the PUBLICATION FEE (if required) and 1/2 the ISSUE FEE shown above.

II. PART B - FEE(S) TRANSMITTAL, or its equivalent, must be completed and returned to the United States Patent and Trademark Office (USPTO) with your ISSUE FEE and PUBLICATION FEE (if required). If you are charging the fee(s) to your deposit account, section "4b" of Part B - Fee(s) Transmittal should be completed and an extra copy of the form should be submitted. If an equivalent of Part B is filed, a request to reapply a previously paid issue fee must be clearly made, and delays in processing may occur due to the difficulty in recognizing the paper as an equivalent of Part B.

III. All communications regarding this application must give the application number. Please direct all communications prior to issuance to Mail Stop ISSUE FEE unless advised to the contrary.

IMPORTANT REMINDER: Utility patents issuing on applications filed on or after Dec. 12, 1980 may require payment of maintenance fees. It is patentee's responsibility to ensure timely payment of maintenance fees when due.

PTOL-85 (Rev. 02/11)

PART B - FEE(S) TRANSMITTAL

Complete and send this form, together with applicable fee(s), to: Mail **Mail Stop ISSUE FEE**
Commissioner for Patents
P.O. Box 1450
Alexandria, Virginia 22313-1450
or Fax (571)-273-2885

INSTRUCTIONS: This form should be used for transmitting the ISSUE FEE and PUBLICATION FEE (if required). Blocks 1 through 5 should be completed where appropriate. All further correspondence including the Patent, advance orders and notification of maintenance fees will be mailed to the current correspondence address as indicated unless corrected below or directed otherwise in Block 1, by (a) specifying a new correspondence address; and/or (b) indicating a separate "FEE ADDRESS" for maintenance fee notifications.

CURRENT CORRESPONDENCE ADDRESS (Note: Use Block 1 for any change of address)

74254 7590 03/28/2012

Okamoto & Benedicto LLP
P.O. Box 641330
San Jose, CA 95164-1330

Note: A certificate of mailing can only be used for domestic mailings of the Fee(s) Transmittal. This certificate cannot be used for any other accompanying papers. Each additional paper, such as an assignment or formal drawing, must have its own certificate of mailing or transmission.

Certificate of Mailing or Transmission

I hereby certify that this Fee(s) Transmittal is being deposited with the United States Postal Service with sufficient postage for first class mail in an envelope addressed to the Mail Stop ISSUE FEE address above, or being facsimile transmitted to the USPTO (571) 273-2885, on the date indicated below.

(Depositor's name)

(Signature)

(Date)

APPLICATION NO.	FILING DATE	FIRST NAMED INVENTOR	ATTORNEY DOCKET NO.	CONFIRMATION NO.
12/070,742	02/20/2008	Peter John Cousins	10031.004200	2015

TITLE OF INVENTION: FRONT CONTACT SOLAR CELL WITH FORMED EMITTER

APPLN. TYPE	SMALL ENTITY	ISSUE FEE DUE	PUBLICATION FEE DUE	PREV. PAID ISSUE FEE	TOTAL FEE(S) DUE	DATE DUE
nonprovisional	NO	$1740	$300	$0	$2040	06/28/2012

EXAMINER	ART UNIT	CLASS-SUBCLASS
PILLAY, DEVINA	1725	136-255000

1. Change of correspondence address or indication of "Fee Address" (37 CFR 1.363).

❑ Change of correspondence address (or Change of Correspondence Address form PTO/SB/122) attached.

❑ "Fee Address" indication (or "Fee Address" Indication form PTO/SB/47; Rev 03-02 or more recent) attached. **Use of a Customer Number is required.**

2. For printing on the patent front page, list

(1) the names of up to 3 registered patent attorneys or agents OR, alternatively,

(2) the name of a single firm (having as a member a registered attorney or agent) and the names of up to 2 registered patent attorneys or agents. If no name is listed, no name will be printed.

1_____

2_____

3_____

3. ASSIGNEE NAME AND RESIDENCE DATA TO BE PRINTED ON THE PATENT (print or type)

PLEASE NOTE: Unless an assignee is identified below, no assignee data will appear on the patent. If an assignee is identified below, the document has been filed for recordation as set forth in 37 CFR 3.11. Completion of this form is NOT a substitute for filing an assignment.

(A) NAME OF ASSIGNEE (B) RESIDENCE: (CITY and STATE OR COUNTRY)

Please check the appropriate assignee category or categories (will not be printed on the patent) : ❑ Individual ❑ Corporation or other private group entity ❑ Government

4a. The following fee(s) are submitted:

❑ Issue Fee

❑ Publication Fee (No small entity discount permitted)

❑ Advance Order - # of Copies _____

4b. Payment of Fee(s): **(Please first reapply any previously paid issue fee shown above)**

❑ A check is enclosed.

❑ Payment by credit card. Form PTO-2038 is attached.

❑ The Director is hereby authorized to charge the required fee(s), any deficiency, or credit any overpayment, to Deposit Account Number _____ (enclose an extra copy of this form).

5. **Change in Entity Status** (from status indicated above)

❑ a. Applicant claims SMALL ENTITY status. See 37 CFR 1.27.

❑ b. Applicant is no longer claiming SMALL ENTITY status. See 37 CFR 1.27(g)(2).

NOTE: The Issue Fee and Publication Fee (if required) will not be accepted from anyone other than the applicant; a registered attorney or agent; or the assignee or other party in interest as shown by the records of the United States Patent and Trademark Office.

Authorized Signature _____ Date _____

Typed or printed name _____ Registration No. _____

This collection of information is required by 37 CFR 1.311. The information is required to obtain or retain a benefit by the public which is to file (and by the USPTO to process) an application. Confidentiality is governed by 35 U.S.C. 122 and 37 CFR 1.14. This collection is estimated to take 12 minutes to complete, including gathering, preparing, and submitting the completed application form to the USPTO. Time will vary depending upon the individual case. Any comments on the amount of time you require to complete this form and/or suggestions for reducing this burden, should be sent to the Chief Information Officer, U.S. Patent and Trademark Office, U.S. Department of Commerce, P.O. Box 1450, Alexandria, Virginia 22313-1450. DO NOT SEND FEES OR COMPLETED FORMS TO THIS ADDRESS. SEND TO: Commissioner for Patents, P.O. Box 1450, Alexandria, Virginia 22313-1450.

Under the Paperwork Reduction Act of 1995, no persons are required to respond to a collection of information unless it displays a valid OMB control number.

UNITED STATES PATENT AND TRADEMARK OFFICE

UNITED STATES DEPARTMENT OF COMMERCE
United States Patent and Trademark Office
Address: COMMISSIONER FOR PATENTS
P.O. Box 1450
Alexandria, Virginia 22313-1450
www.uspto.gov

APPLICATION NO.	FILING DATE	FIRST NAMED INVENTOR	ATTORNEY DOCKET NO.	CONFIRMATION NO.
12/070,742	02/20/2008	Peter John Cousins	10031.004200	2015

74254 7590 03/28/2012
Okamoto & Benedicto LLP
P.O. Box 641330
San Jose, CA 95164-1330

EXAMINER
PILLAY, DEVINA

ART UNIT	PAPER NUMBER
1725	

DATE MAILED: 03/28/2012

Determination of Patent Term Adjustment under 35 U.S.C. 154 (b)
(application filed on or after May 29, 2000)

The Patent Term Adjustment to date is 690 day(s). If the issue fee is paid on the date that is three months after the mailing date of this notice and the patent issues on the Tuesday before the date that is 28 weeks (six and a half months) after the mailing date of this notice, the Patent Term Adjustment will be 690 day(s).

If a Continued Prosecution Application (CPA) was filed in the above-identified application, the filing date that determines Patent Term Adjustment is the filing date of the most recent CPA.

Applicant will be able to obtain more detailed information by accessing the Patent Application Information Retrieval (PAIR) WEB site (http://pair.uspto.gov).

Any questions regarding the Patent Term Extension or Adjustment determination should be directed to the Office of Patent Legal Administration at (571)-272-7702. Questions relating to issue and publication fee payments should be directed to the Customer Service Center of the Office of Patent Publication at 1-(888)-786-0101 or (571)-272-4200.

Privacy Act Statement

The Privacy Act of 1974 (P.L. 93-579) requires that you be given certain information in connection with your submission of the attached form related to a patent application or patent. Accordingly, pursuant to the requirements of the Act, please be advised that: (1) the general authority for the collection of this information is 35 U.S.C. 2(b)(2); (2) furnishing of the information solicited is voluntary; and (3) the principal purpose for which the information is used by the U.S. Patent and Trademark Office is to process and/or examine your submission related to a patent application or patent. If you do not furnish the requested information, the U.S. Patent and Trademark Office may not be able to process and/or examine your submission, which may result in termination of proceedings or abandonment of the application or expiration of the patent.

The information provided by you in this form will be subject to the following routine uses:

1. The information on this form will be treated confidentially to the extent allowed under the Freedom of Information Act (5 U.S.C. 552) and the Privacy Act (5 U.S.C 552a). Records from this system of records may be disclosed to the Department of Justice to determine whether disclosure of these records is required by the Freedom of Information Act.
2. A record from this system of records may be disclosed, as a routine use, in the course of presenting evidence to a court, magistrate, or administrative tribunal, including disclosures to opposing counsel in the course of settlement negotiations.
3. A record in this system of records may be disclosed, as a routine use, to a Member of Congress submitting a request involving an individual, to whom the record pertains, when the individual has requested assistance from the Member with respect to the subject matter of the record.
4. A record in this system of records may be disclosed, as a routine use, to a contractor of the Agency having need for the information in order to perform a contract. Recipients of information shall be required to comply with the requirements of the Privacy Act of 1974, as amended, pursuant to 5 U.S.C. 552a(m).
5. A record related to an International Application filed under the Patent Cooperation Treaty in this system of records may be disclosed, as a routine use, to the International Bureau of the World Intellectual Property Organization, pursuant to the Patent Cooperation Treaty.
6. A record in this system of records may be disclosed, as a routine use, to another federal agency for purposes of National Security review (35 U.S.C. 181) and for review pursuant to the Atomic Energy Act (42 U.S.C. 218(c)).
7. A record from this system of records may be disclosed, as a routine use, to the Administrator, General Services, or his/her designee, during an inspection of records conducted by GSA as part of that agency's responsibility to recommend improvements in records management practices and programs, under authority of 44 U.S.C. 2904 and 2906. Such disclosure shall be made in accordance with the GSA regulations governing inspection of records for this purpose, and any other relevant (i.e., GSA or Commerce) directive. Such disclosure shall not be used to make determinations about individuals.
8. A record from this system of records may be disclosed, as a routine use, to the public after either publication of the application pursuant to 35 U.S.C. 122(b) or issuance of a patent pursuant to 35 U.S.C. 151. Further, a record may be disclosed, subject to the limitations of 37 CFR 1.14, as a routine use, to the public if the record was filed in an application which became abandoned or in which the proceedings were terminated and which application is referenced by either a published application, an application open to public inspection or an issued patent.
9. A record from this system of records may be disclosed, as a routine use, to a Federal, State, or local law enforcement agency, if the USPTO becomes aware of a violation or potential violation of law or regulation.

Notice of Allowability	Application No.	Applicant(s)	
	12/070,742	COUSINS, PETER JOHN	
	Examiner	Art Unit	
	DEVINA PILLAY	1725	

-- The MAILING DATE of this communication appears on the cover sheet with the correspondence address--

All claims being allowable, PROSECUTION ON THE MERITS IS (OR REMAINS) CLOSED in this application. If not included herewith (or previously mailed), a Notice of Allowance (PTOL-85) or other appropriate communication will be mailed in due course. **THIS NOTICE OF ALLOWABILITY IS NOT A GRANT OF PATENT RIGHTS.** This application is subject to withdrawal from issue at the initiative of the Office or upon petition by the applicant. See 37 CFR 1.313 and MPEP 1308.

1. ☒ This communication is responsive to *07/23/2010*.

2. ☐ An election was made by the applicant in response to a restriction requirement set forth during the interview on _____; the restriction requirement and election have been incorporated into this action.

3. ☒ The allowed claim(s) is/are *1-8 and 17-23*.

4. ☐ Acknowledgment is made of a claim for foreign priority under 35 U.S.C. § 119(a)-(d) or (f).
   a) ☐ All b) ☐ Some* c) ☐ None of the:
      1. ☐ Certified copies of the priority documents have been received.
      2. ☐ Certified copies of the priority documents have been received in Application No. _____ .
      3. ☐ Copies of the certified copies of the priority documents have been received in this national stage application from the International Bureau (PCT Rule 17.2(a)).

   * Certified copies not received: _____.

Applicant has THREE MONTHS FROM THE "MAILING DATE" of this communication to file a reply complying with the requirements noted below. Failure to timely comply will result in ABANDONMENT of this application.
THIS THREE-MONTH PERIOD IS NOT EXTENDABLE.

5. ☐ A SUBSTITUTE OATH OR DECLARATION must be submitted. Note the attached EXAMINER'S AMENDMENT or NOTICE OF INFORMAL PATENT APPLICATION (PTO-152) which gives reason(s) why the oath or declaration is deficient.

6. ☐ CORRECTED DRAWINGS (as "replacement sheets") must be submitted.
   (a) ☐ including changes required by the Notice of Draftsperson's Patent Drawing Review (PTO-948) attached
      1) ☐ hereto or 2) ☐ to Paper No./Mail Date _____.
   (b) ☐ including changes required by the attached Examiner's Amendment / Comment or in the Office action of Paper No./Mail Date _____.

   Identifying indicia such as the application number (see 37 CFR 1.84(c)) should be written on the drawings in the front (not the back) of each sheet. Replacement sheet(s) should be labeled as such in the header according to 37 CFR 1.121(d).

7. ☐ DEPOSIT OF and/or INFORMATION about the deposit of BIOLOGICAL MATERIAL must be submitted. Note the attached Examiner's comment regarding REQUIREMENT FOR THE DEPOSIT OF BIOLOGICAL MATERIAL.

Attachment(s)

1. ☐ Notice of References Cited (PTO-892)
2. ☐ Notice of Draftperson's Patent Drawing Review (PTO-948)
3. ☐ Information Disclosure Statements (PTO/SB/08), Paper No./Mail Date _____
4. ☐ Examiner's Comment Regarding Requirement for Deposit of Biological Material
5. ☐ Notice of Informal Patent Application
6. ☐ Interview Summary (PTO-413), Paper No./Mail Date _____ .
7. ☐ Examiner's Amendment/Comment
8. ☒ Examiner's Statement of Reasons for Allowance
9. ☐ Other _____.

/Basia Ridley/
Supervisory Patent Examiner, Art Unit 1725

REASONS FOR ALLOWANCE

1. Claims 1-8 and 17-20 are allowed.

2. The following is an examiner's statement of reasons for allowance: The prior art of record lacks an oxide layer formed between an emitter and an oppositely doped substrate and a metal contact making an electrical connection to the substrate on the front light incident side of the solar cell.

Any comments considered necessary by applicant must be submitted no later than the payment of the issue fee and, to avoid processing delays, should preferably accompany the issue fee. Such submissions should be clearly labeled "Comments on Statement of Reasons for Allowance."

Conclusion

3. Any inquiry concerning this communication or earlier communications from the examiner should be directed to DEVINA PILLAY whose telephone number is (571)270-1180. The examiner can normally be reached on Monday thru Friday 7:30am -5:00pm (EST). Examiner Fax Number is (571)-270-2180.

If attempts to reach the examiner by telephone are unsuccessful, the examiner's supervisor, Basia Ridley can be reached on 571-272-1453. The fax phone number for the organization where this application or proceeding is assigned is 571-273-8300.

Information regarding the status of an application may be obtained from the Patent Application Information Retrieval (PAIR) system. Status information for published applications may be obtained from either Private PAIR or Public PAIR. Status information for unpublished applications is available through Private PAIR only. For more information about the PAIR system, see http://pair-direct.uspto.gov. Should you have questions on access to the Private PAIR system, contact the Electronic Business Center (EBC) at 866-217-9197 (toll-free). If you would like assistance from a USPTO Customer Service Representative or access to the automated information system, call 800-786-9199 (IN USA OR CANADA) or 571-272-1000.

/D. P./
Examiner, Art Unit 1725

/Basia Ridley/
Supervisory Patent Examiner, Art Unit 1725

Issue Classification	Application/Control No.	Applicant(s)/Patent Under Reexamination
	12070742	COUSINS, PETER JOHN
	Examiner	**Art Unit**
	DEVINA PILLAY	1725

ORIGINAL		INTERNATIONAL CLASSIFICATION										
CLASS	SUBCLASS	CLAIMED					NON-CLAIMED					
136	255	H	0	1	L	31 / 00 (2006.0)						

CROSS REFERENCE(S)

CLASS	SUBCLASS (ONE SUBCLASS PER BLOCK)				
136	256	258			
438	57	69	72	97	98
257	436	461			

☐ Claims renumbered in the same order as presented by applicant ☐ CPA ☐ T.D. ☐ R.1.47

Final	Original	Final	Original	Final	Original	Final	Original	Final	Original	Final	Original	Final	Original	Final	Original
1	1														
2	2														
3	3														
4	4														
5	5														
6	6														
7	7														
8	8														
9	17														
10	18														
11	19														
12	20														

/DEVINA PILLAY/ Examiner.Art Unit 1725 (Assistant Examiner)	03/19/2012 (Date)	**Total Claims Allowed:** 12	
/BASIA RIDLEY/ Supervisory Patent Examiner.Art Unit 1725 (Primary Examiner)	03/26/2012 (Date)	O.G. Print Claim(s) 1	O.G. Print Figure 1

Search Notes	Application/Control No.	Applicant(s)/Patent Under Reexamination
	12070742	COUSINS, PETER JOHN
	Examiner	**Art Unit**
	Devina Pillay	1795

SEARCHED

Class	Subclass	Date	Examiner
136	255	12/8/2009	DP
136	255 256 258	03/19/2012	DP
438	57 69 72 97 98	03/19/2012	DP
257	436 461	03/19/2012	DP

SEARCH NOTES

Search Notes	Date	Examiner
Inventor name search in PALM	12/8/2009	DP
EAST Text Search (See Search History)	12/8/2009	DP
Updated Inventor name search in PALM	5/20/2010	DP
EAST Text Search (See Updated Search History)	03/19/2012	DP

INTERFERENCE SEARCH

Class	Subclass	Date	Examiner
136	255 256 258	03/19/2012	DP
438	57 59 72 97 98	03/19/2012	DP
257	436 461	03/19/2012	DP

EAST Search History

EAST Search History (Prior Art)

Ref #	Hits	Search Query	DBs	Default Operator	Plurals	Time Stamp
S121	1	"12070742"	US-PGPUB; USPAT; USOCR; FPRS; EPO; JPO; DERWENT; IBM_TDB	OR	ON	2012/03/15 16:12
S122	41	polysilicon near2 emitter and (photovoltaic solar near2 (Cell device battery))	US-PGPUB; USPAT; USOCR; FPRS; EPO; JPO; DERWENT; IBM_TDB	OR	OFF	2012/03/15 16:28
S123	18	"4989059"	US-PGPUB; USPAT; USOCR; FPRS; EPO; JPO; DERWENT; IBM_TDB	OR	OFF	2012/03/15 16:34
S125	9	S124 not S122	US-PGPUB; USPAT; USOCR; FPRS; EPO; JPO; DERWENT; IBM_TDB	OR	OFF	2012/03/15 16:35
S124	50	(polysilicon polycrystalline) near2 emitter and (photovoltaic solar near2 (Cell device battery))	US-PGPUB; USPAT; USOCR; FPRS; EPO; JPO; DERWENT; IBM_TDB	OR	OFF	2012/03/15 16:35
S129	128	(polysilicon polycrystalline) with emitter and (photovoltaic solar near2 (Cell device battery)) and (dielectric oxide)	US-PGPUB; USPAT; USOCR; FPRS; EPO; JPO; DERWENT; IBM_TDB	OR	OFF	2012/03/15 16:37
S128	347591	(polysilicon polycrystalline) wiith emitter and (photovoltaic solar near2 (Cell device battery)) and (dielectric oxide)	US-PGPUB; USPAT; USOCR; FPRS; EPO; JPO; DERWENT; IBM_TDB	OR	OFF	2012/03/15 16:37
S127	297	(polysilicon polycrystalline) same	US-PGPUB;	OR	OFF	2012/03/15

		emitter and (photovoltaic solar near2 (Cell device battery)) and (dielectric oxide)	USPAT; USOCR; FPRS; EPO; JPO; DERWENT; IBM_TDB			16:37
S126	343	(polysilicon polycrystalline) same emitter and (photovoltaic solar near2 (Cell device battery))	US-PGPUB; USPAT; USOCR; FPRS; EPO; JPO; DERWENT; IBM_TDB	OR	OFF	2012/03/15 16:37
S130	86	S129 not S124	US-PGPUB; USPAT; USOCR; FPRS; EPO; JPO; DERWENT; IBM_TDB	OR	OFF	2012/03/15 16:38
S131	2	"20090159111"	US-PGPUB; USPAT; USOCR; FPRS; EPO; JPO; DERWENT; IBM_TDB	OR	OFF	2012/03/15 16:43
S132	6	"2008004791"	US-PGPUB; USPAT; USOCR; FPRS; EPO; JPO; DERWENT; IBM_TDB	OR	OFF	2012/03/15 16:46
S133	10	"7468485"	US-PGPUB; USPAT; USOCR; FPRS; EPO; JPO; DERWENT; IBM_TDB	OR	OFF	2012/03/15 16:47
S134	24	("3961997" | "4927770" | "5030295" | "5053083" | "5057439" | "5164019" | "5360990" | "5369291" | "5641362" | "6274402" | "6313395" | "6333457" | "6337283" | "6387726" | "6423568" | "6998288").PN. OR ("7468485").URPN.	US-PGPUB; USPAT; USOCR	OR	OFF	2012/03/15 16:49
S136	1	"20090159111"	US-PGPUB; USPAT; USOCR	OR	OFF	2012/03/15 16:55
S135	14	"5057439"	US-PGPUB; USPAT; USOCR	OR	OFF	2012/03/15 16:55
S137	23	("4090213" | "4131486" | "4133698" | "4232245" | "4255211" | "4315097" | "4316049" | "4341918" | "4365262" | "4367368" | "4385198" | "4427839").PN. OR ("4665277").URPN.	US-PGPUB; USPAT; USOCR	OR	OFF	2012/03/15 16:58

S139	215	S126 not S129	US-PGPUB; USPAT; USOCR; FPRS; EPO; JPO; DERWENT; IBM_TDB	OR	OFF	2012/03/15 17:03
S138	0	S129 not S126	US-PGPUB; USPAT; USOCR; FPRS; EPO; JPO; DERWENT; IBM_TDB	OR	OFF	2012/03/15 17:03
S140	74	emitter and (photovoltaic solar near2 (Cell device battery)) and tunnel near oxide	US-PGPUB; USPAT; USOCR; FPRS; EPO; JPO; DERWENT; IBM_TDB	OR	OFF	2012/03/15 17:04
S142	1	S141 not S140	US-PGPUB; USPAT; USOCR; FPRS; EPO; JPO; DERWENT; IBM_TDB	OR	OFF	2012/03/15 17:10
S141	75	emitter and (photovoltaic solar near2 (Cell device battery)) and tunnel$3 near oxide	US-PGPUB; USPAT; USOCR; FPRS; EPO; JPO; DERWENT; IBM_TDB	OR	OFF	2012/03/15 17:10
S143	222	emitter and (photovoltaic solar near2 (Cell device battery)) and tunnel$3 near5 (oxide barrier)	US-PGPUB; USPAT; USOCR; FPRS; EPO; JPO; DERWENT; IBM_TDB	OR	OFF	2012/03/15 17:11
S144	147	S143 not S141	US-PGPUB; USPAT; USOCR; FPRS; EPO; JPO; DERWENT; IBM_TDB	OR	OFF	2012/03/15 17:12
S145	188	emitter and (photovoltaic solar near2 (Cell device battery)) and tunnel$3 near2 (oxide barrier)	US-PGPUB; USPAT; USOCR; FPRS; EPO; JPO; DERWENT; IBM_TDB	OR	OFF	2012/03/15 17:22
S147	413	(photovoltaic solar near2 (Cell device battery)) and tunnel$3 near2 (oxide barrier) and silicon	US-PGPUB; USPAT; USOCR; FPRS; EPO; JPO;	OR	OFF	2012/03/15 17:27

			DERWENT; IBM_TDB			
S146	488	(photovoltaic solar near2 (Cell device battery)) and tunnel$3 near2 (oxide barrier)	US-PGPUB; USPAT; USOCR; FPRS; EPO; JPO; DERWENT; IBM_TDB	OR	OFF	2012/03/15 17:27
S148	238	S147 not S145	US-PGPUB; USPAT; USOCR; FPRS; EPO; JPO; DERWENT; IBM_TDB	OR	OFF	2012/03/15 17:28
S149	24	("3961997" | "4927770" | "5030295" | "5053083" | "5057439" | "5164019" | "5360990" | "5369291" | "5641362" | "6274402" | "6313395" | "6333457" | "6337283" | "6387726" | "6423568" | "6998288").PN. OR ("7468485").URPN.	US-PGPUB; USPAT; USOCR	OR	OFF	2012/03/15 17:32
S151	10	Sah.in. and emitter	US-PGPUB; USPAT; USOCR	OR	OFF	2012/03/15 17:35
S150	0	Sah.in. and emittter	US-PGPUB; USPAT; USOCR	OR	OFF	2012/03/15 17:35
S152	23	("4090213" | "4131486" | "4133698" | "4232245" | "4255211" | "4315097" | "4316049" | "4341918" | "4365262" | "4367368" | "4385198" | "4427839").PN. OR ("4665277").URPN.	US-PGPUB; USPAT; USOCR	OR	OFF	2012/03/15 17:36
S154	11442	(photovoltaic solar near2 (Cell device battery)) and (passivat$4 near2 oxide dielectric) and silicon	US-PGPUB; USPAT; USOCR; FPRS; EPO; JPO; DERWENT; IBM_TDB	OR	OFF	2012/03/15 17:39
S153	4089	(photovoltaic solar near2 (Cell device battery)) and (passivat$4 near2 oxide dielectric) and silicon and (passivat$4 near2 oxide dielectric) with (reflect$4 metal)	US-PGPUB; USPAT; USOCR; FPRS; EPO; JPO; DERWENT; IBM_TDB	OR	OFF	2012/03/15 17:39
S159	612	(photovoltaic solar near (Cell battery)) and ((passivat$4 near2 oxide) dielectric) and silicon and (passivat$4 near2 oxide dielectric) with (reflect$4 metal) and tunnel$3 and silicon	US-PGPUB; USPAT; USOCR; FPRS; EPO; JPO; DERWENT; IBM_TDB	OR	OFF	2012/03/15 17:40
S158	612	(photovoltaic solar near (Cell battery)) and ((passivat$4 near2 oxide) dielectric) and silicon and	US-PGPUB; USPAT; USOCR;	OR	OFF	2012/03/15 17:40

		(passivat$4 near2 oxide dielectric) with (reflect$4 metal) and tunnel$3	FPRS; EPO; JPO; DERWENT; IBM_TDB			
S157	4063	(photovoltaic solar near (Cell battery)) and ((passivat$4 near2 oxide) dielectric) and silicon and (passivat$4 near2 oxide dielectric) with (reflect$4 metal)	US-PGPUB; USPAT; USOCR; FPRS; EPO; JPO; DERWENT; IBM_TDB	OR	OFF	2012/03/15 17:40
S156	11276	(photovoltaic solar near (Cell battery)) and ((passivat$4 near2 oxide) dielectric) and silicon	US-PGPUB; USPAT; USOCR; FPRS; EPO; JPO; DERWENT; IBM_TDB	OR	OFF	2012/03/15 17:40
S155	11442	(photovoltaic solar near2 (Cell device battery)) and ((passivat$4 near2 oxide) dielectric) and silicon	US-PGPUB; USPAT; USOCR; FPRS; EPO; JPO; DERWENT; IBM_TDB	OR	OFF	2012/03/15 17:40
S161	301	S160 not S148	US-PGPUB; USPAT; USOCR; FPRS; EPO; JPO; DERWENT; IBM_TDB	OR	OFF	2012/03/15 17:41
S160	301	(photovoltaic solar near (Cell battery)) and ((passivat$4 near2 oxide) dielectric) and silicon and (passivat$4 near2 oxide dielectric) with (reflect$4 metal) and tunnel$3 and emitter	US-PGPUB; USPAT; USOCR; FPRS; EPO; JPO; DERWENT; IBM_TDB	OR	OFF	2012/03/15 17:41
S162	8	"5956571"	US-PGPUB; USPAT; USOCR; FPRS; EPO; JPO; DERWENT; IBM_TDB	OR	OFF	2012/03/15 17:57
S163	58	"4200472"	US-PGPUB; USPAT; USOCR; FPRS; EPO; JPO; DERWENT; IBM_TDB	OR	OFF	2012/03/15 17:58
S164	2	"20060130891"	US-PGPUB; USPAT; USOCR; FPRS; EPO; JPO; DERWENT; IBM_TDB	OR	OFF	2012/03/15 17:59
S165	50	Borden.in. and emitter	US-PGPUB;	OR	OFF	2012/03/15

			USPAT; USOCR; FPRS; EPO; JPO; DERWENT; IBM_TDB			18:00
S166	13	"5057439"	USPAT	OR	OFF	2012/03/16 10:33
S168	2	"20090159111"	US-PGPUB; USPAT; USOCR; FPRS; EPO; JPO; DERWENT; IBM_TDB	OR	OFF	2012/03/16 10:36
S167	0	"20090159111"	USPAT	OR	OFF	2012/03/16 10:36
S169	2	"20050268963"	US-PGPUB; USPAT; USOCR; FPRS; EPO; JPO; DERWENT; IBM_TDB	OR	OFF	2012/03/16 10:38
S170	24	("3961997" | "4927770" | "5030295" | "5053083" | "5057439" | "5164019" | "5360990" | "5369291" | "5641362" | "6274402" | "6313395" | "6333457" | "6337283" | "6387726" | "6423568" | "6998288").PN. OR ("7468485").URPN.	US-PGPUB; USPAT; USOCR	OR	OFF	2012/03/16 10:45
S171	14	("4403392" | "4502206").PN. OR ("5057439").URPN.	US-PGPUB; USPAT; USOCR	OR	OFF	2012/03/16 10:47
S173	1	"20090159111"	US-PGPUB; USPAT; USOCR	OR	OFF	2012/03/16 10:49
S172	1	"20060096635"	US-PGPUB; USPAT; USOCR	OR	OFF	2012/03/16 10:49
S174	1	"20050268963"	US-PGPUB; USPAT; USOCR	OR	OFF	2012/03/16 10:54
S175	114	polysilicon near emitter and native near oxide	US-PGPUB; USPAT; USOCR	OR	OFF	2012/03/16 11:12
S176	2	polysilicon near emitter and native near oxide and (photovoltaic and solar near2 (battery cell device))	US-PGPUB; USPAT; USOCR	OR	OFF	2012/03/16 11:13
S177	367	polysilicon near emitter and "SiO.sub.2"	US-PGPUB; USPAT; USOCR	OR	OFF	2012/03/16 11:14
S179	6	Borden.in. and polysilicon near emitter	US-PGPUB; USPAT; USOCR	OR	OFF	2012/03/16 11:15
S178	2	polysilicon near emitter and "SiO.sub.2" and (photovoltaic and solar near2 (battery cell device))	US-PGPUB; USPAT; USOCR	OR	OFF	2012/03/16 11:15

S180	10	polysilicon near emitter and (photovoltaic and solar near2 (battery cell device))	US-PGPUB; USPAT; USOCR	OR	OFF	2012/03/16 11:17
S181	17	(polycyrstalline multicrystalline polysilicon) near2 emitter and (photovoltaic and solar near2 (battery cell device))	US-PGPUB; USPAT; USOCR	OR	OFF	2012/03/16 11:19
S182	0	"2008004791"	US-PGPUB; USPAT; USOCR	OR	OFF	2012/03/16 11:27
S185	6	"2008004791"	US-PGPUB; USPAT; USOCR; FPRS; EPO; JPO; DERWENT; IBM_TDB	OR	OFF	2012/03/16 11:28
S184	0	"2008004791"	US-PGPUB; USPAT; USOCR	OR	OFF	2012/03/16 11:28
S183	2	"20080004791"	US-PGPUB; USPAT; USOCR	OR	OFF	2012/03/16 11:28
L3	552	2 and emitter and (photovoltaic solar near (cell device battery))	US-PGPUB; USPAT; USOCR; FPRS; EPO; JPO; DERWENT; IBM_TDB	OR	OFF	2012/03/19 11:37
L2	7338	438/72.ccls. 438/57.ccls. 438/69.ccls. 438/97.ccls. 438/98.ccls. 257/461.ccls. 257/436.ccls.	US-PGPUB; USPAT; USOCR; FPRS; EPO; JPO; DERWENT; IBM_TDB	OR	OFF	2012/03/19 11:37
L1	3869	438/72.ccls. 438/57.ccls. 438/69.ccls. 438/97.ccls. 438/98.ccls. 257/461.ccls. 257/436.ccls.	USPAT	OR	OFF	2012/03/19 11:37
L5	39	3 and oxide and polysilicon	US-PGPUB; USPAT; USOCR; FPRS; EPO; JPO; DERWENT; IBM_TDB	OR	OFF	2012/03/19 11:38
L4	426	3 and oxide	US-PGPUB; USPAT; USOCR; FPRS; EPO; JPO; DERWENT; IBM_TDB	OR	OFF	2012/03/19 11:38
L6	419	3 and oxide and silicon	US-PGPUB; USPAT; USOCR; FPRS; EPO; JPO;	OR	OFF	2012/03/19 11:45

			DERWENT; IBM_TDB			
L7	237	3 and oxide and (light near incident front) near5 (contact wir$4 connect$4)	US-PGPUB; USPAT; USOCR; FPRS; EPO; JPO; DERWENT; IBM_TDB	OR	OFF	2012/03/19 11:46
L8	12	3 and oxide and (light near incident front) near5 (contact wir$4 connect$4) and tunnel$3 near5 oxide	US-PGPUB; USPAT; USOCR; FPRS; EPO; JPO; DERWENT; IBM_TDB	OR	OFF	2012/03/19 11:53

3/19/2012 12:07:27 PM
C:\Users\dpillay\Documents\EAST\Workspaces\12070742.wsp

Index of Claims	Application/Control No.	Applicant(s)/Patent Under Reexamination
	12070742	COUSINS, PETER JOHN
	Examiner	**Art Unit**
	Devina Pillay	1795

✓	Rejected	-	Cancelled	N	Non-Elected	A	Appeal
=	Allowed	÷	Restricted	I	Interference	O	Objected

☐ Claims renumbered in the same order as presented by applicant ☐ CPA ☐ T.D. ☐ R.1.47

CLAIM		DATE								
Final	Original	10/21/2009	03/19/2012							
	1	÷	=							
	2	÷	=							
	3	÷	=							
	4	÷	=							
	5	÷	=							
	6	÷	=							
	7	÷	=							
	8	÷	=							
	9	÷	-							
	10	÷	-							
	11	÷	-							
	12	÷	-							
	13	÷	-							
	14	÷	-							
	15	÷	-							
	16	÷	-							
	17	÷	=							
	18	÷	=							
	19	÷	=							
	20	÷	=							

PART B - FEE(S) TRANSMITTAL

Complete and send this form, together with applicable fee(s), to: Mail **Mail Stop ISSUE FEE**
Commissioner for Patents
P.O. Box 1450
Alexandria, Virginia 22313-1450
or Fax (571)-273-2885

INSTRUCTIONS: This form should be used for transmitting the ISSUE FEE and PUBLICATION FEE (if required). Blocks 1 through 5 should be completed where appropriate. All further correspondence including the Patent, advance orders and notification of maintenance fees will be mailed to the current correspondence address as indicated unless corrected below or directed otherwise in Block 1, by (a) specifying a new correspondence address; and/or (b) indicating a separate "FEE ADDRESS" for maintenance fee notifications.

CURRENT CORRESPONDENCE ADDRESS (Note: Use Block 1 for any change of address)

74254 7590 03/28/2012
Okamoto & Benedicto LLP
P.O. Box 641330
San Jose, CA 95164-1330

Note: A certificate of mailing can only be used for domestic mailings of the Fee(s) Transmittal. This certificate cannot be used for any other accompanying papers. Each additional paper, such as an assignment or formal drawing, must have its own certificate of mailing or transmission.

Certificate of Mailing or Transmission
I hereby certify that this Fee(s) Transmittal is being deposited with the United States Postal Service with sufficient postage for first class mail in an envelope addressed to the Mail Stop ISSUE FEE address above, or being facsimile transmitted to the USPTO (571) 273-2885, on the date indicated below.

(Depositor's name)
(Signature)
(Date)

APPLICATION NO.	FILING DATE	FIRST NAMED INVENTOR	ATTORNEY DOCKET NO.	CONFIRMATION NO.
12/070,742	02/20/2008	Peter John Cousins	10031.004200	2015

TITLE OF INVENTION: FRONT CONTACT SOLAR CELL WITH FORMED EMITTER

APPLN. TYPE	SMALL ENTITY	ISSUE FEE DUE	PUBLICATION FEE DUE	PREV. PAID ISSUE FEE	TOTAL FEE(S) DUE	DATE DUE
nonprovisional	NO	$1740	$300	$0	$2040	06/28/2012

EXAMINER	ART UNIT	CLASS-SUBCLASS
PILLAY, DEVINA	1725	136-255000

1. Change of correspondence address or indication of "Fee Address" (37 CFR 1.363).
☐ Change of correspondence address (or Change of Correspondence Address form PTO/SB/122) attached.
☐ "Fee Address" indication (or "Fee Address" Indication form PTO/SB/47; Rev 03-02 or more recent) attached. **Use of a Customer Number is required.**

2. For printing on the patent front page, list
(1) the names of up to 3 registered patent attorneys or agents OR, alternatively,
(2) the name of a single firm (having as a member a registered attorney or agent) and the names of up to 2 registered patent attorneys or agents. If no name is listed, no name will be printed.

1 Okamoto & Benedicto LLP
2
3

3. ASSIGNEE NAME AND RESIDENCE DATA TO BE PRINTED ON THE PATENT (print or type)

PLEASE NOTE: Unless an assignee is identified below, no assignee data will appear on the patent. If an assignee is identified below, the document has been filed for recordation as set forth in 37 CFR 3.11. Completion of this form is NOT a substitute for filing an assignment.

(A) NAME OF ASSIGNEE: SunPower Corporation

(B) RESIDENCE: (CITY and STATE OR COUNTRY): San Jose, California

Please check the appropriate assignee category or categories (will not be printed on the patent): ☐ Individual ☒ Corporation or other private group entity ☐ Government

4a. The following fee(s) are submitted:
☒ Issue Fee
☒ Publication Fee (No small entity discount permitted)
☐ Advance Order - # of Copies _____

4b. Payment of Fee(s): **(Please first reapply any previously paid issue fee shown above)**
☐ A check is enclosed.
☒ Payment by credit card. Form PTO-2038 is attached.
☒ The Director is hereby authorized to charge the required fee(s), any deficiency, or credit any overpayment, to Deposit Account Number 50-2427 (enclose an extra copy of this form).

5. **Change in Entity Status** (from status indicated above)
☐ a. Applicant claims SMALL ENTITY status. See 37 CFR 1.27.
☐ b. Applicant is no longer claiming SMALL ENTITY status. See 37 CFR 1.27(g)(2).

NOTE: The Issue Fee and Publication Fee (if required) will not be accepted from anyone other than the applicant; a registered attorney or agent; or the assignee or other party in interest as shown by the records of the United States Patent and Trademark Office.

Authorized Signature /Patrick D. Benedicto, Reg. No. 40,909/ Date 06/13/2012

Typed or printed name PATRICK D. BENEDICTO Registration No. 40,909

This collection of information is required by 37 CFR 1.311. The information is required to obtain or retain a benefit by the public which is to file (and by the USPTO to process) an application. Confidentiality is governed by 35 U.S.C. 122 and 37 CFR 1.14. This collection is estimated to take 12 minutes to complete, including gathering, preparing, and submitting the completed application form to the USPTO. Time will vary depending upon the individual case. Any comments on the amount of time you require to complete this form and/or suggestions for reducing this burden, should be sent to the Chief Information Officer, U.S. Patent and Trademark Office, U.S. Department of Commerce, P.O. Box 1450, Alexandria, Virginia 22313-1450. DO NOT SEND FEES OR COMPLETED FORMS TO THIS ADDRESS. SEND TO: Commissioner for Patents, P.O. Box 1450, Alexandria, Virginia 22313-1450.
Under the Paperwork Reduction Act of 1995, no persons are required to respond to a collection of information unless it displays a valid OMB control number.

IN THE UNITED STATES PATENT AND TRADEMARK OFFICE

In re Application of:

Peter John Cousins

Application No.: 12/070,742 Examiner: Pillay, Devina

Filing Date: February 20, 2008 Art Unit: 1725

Title: FRONT CONTACT SOLAR CELL WITH FORMED EMITTER

COMMENTS ON STATEMENT OF REASONS FOR ALLOWANCE

Applicant respectfully submits that the Examiner's statement of reasons for allowance does not necessarily provide all the reasons why the present claims are allowable. Applicant respectfully submits that the present claims are allowable because each of the claims recites a combination of features that is not taught or suggested by the prior art.

Please charge any additional fees, including any fees for extension of time, or credit overpayment to Deposit Account No. 50-2427.

Respectfully submitted,
Peter John Cousins

Dated: June 13, 2012

/Patrick Benedicto/
Patrick D. Benedicto, Reg. No. 40,909
Okamoto & Benedicto LLP
P.O. Box 641330
San Jose, CA 95164
Tel.: (408)436-2110
Fax.: (408)436-2114

Electronic Patent Application Fee Transmittal

Application Number:	12070742
Filing Date:	20-Feb-2008
Title of Invention:	FRONT CONTACT SOLAR CELL WITH FORMED EMITTER
First Named Inventor/Applicant Name:	Peter John Cousins
Filer:	Patrick D. Benedicto/jina mangaoang
Attorney Docket Number:	10031.004200

Filed as Large Entity

Utility under 35 USC 111(a) Filing Fees

Description	Fee Code	Quantity	Amount	Sub-Total in USD($)
Basic Filing:				
Pages:				
Claims:				
Miscellaneous-Filing:				
Petition:				
Patent-Appeals-and-Interference:				
Post-Allowance-and-Post-Issuance:				
Utility Appl issue fee	1501	1	1740	1740
Publ. Fee- early, voluntary, or normal	1504	1	300	300

Description	Fee Code	Quantity	Amount	Sub-Total in USD($)
Extension-of-Time:				
Miscellaneous:				
			Total in USD ($)	**2040**

Electronic Acknowledgement Receipt

EFS ID:	13004139
Application Number:	12070742
International Application Number:	
Confirmation Number:	2015
Title of Invention:	FRONT CONTACT SOLAR CELL WITH FORMED EMITTER
First Named Inventor/Applicant Name:	Peter John Cousins
Customer Number:	74254
Filer:	Patrick D. Benedicto/jina mangaoang
Filer Authorized By:	Patrick D. Benedicto
Attorney Docket Number:	10031.004200
Receipt Date:	13-JUN-2012
Filing Date:	20-FEB-2008
Time Stamp:	15:51:06
Application Type:	Utility under 35 USC 111(a)

Payment information:

Submitted with Payment	yes
Payment Type	Credit Card
Payment was successfully received in RAM	$2040
RAM confirmation Number	14163
Deposit Account	
Authorized User	

File Listing:

Document Number	Document Description	File Name	File Size(Bytes)/ Message Digest	Multi Part /.zip	Pages (if appl.)

1	Issue Fee Payment (PTO-85B)	S0123_IssueFeePTOL-85.pdf	187195 4dd294a58fa4e1247a3a2008bdd1f65404a63eaf	no	1
Warnings:					
Information:					
2	Miscellaneous Incoming Letter	S0123_CommentsOnStatementOfReasonsForAllowance.pdf	55801 76f1f0825ff0fb7da69c9a146747e60ee7d5352e	no	1
Warnings:					
Information:					
3	Fee Worksheet (SB06)	fee-info.pdf	31992 537035a862cd95b21a75afc1fcda47aef1346d4a	no	2
Warnings:					
Information:					
		Total Files Size (in bytes):	274988		

This Acknowledgement Receipt evidences receipt on the noted date by the USPTO of the indicated documents, characterized by the applicant, and including page counts, where applicable. It serves as evidence of receipt similar to a Post Card, as described in MPEP 503.

<u>New Applications Under 35 U.S.C. 111</u>
If a new application is being filed and the application includes the necessary components for a filing date (see 37 CFR 1.53(b)-(d) and MPEP 506), a Filing Receipt (37 CFR 1.54) will be issued in due course and the date shown on this Acknowledgement Receipt will establish the filing date of the application.

<u>National Stage of an International Application under 35 U.S.C. 371</u>
If a timely submission to enter the national stage of an international application is compliant with the conditions of 35 U.S.C. 371 and other applicable requirements a Form PCT/DO/EO/903 indicating acceptance of the application as a national stage submission under 35 U.S.C. 371 will be issued in addition to the Filing Receipt, in due course.

<u>New International Application Filed with the USPTO as a Receiving Office</u>
If a new international application is being filed and the international application includes the necessary components for an international filing date (see PCT Article 11 and MPEP 1810), a Notification of the International Application Number and of the International Filing Date (Form PCT/RO/105) will be issued in due course, subject to prescriptions concerning national security, and the date shown on this Acknowledgement Receipt will establish the international filing date of the application.

UNITED STATES PATENT AND TRADEMARK OFFICE

UNITED STATES DEPARTMENT OF COMMERCE
United States Patent and Trademark Office
Address: COMMISSIONER FOR PATENTS
P.O. Box 1450
Alexandria, Virginia 22313-1450
www.uspto.gov

APPLICATION NO.	ISSUE DATE	PATENT NO.	ATTORNEY DOCKET NO.	CONFIRMATION NO.
12/070,742	07/17/2012	8222516	10031.004200	2015

74254 7590 06/27/2012
Okamoto & Benedicto LLP
P.O. Box 641330
San Jose, CA 95164-1330

ISSUE NOTIFICATION

The projected patent number and issue date are specified above.

Determination of Patent Term Adjustment under 35 U.S.C. 154 (b)
(application filed on or after May 29, 2000)

The Patent Term Adjustment is 690 day(s). Any patent to issue from the above-identified application will include an indication of the adjustment on the front page.

If a Continued Prosecution Application (CPA) was filed in the above-identified application, the filing date that determines Patent Term Adjustment is the filing date of the most recent CPA.

Applicant will be able to obtain more detailed information by accessing the Patent Application Information Retrieval (PAIR) WEB site (http://pair.uspto.gov).

Any questions regarding the Patent Term Extension or Adjustment determination should be directed to the Office of Patent Legal Administration at (571)-272-7702. Questions relating to issue and publication fee payments should be directed to the Application Assistance Unit (AAU) of the Office of Data Management (ODM) at (571)-272-4200.

APPLICANT(s) (Please see PAIR WEB site http://pair.uspto.gov for additional applicants):

Peter John Cousins, Menlo Park, CA;

PTO/AIA/122 (08-12)
Approved for use through 03/31/2021. OMB 0651-0035
U.S. Patent and Trademark Office; U.S. DEPARTMENT OF COMMERCE
Under the Paperwork Reduction Act of 1995, no persons are required to respond to a collection of information unless it displays a valid OMB control number.

CHANGE OF CORRESPONDENCE ADDRESS
Application

Address to:
Commissioner for Patents
P.O. Box 1450
Alexandria, VA 22313-1450

Application Number	12/070,742
Filing Date	2008-02-20
First Named Inventor	Cousins, Peter J.
Art Unit	1794
Examiner Name	Pillay, Devina
Attorney Docket Number	S0123US

Please change the Correspondence Address for the above-identified patent application to:

[■] The address associated with Customer Number: 144187

OR

[ ] Firm or Individual Name

Address

City	State	Zip

Country

Telephone	Email

This form cannot be used to change the data associated with a Customer Number. To change the data associated with an existing Customer Number use "Request for Customer Number Data Change" (PTO/SB/124).

I am the:

[ ] Applicant

[■] Attorney or agent of record. Registration Number 72,360.

[ ] Registered practitioner named in the application transmittal papers who acts in a representative capacity under 37 CFR 1.34. See 37 CFR 1.33(a)(1). Registration Number _____.

Signature /Jackson Ho/

Typed or Printed Name Jackson Ho

Date 08-16-2022	Telephone 408-331-1671

NOTE: This form must be signed in accordance with 37 CFR 1.33. See 37 CFR 1.4(d) for signature requirements and certifications.
Submit multiple forms if more than one signature is required, see below*.

[ ] *Total of _____ forms are submitted.

This collection of information is required by 37 CFR 1.33. The information is required to obtain or retain a benefit by the public which is to file (and by the USPTO to process) an application. Confidentiality is governed by 35 U.S.C. 122 and 37 CFR 1.11 and 1.14. This collection is estimated to take 3 minutes to complete, including gathering, preparing, and submitting the completed application form to the USPTO. Time will vary depending upon the individual case. Any comments on the amount of time you require to complete this form and/or suggestions for reducing this burden, should be sent to the Chief Information Officer, U.S. Patent and Trademark Office, U.S. Department of Commerce, P.O. Box 1450, Alexandria, VA 22313-1450. DO NOT SEND FEES OR COMPLETED FORMS TO THIS ADDRESS. **SEND TO: Commissioner for Patents, P.O. Box 1450, Alexandria, VA 22313-1450.**

If you need assistance in completing the form, call 1-800-PTO-9199 and select option 2.

Privacy Act Statement

The **Privacy Act of 1974 (P.L. 93-579)** requires that you be given certain information in connection with your submission of the attached form related to a patent application or patent. Accordingly, pursuant to the requirements of the Act, please be advised that: (1) the general authority for the collection of this information is 35 U.S.C. 2(b)(2); (2) furnishing of the information solicited is voluntary; and (3) the principal purpose for which the information is used by the U.S. Patent and Trademark Office is to process and/or examine your submission related to a patent application or patent. If you do not furnish the requested information, the U.S. Patent and Trademark Office may not be able to process and/or examine your submission, which may result in termination of proceedings or abandonment of the application or expiration of the patent.

The information provided by you in this form will be subject to the following routine uses:

1. The information on this form will be treated confidentially to the extent allowed under the Freedom of Information Act (5 U.S.C. 552) and the Privacy Act (5 U.S.C 552a). Records from this system of records may be disclosed to the Department of Justice to determine whether disclosure of these records is required by the Freedom of Information Act.
2. A record from this system of records may be disclosed, as a routine use, in the course of presenting evidence to a court, magistrate, or administrative tribunal, including disclosures to opposing counsel in the course of settlement negotiations.
3. A record in this system of records may be disclosed, as a routine use, to a Member of Congress submitting a request involving an individual, to whom the record pertains, when the individual has requested assistance from the Member with respect to the subject matter of the record.
4. A record in this system of records may be disclosed, as a routine use, to a contractor of the Agency having need for the information in order to perform a contract. Recipients of information shall be required to comply with the requirements of the Privacy Act of 1974, as amended, pursuant to 5 U.S.C. 552a(m).
5. A record related to an International Application filed under the Patent Cooperation Treaty in this system of records may be disclosed, as a routine use, to the International Bureau of the World Intellectual Property Organization, pursuant to the Patent Cooperation Treaty.
6. A record in this system of records may be disclosed, as a routine use, to another federal agency for purposes of National Security review (35 U.S.C. 181) and for review pursuant to the Atomic Energy Act (42 U.S.C. 218(c)).
7. A record from this system of records may be disclosed, as a routine use, to the Administrator, General Services, or his/her designee, during an inspection of records conducted by GSA as part of that agency's responsibility to recommend improvements in records management practices and programs, under authority of 44 U.S.C. 2904 and 2906. Such disclosure shall be made in accordance with the GSA regulations governing inspection of records for this purpose, and any other relevant (*i.e.*, GSA or Commerce) directive. Such disclosure shall not be used to make determinations about individuals.
8. A record from this system of records may be disclosed, as a routine use, to the public after either publication of the application pursuant to 35 U.S.C. 122(b) or issuance of a patent pursuant to 35 U.S.C. 151. Further, a record may be disclosed, subject to the limitations of 37 CFR 1.14, as a routine use, to the public if the record was filed in an application which became abandoned or in which the proceedings were terminated and which application is referenced by either a published application, an application open to public inspection or an issued patent.
9. A record from this system of records may be disclosed, as a routine use, to a Federal, State, or local law enforcement agency, if the USPTO becomes aware of a violation or potential violation of law or regulation.

Electronic Acknowledgement Receipt

EFS ID:	46423604
Application Number:	12070742
International Application Number:	
Confirmation Number:	2015
Title of Invention:	FRONT CONTACT SOLAR CELL WITH FORMED EMITTER
First Named Inventor/Applicant Name:	Peter John Cousins
Customer Number:	74254
Filer:	Jackson Ho/Julie Fosnaugh
Filer Authorized By:	Jackson Ho
Attorney Docket Number:	10031.004200
Receipt Date:	16-AUG-2022
Filing Date:	20-FEB-2008
Time Stamp:	17:45:14
Application Type:	Utility under 35 USC 111(a)

Payment information:

Submitted with Payment	no

File Listing:

Document Number	Document Description	File Name	File Size(Bytes)/ Message Digest	Multi Part /.zip	Pages (if appl.)
1	Change of Address	S0123US_ChangeCorresAddress_EF.pdf	233526 59318a367cdb504bab5a2fc5f6d872c58c89fd00	no	2

Warnings:

Information:					
2	Assignee showing of ownership per 37 CFR 3.73	S0123US_AssnStmt373c_EF.pdf	553151 cf6f613ff486bbe1eaadc299d19db001f9df17c0	no	4
Warnings:					
Information:					
			Total Files Size (in bytes):	786677	

This Acknowledgement Receipt evidences receipt on the noted date by the USPTO of the indicated documents, characterized by the applicant, and including page counts, where applicable. It serves as evidence of receipt similar to a Post Card, as described in MPEP 503.

New Applications Under 35 U.S.C. 111
If a new application is being filed and the application includes the necessary components for a filing date (see 37 CFR 1.53(b)-(d) and MPEP 506), a Filing Receipt (37 CFR 1.54) will be issued in due course and the date shown on this Acknowledgement Receipt will establish the filing date of the application.
National Stage of an International Application under 35 U.S.C. 371
If a timely submission to enter the national stage of an international application is compliant with the conditions of 35 U.S.C. 371 and other applicable requirements a Form PCT/DO/EO/903 indicating acceptance of the application as a national stage submission under 35 U.S.C. 371 will be issued in addition to the Filing Receipt, in due course.
New International Application Filed with the USPTO as a Receiving Office
If a new international application is being filed and the international application includes the necessary components for an international filing date (see PCT Article 11 and MPEP 1810), a Notification of the International Application Number and of the International Filing Date (Form PCT/RO/105) will be issued in due course, subject to prescriptions concerning national security, and the date shown on this Acknowledgement Receipt will establish the international filing date of the application.

PTO/AIA/96 (08-12)
Approved for use through 11/30/2020. OMB 0651-0031
U.S. Patent and Trademark Office; U.S. DEPARTMENT OF COMMERCE
Under the Paperwork Reduction Act of 1995, no persons are required to respond to a collection of information unless it displays a valid OMB control number.

STATEMENT UNDER 37 CFR 3.73(c)

Applicant/Patent Owner: SUNPOWER CORPORATION

Application No./Patent No.: 12/070,742 Filed/Issue Date: 02-20-2008

Titled: FRONT CONTACT SOLAR CELL WITH FORMED EMITTER

SUNPOWER CORPORATION, a corporation

(Name of Assignee) (Type of Assignee, e.g., corporation, partnership, university, government agency, etc.)

states that, for the patent application/patent identified above, it is (choose **one** of options 1, 2, 3 or 4 below):

1. ☑ The assignee of the entire right, title, and interest.

2. ☐ An assignee of less than the entire right, title, and interest (check applicable box):

☐ The extent (by percentage) of its ownership interest is _____%. Additional Statement(s) by the owners holding the balance of the interest must be submitted to account for 100% of the ownership interest.

☐ There are unspecified percentages of ownership. The other parties, including inventors, who together own the entire right, title and interest are:

Additional Statement(s) by the owner(s) holding the balance of the interest must be submitted to account for the entire right, title, and interest.

3. ☐ The assignee of an undivided interest in the entirety (a complete assignment from one of the joint inventors was made). The other parties, including inventors, who together own the entire right, title, and interest are:

Additional Statement(s) by the owner(s) holding the balance of the interest must be submitted to account for the entire right, title, and interest.

4. ☐ The recipient, via a court proceeding or the like (*e.g.*, bankruptcy, probate), of an undivided interest in the entirety (a complete transfer of ownership interest was made). The certified document(s) showing the transfer is attached.

The interest identified in option 1, 2 or 3 above (not option 4) is evidenced by either (choose **one** of options A or B below):

A. ☐ An assignment from the inventor(s) of the patent application/patent identified above. The assignment was recorded in the United States Patent and Trademark Office at Reel _____, Frame _____, or for which a copy thereof is attached.

B. ☑ A chain of title from the inventor(s), of the patent application/patent identified above, to the current assignee as follows:

1. From: Peter John Cousins To: SUNPOWER CORPORATION

The document was recorded in the United States Patent and Trademark Office at

Reel 020595, Frame 0792, or for which a copy thereof is attached.

2. From: _____ To: _____

The document was recorded in the United States Patent and Trademark Office at

Reel _____, Frame _____, or for which a copy thereof is attached.

This collection of information is required by 37 CFR 3.73(b). The information is required to obtain or retain a benefit by the public which is to file (and by the USPTO to process) an application. Confidentiality is governed by 35 U.S.C. 122 and 37 CFR 1.11 and 1.14. This collection is estimated to take 12 minutes to complete, including gathering, preparing, and submitting the completed application form to the USPTO. Time will vary depending upon the individual case. Any comments on the amount of time you require to complete this form and/or suggestions for reducing this burden, should be sent to the Chief Information Officer, U.S. Patent and Trademark Office, U.S. Department of Commerce, P.O. Box 1450, Alexandria, VA 22313-1450. DO NOT SEND FEES OR COMPLETED FORMS TO THIS ADDRESS. **SEND TO: Commissioner for Patents, P.O. Box 1450, Alexandria, VA 22313-1450.**

If you need assistance in completing the form, call 1-800-PTO-9199 and select option 2.

Under the Paperwork Reduction Act of 1995, no persons are required to respond to a collection of information unless it displays a valid OMB control number.

STATEMENT UNDER 37 CFR 3.73(c)

3. From: _____ To: _____

The document was recorded in the United States Patent and Trademark Office at

Reel _____, Frame _____, or for which a copy thereof is attached.

4. From: _____ To: _____

The document was recorded in the United States Patent and Trademark Office at

Reel _____, Frame _____, or for which a copy thereof is attached.

5. From: _____ To: _____

The document was recorded in the United States Patent and Trademark Office at

Reel _____, Frame _____, or for which a copy thereof is attached.

6. From: _____ To: _____

The document was recorded in the United States Patent and Trademark Office at

Reel _____, Frame _____, or for which a copy thereof is attached.

☐ Additional documents in the chain of title are listed on a supplemental sheet(s).

☑ As required by 37 CFR 3.73(c)(1)(i), the documentary evidence of the chain of title from the original owner to the assignee was, or concurrently is being, submitted for recordation pursuant to 37 CFR 3.11.

[NOTE: A separate copy (i.e., a true copy of the original assignment document(s)) must be submitted to Assignment Division in accordance with 37 CFR Part 3, to record the assignment in the records of the USPTO. See MPEP 302.08]

The undersigned (whose title is supplied below) is authorized to act on behalf of the assignee.

/Jackson Ho/	08-16-2022
Signature	Date
Jackson Ho	72,360
Printed or Typed Name	Title or Registration Number

Privacy Act Statement

The **Privacy Act of 1974 (P.L. 93-579)** requires that you be given certain information in connection with your submission of the attached form related to a patent application or patent. Accordingly, pursuant to the requirements of the Act, please be advised that: (1) the general authority for the collection of this information is 35 U.S.C. 2(b)(2); (2) furnishing of the information solicited is voluntary; and (3) the principal purpose for which the information is used by the U.S. Patent and Trademark Office is to process and/or examine your submission related to a patent application or patent. If you do not furnish the requested information, the U.S. Patent and Trademark Office may not be able to process and/or examine your submission, which may result in termination of proceedings or abandonment of the application or expiration of the patent.

The information provided by you in this form will be subject to the following routine uses:

1. The information on this form will be treated confidentially to the extent allowed under the Freedom of Information Act (5 U.S.C. 552) and the Privacy Act (5 U.S.C 552a). Records from this system of records may be disclosed to the Department of Justice to determine whether disclosure of these records is required by the Freedom of Information Act.
2. A record from this system of records may be disclosed, as a routine use, in the course of presenting evidence to a court, magistrate, or administrative tribunal, including disclosures to opposing counsel in the course of settlement negotiations.
3. A record in this system of records may be disclosed, as a routine use, to a Member of Congress submitting a request involving an individual, to whom the record pertains, when the individual has requested assistance from the Member with respect to the subject matter of the record.
4. A record in this system of records may be disclosed, as a routine use, to a contractor of the Agency having need for the information in order to perform a contract. Recipients of information shall be required to comply with the requirements of the Privacy Act of 1974, as amended, pursuant to 5 U.S.C. 552a(m).
5. A record related to an International Application filed under the Patent Cooperation Treaty in this system of records may be disclosed, as a routine use, to the International Bureau of the World Intellectual Property Organization, pursuant to the Patent Cooperation Treaty.
6. A record in this system of records may be disclosed, as a routine use, to another federal agency for purposes of National Security review (35 U.S.C. 181) and for review pursuant to the Atomic Energy Act (42 U.S.C. 218(c)).
7. A record from this system of records may be disclosed, as a routine use, to the Administrator, General Services, or his/her designee, during an inspection of records conducted by GSA as part of that agency's responsibility to recommend improvements in records management practices and programs, under authority of 44 U.S.C. 2904 and 2906. Such disclosure shall be made in accordance with the GSA regulations governing inspection of records for this purpose, and any other relevant (*i.e.*, GSA or Commerce) directive. Such disclosure shall not be used to make determinations about individuals.
8. A record from this system of records may be disclosed, as a routine use, to the public after either publication of the application pursuant to 35 U.S.C. 122(b) or issuance of a patent pursuant to 35 U.S.C. 151. Further, a record may be disclosed, subject to the limitations of 37 CFR 1.14, as a routine use, to the public if the record was filed in an application which became abandoned or in which the proceedings were terminated and which application is referenced by either a published application, an application open to public inspection or an issued patent.
9. A record from this system of records may be disclosed, as a routine use, to a Federal, State, or local law enforcement agency, if the USPTO becomes aware of a violation or potential violation of law or regulation.

PTO/AIA/80 (07-12)
Approved for use through 11/30/2014. OMB 0651-0035
U.S. Patent and Trademark Office; U.S. DEPARTMENT OF COMMERCE
Under the Paperwork Reduction Act of 1995, no persons are required to respond to a collection of information unless it displays a valid OMB control number.

POWER OF ATTORNEY TO PROSECUTE APPLICATIONS BEFORE THE USPTO

I hereby revoke all previous powers of attorney given in the application identified in the attached statement under 37 CFR 3.73(c).

I hereby appoint:

■ Practitioners associated with Customer Number: 144187

OR

☐ Practitioner(s) named below (if more than ten patent practitioners are to be named, then a customer number must be used):

Name	Registration Number	Name	Registration Number

As attorney(s) or agent(s) to represent the undersigned before the United States Patent and Trademark Office (USPTO) in connection with any and all patent applications assigned only to the undersigned according to the USPTO assignment records or assignments documents attached to this form in accordance with 37 CFR 3.73(c).

Please change the correspondence address for the application identified in the attached statement under 37 CFR 3.73(c) to:

■ The address associated with Customer Number: 144187

OR

☐	Firm or Individual Name			
	Address			
	City		State	Zip
	Country			
	Telephone		Email	

Assignee Name and Address: SunPower Corporation
51 Rio Robles
San Jose, CA 95134

A copy of this form, together with a statement under 37 CFR 3.73(c) (Form PTO/AIA/96 or equivalent) is required to be Filed in each application in which this form is used. The statement under 37 CFR 3.73(c) may be completed by one of The practitioners appointed in this form, and must identify the application in which this Power of Attorney is to be filed.

SIGNATURE of Assignee of Record

The individual whose signature and title is supplied below is authorized to act on behalf of the assignee

Signature		Date	27-Feb-2017
Name	Marc Robinson	Telephone	512.735.5911
Title	Senior IP Counsel		

This collection of information is required by 37 CFR 1.31, 1.32 and 1.33. The information is required to obtain or retain a benefit by the public which is to file (and by the USPTO to process) an application. Confidentiality is governed by 35 U.S.C. 122 and 37 CFR 1.11 and 1.14. This collection is estimated to take 3 minutes to complete, including gathering, preparing, and submitting the completed application form to the USPTO. Time will vary depending upon the individual case. Any comments on the amount of time you require to complete this form and/or suggestions for reducing this burden, should be sent to the Chief Information Officer, U.S. Patent and Trademark Office, U.S. Department of Commerce, P.O. Box 1450, Alexandria, VA 22313-1450. DO NOT SEND FEES OR COMPLETED FORMS TO THIS ADDRESS. **SEND TO: Commissioner for Patents, P.O. Box 1450, Alexandria, VA 22313-1450.**

If you need assistance in completing the form, call 1-800-PTO-9199 and select option 2.

UNITED STATES PATENT AND TRADEMARK OFFICE

UNITED STATES DEPARTMENT OF COMMERCE
United States Patent and Trademark Office
Address: COMMISSIONER FOR PATENTS
P.O. Box 1450
Alexandria, Virginia 22313-1450
www.uspto.gov

APPLICATION NUMBER	FILING OR 371(C) DATE	FIRST NAMED APPLICANT	ATTY. DOCKET NO./TITLE
12/070,742	02/20/2008	Peter John Cousins	S0123US

CONFIRMATION NO. 2015

POA ACCEPTANCE LETTER

144187
Schmidt Patent Law, Inc.
2635 N. First Street
Suite 150
San Jose, CA 95134-2000

OC000000135946132

Date Mailed: 08/22/2022

NOTICE OF ACCEPTANCE OF POWER OF ATTORNEY

This is in response to the Power of Attorney filed 08/16/2022.

The Power of Attorney in this application is accepted. Correspondence in this application will be mailed to the above address as provided by 37 CFR 1.33.

Questions about the contents of this notice and the requirements it sets forth should be directed to the Office of Data Management, Application Assistance Unit, at **(571) 272-4000** or **(571) 272-4200** or **1-888-786-0101**.

/nrhayden/

UNITED STATES PATENT AND TRADEMARK OFFICE

UNITED STATES DEPARTMENT OF COMMERCE
United States Patent and Trademark Office
Address: COMMISSIONER FOR PATENTS
P.O. Box 1450
Alexandria, Virginia 22313-1450
www.uspto.gov

APPLICATION NUMBER	FILING OR 371(C) DATE	FIRST NAMED APPLICANT	ATTY. DOCKET NO./TITLE
12/070,742	02/20/2008	Peter John Cousins	S0123US

CONFIRMATION NO. 2015

POWER OF ATTORNEY NOTICE

144187
Schmidt Patent Law, Inc.
2635 N. First Street
Suite 150
San Jose, CA 95134-2000

OC000000135946072

Date Mailed: 08/22/2022

NOTICE REGARDING CHANGE OF POWER OF ATTORNEY

This is in response to the Power of Attorney filed 08/16/2022.

- The Power of Attorney to you in this application has been revoked by the assignee who has intervened as provided by 37 CFR 3.71. Future correspondence will be mailed to the new address of record(37 CFR 1.33).

Questions about the contents of this notice and the requirements it sets forth should be directed to the Office of Data Management, Application Assistance Unit, at **(571) 272-4000** or **(571) 272-4200** or **1-888-786-0101**.

/nrhayden/