Doc Code: FAI.REQ
Document Description: Request First Action Interview

PTO/SB/413C (05-11)
Approved for use through 07/31/2012. OMB 0651-0031
U.S. Patent and Trademark Office; U. S. DEPARTMENT OF COMMERCE
Under the Paperwork Reduction Act of 1995, no persons are required to respond to a collection of information unless it displays a valid OMB control number.

REQUEST FOR FIRST ACTION INTERVIEW (FULL PILOT PROGRAM)

Attorney Docket Number: 10031.004210	Application Number (if known):	Filing date: 06/13/2012
First Named Inventor: Peter John Cousins	Title: FRONT CONTACT SOLAR CELL WITH FORMED EMITTER	

APPLICANT HEREBY REQUESTS A FIRST ACTION INTERVIEW IN THE ABOVE-IDENTIFIED APPLICATION. See Instruction Sheet on page 2.

1. The application must contain three (3) or fewer independent claims and twenty (20) or fewer total claims.

2. The application must not contain any multiple dependent claims.

3. By filing this request:

   Applicant is agreeing to make an election without traverse if the Office determines that the claims are not obviously directed to a single invention; and

   Applicant is agreeing not to request for a refund of the search fee and any excess claims fee paid in the application after the mailing or notification of the pre-interview communication prepared by the examiner.

4. Other attachments: _____

Signature /Patrick D. Benedicto, Reg. No. 40,909/	Date June 13, 2012
Name (Print/Typed) PATRICK D. BENEDICTO	Registration Number 40,909

Note: *Signatures of all the inventors or assignees of record of the entire interest or their representative(s) are required in accordance with 37 CFR 1.33 and 11.18. Please see 37 CFR 1.4(d) for the form of the signature. If necessary, submit multiple forms for more than one signature, see below*.*

■ *Total of 1 forms are submitted.

The information is required to obtain or retain a benefit by the public which is to file (and by the USPTO to process) an application. Confidentiality is governed by 35 U.S.C. 122 and 37 CFR 1.11 and 1.14. This collection is estimated to take 12 hours to complete, including gathering, preparing, and submitting the completed application form to the USPTO. Time will vary depending upon the individual case. Any comments on the amount of time you require to complete this form and/or suggestions for reducing this burden, should be sent to the Chief Information Officer, U.S. Patent and Trademark Office, U.S. Department of Commerce, P.O. Box 1450, Alexandria, VA 22313-1450. DO NOT SEND FEES OR COMPLETED FORMS TO THIS ADDRESS. **SEND TO: Commissioner for Patents, P.O. Box 1450, Alexandria, VA 22313-1450.**

If you need assistance in completing the form, call 1-800-PTO-9199 and select option 2.

Maxeon EX2012
CSI v. Maxeon
IPR2024-01039

Doc Code: FAI.REQ
Document Description: Request First Action Interview

PTO/SB/413C (05-11)
Approved for use through 07/31/2012. OMB 0651-0031
U.S. Patent and Trademark Office; U. S. DEPARTMENT OF COMMERCE
Under the Paperwork Reduction Act of 1995, no persons are required to respond to a collection of information unless it displays a valid OMB control number.

REQUEST FOR FIRST ACTION INTERVIEW (FULL PILOT PROGRAM)

Attorney Docket Number: 10031.004210	Application Number (if known):	Filing date: 06/13/2012
First Named Inventor: Peter John Cousins	Title: FRONT CONTACT SOLAR CELL WITH FORMED EMITTER	

APPLICANT HEREBY REQUESTS A FIRST ACTION INTERVIEW IN THE ABOVE-IDENTIFIED APPLICATION. See Instruction Sheet on page 2.

1. The application must contain three (3) or fewer independent claims and twenty (20) or fewer total claims.

2. The application must not contain any multiple dependent claims.

3. By filing this request:

   Applicant is agreeing to make an election without traverse if the Office determines that the claims are not obviously directed to a single invention; and

   Applicant is agreeing not to request for a refund of the search fee and any excess claims fee paid in the application after the mailing or notification of the pre-interview communication prepared by the examiner.

4. Other attachments: _____

Signature /Patrick D. Benedicto, Reg. No. 40,909/	Date June 13, 2012
Name (Print/Typed) PATRICK D. BENEDICTO	Registration Number 40,909

Note: *Signatures of all the inventors or assignees of record of the entire interest or their representative(s) are required in accordance with 37 CFR 1.33 and 11.18. Please see 37 CFR 1.4(d) for the form of the signature. If necessary, submit multiple forms for more than one signature, see below*.*

■ *Total of 1 forms are submitted.

The information is required to obtain or retain a benefit by the public which is to file (and by the USPTO to process) an application. Confidentiality is governed by 35 U.S.C. 122 and 37 CFR 1.11 and 1.14. This collection is estimated to take 12 hours to complete, including gathering, preparing, and submitting the completed application form to the USPTO. Time will vary depending upon the individual case. Any comments on the amount of time you require to complete this form and/or suggestions for reducing this burden, should be sent to the Chief Information Officer, U.S. Patent and Trademark Office, U.S. Department of Commerce, P.O. Box 1450, Alexandria, VA 22313-1450. DO NOT SEND FEES OR COMPLETED FORMS TO THIS ADDRESS. SEND TO: **Commissioner for Patents, P.O. Box 1450, Alexandria, VA 22313-1450.**

If you need assistance in completing the form, call 1-800-PTO-9199 and select option 2.

IN THE UNITED STATES PATENT AND TRADEMARK OFFICE

In re Application of:

Peter John COUSINS

Application No.: unknown Examiner: unknown

Filing Date: on even date herewith Art Unit: unknown

Title: FRONT CONTACT SOLAR CELL WITH FORMED EMITTER

Honorable Commissioner for Patents
P.O. Box 1450
Alexandria, VA 22313-1450

PRELIMINARY AMENDMENT

INTRODUCTORY COMMENTS

Sir:

This paper is a preliminary amendment to the divisional application being filed herewith. Prior to examination, please enter the following amendments in the divisional application.

AMENDMENTS TO THE CLAIMS

1-8. (canceled)

9. (original) A method of fabricating a solar cell having a front side facing the sun to collect solar radiation during normal operation and a backside opposite the front side, the method comprising:

forming a layer of polysilicon over a back surface of an N-type silicon substrate on the backside of the solar cell;

forming a P-type dopant source over the layer of polysilicon;

forming a capping layer over the P-type dopant source; and

diffusing P-type dopants from the P-type dopant source to the layer of polysilicon to form a backside junction with the N-type silicon substrate; and

diffusing N-type dopants into a front surface of the N-type silicon substrate.

10. (original) The method of claim 9 wherein the P-type dopant source comprises borosilicate glass.

11. (original) The method of claim 9 wherein diffusing N-type dopants into the front surface of the N-type silicon substrate includes forming an N-type dopant source over the N-type silicon substrate and diffusing N-type dopants from the N-type dopants source into the N-type silicon substrate.

12. (original) The method of claim 11 wherein the N-type dopant source comprises phosphorus doped silicon dioxide.

13. (original) The method of claim 9 further comprising:

texturing the front surface of the N-type silicon substrate; and

forming an antireflective layer over the textured front surface of the N-type silicon substrate.

14. (original) The method of claim 13 wherein the antireflective layer comprises silicon nitride.

15. (original) The method of claim 9 wherein the diffusion of P-type dopants from the P-type dopant source to the layer of polysilicon and the diffusion of N-type dopants into the front surface of the N-type silicon substrate are performed in situ.

16. (original) The method of claim 9 wherein the capping layer comprises undoped silicon dioxide.

17-20. (canceled)

21. (new) A method of fabricating a solar cell comprising:

forming a layer of polysilicon over a back surface of a silicon substrate;

forming a first dopant source layer over the layer of polysilicon;

diffusing dopants from the first dopant source layer to the layer of polysilicon to form a backside junction with the silicon substrate; and

diffusing dopants into a front surface of the silicon substrate, the front surface of the silicon substrate facing the sun during normal operation.

22. (new) The method of claim 21 wherein the first dopant source layer comprises P-type dopants.

23. (new) The method of claim 21 wherein the first dopant source layer comprises borosilicate glass.

24. (new) The method of claim 21 wherein diffusing dopants into the front surface of the silicon substrate comprises forming a second dopant source layer over the silicon substrate and diffusing dopants from the second dopant source layer into the silicon substrate.

25. (new) The method of claim 24 wherein the second dopant source layer comprises phosphorus doped silicon dioxide.

26. (new) The method of claim 21 further comprising:

texturing the front surface of the silicon substrate; and

forming an antireflective layer over the textured front surface of the silicon substrate.

27. (new) The method of claim 21 wherein the diffusion of dopants from the first dopant source layer to the layer of polysilicon and the diffusion of dopants into the front surface of the silicon substrate are performed in situ.

28. (new) A method of fabricating a solar cell comprising:

forming an oxide layer over a back surface of a silicon substrate;

forming a layer of polysilicon over the oxide layer;

diffusing dopants into the layer of polysilicon to form a backside junction with the silicon substrate; and

diffusing dopants into a front surface of the silicon substrate, the front surface of the silicon substrate facing the sun during normal operation.

29. (new) The method of claim 21 wherein diffusing dopants into the layer of polysilicon to form the backside junction with the silicon substrate comprises:

forming a first dopant source layer over the layer of polysilicon; and

diffusing dopants from the first dopant source layer into the layer of polysilicon.

30. (new) The method of claim 21 wherein diffusing dopants into the front surface of the silicon substrate comprises forming a second dopant source layer over the silicon substrate and diffusing dopants from the second dopant source layer into the silicon substrate.

31. (new) The method of claim 21 further comprising:

texturing the front surface of the silicon substrate.

32. (new) The method of claim 31 further comprising:

forming an antireflective layer over the textured front surface of the silicon substrate.

REMARKS

With the above amendments, claims 9-16 and 21-32 remain in the application.

This application is a divisional of U.S. Application No. 12/070,742. No arguments or disclaimers made in that application apply to this divisional application and, consequently, it is asked that the Examiner review the presented set of claims in view of all of the prior art of record and any search that the Examiner deems appropriate.

If for any reason an insufficient fee has been paid, the Commissioner is hereby authorized to charge the insufficiency to Deposit Account No. 50-2427.

Respectfully submitted,
Peter John Cousins

Dated: June 13, 2012

/Patrick D. Benedicto/

Patrick D. Benedicto, Reg. No. 40,909
Okamoto & Benedicto LLP
P.O. Box 641330
San Jose, CA 95164
Tel.: (408)436-2110
Fax.: (408)436-2114

FRONT CONTACT SOLAR CELL WITH FORMED EMITTER

Inventors: Peter John Cousins

REFERENCE TO RELATED APPLICATION

This application is a divisional of U.S. Application No. 12/070,742, filed on February 20, 2008, which is incorporated herein by reference in its entirety.

BACKGROUND OF THE INVENTION

1. Field of the Invention

The present invention relates generally to solar cells, and more particularly but not exclusively to solar cell fabrication processes and structures.

2. Description of the Background Art

Solar cells are well known devices for converting solar radiation to electrical energy. They may be fabricated on a semiconductor wafer using semiconductor processing technology. A solar cell includes P-type and N-type diffusion regions that form a junction. Solar radiation impinging on the solar cell creates electrons and holes that migrate to the diffusion regions, thereby creating voltage differentials between the diffusion regions. In a backside contact solar cell, both the diffusion regions and the metal contacts coupled to them are on the backside of the solar cell. The metal contacts allow an external electrical circuit to be coupled to and be powered by the solar cell.

In a front contact solar cell, at least one of the metal contacts making an electrical connection to a diffusion region is on the front side of the solar cell. The front side of the solar cell, which is opposite the backside, faces the sun during normal operation to collect solar radiation. While backside contact solar cells have an aesthetic advantage over front contact solar cells due to the absence of metal contacts on the front side, and are thus preferred for residential applications, aesthetics is not a major requirement for power plants and other applications where power generation is the main concern. Disclosed herein are structures for a relatively efficient and cost-effective front contact solar cell and processes for manufacturing same.

SUMMARY

A bipolar solar cell includes a backside junction formed by an N-type silicon substrate and a P-type polysilicon emitter formed on the backside of the solar cell. An antireflection layer may be formed on a textured front surface of the silicon substrate. A negative polarity metal contact on the front side of the solar cell makes an electrical connection to the substrate, while a positive polarity metal contact on the backside of the solar cell makes an electrical connection to the polysilicon emitter. An external electrical circuit may be connected to the negative and positive metal contacts to be powered by the solar cell. The positive polarity metal contact may form an infrared reflecting layer with an underlying dielectric layer for increased solar radiation collection.

These and other features of the present invention will be readily apparent to persons of ordinary skill in the art upon reading the entirety of this disclosure, which includes the accompanying drawings and claims.

DESCRIPTION OF THE DRAWINGS

FIG. 1 schematically shows a cross-section of a solar cell in accordance with an embodiment of the present invention.

FIG. 2 is a plan view schematically showing the front side of the solar cell of FIG. 1.

FIG. 3 is a plan view schematically showing the backside of the solar cell of FIG. 1.

FIG. 4, which comprises FIGS. 4A-4M, schematically illustrates the fabrication of the solar cell of FIG. 1 in accordance with an embodiment of the present invention.

The use of the same reference label in different figures indicates the same or like components. The figures are not drawn to scale.

DETAILED DESCRIPTION

In the present disclosure, numerous specific details are provided, such as examples of apparatus, process parameters, materials, process steps, and structures, to provide a thorough understanding of embodiments of the invention. Persons of ordinary skill in the art will recognize, however, that the invention can be practiced

without one or more of the specific details. In other instances, well-known details are not shown or described to avoid obscuring aspects of the invention.

FIG. 1 schematically shows a cross-section of a solar cell 100 in accordance with an embodiment of the present invention. The solar cell 100 has a front side where a metal contact 102 is located and a backside on a same side as the metal contact 110. The front side faces the sun during normal operation to collect solar radiation.

In the example of FIG. 1, the solar cell 100 includes a backside junction formed by a P-type doped polysilicon emitter 108 serving as a P-type diffusion region and an N-type silicon substrate 101 servings as an N-type diffusion region. The N-type silicon substrate 101 may comprise a long lifetime (e.g., 2 to 5ms) N-type silicon wafer and may have a thickness of about 100 to 250 μm as measured from the backside surface to a tip of the textured front side surface of the substrate. The front side surface of the substrate 101 is randomly textured (labeled as 113) and includes N-type doped regions 105 and 106 formed in the substrate. The N-type doped region 105 provides low front surface recombination and improves lateral conductivity whilst not compromising the blue response of the solar cell. The region 106, which may be a phosphorus diffusion, provides low contact resistance and minimizes contact recombination. The region 106 is also referred to as an "N-dot" because, in one embodiment, it forms a dot-shape to minimize the area of heavily diffused regions on the front surface. The N-type doped region 105 may have a sheet resistance of 100 to 500 Ω/sq, whilst the n-type doped region 106 may have a sheet resistance of 10 to 50 Ω/sq.

An antireflective coating (ARC) of silicon nitride layer 103 is formed on the textured front side surface of the substrate 101. The texture front side surface and the silicon nitride layer 103 help improve solar radiation collection efficiency. A passivating oxide 124 may comprise silicon dioxide thermally grown to a thickness of about 10 to 250 Angstroms on the front side surface of the substrate 101.

In one embodiment, the polysilicon emitter 108 is formed on a tunnel oxide layer 107. The polysilicon emitter 108 may be formed by forming a layer of polysilicon using Chemical Vapor Deposition (CVD), such as Low Pressure CVD (LPCVD) or Plasma Enhanced CVD (PECVD), and thermal anneal. The polysilicon emitter 108 may have a sheet resistance of 100 Ω/sq, and a thickness of 1000 to 2000 Angstroms. The tunnel oxide layer 107 may comprise silicon dioxide thermally grown to a thickness of about 10 to 50 Angstroms on the backside surface of the substrate 101. A metal contact 110 electrically connects to the polysilicon emitter 108 through contact holes 123 formed through a dielectric comprising a silicon dioxide layer 109. The metal contact 110 provides a positive polarity terminal to allow an external electrical circuit to be coupled to and be powered by the solar cell 100. The silicon dioxide layer 109 provides electrical isolation and allows the metal contact 110 to serve as an infrared reflecting layer for increased solar radiation collection. In one embodiment, the metal contact 110 comprises silver having a conductance of about 5-25 mΩ.cm and a thickness of about 15-35μm.

On the front side of the solar cell 100, the metal contact 102 electrically connects to the region 106 through a contact hole 120 formed through the silicon nitride layer

103. The metal contact 102 provides a negative polarity terminal to allow an external electrical circuit to be coupled to and be powered by the solar cell 100. In one embodiment, the metal contact 102 comprises silver having a sheet resistance of about 5mΩ.cm and a thickness of about 15μm. The pitch between adjacent metal contacts 102 may be about 1 to 4 mm. In one embodiment, the metal contacts 102 are spaced at 400 to 1000 μm along each metal contact 102 (see FIG. 2).

In the example of FIG. 1, the edge isolation trench 111 is formed through the silicon dioxide layer 109, the polysilicon emitter 108, and a portion of the substrate 101 to provide edge electrical isolation.

FIG. 2 is a plan view schematically showing the front side of the solar cell 100. In the example of FIG. 2, two bus bars 201 run parallel on the front side of the substrate 101. The contact holes 120, in which the metal contacts 102 are formed, may each have a diameter of about 50 to 200 μm. A plurality of metal contacts 102 is formed perpendicular to the bus bars 201. Each metal contact 102 may have a width of about 60-120μm.

FIG. 3 is a plan view schematically showing the backside of the solar cell 100. In the example of FIG. 3, two bus bars 301, which are electrically coupled to metal contacts 110, run parallel on the backside. In practice, the bus bars 201 and 301 will be electrically connected to corresponding bus bars of adjacent solar cells to form an array of solar cells.

Solar cells have gained wide acceptance among energy consumers as a viable renewable energy source. Still, to be competitive with other energy sources, a solar cell

manufacturer must be able to fabricate an efficient solar cell at relatively low cost. With this goal in mind, a process for manufacturing the solar cell 100 is now discussed with reference to FIGS. 4A-4M.

FIG. 4, which comprises FIGS. 4A-4M, schematically illustrates the fabrication of the solar cell 100 in accordance with an embodiment of the present invention.

In FIG. 4A, an N-type silicon substrate 101 is prepared for processing into a solar cell by undergoing a damage etch step. The substrate 101 is in wafer form in this example, and is thus typically received with damaged surfaces due to the sawing process used by the wafer vendor to slice the substrate 101 from its ingot. The substrate 101 may be about 100 to 200 microns thick as received from the wafer vendor. In one embodiment, the damage etch step involves removal of about 10 to 20 μm from each side of the substrate 101 using a wet etch process comprising potassium hydroxide. The damage etch step may also include cleaning of the substrate 101 to remove metal contamination.

In FIG. 4B, tunnel oxides 402 and 107 are formed on the front and back surfaces, respectively, of the substrate 101. The tunnel oxides 402 and 107 may comprise silicon dioxide thermally grown to a thickness of about 10 to 50 Angstroms on the surfaces of the N-type silicon substrate 101. A layer of polysilicon is then formed on the tunnel oxides 402 and 107 to form the polysilicon layer 401 and the polysilicon emitter 108, respectively. Each of the polysilicon layer 401 and the polysilicon emitter 108 may be formed to a thickness of about 1000 to 2000 Angstroms by CVD.

In FIG. 4C, a P-type dopant source 461 is formed on the polysilicon emitter 108. As its name implies, the P-type dopant source 461 provides a source of P-type dopants for diffusion into the polysilicon emitter 108 in a subsequent dopant drive-in step. A dielectric capping layer 462 is formed on the P-type dopant source 461 to prevent dopants from escaping from the backside of the solar cell during the drive-in step. In one embodiment, the P-type dopant source comprises BSG (borosilicate glass) deposited to a thickness of about 500 to 1000 Angstroms by atmospheric pressure CVD (APCVD) and has a dopant concentration of 5 to 10% by weight, while the capping layer 462 comprises undoped silicon dioxide formed to a thickness of about 2000 to 3000 Angstroms also by APCVD.

In FIG. 4D, the edge isolation trench 111 is formed near the edge of the substrate 101 on the backside. The trench 111 is relatively shallow (e.g., 10 μm deep into the substrate 101) and provides edge electrical isolation. In one embodiment, the trench 111 is formed by cutting through the capping layer 462, the P-type dopant source 461, the polysilicon emitter 108, the tunnel oxide 107, and into a shallow portion of the substrate 101 using a laser.

In FIG. 4E, exposed regions on the front surface of the substrate 101 is randomly textured to form the textured surface 113. In one embodiment, the front surface of the substrate 101 is textured with random pyramids using a wet etch process comprising potassium hydroxide and isopropyl alcohol.

In FIG. 4F, an N-type dopant source 412 is formed on regions of the textured surface 113 where contact holes 120 (see FIG. 1) will be subsequently formed to allow

subsequently formed metal contacts 102 to electrically connect to the substrate 101. As its name implies, the N-type dopant source 412 provides a source of N-type dopants for diffusion into the front side of the substrate 101. In one embodiment, the N-type dopant source 412 is formed by inkjet printing the dopant material directly onto the substrate 101.

In one embodiment, the N-type dopant source 412 comprises silicon dioxide doped with phosphorus. Only one N-type dopant source 412 is shown in FIG. 4F for clarity of illustration. In practice, there are several dot-shaped N-type dopant sources 412, one for each region where a contact hole 120 is to be formed (see FIG. 2). This allows formation of several dot shaped N-type doped regions 106 (see FIG. 1) after a subsequently performed drive-in step now discussed with reference to FIG. 4G.

In FIG. 4G, a dopant drive-in step is performed to diffuse N-type dopants from the N-type dopant source 412 into the substrate 101 to form the N-type dope region 106, to diffuse P-type dopants from the P-type dopant source 461 to the polysilicon emitter 108, and to diffuse N-type dopants into the front side of the substrate 101 to form the N-type doped region 105. Silicon dioxide layer 109 represents layers 461 and 462 after the drive-in step. The polysilicon emitter 108 also becomes a P-type doped layer after the drive-in step. The N-type doped region 105 may be formed by exposing the sample of FIG. 4G to phosphorus in a diffusion furnace, for example. The use of the N-type dopant source 412 allows for a more controlled and concentrated N-type diffusion to the N-type doped region 106. The thin thermal silicon dioxide layer 124 may be grown on the textured surface 113 during the drive-in process.

The drive-in step to dope the polysilicon emitter 108 on the backside and to form the N-type doped regions 105 and 106 on the front side may be formed in-situ, which in the context of the present disclosure means a single manual (i.e., by fabrication personnel) loading of the substrate 101 in a furnace or other single chamber or multi-chamber processing tool. In one embodiment, the drive-in step is performed in a diffusion furnace. The preceding sequence of steps leading to the drive-in step allows for in-situ diffusion, which advantageously helps in lowering fabrication cost.

It is to be noted that the step of using an N-type dopant source 412 to diffuse dopants into the N-type doped region 106 may be omitted in some applications. That is, in an alternative process, the formation of the N-type dopant source 412 in FIG. 4F may be omitted. In that case, the N-type doped regions 105 and 106 will be both doped by introduction of an N-type dopant in the diffusion furnace during the drive-in step. All other process steps disclosed herein remain essentially the same.

In FIG. 4H, the antireflective coating of silicon nitride layer 103 is formed over the textured surface 113 after removal of the N-type dopant source 412. Besides being an antireflective coating, the silicon nitride layer 103 also advantageously serves as a dielectric, enabling the selective contacts to be formed on the front surface to reduce front surface recombination. The silicon nitride layer 103 may be formed to a thickness of about 450 Angstroms by PECVD, for example.

In FIG. 4I, a front contact mask 420 is formed on the silicon nitride layer 103 to create a pattern 421 defining the contact holes 120 (see FIG. 1). The mask 420 may

comprise an acid resistance organic material, such as a resist, and formed using a printing process, such as screen printing or inkjet printing.

In FIG. 4J, a back contact mask 422 is formed on the silicon dioxide layer 109 to create patterns 423 defining the contact holes 123 (see FIG. 1). Similar to the mask 420, the mask 422 may comprise an organic material formed using a printing process.

In FIG. 4K, contact holes 120 and 123 are formed by removing exposed portions of the silicon nitride layer 103 and the silicon dioxide 109 in a contact etch step. In one embodiment, the contact holes 120 are formed by using a selective etch process that removes exposed portions of the silicon nitride layer 103 and stops on the substrate 101. The same etch process removes exposed portions of the silicon dioxide 109 and stops on the polysilicon emitter 108. In one embodiment, the etch process comprises a BOE (buffered oxide etch).

In FIG. 4L, the metal contact 110 is formed on the silicon dioxide layer 109 to fill the contact holes 123 and make electrical connection to the polysilicon emitter 108. The metal contact 110 may be formed using a printing process. The metal contact 110 may comprise silver, which, together with the silicon dioxide layer 109, makes an excellent backside infrared reflector. Other metals may also be used as a metal contact 110, such as aluminum, for example.

In FIG. 4M, the metal contact 120 is formed on the silicon nitride layer 103 to fill the contact holes 120 and make electrical connection to the substrate 101. The metal contact 120 may comprise silver and formed using a printing process.

Formation of the metal contacts 110 and 102 may be followed by a firing step. The firing step is applicable when using screen printed silver paste as metal contacts, but not when using other processes or metals. The solar cell 100 may then be visually inspected and tested.

While specific embodiments of the present invention have been provided, it is to be understood that these embodiments are for illustration purposes and not limiting. Many additional embodiments will be apparent to persons of ordinary skill in the art reading this disclosure.

CLAIMS

What is claimed is:

1. A solar cell having a front side facing the sun to collect solar radiation during normal operation and a backside opposite the front side, the solar cell comprising:

an N-type silicon substrate;

a textured surface on the N-type silicon substrate on the front side of the solar cell;

an antireflective layer over the textured surface of the N-type silicon substrate;

a P-type polysilicon emitter forming a backside junction with the N-type silicon substrate;

a negative polarity metal contact making an electrical connection to the N-type silicon substrate from the front side of the solar cell; and

a positive polarity metal contact making an electrical connection to the P-type polysilicon emitter from the backside of the solar cell.

2. The solar cell of claim 1 wherein the antireflective layer comprises a layer of silicon nitride.

3. The solar cell of claim 1 further comprising a dielectric layer over the P-type polysilicon emitter.

4. The solar cell of claim 3 wherein the dielectric layer comprises silicon dioxide.

5. The solar cell of claim 3 further comprising a trench cutting through the dielectric layer and the P-type polysilicon emitter and into a portion of the N-type silicon substrate on the backside of the solar cell.

6. The solar cell of claim 1wherein the positive polarity metal contact comprises a metal forming an infrared reflecting layer with a dielectric layer.

7. The solar cell of claim 1 wherein the positive polarity metal contact comprises silver forming an infrared reflecting layer with a dielectric layer comprising silicon dioxide.

8. The solar cell of claim 1 wherein the negative polarity metal contact comprises a metal formed in a contact hole to the N-type silicon substrate.

9. A method of fabricating a solar cell having a front side facing the sun to collect solar radiation during normal operation and a backside opposite the front side, the method comprising:

forming a layer of polysilicon over a back surface of an N-type silicon substrate on the backside of the solar cell;

forming a P-type dopant source over the layer of polysilicon;

forming a capping layer over the P-type dopant source; and

diffusing P-type dopants from the P-type dopant source to the layer of polysilicon to form a backside junction with the N-type silicon substrate; and

diffusing N-type dopants into a front surface of the N-type silicon substrate.

10. The method of claim 9 wherein the P-type dopant source comprises borosilicate glass.

11. The method of claim 9 wherein diffusing N-type dopants into the front surface of the N-type silicon substrate includes forming an N-type dopant source over the N-type silicon substrate and diffusing N-type dopants from the N-type dopants source into the N-type silicon substrate.

12. The method of claim 11 wherein the N-type dopant source comprises phosphorus doped silicon dioxide.

13. The method of claim 9 further comprising:

texturing the front surface of the N-type silicon substrate; and

forming an antireflective layer over the textured front surface of the N-type silicon substrate.

14. The method of claim 13 wherein the antireflective layer comprises silicon nitride.

15. The method of claim 9 wherein the diffusion of P-type dopants from the P-type dopant source to the layer of polysilicon and the diffusion of N-type dopants into the front surface of the N-type silicon substrate are performed in situ.

16. The method of claim 9 wherein the capping layer comprises undoped silicon dioxide.

17. A solar cell having a front side facing the sun to collect solar radiation during normal operation and a backside opposite the front side, the solar cell comprising:

a substrate having a textured front surface;

an emitter layer formed over a back surface of the substrate, the emitter layer forming a backside junction with the substrate;

a first metal contact making an electrical connection to the substrate on the front side of the solar cell; and

a second metal contact making an electrical connection to the emitter layer on the backside of the solar cell, the first metal contact and the second metal contact being configured to allow an external electrical circuit to be powered by the solar cell.

18. The solar cell of claim 17 further comprising an antireflective layer over the textured front surface of the substrate.

19. The solar cell of claim 17 wherein the substrate comprises an N-type silicon substrate and the emitter layer comprises a P-type doped polysilicon.

20. The solar cell of claim 17 wherein the second metal contact comprises silver formed over a layer of silicon dioxide.

ABSTRACT

A bipolar solar cell includes a backside junction formed by an N-type silicon substrate and a P-type polysilicon emitter formed on the backside of the solar cell. An antireflection layer may be formed on a textured front surface of the silicon substrate. A negative polarity metal contact on the front side of the solar cell makes an electrical connection to the substrate, while a positive polarity metal contact on the backside of the solar cell makes an electrical connection to the polysilicon emitter. An external electrical circuit may be connected to the negative and positive metal contacts to be powered by the solar cell. The positive polarity metal contact may form an infrared reflecting layer with an underlying dielectric layer for increased solar radiation collection.

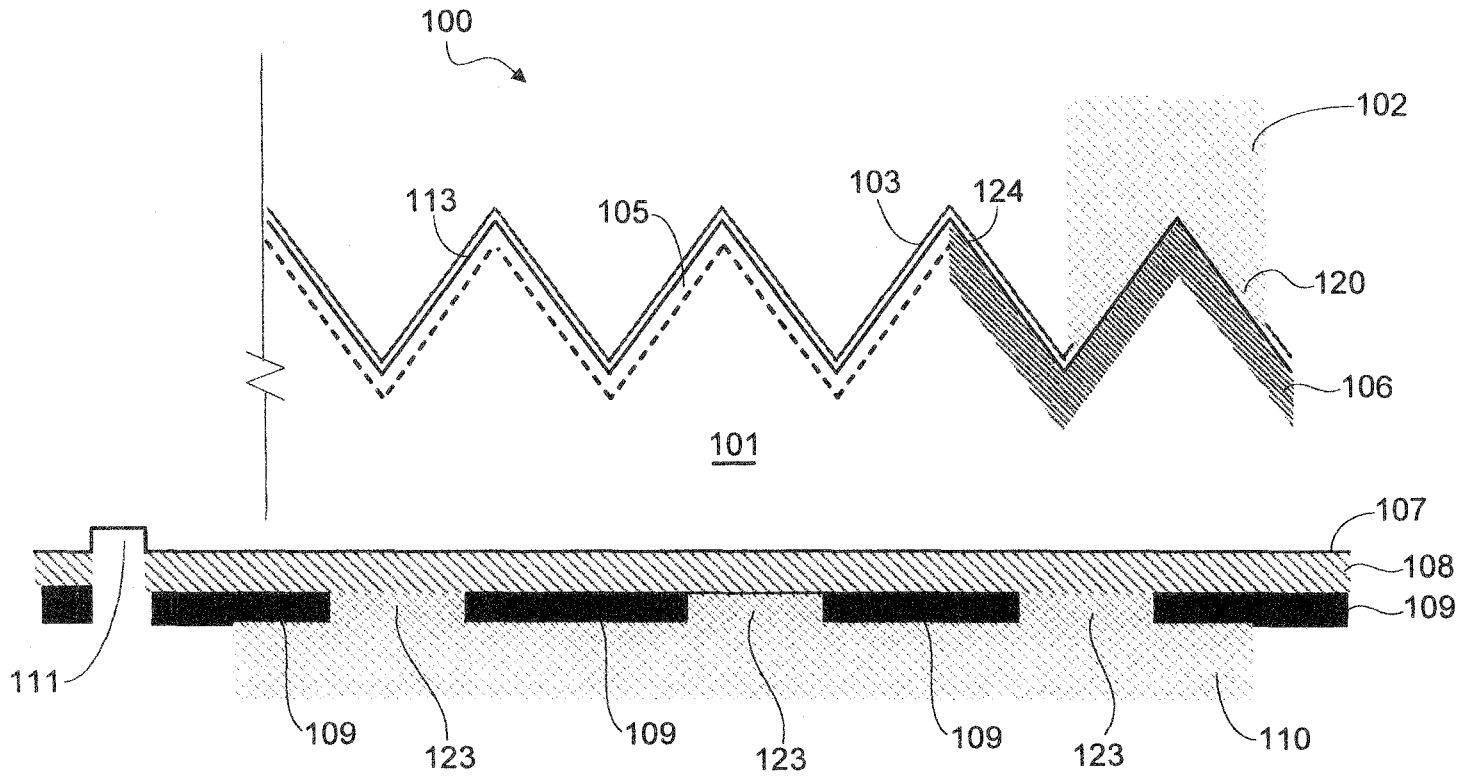
100
102
113
105
103
124
120
106
101
107
108
109
111
109
123
109
123
109
123
110

FIG. 1

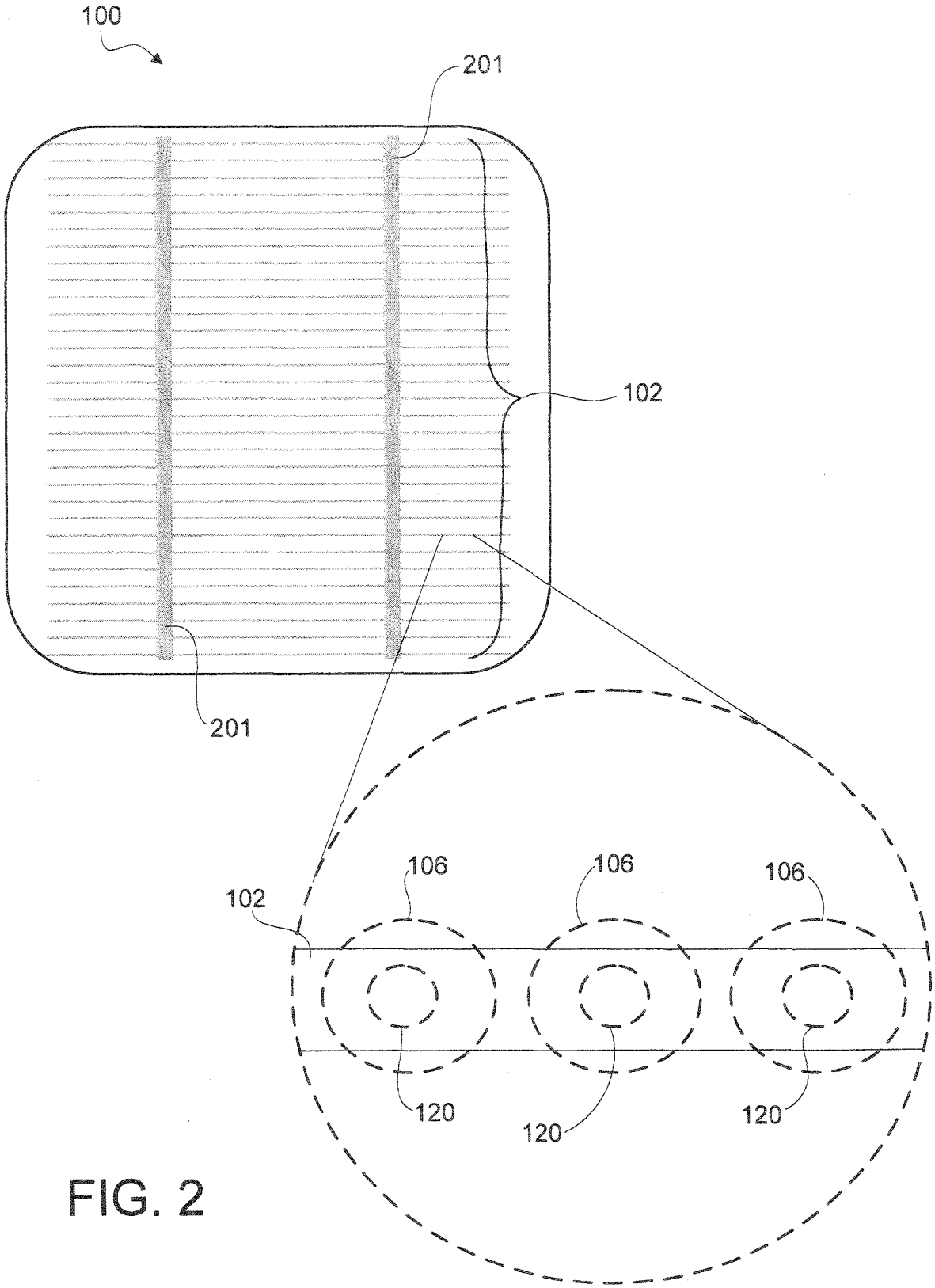

FIG. 2

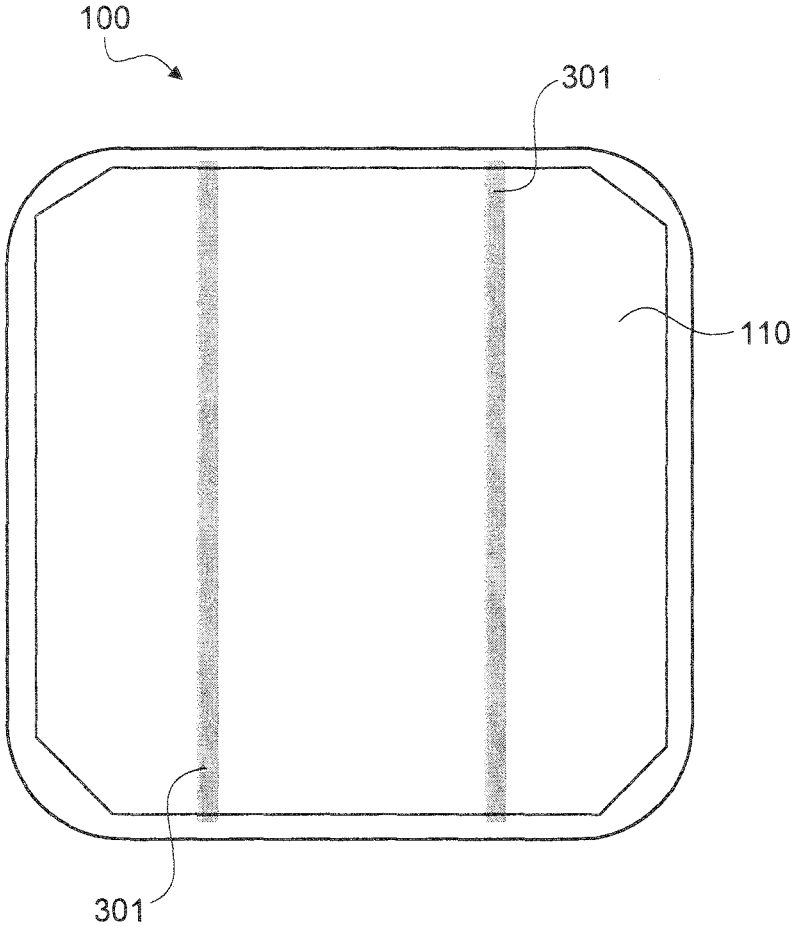

FIG. 3

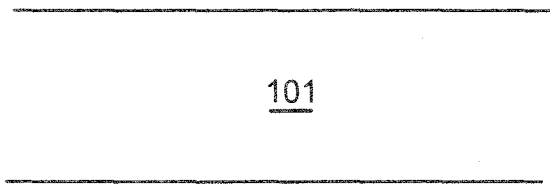

FIG. 4A

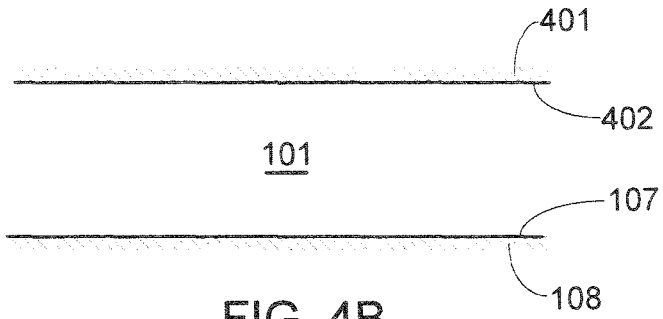

FIG. 4B

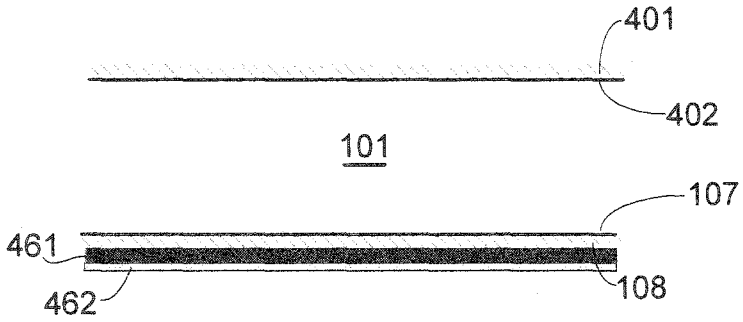

FIG. 4C

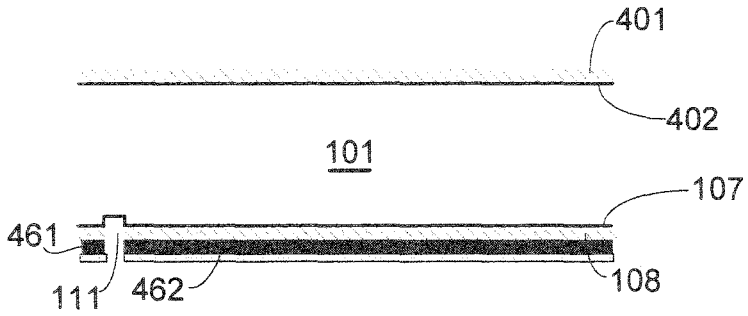

FIG. 4D

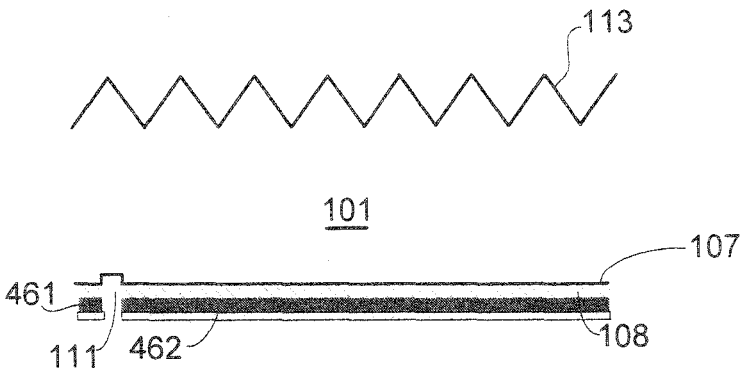

FIG. 4E

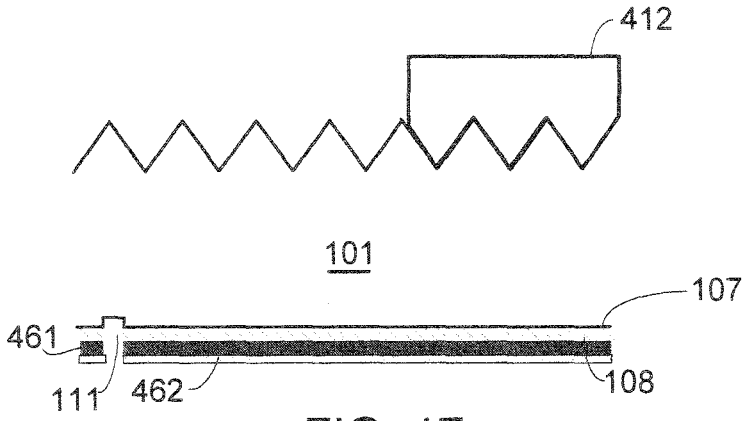

FIG. 4F

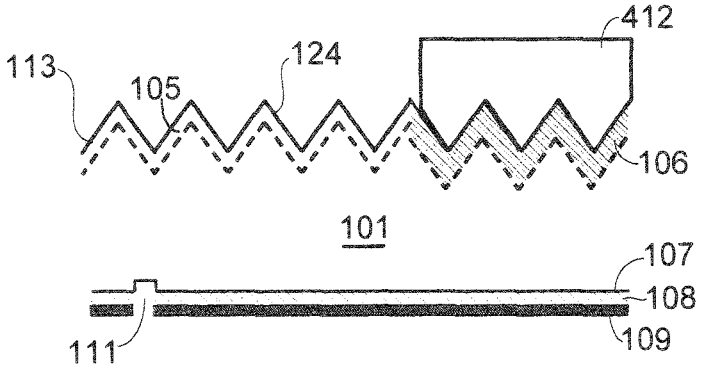

FIG. 4G

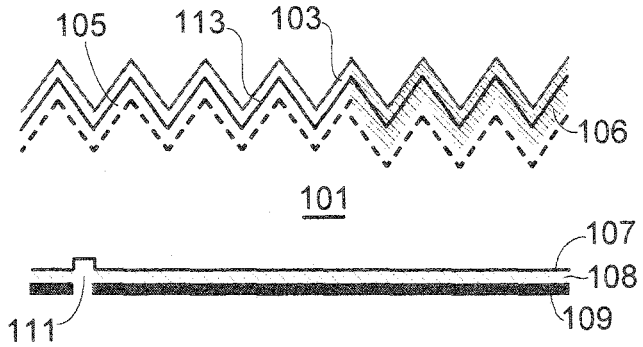

FIG. 4H

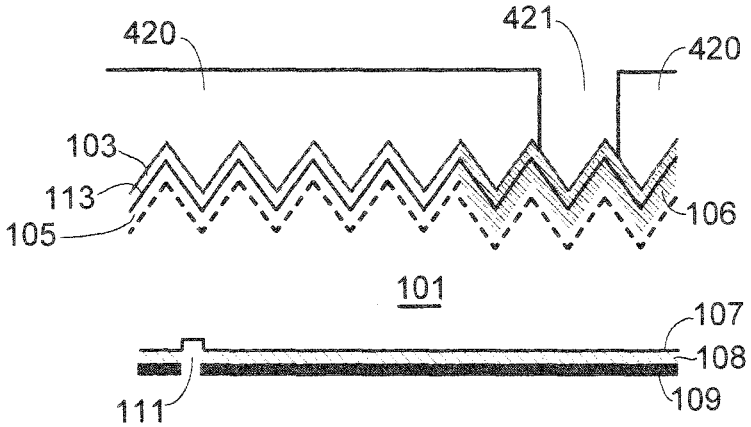

FIG. 4I

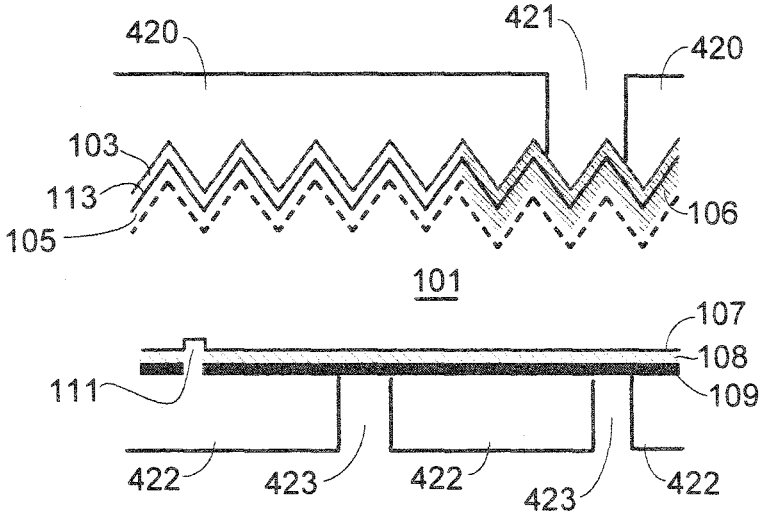

FIG. 4J

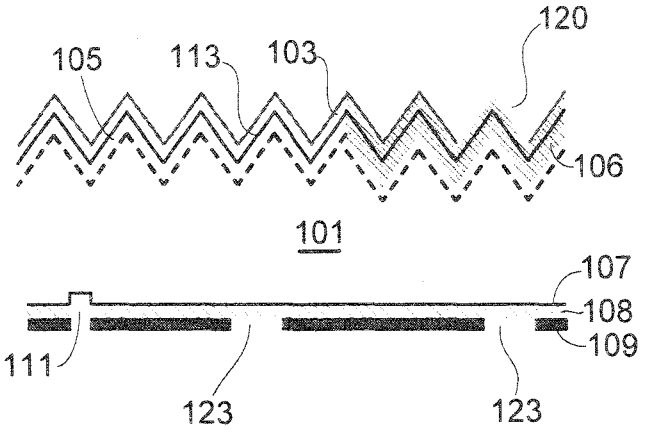

FIG. 4K

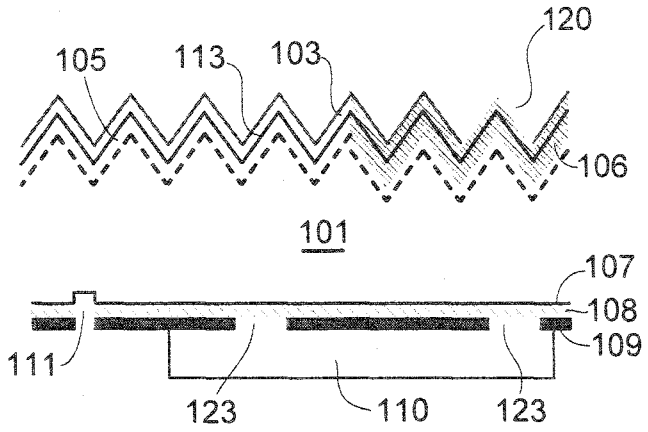

FIG. 4L

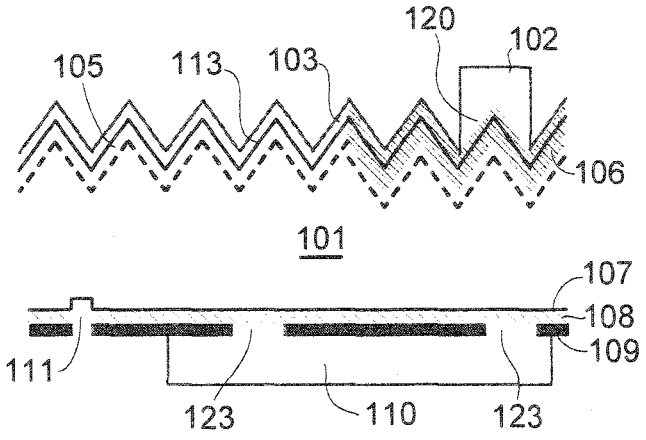

FIG. 4M

Electronic Patent Application Fee Transmittal

Application Number:	
Filing Date:	
Title of Invention:	FRONT CONTACT SOLAR CELL WITH FORMED EMITTER
First Named Inventor/Applicant Name:	Peter John COUSINS
Filer:	Patrick D. Benedicto/jina mangaoang
Attorney Docket Number:	10031.004210

Filed as Large Entity

Utility under 35 USC 111(a) Filing Fees

Description	Fee Code	Quantity	Amount	Sub-Total in USD($)
Basic Filing:				
Utility application filing	1011	1	380	380
Utility Search Fee	1111	1	620	620
Utility Examination Fee	1311	1	250	250
Pages:				
Claims:				
Miscellaneous-Filing:				
Petition:				
Patent-Appeals-and-Interference:				

Description	Fee Code	Quantity	Amount	Sub-Total in USD($)
Post-Allowance-and-Post-Issuance:				
Extension-of-Time:				
Miscellaneous:				
			Total in USD ($)	**1250**

Electronic Acknowledgement Receipt

EFS ID:	13003714
Application Number:	13495577
International Application Number:	
Confirmation Number:	3380
Title of Invention:	FRONT CONTACT SOLAR CELL WITH FORMED EMITTER
First Named Inventor/Applicant Name:	Peter John COUSINS
Customer Number:	74254
Filer:	Patrick D. Benedicto/jina mangaoang
Filer Authorized By:	Patrick D. Benedicto
Attorney Docket Number:	10031.004210
Receipt Date:	13-JUN-2012
Filing Date:	
Time Stamp:	15:56:59
Application Type:	Utility under 35 USC 111(a)

Payment information:

Submitted with Payment	yes
Payment Type	Credit Card
Payment was successfully received in RAM	$1250
RAM confirmation Number	14298
Deposit Account	502427
Authorized User	BENEDICTO,PATRICK D

The Director of the USPTO is hereby authorized to charge indicated fees and credit any overpayment as follows:

Charge any Additional Fees required under 37 C.F.R. Section 1.16 (National application filing, search, and examination fees)

Charge any Additional Fees required under 37 C.F.R. Section 1.17 (Patent application and reexamination processing fees)

Charge any Additional Fees required under 37 C.F.R. Section 1.21 (Miscellaneous fees and charges)

File Listing:

Document Number	Document Description	File Name	File Size(Bytes)/ Message Digest	Multi Part /.zip	Pages (if appl.)
1	Application Data Sheet	ADS-sb0014.pdf	895218 3d9ba120060b010cd0667dfa75ddf1332785783a	no	4
Warnings:					
Information:					
2	Oath or Declaration filed	Declaration.pdf	247217 530d0d752c9509ab645441f955dfa66079136a7b	no	2
Warnings:					
Information:					
3	Power of Attorney	PowerOfAttorney.pdf	118587 569ca45c9498d2965d977330b84d104204805978	no	1
Warnings:					
Information:					
4	First Action Interview - Enrollment Request	FirstActionInterviewRequest-sb0413C.pdf	105851 4e9e59d23ca00b2816712505a686aa9af9f1a472	no	1
Warnings:					
Information:					
5		S0123US1_PreliminaryAmendment.pdf	66417 15068ab95ddf8f90ff6656fc0db3df653c260495	yes	6

Multipart Description/PDF files in .zip description

Document Description	Start	End
Preliminary Amendment	1	1
Claims	2	5
Applicant Arguments/Remarks Made in an Amendment	6	6

Warnings:					
Information:					
6		S0123US1_DivisionalApplication.pdf	2431832 515f970105ceab42697202c193890cfdcb72340d	yes	24

Multipart Description/PDF files in .zip description

Document Description	Start	End

	Specification	1	12
	Claims	13	16
	Abstract	17	17
	Drawings-only black and white line drawings	18	24

Warnings:

Information:

7	Fee Worksheet (SB06)	fee-info.pdf	33045 17e6bd40a51f15387761d92e6853197c11170037	no	2

Warnings:

Information:

Total Files Size (in bytes):	3898167

This Acknowledgement Receipt evidences receipt on the noted date by the USPTO of the indicated documents, characterized by the applicant, and including page counts, where applicable. It serves as evidence of receipt similar to a Post Card, as described in MPEP 503.

<u>New Applications Under 35 U.S.C. 111</u>
If a new application is being filed and the application includes the necessary components for a filing date (see 37 CFR 1.53(b)-(d) and MPEP 506), a Filing Receipt (37 CFR 1.54) will be issued in due course and the date shown on this Acknowledgement Receipt will establish the filing date of the application.

<u>National Stage of an International Application under 35 U.S.C. 371</u>
If a timely submission to enter the national stage of an international application is compliant with the conditions of 35 U.S.C. 371 and other applicable requirements a Form PCT/DO/EO/903 indicating acceptance of the application as a national stage submission under 35 U.S.C. 371 will be issued in addition to the Filing Receipt, in due course.

<u>New International Application Filed with the USPTO as a Receiving Office</u>
If a new international application is being filed and the international application includes the necessary components for an international filing date (see PCT Article 11 and MPEP 1810), a Notification of the International Application Number and of the International Filing Date (Form PCT/RO/105) will be issued in due course, subject to prescriptions concerning national security, and the date shown on this Acknowledgement Receipt will establish the international filing date of the application.

Electronic Acknowledgement Receipt

EFS ID:	13003714
Application Number:	13495577
International Application Number:	
Confirmation Number:	3380
Title of Invention:	FRONT CONTACT SOLAR CELL WITH FORMED EMITTER
First Named Inventor/Applicant Name:	Peter John COUSINS
Customer Number:	74254
Filer:	Patrick D. Benedicto/jina mangaoang
Filer Authorized By:	Patrick D. Benedicto
Attorney Docket Number:	10031.004210
Receipt Date:	13-JUN-2012
Filing Date:	
Time Stamp:	15:56:59
Application Type:	Utility under 35 USC 111(a)

Payment information:

Submitted with Payment	yes
Payment Type	Credit Card
Payment was successfully received in RAM	$1250
RAM confirmation Number	14298
Deposit Account	502427
Authorized User	BENEDICTO,PATRICK D

The Director of the USPTO is hereby authorized to charge indicated fees and credit any overpayment as follows:

Charge any Additional Fees required under 37 C.F.R. Section 1.16 (National application filing, search, and examination fees)

Charge any Additional Fees required under 37 C.F.R. Section 1.17 (Patent application and reexamination processing fees)

Charge any Additional Fees required under 37 C.F.R. Section 1.21 (Miscellaneous fees and charges)

File Listing:

Document Number	Document Description	File Name	File Size(Bytes)/ Message Digest	Multi Part /.zip	Pages (if appl.)
1	Application Data Sheet	ADS-sb0014.pdf	895218 3d9ba120060b010cd0667dfa75ddf1332785783a	no	4
Warnings:					
Information:					
2	Oath or Declaration filed	Declaration.pdf	247217 530d0d752c9509ab645441f955dfa66079136a7b	no	2
Warnings:					
Information:					
3	Power of Attorney	PowerOfAttorney.pdf	118587 569ca45c9498d2965d977330b84d104204805978	no	1
Warnings:					
Information:					
4	First Action Interview - Enrollment Request	FirstActionInterviewRequest-sb0413C.pdf	105851 4e9e59d23ca00b2816712505a686aa9af9f1a472	no	1
Warnings:					
Information:					
5		S0123US1_PreliminaryAmendment.pdf	66417 15068ab95ddf8f90ff6656fc0db3df653c260495	yes	6

Multipart Description/PDF files in .zip description

Document Description	Start	End
Preliminary Amendment	1	1
Claims	2	5
Applicant Arguments/Remarks Made in an Amendment	6	6

Warnings:					
Information:					
6		S0123US1_DivisionalApplication.pdf	2431832 515f970105ceab42697202c193890cfdcb72340d	yes	24

Multipart Description/PDF files in .zip description

Document Description	Start	End

	Specification	1	12
	Claims	13	16
	Abstract	17	17
	Drawings-only black and white line drawings	18	24

Warnings:

Information:

7	Fee Worksheet (SB06)	fee-info.pdf	33045 17e6bd40a51f15387761d92e6853197c11170037	no	2

Warnings:

Information:

Total Files Size (in bytes):	3898167

This Acknowledgement Receipt evidences receipt on the noted date by the USPTO of the indicated documents, characterized by the applicant, and including page counts, where applicable. It serves as evidence of receipt similar to a Post Card, as described in MPEP 503.

<u>New Applications Under 35 U.S.C. 111</u>
If a new application is being filed and the application includes the necessary components for a filing date (see 37 CFR 1.53(b)-(d) and MPEP 506), a Filing Receipt (37 CFR 1.54) will be issued in due course and the date shown on this Acknowledgement Receipt will establish the filing date of the application.

<u>National Stage of an International Application under 35 U.S.C. 371</u>
If a timely submission to enter the national stage of an international application is compliant with the conditions of 35 U.S.C. 371 and other applicable requirements a Form PCT/DO/EO/903 indicating acceptance of the application as a national stage submission under 35 U.S.C. 371 will be issued in addition to the Filing Receipt, in due course.

<u>New International Application Filed with the USPTO as a Receiving Office</u>
If a new international application is being filed and the international application includes the necessary components for an international filing date (see PCT Article 11 and MPEP 1810), a Notification of the International Application Number and of the International Filing Date (Form PCT/RO/105) will be issued in due course, subject to prescriptions concerning national security, and the date shown on this Acknowledgement Receipt will establish the international filing date of the application.

Under the Paperwork Reduction Act of 1995, no persons are required to respond to a collection of information unless it contains a valid OMB control number.

Application Data Sheet 37 CFR 1.76	Attorney Docket Number	10031.004210
	Application Number	
Title of Invention	FRONT CONTACT SOLAR CELL WITH FORMED EMITTER	

The application data sheet is part of the provisional or nonprovisional application for which it is being submitted. The following form contains the bibliographic data arranged in a format specified by the United States Patent and Trademark Office as outlined in 37 CFR 1.76.
This document may be completed electronically and submitted to the Office in electronic format using the Electronic Filing System (EFS) or the document may be printed and included in a paper filed application.

Secrecy Order 37 CFR 5.2

☐ Portions or all of the application associated with this Application Data Sheet may fall under a Secrecy Order pursuant to 37 CFR 5.2 (Paper filers only. Applications that fall under Secrecy Order may not be filed electronically.)

Applicant Information:

Applicant 1 Remove

Applicant Authority ◉ Inventor ◯ Legal Representative under 35 U.S.C. 117 ◯ Party of Interest under 35 U.S.C. 118

Prefix	Given Name	Middle Name	Family Name	Suffix
	Peter	John	COUSINS	

Residence Information (Select One) ◉ US Residency ◯ Non US Residency ◯ Active US Military Service

City	Menlo Park	State/Province	CA	Country of Residence i	US

Citizenship under 37 CFR 1.41(b) i AU

Mailing Address of Applicant:

Address 1	SunPower Corporation		
Address 2	77 Rio Robles		
City	San Jose	State/Province	CA
Postal Code	95134	Country i	

All Inventors Must Be Listed - Additional Inventor Information blocks may be generated within this form by selecting the **Add** button. Add

Correspondence Information:

Enter either Customer Number or complete the Correspondence Information section below.
For further information see 37 CFR 1.33(a).

☐ **An Address is being provided for the correspondence Information of this application.**

Customer Number	000074254	
Email Address		Add Email Remove Email

Application Information:

Title of the Invention	FRONT CONTACT SOLAR CELL WITH FORMED EMITTER		
Attorney Docket Number	10031.004210	Small Entity Status Claimed	☐
Application Type	Nonprovisional		
Subject Matter	Utility		
Suggested Class (if any)		Sub Class (if any)	
Suggested Technology Center (if any)			
Total Number of Drawing Sheets (if any)	7	Suggested Figure for Publication (if any)	

Under the Paperwork Reduction Act of 1995, no persons are required to respond to a collection of information unless it contains a valid OMB control number.

Application Data Sheet 37 CFR 1.76	Attorney Docket Number	10031.004210
	Application Number	
Title of Invention	FRONT CONTACT SOLAR CELL WITH FORMED EMITTER	

Publication Information:

☐ Request Early Publication (Fee required at time of Request 37 CFR 1.219)

☒ **Request Not to Publish.** I hereby request that the attached application not be published under 35 U.S. C. 122(b) and certify that the invention disclosed in the attached application **has not and will not** be the subject of an application filed in another country, or under a multilateral international agreement, that requires publication at eighteen months after filing.

Representative Information:

Representative information should be provided for all practitioners having a power of attorney in the application. Providing this information in the Application Data Sheet does not constitute a power of attorney in the application (see 37 CFR 1.32).
Enter either Customer Number or complete the Representative Name section below. If both sections are completed the Customer Number will be used for the Representative Information during processing.

Please Select One:	◉ Customer Number	◯ US Patent Practitioner	◯ Limited Recognition (37 CFR 11.9)
Customer Number	000074254		

Domestic Benefit/National Stage Information:

This section allows for the applicant to either claim benefit under 35 U.S.C. 119(e), 120, 121, or 365(c) or indicate National Stage entry from a PCT application. Providing this information in the application data sheet constitutes the specific reference required by 35 U.S.C. 119(e) or 120, and 37 CFR 1.78(a)(2) or CFR 1.78(a)(4), and need not otherwise be made part of the specification.

Prior Application Status			Remove
Application Number	Continuity Type	Prior Application Number	Filing Date (YYYY-MM-DD)
	Division of	12/070742	2008-02-20

Additional Domestic Benefit/National Stage Data may be generated within this form by selecting the **Add** button. Add

Foreign Priority Information:

This section allows for the applicant to claim benefit of foreign priority and to identify any prior foreign application for which priority is not claimed. Providing this information in the application data sheet constitutes the claim for priority as required by 35 U.S.C. 119(b) and 37 CFR 1.55(a).

Remove

Application Number	Country [i]	Parent Filing Date (YYYY-MM-DD)	Priority Claimed
			◯ Yes ◉ No

Additional Foreign Priority Data may be generated within this form by selecting the **Add** button. Add

Assignee Information:

Providing this information in the application data sheet does not substitute for compliance with any requirement of part 3 of Title 37 of the CFR to have an assignment recorded in the Office.

Assignee 1 Remove

Under the Paperwork Reduction Act of 1995, no persons are required to respond to a collection of information unless it contains a valid OMB control number.

Application Data Sheet 37 CFR 1.76	Attorney Docket Number	10031.004210
	Application Number	
Title of Invention	FRONT CONTACT SOLAR CELL WITH FORMED EMITTER	

If the Assignee is an Organization check here. ☒			
Organization Name			
Mailing Address Information:			
Address 1			
Address 2			
City		**State/Province**	
Country [i]		Postal Code	
Phone Number		Fax Number	
Email Address			
Additional Assignee Data may be generated within this form by selecting the **Add** button.			Add

Signature:

A signature of the applicant or representative is required in accordance with 37 CFR 1.33 and 10.18. Please see 37 CFR 1.4(d) for the form of the signature.

Signature	/Patrick D. Benedicto, Reg. No. 40,909/			Date (YYYY-MM-DD)	2012-06-13
First Name	PATRICK D.	Last Name	BENEDICTO	Registration Number	40909

This collection of information is required by 37 CFR 1.76. The information is required to obtain or retain a benefit by the public which is to file (and by the USPTO to process) an application. Confidentiality is governed by 35 U.S.C. 122 and 37 CFR 1.14. This collection is estimated to take 23 minutes to complete, including gathering, preparing, and submitting the completed application data sheet form to the USPTO. Time will vary depending upon the individual case. Any comments on the amount of time you require to complete this form and/or suggestions for reducing this burden, should be sent to the Chief Information Officer, U.S. Patent and Trademark Office, U.S. Department of Commerce, P.O. Box 1450, Alexandria, VA 22313-1450. DO NOT SEND FEES OR COMPLETED FORMS TO THIS ADDRESS. **SEND TO: Commissioner for Patents, P.O. Box 1450, Alexandria, VA 22313-1450.**

Privacy Act Statement

The Privacy Act of 1974 (P.L. 93-579) requires that you be given certain information in connection with your submission of the attached form related to a patent application or patent. Accordingly, pursuant to the requirements of the Act, please be advised that: (1) the general authority for the collection of this information is 35 U.S.C. 2(b)(2); (2) furnishing of the information solicited is voluntary; and (3) the principal purpose for which the information is used by the U.S. Patent and Trademark Office is to process and/or examine your submission related to a patent application or patent. If you do not furnish the requested information, the U.S. Patent and Trademark Office may not be able to process and/or examine your submission, which may result in termination of proceedings or abandonment of the application or expiration of the patent.

The information provided by you in this form will be subject to the following routine uses:

1. The information on this form will be treated confidentially to the extent allowed under the Freedom of Information Act (5 U.S.C. 552) and the Privacy Act (5 U.S.C. 552a). Records from this system of records may be disclosed to the Department of Justice to determine whether the Freedom of Information Act requires disclosure of these records.

2. A record from this system of records may be disclosed, as a routine use, in the course of presenting evidence to a court, magistrate, or administrative tribunal, including disclosures to opposing counsel in the course of settlement negotiations.

3. A record in this system of records may be disclosed, as a routine use, to a Member of Congress submitting a request involving an individual, to whom the record pertains, when the individual has requested assistance from the Member with respect to the subject matter of the record.

4. A record in this system of records may be disclosed, as a routine use, to a contractor of the Agency having need for the information in order to perform a contract. Recipients of information shall be required to comply with the requirements of the Privacy Act of 1974, as amended, pursuant to 5 U.S.C. 552a(m).

5. A record related to an International Application filed under the Patent Cooperation Treaty in this system of records may be disclosed, as a routine use, to the International Bureau of the World Intellectual Property Organization, pursuant to the Patent Cooperation Treaty.

6. A record in this system of records may be disclosed, as a routine use, to another federal agency for purposes of National Security review (35 U.S.C. 181) and for review pursuant to the Atomic Energy Act (42 U.S.C. 218(c)).

7. A record from this system of records may be disclosed, as a routine use, to the Administrator, General Services, or his/her designee, during an inspection of records conducted by GSA as part of that agency's responsibility to recommend improvements in records management practices and programs, under authority of 44 U.S.C. 2904 and 2906. Such disclosure shall be made in accordance with the GSA regulations governing inspection of records for this purpose, and any other relevant (i.e., GSA or Commerce) directive. Such disclosure shall not be used to make determinations about individuals.

8. A record from this system of records may be disclosed, as a routine use, to the public after either publication of the application pursuant to 35 U.S.C. 122(b) or issuance of a patent pursuant to 35 U.S.C. 151. Further, a record may be disclosed, subject to the limitations of 37 CFR 1.14, as a routine use, to the public if the record was filed in an application which became abandoned or in which the proceedings were terminated and which application is referenced by either a published application, an application open to public inspections or an issued patent.

9. A record from this system of records may be disclosed, as a routine use, to a Federal, State, or local law enforcement agency, if the USPTO becomes aware of a violation or potential violation of law or regulation.

PTO/SB/01 (10-07)
Approved for use through 06/30/2010. OMB 0651-0032
U.S. Patent and Trademark Office; U.S. DEPARTMENT OF COMMERCE
Under the Paperwork Reduction Act of 1995, no persons are required to respond to a collection of information unless it contains a valid OMB control number.

DECLARATION FOR UTILITY OR DESIGN PATENT APPLICATION (37 CFR 1.63)

☒ Declaration Submitted With Initial Filing OR ☐ Declaration Submitted after Initial Filing (surcharge (37 CFR 1.16 (e)) required)

Attorney Docket Number	10031.004200
First Named Inventor	Peter John Cousins
COMPLETE IF KNOWN	
Application Number	/
Filing Date	
Art Unit	
Examiner Name	

I hereby declare that:

Each inventor's residence, mailing address, and citizenship are as stated below next to their name.

I believe the inventor(s) named below to be the original and first inventor(s) of the subject matter which is claimed and for which a patent is sought on the invention entitled:

FRONT CONTACT SOLAR CELL WITH FORMED EMITTER

the specification of which *(Title of the Invention)*

☒ is attached hereto

OR

☐ was filed on (MM/DD/YYYY) _____ as United States Application Number or PCT International Application Number _____ and was amended on (MM/DD/YYYY) _____ (if applicable).

I hereby state that I have reviewed and understand the contents of the above identified specification, including the claims, as amended by any amendment specifically referred to above.

I acknowledge the duty to disclose information which is material to patentability as defined in 37 CFR 1.56, including for continuation-in-part applications, material information which became available between the filing date of the prior application and the national or PCT international filing date of the continuation-in-part application.

I hereby claim foreign priority benefits under 35 U.S.C. 119(a)-(d) or (f), or 365(b) of any foreign application(s) for patent, inventor's or plant breeder's rights certificate(s), or 365(a) of any PCT international application which designated at least one country other than the United States of America, listed below and have also identified below, by checking the box, any foreign application for patent, inventor's or plant breeder's rights certificate(s), or any PCT international application having a filing date before that of the application on which priority is claimed.

Prior Foreign Application Number(s)	Country	Foreign Filing Date (MM/DD/YYYY)	Priority Not Claimed	Certified Copy Attached? YES	NO
			☐	☐	☐
			☐	☐	☐
			☐	☐	☐
			☐	☐	☐

☐ Additional foreign application numbers are listed on a supplemental priority data sheet PTO/SB/02B attached hereto.

This collection of information is required by 35 U.S.C. 115 and 37 CFR 1.63. The information is required to obtain or retain a benefit by the public which is to file (and by the USPTO to process) an application. Confidentiality is governed by 35 U.S.C. 122 and 37 CFR 1.11 and 1.14. This collection is estimated to take 21 minutes to complete, including gathering, preparing, and submitting the completed application form to the USPTO. Time will vary depending upon the individual case. Any comments on the amount of time you require to complete this form and/or suggestions for reducing this burden, should be sent to the Chief Information Officer, U.S. Patent and Trademark Office, U.S. Department of Commerce, P.O. Box 1450, Alexandria, VA 22313-1450. DO NOT SEND FEES OR COMPLETED FORMS TO THIS ADDRESS. **SEND TO: Commissioner for Patents, P.O. Box 1450, Alexandria, VA 22313-1450.**

If you need assistance in completing the form, call 1-800-PTO-9199 and select option 2.

PTO/SB/01 (10-07)
Approved for use through 06/30/2010. OMB 0651-0032
U.S. Patent and Trademark Office; U.S. DEPARTMENT OF COMMERCE
Under the Paperwork Reduction Act of 1995, no persons are required to respond to a collection of information unless it contains a valid OMB control number.

DECLARATION — Utility or Design Patent Application

Direct all correspondence to:	☒ The address associated with Customer Number	000074254	OR ☐ Correspondence address below
Name			
Address			
City	State	ZIP	
Country	Telephone	Email	

WARNING:

Petitioner/applicant is cautioned to avoid submitting personal information in documents filed in a patent application that may contribute to identity theft. Personal information such as social security numbers, bank account numbers, or credit card numbers (other than a check or credit card authorization form PTO-2038 submitted for payment purposes) is never required by the USPTO to support a petition or an application. If this type of personal information is included in documents submitted to the USPTO, petitioners/applicants should consider redacting such personal information from the documents before submitting them to the USPTO. Petitioner/applicant is advised that the record of a patent application is available to the public after publication of the application (unless a non-publication request in compliance with 37 CFR 1.213(a) is made in the application) or issuance of a patent. Furthermore, the record from an abandoned application may also be available to the public if the application is referenced in a published application or an issued patent (see 37 CFR 1.14). Checks and credit card authorization forms PTO-2038 submitted for payment purposes are not retained in the application file and therefore are not publicly available.

I hereby declare that all statements made herein of my own knowledge are true and that all statements made on information and belief are believed to be true; and further that these statements were made with the knowledge that willful false statements and the like so made are punishable by fine or imprisonment, or both, under 18 U.S.C. 1001 and that such willful false statements may jeopardize the validity of the application or any patent issued thereon.

NAME OF SOLE OR FIRST INVENTOR:	☐ A petition has been filed for this unsigned inventor		
Given Name (first and middle [if any]) PETER JOHN	Family Name or Surname COUSINS		
Inventor's Signature	Date 15 Feb. 2008		
Residence: City MENLO PARK	State CA	Country US	Citizenship AUSTRALIA
Mailing Address 6 FREDRICK COURT			
City MENLO PARK	State CA	Zip 94025	Country US

☐ Additional Inventors or a legal representative are being named on the _____ supplemental sheet(s) PTO/SB/02A or 02LR attached hereto.

PTO/SB/81 (01-06)
Approved for use through 12/31/2008. OMB 0651-0035
U.S. Patent and Trademark Office; U.S. DEPARTMENT OF COMMERCE
Under the Paperwork Reduction Act of 1995, no persons are required to respond to a collection of information unless it displays a valid OMB control number.

POWER OF ATTORNEY and CORRESPONDENCE ADDRESS INDICATION FORM

Application Number	
Filing Date	
First Named Inventor	Peter John Cousins
Title	Front Contact Solar Cell With Formed Emitter
Art Unit	unknown
Examiner Name	unknown
Attorney Docket Number	10031.004200

I hereby revoke all previous powers of attorney given in the above-identified application.

I hereby appoint:

☒ Practitioners associated with the Customer Number: **000074254**

OR

☐ Practitioner(s) named below:

Name	Registration Number

as my/our attorney(s) or agent(s) to prosecute the application identified above, and to transact all business in the United States Patent and Trademark Office connected therewith.

Please recognize or change the correspondence address for the above-identified application to:

☒ The address associated with the above-mentioned Customer Number

OR

☐ The address associated with Customer Number:

OR

☐ Firm *or* Individual Name			
Address			
City		State	ZIP
Country			
Telephone		Email	

I am the:

☒ Applicant/Inventor.

☐ Assignee of record of the entire interest. See 37 CFR 3.71.
Statement under 37 CFR 3.73(b) is enclosed. (Form PTO/SB/96)

SIGNATURE of Applicant or Assignee of Record

Signature		Date	15 Feb. 2008
Name	Peter John Cousins	Telephone	
Title and Company			

NOTE: Signatures of all the inventors or assignees of record of the entire interest or their representative(s) are required. Submit multiple forms if more than one signature is required, see below*.

☒ *Total of 1 form is submitted.

This collection of information is required by 37 CFR 1.31, 1.32 and 1.33. The information is required to obtain or retain a benefit by the public which is to file (and by the USPTO to process) an application. Confidentiality is governed by 35 U.S.C. 122 and 37 CFR 1.11 and 1.14. This collection is estimated to take 3 minutes to complete, including gathering, preparing, and submitting the completed application form to the USPTO. Time will vary depending upon the individual case. Any comments on the amount of time you require to complete this form and/or suggestions for reducing this burden, should be sent to the Chief Information Officer, U.S. Patent and Trademark Office, U.S. Department of Commerce, P.O. Box 1450, Alexandria, VA 22313-1450. DO NOT SEND FEES OR COMPLETED FORMS TO THIS ADDRESS. **SEND TO: Commissioner for Patents, P.O. Box 1450, Alexandria, VA 22313-1450.**

If you need assistance in completing the form, call 1-800-PTO-9199 and select option 2.

PTO/SB/06 (07-06)
Approved for use through 1/31/2007. OMB 0651-0032
U.S. Patent and Trademark Office; U.S. DEPARTMENT OF COMMERCE
Under the Paperwork Reduction Act of 1995, no persons are required to respond to a collection of information unless it displays a valid OMB control number.

PATENT APPLICATION FEE DETERMINATION RECORD

Substitute for Form PTO-875

Application or Docket Number	Filing Date	☐ To be Mailed
13/495,577	06/13/2012	

APPLICATION AS FILED – PART I

FOR	(Column 1) NUMBER FILED	(Column 2) NUMBER EXTRA	SMALL ENTITY ☐ RATE ($)	SMALL ENTITY FEE ($)	OR	OTHER THAN SMALL ENTITY RATE ($)	OTHER THAN SMALL ENTITY FEE ($)
☐ BASIC FEE (37 CFR 1.16(a), (b), or (c))	N/A	N/A	N/A			N/A	
☐ SEARCH FEE (37 CFR 1.16(k), (i), or (m))	N/A	N/A	N/A			N/A	
☐ EXAMINATION FEE (37 CFR 1.16(o), (p), or (q))	N/A	N/A	N/A			N/A	
TOTAL CLAIMS (37 CFR 1.16(i))	minus 20 =	*	X $ =		OR	X $ =	
INDEPENDENT CLAIMS (37 CFR 1.16(h))	minus 3 =	*	X $ =			X $ =	
☐ APPLICATION SIZE FEE (37 CFR 1.16(s))	If the specification and drawings exceed 100 sheets of paper, the application size fee due is $250 ($125 for small entity) for each additional 50 sheets or fraction thereof. See 35 U.S.C. 41(a)(1)(G) and 37 CFR 1.16(s).						
☐ MULTIPLE DEPENDENT CLAIM PRESENT (37 CFR 1.16(j))							
* If the difference in column 1 is less than zero, enter "0" in column 2.			TOTAL			TOTAL	

APPLICATION AS AMENDED – PART II

AMENDMENT 06/13/2012	(Column 1) CLAIMS REMAINING AFTER AMENDMENT		(Column 2) HIGHEST NUMBER PREVIOUSLY PAID FOR	(Column 3) PRESENT EXTRA	SMALL ENTITY RATE ($)	SMALL ENTITY ADDITIONAL FEE ($)	OR	OTHER THAN SMALL ENTITY RATE ($)	OTHER THAN SMALL ENTITY ADDITIONAL FEE ($)
Total (37 CFR 1.16(i))	* 20	Minus	** 20	= 0	X $ =		OR	X $60=	0
Independent (37 CFR 1.16(h))	* 3	Minus	***3	= 0	X $ =		OR	X $250=	0
☐ Application Size Fee (37 CFR 1.16(s))									
☐ FIRST PRESENTATION OF MULTIPLE DEPENDENT CLAIM (37 CFR 1.16(j))							OR		
					TOTAL ADD'L FEE		OR	TOTAL ADD'L FEE	0

AMENDMENT	(Column 1) CLAIMS REMAINING AFTER AMENDMENT		(Column 2) HIGHEST NUMBER PREVIOUSLY PAID FOR	(Column 3) PRESENT EXTRA	RATE ($)	ADDITIONAL FEE ($)	OR	RATE ($)	ADDITIONAL FEE ($)
Total (37 CFR 1.16(i))	*	Minus	**	=	X $ =		OR	X $ =	
Independent (37 CFR 1.16(h))	*	Minus	***	=	X $ =		OR	X $ =	
☐ Application Size Fee (37 CFR 1.16(s))									
☐ FIRST PRESENTATION OF MULTIPLE DEPENDENT CLAIM (37 CFR 1.16(j))							OR		
					TOTAL ADD'L FEE		OR	TOTAL ADD'L FEE	

* If the entry in column 1 is less than the entry in column 2, write "0" in column 3.

** If the "Highest Number Previously Paid For" IN THIS SPACE is less than 20, enter "20".

*** If the "Highest Number Previously Paid For" IN THIS SPACE is less than 3, enter "3".

The "Highest Number Previously Paid For" (Total or Independent) is the highest number found in the appropriate box in column 1.

Legal Instrument Examiner:
/PAMELA ROGERS/

This collection of information is required by 37 CFR 1.16. The information is required to obtain or retain a benefit by the public which is to file (and by the USPTO to process) an application. Confidentiality is governed by 35 U.S.C. 122 and 37 CFR 1.14. This collection is estimated to take 12 minutes to complete, including gathering, preparing, and submitting the completed application form to the USPTO. Time will vary depending upon the individual case. Any comments on the amount of time you require to complete this form and/or suggestions for reducing this burden, should be sent to the Chief Information Officer, U.S. Patent and Trademark Office, U.S. Department of Commerce, P.O. Box 1450, Alexandria, VA 22313-1450. DO NOT SEND FEES OR COMPLETED FORMS TO THIS ADDRESS. **SEND TO: Commissioner for Patents, P.O. Box 1450, Alexandria, VA 22313-1450.**

If you need assistance in completing the form, call 1-800-PTO-9199 and select option 2.

PATENT APPLICATION FEE DETERMINATION RECORD

Substitute for Form PTO-875

Application or Docket Number
13/495,577

APPLICATION AS FILED - PART I

FOR	(Column 1) NUMBER FILED	(Column 2) NUMBER EXTRA	SMALL ENTITY RATE($)	SMALL ENTITY FEE($)	OR	OTHER THAN SMALL ENTITY RATE($)	OTHER THAN SMALL ENTITY FEE($)
BASIC FEE (37 CFR 1.16(a), (b), or (c))	N/A	N/A	N/A			N/A	380
SEARCH FEE (37 CFR 1.16(k), (i), or (m))	N/A	N/A	N/A			N/A	620
EXAMINATION FEE (37 CFR 1.16(o), (p), or (q))	N/A	N/A	N/A			N/A	250
TOTAL CLAIMS (37 CFR 1.16(i))	20 minus 20 =	*			OR	x 60 =	0.00
INDEPENDENT CLAIMS (37 CFR 1.16(h))	3 minus 3 =	*				x 250 =	0.00
APPLICATION SIZE FEE (37 CFR 1.16(s))	If the specification and drawings exceed 100 sheets of paper, the application size fee due is $310 ($155 for small entity) for each additional 50 sheets or fraction thereof. See 35 U.S.C. 41(a)(1)(G) and 37 CFR 1.16(s).						0.00
MULTIPLE DEPENDENT CLAIM PRESENT (37 CFR 1.16(j))							0.00
* If the difference in column 1 is less than zero, enter "0" in column 2.			TOTAL			TOTAL	1250

APPLICATION AS AMENDED - PART II

		(Column 1) CLAIMS REMAINING AFTER AMENDMENT		(Column 2) HIGHEST NUMBER PREVIOUSLY PAID FOR	(Column 3) PRESENT EXTRA	SMALL ENTITY RATE($)	SMALL ENTITY ADDITIONAL FEE($)	OR	OTHER THAN SMALL ENTITY RATE($)	OTHER THAN SMALL ENTITY ADDITIONAL FEE($)
AMENDMENT A	Total (37 CFR 1.16(i))	*	Minus	**	=	x =		OR	x =	
AMENDMENT A	Independent (37 CFR 1.16(h))	*	Minus	***	=	x =		OR	x =	
AMENDMENT A	Application Size Fee (37 CFR 1.16(s))									
AMENDMENT A	FIRST PRESENTATION OF MULTIPLE DEPENDENT CLAIM (37 CFR 1.16(j))							OR		
						TOTAL ADD'L FEE		OR	TOTAL ADD'L FEE	

		(Column 1) CLAIMS REMAINING AFTER AMENDMENT		(Column 2) HIGHEST NUMBER PREVIOUSLY PAID FOR	(Column 3) PRESENT EXTRA	RATE($)	ADDITIONAL FEE($)	OR	RATE($)	ADDITIONAL FEE($)
AMENDMENT B	Total (37 CFR 1.16(i))	*	Minus	**	=	x =		OR	x =	
AMENDMENT B	Independent (37 CFR 1.16(h))	*	Minus	***	=	x =		OR	x =	
AMENDMENT B	Application Size Fee (37 CFR 1.16(s))									
AMENDMENT B	FIRST PRESENTATION OF MULTIPLE DEPENDENT CLAIM (37 CFR 1.16(j))							OR		
						TOTAL ADD'L FEE		OR	TOTAL ADD'L FEE	

* If the entry in column 1 is less than the entry in column 2, write "0" in column 3.
** If the "Highest Number Previously Paid For" IN THIS SPACE is less than 20, enter "20".
*** If the "Highest Number Previously Paid For" IN THIS SPACE is less than 3, enter "3".
The "Highest Number Previously Paid For" (Total or Independent) is the highest found in the appropriate box in column 1.

UNITED STATES PATENT AND TRADEMARK OFFICE

UNITED STATES DEPARTMENT OF COMMERCE
United States Patent and Trademark Office
Address: COMMISSIONER FOR PATENTS
P.O. Box 1450
Alexandria, Virginia 22313-1450
www.uspto.gov

APPLICATION NUMBER	FILING or 371(c) DATE	GRP ART UNIT	FIL FEE REC'D	ATTY.DOCKET.NO	TOT CLAIMS	IND CLAIMS
13/495,577	06/13/2012		1250	10031.004210	20	3

CONFIRMATION NO. 3380

FILING RECEIPT

74254
Okamoto & Benedicto LLP
P.O. Box 641330
San Jose, CA 95164-1330

OC000000055311676

Date Mailed: 07/13/2012

Receipt is acknowledged of this non-provisional patent application. The application will be taken up for examination in due course. Applicant will be notified as to the results of the examination. Any correspondence concerning the application must include the following identification information: the U.S. APPLICATION NUMBER, FILING DATE, NAME OF APPLICANT, and TITLE OF INVENTION. Fees transmitted by check or draft are subject to collection. Please verify the accuracy of the data presented on this receipt. **If an error is noted on this Filing Receipt, please submit a written request for a Filing Receipt Correction. Please provide a copy of this Filing Receipt with the changes noted thereon. If you received a "Notice to File Missing Parts" for this application, please submit any corrections to this Filing Receipt with your reply to the Notice. When the USPTO processes the reply to the Notice, the USPTO will generate another Filing Receipt incorporating the requested corrections**

Applicant(s)

Peter John COUSINS, Menlo Park, CA;

Power of Attorney: The patent practitioners associated with Customer Number 000074254

Domestic Priority data as claimed by applicant

This application is a DIV of 12/070,742 02/20/2008 PAT 8222516

Foreign Applications (You may be eligible to benefit from the **Patent Prosecution Highway** program at the USPTO. Please see http://www.uspto.gov for more information.)

If Required, Foreign Filing License Granted: 07/11/2012

The country code and number of your priority application, to be used for filing abroad under the Paris Convention, is **US 13/495,577**

Projected Publication Date: Request for Non-Publication Acknowledged

Non-Publication Request: Yes

Early Publication Request: No

Title

FRONT CONTACT SOLAR CELL WITH FORMED EMITTER

Preliminary Class

PROTECTING YOUR INVENTION OUTSIDE THE UNITED STATES

Since the rights granted by a U.S. patent extend only throughout the territory of the United States and have no effect in a foreign country, an inventor who wishes patent protection in another country must apply for a patent in a specific country or in regional patent offices. Applicants may wish to consider the filing of an international application under the Patent Cooperation Treaty (PCT). An international (PCT) application generally has the same effect as a regular national patent application in each PCT-member country. The PCT process **simplifies** the filing of patent applications on the same invention in member countries, but **does not result** in a grant of "an international patent" and does not eliminate the need of applicants to file additional documents and fees in countries where patent protection is desired.

Almost every country has its own patent law, and a person desiring a patent in a particular country must make an application for patent in that country in accordance with its particular laws. Since the laws of many countries differ in various respects from the patent law of the United States, applicants are advised to seek guidance from specific foreign countries to ensure that patent rights are not lost prematurely.

Applicants also are advised that in the case of inventions made in the United States, the Director of the USPTO must issue a license before applicants can apply for a patent in a foreign country. The filing of a U.S. patent application serves as a request for a foreign filing license. The application's filing receipt contains further information and guidance as to the status of applicant's license for foreign filing.

Applicants may wish to consult the USPTO booklet, "General Information Concerning Patents" (specifically, the section entitled "Treaties and Foreign Patents") for more information on timeframes and deadlines for filing foreign patent applications. The guide is available either by contacting the USPTO Contact Center at 800-786-9199, or it can be viewed on the USPTO website at http://www.uspto.gov/web/offices/pac/doc/general/index.html.

For information on preventing theft of your intellectual property (patents, trademarks and copyrights), you may wish to consult the U.S. Government website, http://www.stopfakes.gov. Part of a Department of Commerce initiative, this website includes self-help "toolkits" giving innovators guidance on how to protect intellectual property in specific countries such as China, Korea and Mexico. For questions regarding patent enforcement issues, applicants may call the U.S. Government hotline at 1-866-999-HALT (1-866-999-4158).

LICENSE FOR FOREIGN FILING UNDER

Title 35, United States Code, Section 184

Title 37, Code of Federal Regulations, 5.11 & 5.15

GRANTED

The applicant has been granted a license under 35 U.S.C. 184, if the phrase "IF REQUIRED, FOREIGN FILING LICENSE GRANTED" followed by a date appears on this form. Such licenses are issued in all applications where the conditions for issuance of a license have been met, regardless of whether or not a license may be required as set forth in 37 CFR 5.15. The scope and limitations of this license are set forth in 37 CFR 5.15(a) unless an earlier

license has been issued under 37 CFR 5.15(b). The license is subject to revocation upon written notification. The date indicated is the effective date of the license, unless an earlier license of similar scope has been granted under 37 CFR 5.13 or 5.14.

This license is to be retained by the licensee and may be used at any time on or after the effective date thereof unless it is revoked. This license is automatically transferred to any related applications(s) filed under 37 CFR 1.53(d). This license is not retroactive.

The grant of a license does not in any way lessen the responsibility of a licensee for the security of the subject matter as imposed by any Government contract or the provisions of existing laws relating to espionage and the national security or the export of technical data. Licensees should apprise themselves of current regulations especially with respect to certain countries, of other agencies, particularly the Office of Defense Trade Controls, Department of State (with respect to Arms, Munitions and Implements of War (22 CFR 121-128)); the Bureau of Industry and Security, Department of Commerce (15 CFR parts 730-774); the Office of Foreign AssetsControl, Department of Treasury (31 CFR Parts 500+) and the Department of Energy.

NOT GRANTED

No license under 35 U.S.C. 184 has been granted at this time, if the phrase "IF REQUIRED, FOREIGN FILING LICENSE GRANTED" DOES NOT appear on this form. Applicant may still petition for a license under 37 CFR 5.12, if a license is desired before the expiration of 6 months from the filing date of the application. If 6 months has lapsed from the filing date of this application and the licensee has not received any indication of a secrecy order under 35 U.S.C. 181, the licensee may foreign file the application pursuant to 37 CFR 5.15(b).

SelectUSA

The United States represents the largest, most dynamic marketplace in the world and is an unparalleled location for business investment, innovation and commercialization of new technologies. The USA offers tremendous resources and advantages for those who invest and manufacture goods here. Through SelectUSA, our nation works to encourage, facilitate, and accelerate business investment. To learn more about why the USA is the best country in the world to develop technology, manufacture products, and grow your business, visit SelectUSA.gov.

UNITED STATES PATENT AND TRADEMARK OFFICE

UNITED STATES DEPARTMENT OF COMMERCE
United States Patent and Trademark Office
Address: COMMISSIONER FOR PATENTS
P.O. Box 1450
Alexandria, Virginia 22313-1450
www.uspto.gov

APPLICATION NUMBER	FILING OR 371(C) DATE	FIRST NAMED APPLICANT	ATTY. DOCKET NO./TITLE
13/495,577	06/13/2012	Peter John COUSINS	10031.004210

CONFIRMATION NO. 3380

POA ACCEPTANCE LETTER

74254
Okamoto & Benedicto LLP
P.O. Box 641330
San Jose, CA 95164-1330

OC000000055311690

Date Mailed: 07/13/2012

NOTICE OF ACCEPTANCE OF POWER OF ATTORNEY

This is in response to the Power of Attorney filed 06/13/2012.

The Power of Attorney in this application is accepted. Correspondence in this application will be mailed to the above address as provided by 37 CFR 1.33.

/ccetin/

Office of Data Management, Application Assistance Unit (571) 272-4000, or (571) 272-4200, or 1-888-786-0101

PTO/SB/08a (01-10)
Approved for use through 07/31/2012. OMB 0651-0031
U.S. Patent and Trademark Office; U.S. DEPARTMENT OF COMMERCE
Under the Paperwork Reduction Act of 1995, no persons are required to respond to a collection of information unless it contains a valid OMB control number.

INFORMATION DISCLOSURE STATEMENT BY APPLICANT

(Not for submission under 37 CFR 1.99)

Application Number	13495577
Filing Date	2012-06-13
First Named Inventor	Peter John Cousins
Art Unit	
Examiner Name	
Attorney Docket Number	10031.004210

U.S.PATENTS						Remove
Examiner Initial*	Cite No	Patent Number	Kind Code[1]	Issue Date	Name of Patentee or Applicant of cited Document	Pages,Columns,Lines where Relevant Passages or Relevant Figures Appear
	1	3961997		1976-06-08	Chu	
	2	4427839		1984-01-24	Hall	
	3	4665277		1987-05-12	Sah, et al.	
	4	4927770		1990-05-22	Swanson	
	5	5030295		1991-07-09	Swanson, et al.	
	6	5053083		1991-10-01	Sinton	
	7	5057439		1991-10-15	Swanson	
	8	5164019		1992-11-17	Sinton	

INFORMATION DISCLOSURE STATEMENT BY APPLICANT (Not for submission under 37 CFR 1.99)	Application Number	13495577
	Filing Date	2012-06-13
	First Named Inventor	Peter John Cousins
	Art Unit	
	Examiner Name	
	Attorney Docket Number	10031.004210

	9	5217539		1993-06-08	Fraas, et al.	
	10	5266125		1993-11-30	Rand, et al.	
	11	5360990		1994-11-01	Swanson	
	12	5369291		1994-11-29	Swanson	
	13	5449626		1995-09-12	Hezel	
	14	5479018		1995-12-26	McKee, et al.	
	15	5620904		1997-04-15	Hanoka	
	16	5641362		1997-06-24	Meier	
	17	5693578		1997-12-02	Nakanishi, et al.	
	18	6262359		2001-07-17	Meier, et al.	
	19	6274402		2001-08-14	Verlinden, et al.	

INFORMATION DISCLOSURE STATEMENT BY APPLICANT (Not for submission under 37 CFR 1.99)	Application Number	13495577
	Filing Date	2012-06-13
	First Named Inventor	Peter John Cousins
	Art Unit	
	Examiner Name	
	Attorney Docket Number	10031.004210

	20	6313395		2001-11-06	Crane, et al.	
	21	6333457		2001-12-25	Mulligan, et al.	
	22	6337283		2002-01-08	Verlinden, et al.	
	23	6387726		2002-05-14	Verlinden, et al.	
	24	6423568		2002-07-23	Verlinden, et al.	
	25	6524880		2003-02-25	Moon, et al.	
	26	6638788		2003-10-28	Emoto, et al.	
	27	6998288		2006-02-14	Smith, et al.	
	28	7135350		2006-11-14	Smith, et al.	
	29	7468485		2008-12-23	Swanson	
	30	8207444		2012-06-26	Cousins	

INFORMATION DISCLOSURE STATEMENT BY APPLICANT (Not for submission under 37 CFR 1.99)		
	Application Number	13495577
	Filing Date	2012-06-13
	First Named Inventor	Peter John Cousins
	Art Unit	
	Examiner Name	
	Attorney Docket Number	10031.004210

	31	8222516		2012-07-17	Cousins	

If you wish to add additional U.S. Patent citation information please click the Add button. Add

U.S.PATENT APPLICATION PUBLICATIONS Remove

Examiner Initial*	Cite No	Publication Number	Kind Code[1]	Publication Date	Name of Patentee or Applicant of cited Document	Pages,Columns,Lines where Relevant Passages or Relevant Figures Appear
	1	20030134469		2003-07-17	Horzel, et al.	
	2	20040200520		2004-10-14	Mulligan, et al.	
	3	20050016585		2005-01-27	Munzer	
	4	20050268963		2005-12-08	Jordan, et al.	
	5	20060130891		2006-06-22	Carlson, et al.	
	6	20060157103		2006-07-20	Sheats, et al.	
	7	20060096635		2006-05-11	Tuttle	
	8	20060185716		2006-08-24	Murozomo, et al.	

INFORMATION DISCLOSURE STATEMENT BY APPLICANT (Not for submission under 37 CFR 1.99)	Application Number	13495577
	Filing Date	2012-06-13
	First Named Inventor	Peter John Cousins
	Art Unit	
	Examiner Name	
	Attorney Docket Number	10031.004210

	9	20070082206		2007-04-12	Hartig	
	10	20070023081		2007-02-01	Johnson, et al.	
	11	20080078444		2008-04-03	Atanackovic	
	12	20080173347		2008-07-24	Korevaar, et al.	
	13	20090159111		2009-06-25	Jawarani, et al.	
	14	20110114171		2011-05-19	Meier, et al.	

If you wish to add additional U.S. Published Application citation information please click the Add button. Add

FOREIGN PATENT DOCUMENTS Remove

Examiner Initial*	Cite No	Foreign Document Number[3]	Country Code[2] ¡	Kind Code[4]	Publication Date	Name of Patentee or Applicant of cited Document	Pages,Columns,Lines where Relevant Passages or Relevant Figures Appear	T[5]
	1	WO 2008/004791	WO		2008-01-10	LG ELECTRONICS INC.		☐

If you wish to add additional Foreign Patent Document citation information please click the Add button Add

NON-PATENT LITERATURE DOCUMENTS Remove

Examiner Initials*	Cite No	Include name of the author (in CAPITAL LETTERS), title of the article (when appropriate), title of the item (book, magazine, journal, serial, symposium, catalog, etc), date, pages(s), volume-issue number(s), publisher, city and/or country where published.	T[5]

INFORMATION DISCLOSURE STATEMENT BY APPLICANT (Not for submission under 37 CFR 1.99)	Application Number	13495577
	Filing Date	2012-06-13
	First Named Inventor	Peter John Cousins
	Art Unit	
	Examiner Name	
	Attorney Docket Number	10031.004210

	1		☐

If you wish to add additional non-patent literature document citation information please click the Add button Add

EXAMINER SIGNATURE

Examiner Signature		Date Considered	

*EXAMINER: Initial if reference considered, whether or not citation is in conformance with MPEP 609. Draw line through a citation if not in conformance and not considered. Include copy of this form with next communication to applicant.

[1] See Kind Codes of USPTO Patent Documents at www.USPTO.GOV or MPEP 901.04. [2] Enter office that issued the document, by the two-letter code (WIPO Standard ST.3). [3] For Japanese patent documents, the indication of the year of the reign of the Emperor must precede the serial number of the patent document. [4] Kind of document by the appropriate symbols as indicated on the document under WIPO Standard ST.16 if possible. [5] Applicant is to place a check mark here if English language translation is attached.

INFORMATION DISCLOSURE STATEMENT BY APPLICANT (Not for submission under 37 CFR 1.99)	Application Number	13495577
	Filing Date	2012-06-13
	First Named Inventor	Peter John Cousins
	Art Unit	
	Examiner Name	
	Attorney Docket Number	10031.004210

CERTIFICATION STATEMENT

Please see 37 CFR 1.97 and 1.98 to make the appropriate selection(s):

☐ That each item of information contained in the information disclosure statement was first cited in any communication from a foreign patent office in a counterpart foreign application not more than three months prior to the filing of the information disclosure statement. See 37 CFR 1.97(e)(1).

OR

☐ That no item of information contained in the information disclosure statement was cited in a communication from a foreign patent office in a counterpart foreign application, and, to the knowledge of the person signing the certification after making reasonable inquiry, no item of information contained in the information disclosure statement was known to any individual designated in 37 CFR 1.56(c) more than three months prior to the filing of the information disclosure statement. See 37 CFR 1.97(e)(2).

☐ See attached certification statement.

☐ The fee set forth in 37 CFR 1.17 (p) has been submitted herewith.

☒ A certification statement is not submitted herewith.

SIGNATURE

A signature of the applicant or representative is required in accordance with CFR 1.33, 10.18. Please see CFR 1.4(d) for the form of the signature.

Signature	/Patrick D. Benedicto, Reg. No. 40,909/	Date (YYYY-MM-DD)	2012-09-07
Name/Print	PATRICK D. BENEDICTO	Registration Number	40909

This collection of information is required by 37 CFR 1.97 and 1.98. The information is required to obtain or retain a benefit by the public which is to file (and by the USPTO to process) an application. Confidentiality is governed by 35 U.S.C. 122 and 37 CFR 1.14. This collection is estimated to take 1 hour to complete, including gathering, preparing and submitting the completed application form to the USPTO. Time will vary depending upon the individual case. Any comments on the amount of time you require to complete this form and/or suggestions for reducing this burden, should be sent to the Chief Information Officer, U.S. Patent and Trademark Office, U.S. Department of Commerce, P.O. Box 1450, Alexandria, VA 22313-1450. DO NOT SEND FEES OR COMPLETED FORMS TO THIS ADDRESS. **SEND TO: Commissioner for Patents, P.O. Box 1450, Alexandria, VA 22313-1450.**

Privacy Act Statement

The Privacy Act of 1974 (P.L. 93-579) requires that you be given certain information in connection with your submission of the attached form related to a patent application or patent. Accordingly, pursuant to the requirements of the Act, please be advised that: (1) the general authority for the collection of this information is 35 U.S.C. 2(b)(2); (2) furnishing of the information solicited is voluntary; and (3) the principal purpose for which the information is used by the U.S. Patent and Trademark Office is to process and/or examine your submission related to a patent application or patent. If you do not furnish the requested information, the U.S. Patent and Trademark Office may not be able to process and/or examine your submission, which may result in termination of proceedings or abandonment of the application or expiration of the patent.

The information provided by you in this form will be subject to the following routine uses:

1. The information on this form will be treated confidentially to the extent allowed under the Freedom of Information Act (5 U.S.C. 552) and the Privacy Act (5 U.S.C. 552a). Records from this system of records may be disclosed to the Department of Justice to determine whether the Freedom of Information Act requires disclosure of these record s.

2. A record from this system of records may be disclosed, as a routine use, in the course of presenting evidence to a court, magistrate, or administrative tribunal, including disclosures to opposing counsel in the course of settlement negotiations.

3. A record in this system of records may be disclosed, as a routine use, to a Member of Congress submitting a request involving an individual, to whom the record pertains, when the individual has requested assistance from the Member with respect to the subject matter of the record.

4. A record in this system of records may be disclosed, as a routine use, to a contractor of the Agency having need for the information in order to perform a contract. Recipients of information shall be required to comply with the requirements of the Privacy Act of 1974, as amended, pursuant to 5 U.S.C. 552a(m).

5. A record related to an International Application filed under the Patent Cooperation Treaty in this system of records may be disclosed, as a routine use, to the International Bureau of the World Intellectual Property Organization, pursuant to the Patent Cooperation Treaty.

6. A record in this system of records may be disclosed, as a routine use, to another federal agency for purposes of National Security review (35 U.S.C. 181) and for review pursuant to the Atomic Energy Act (42 U.S.C. 218(c)).

7. A record from this system of records may be disclosed, as a routine use, to the Administrator, General Services, or his/her designee, during an inspection of records conducted by GSA as part of that agency's responsibility to recommend improvements in records management practices and programs, under authority of 44 U.S.C. 2904 and 2906. Such disclosure shall be made in accordance with the GSA regulations governing inspection of records for this purpose, and any other relevant (i.e., GSA or Commerce) directive. Such disclosure shall not be used to make determinations about individuals.

8. A record from this system of records may be disclosed, as a routine use, to the public after either publication of the application pursuant to 35 U.S.C. 122(b) or issuance of a patent pursuant to 35 U.S.C. 151. Further, a record may be disclosed, subject to the limitations of 37 CFR 1.14, as a routine use, to the public if the record was filed in an application which became abandoned or in which the proceedings were terminated and which application is referenced by either a published application, an application open to public inspections or an issued patent.

9. A record from this system of records may be disclosed, as a routine use, to a Federal, State, or local law enforcement agency, if the USPTO becomes aware of a violation or potential violation of law or regulation.

Electronic Acknowledgement Receipt

EFS ID:	13685893
Application Number:	13495577
International Application Number:	
Confirmation Number:	3380
Title of Invention:	FRONT CONTACT SOLAR CELL WITH FORMED EMITTER
First Named Inventor/Applicant Name:	Peter John COUSINS
Customer Number:	74254
Filer:	Patrick D. Benedicto/jina mangaoang
Filer Authorized By:	Patrick D. Benedicto
Attorney Docket Number:	10031.004210
Receipt Date:	07-SEP-2012
Filing Date:	13-JUN-2012
Time Stamp:	14:47:05
Application Type:	Utility under 35 USC 111(a)

Payment information:

Submitted with Payment	no

File Listing:

Document Number	Document Description	File Name	File Size(Bytes)/ Message Digest	Multi Part /.zip	Pages (if appl.)
1	Information Disclosure Statement (IDS) Form (SB08)	IDS-sb08a.pdf	613898 9520ae9189ce9fca353d96a8a5f4586045f8e9c5	no	8

Warnings:

Information:

2	Foreign Reference	FR_WO2008004791A1.pdf	312226 1a97ad2091505605f11683f26e6d69e0a5008f36	no	23

Warnings:

Information:

Total Files Size (in bytes):	926124

This Acknowledgement Receipt evidences receipt on the noted date by the USPTO of the indicated documents, characterized by the applicant, and including page counts, where applicable. It serves as evidence of receipt similar to a Post Card, as described in MPEP 503.

<u>New Applications Under 35 U.S.C. 111</u>
If a new application is being filed and the application includes the necessary components for a filing date (see 37 CFR 1.53(b)-(d) and MPEP 506), a Filing Receipt (37 CFR 1.54) will be issued in due course and the date shown on this Acknowledgement Receipt will establish the filing date of the application.

<u>National Stage of an International Application under 35 U.S.C. 371</u>
If a timely submission to enter the national stage of an international application is compliant with the conditions of 35 U.S.C. 371 and other applicable requirements a Form PCT/DO/EO/903 indicating acceptance of the application as a national stage submission under 35 U.S.C. 371 will be issued in addition to the Filing Receipt, in due course.

<u>New International Application Filed with the USPTO as a Receiving Office</u>
If a new international application is being filed and the international application includes the necessary components for an international filing date (see PCT Article 11 and MPEP 1810), a Notification of the International Application Number and of the International Filing Date (Form PCT/RO/105) will be issued in due course, subject to prescriptions concerning national security, and the date shown on this Acknowledgement Receipt will establish the international filing date of the application.

UNITED STATES PATENT AND TRADEMARK OFFICE

UNITED STATES DEPARTMENT OF COMMERCE
United States Patent and Trademark Office
Address: COMMISSIONER FOR PATENTS
P.O. Box 1450
Alexandria, Virginia 22313-1450
www.uspto.gov

APPLICATION NO.	FILING DATE	FIRST NAMED INVENTOR	ATTORNEY DOCKET NO.	CONFIRMATION NO.
13/495,577	06/13/2012	Peter John COUSINS	10031.004210	3380

74254 7590 09/16/2013
Okamoto & Benedicto LLP
P.O. Box 641330
San Jose, CA 95164-1330

EXAMINER
PILLAY, DEVINA

ART UNIT	PAPER NUMBER
1755	

MAIL DATE	DELIVERY MODE
09/16/2013	PAPER

Please find below and/or attached an Office communication concerning this application or proceeding.

The time period for reply, if any, is set in the attached communication.

Notice of References Cited	Application/Control No. 13/495,577	Applicant(s)/Patent Under Reexamination COUSINS, PETER JOHN	
	Examiner DEVINA PILLAY	Art Unit 1755	Page 1 of 1

U.S. PATENT DOCUMENTS

*		Document Number Country Code-Number-Kind Code	Date MM-YYYY	Name	Classification
*	A	US-6,262,359	07-2001	Meier et al.	136/256
*	B	US-2005/0268963	12-2005	Jordan et al.	136/256
*	C	US-2002/0153039	10-2002	Moon et al.	136/256
*	D	US-6,998,288	02-2006	Smith et al.	438/48
*	E	US-7,468,485	12-2008	Swanson, Richard M.	136/243
*	F	US-7,633,006	12-2009	Swanson, Richard M.	136/258
*	G	US-8,207,444	06-2012	Cousins, Peter John	136/258
	H	US-			
	I	US-			
	J	US-			
	K	US-			
	L	US-			
	M	US-			

FOREIGN PATENT DOCUMENTS

*		Document Number Country Code-Number-Kind Code	Date MM-YYYY	Country	Name	Classification
	N					
	O					
	P					
	Q					
	R					
	S					
	T					

NON-PATENT DOCUMENTS

*		Include as applicable: Author, Title Date, Publisher, Edition or Volume, Pertinent Pages)
	U	Lindholm, "Heavily doped Polysilicon-Contact Solar Cells", IEEE Electron Device Letters, Vol. EDL-6, No. 7, pgs. 363-365, July 1985
	V	
	W	
	X	

*A copy of this reference is not being furnished with this Office action. (See MPEP § 707.05(a).)
Dates in MM-YYYY format are publication dates. Classifications may be US or foreign.

First Action Interview Pilot Program Pre-Interview Communication	Application No. 13/495,577	Applicant(s) COUSINS, PETER JOHN	
	Examiner DEVINA PILLAY	Art Unit 1755	AIA (First Inventor to File) Status No

-The MAILING OR NOTIFICATION DATE of this communication appears on the cover sheet with the correspondence address -

THE SHORTENED STATUTORY PERIOD FOR REPLY IS SET TO EXPIRE **ONE MONTH OR THIRTY (30) DAYS,** WHICHEVER IS LONGER, FROM THE MAILING OR NOTIFICATION DATE OF THIS COMMUNICATION.

This time period for reply is extendable under 37 CFR 1.136(a) for only ONE additional MONTH.

This communication constitutes notice under 37 CFR 1.136(a)(1)(i).

Applicant must, within the time period for reply, file: (1) A letter requesting not to have a first action interview; (2) A reply under 37 CFR 1.111 waiving the first action interview and First Action Interview Office Action; or (3) An Applicant Initiated Interview Request Form (PTOL-413A) electronically via EFS-Web, accompanied by a proposed amendment or arguments, and schedule the interview within 2 months from the filing of the request. A failure to respond to this communication will be treated as a request not to have an interview. If applicant waives the First Action Interview Office Action, the instant Pre-Interview Communication is deemed the first Office Action on the Merits. The next subsequent Office action may be made final if appropriate. See MPEP 706.07(a).

Status

1)☒ Responsive to communication(s) filed on *06/13/2012*.

☐ A declaration(s)/affidavit(s) under **37 CFR 1.130(b)** was/were filed on _____.

Disposition of Claims

2)☒ Claim(s) *9-16 and 21-32* is/are pending in the application.

2a) Of the above claim(s) _____ is/are withdrawn from consideration.

3)☐ Claim(s) _____ is/are allowed.

4)☒ Claim(s) ***9-16 and 21-32*** is/are rejected.

5)☐ Claim(s) _____ is/are objected to.

6)☐ Claim(s) _____ are subject to restriction and/or election requirement.

Application Papers

7)☐ The specification is objected to by the Examiner.

8)☐ The drawing(s) filed on _____ is/are: a)☐ accepted or b)☐ objected to by the Examiner.

Applicant may not request that any objection to the drawing(s) be held in abeyance. See 37 CFR 1.85(a).
Replacement drawing sheet(s) including the correction is required if the drawing(s) is objected to. See 37 CFR 1.121(d).

Priority under 35 U.S.C. § 119

9)☐ Acknowledgment is made of a claim for foreign priority under 35 U.S.C. § 119(a)-(d) or (f).

a)☐ All b)☐ Some * c)☐ None of:

1.☐ Certified copies of the priority documents have been received.

2.☐ Certified copies of the priority documents have been received in Application No. _____.

3.☐ Copies of the certified copies of the priority documents have been received in this National Stage application from the International Bureau (PCT Rule 17.2(a)).

*See the attached detailed Office action for a list of the certified copies not received.

Contact Information

Examiner's Telephone Number: (571)270-1180

Examiner's Typical Work Schedule: Monday thru Friday 7:30am -5:00pm (EST). Examiner Fax Number is (571)-270-2180

Supervisor's Name: Jonathan J. Johnson

Supervisor's Telephone Number: 571-272-1177

Attachment(s)

1) ☒Notice of References Cited (PTO-892)

2) ☐Information Disclosure Statement(s) (PTO/SB/08) Paper No(s)/Mail Date _____.

3) ☐Interview Summary (PTO-413) Paper No(s)/Mail Date. _____ .

4) ☐ Other: _____.

First Action Interview Pilot Program Pre-Interview Communication	Application No. 13/495,577	Applicant(s) COUSINS, PETER JOHN	
	Examiner DEVINA PILLAY	Art Unit 1755	AIA (First Inventor to File) Status No

Notification of Rejection(s) and/or Objection(s)

#	Claim(s)	Reference(s) (if applicable)	Rejection Statutory Basis	Brief Explanation of Rejection
1	9,11,15,21, 22,24,27,29 , 30, 32	A, U	103 (a)	Claims 9 and 21 (Figs. 2-7) [0023].A uses aluminum back contact, aluminum A does not disclose a polysilicon emitter and instead discloses that the emitter is formed by diffusing aluminum into silicon substrate (22, see Fig. 3c and 35) C6/L55-C7/10.(See Cont)
	13, 26 and 31	A, U, B	103 (a)	A discloses an ARC layer, but does not disclose texturing. B discloses texturing [0022] to improve light absorption.
2	10, 12, 23 and 25	A, U, C	103 (a)	A discloses aluminum for the p-type dopant and a phsophorus printed layer for the n-type dopant (C5/L50-65). (See Cont.)
3	9-16 and 21-32	D, U		D discloses (see Figs. 1-7) forming an oxide over a back surface (edges) of a silicon substrate (102) and discloses additional layers (104) which form emitter layers (C3/L55-C4/L5) and a capping layer.
	9-16 and 21-32	E, F, G	Double Patenting	The structure disclosed in claims 9-16 and 21-32 are substantially recited by references E, F and G.

Expanded Discussion/Commentary

1		Lindholm discloses a heavily doped polysilicon emitter layer and discloses that it reduces recombination velocity of minority carriers. It would have been obvious to use the polysilicon emitter instead of the doped homojunction region.
2		Moon discloses BSG and PSG can be used as p and n-type dopants, respectively [0028]. It would have been obvious to modify the dopants of A in view of C because it is known to use BSG and PSG and p and n-type dopants, respectively in the solar cell art.
3		D discloses ARC layer (C4/L1-10) Lindholm discloses a heavily doped polysilicon emitter layer and discloses that it reduces recombination velocity of minority carriers. It would have been obvious to use the polysilicon emitter instead of the doped homojunction region.

DATE: 12 September, 2013	/Devina Pillay/ Examiner, Art Unit 1755	

Notice of References Cited	Application/Control No. 13/495,577	Applicant(s)/Patent Under Reexamination COUSINS, PETER JOHN	
	Examiner DEVINA PILLAY	Art Unit 1755	Page 1 of 1

U.S. PATENT DOCUMENTS

*		Document Number Country Code-Number-Kind Code	Date MM-YYYY	Name	Classification
*	A	US-6,262,359	07-2001	Meier et al.	136/256
*	B	US-2005/0268963	12-2005	Jordan et al.	136/256
*	C	US-2002/0153039	10-2002	Moon et al.	136/256
*	D	US-6,998,288	02-2006	Smith et al.	438/48
*	E	US-7,468,485	12-2008	Swanson, Richard M.	136/243
*	F	US-7,633,006	12-2009	Swanson, Richard M.	136/258
*	G	US-8,207,444	06-2012	Cousins, Peter John	136/258
	H	US-			
	I	US-			
	J	US-			
	K	US-			
	L	US-			
	M	US-			

FOREIGN PATENT DOCUMENTS

*		Document Number Country Code-Number-Kind Code	Date MM-YYYY	Country	Name	Classification
	N					
	O					
	P					
	Q					
	R					
	S					
	T					

NON-PATENT DOCUMENTS

*		Include as applicable: Author, Title Date, Publisher, Edition or Volume, Pertinent Pages)
	U	Lindholm, "Heavily doped Polysilicon-Contact Solar Cells", IEEE Electron Device Letters, Vol. EDL-6, No. 7, pgs. 363-365, July 1985
	V	
	W	
	X	

*A copy of this reference is not being furnished with this Office action. (See MPEP § 707.05(a).)
Dates in MM-YYYY format are publication dates. Classifications may be US or foreign.

EAST Search History

EAST Search History (Prior Art)

Ref #	Hits	Search Query	DBs	Default Operator	Plurals	Time Stamp
S1	2	"20030134469"	US-PGPUB; USPAT; USOCR; FPRS; EPO; JPO; DERWENT; IBM_TDB	OR	ON	2009/12/07 11:43
S2	4	("2003/0134469").URPN.	USPAT	OR	ON	2009/12/07 11:56
S4	1	"10/353261"	USPAT	OR	ON	2009/12/07 11:57
S3	0	"10353261"	USPAT	OR	ON	2009/12/07 11:57
S6	39	(back near surface near field) and texture and dielectric	US-PGPUB; USPAT; USOCR	OR	ON	2009/12/07 11:58
S5	19	("2999240" | "4001864" | "4104091" | "4133698" | "4142200" | "4152824" | "4156822" | "4201798" | "4377901" | "4478879" | "5013396" | "5543333" | "6096968" | "6136673" | "6146483" | "6206996" | "6278053").PN. OR ("6825104").URPN.	US-PGPUB; USPAT; USOCR	OR	ON	2009/12/07 11:58
S8	18	(back near surface near field) and texture and dielectric and anti near reflective	US-PGPUB; USPAT; USOCR; FPRS; EPO; JPO; DERWENT; IBM_TDB	OR	ON	2009/12/07 12:06
S7	18	(back near surface near field) and texture and dielectric and anti near reflective	US-PGPUB; USPAT; USOCR	OR	ON	2009/12/07 12:06
S10	65	texture and antireflective and emitter	US-PGPUB; USPAT; USOCR	OR	ON	2009/12/07 12:09
S9	10	(back near surface near field) and texture and antireflective and emitter	US-PGPUB; USPAT; USOCR	OR	ON	2009/12/07 12:09
S11	66	texture and antireflective and emitter	US-PGPUB; USPAT; USOCR; FPRS; EPO; JPO; DERWENT; IBM_TDB	OR	ON	2009/12/07 12:10
S13	54	S12 not S11	US-PGPUB; USPAT; USOCR;	OR	ON	2009/12/07 12:11

			FPRS; EPO; JPO; DERWENT; IBM_TDB			
S12	120	textur$4 and antireflective and emitter	US-PGPUB; USPAT; USOCR; FPRS; EPO; JPO; DERWENT; IBM_TDB	OR	ON	2009/12/07 12:11
S14	18	S13 and dielectric	US-PGPUB; USPAT; USOCR; FPRS; EPO; JPO; DERWENT; IBM_TDB	OR	ON	2009/12/07 12:12
S16	443	dielectric and antireflective and emitter	US-PGPUB; USPAT; USOCR; FPRS; EPO; JPO; DERWENT; IBM_TDB	OR	ON	2009/12/07 12:17
S15	3	"20070082206"	US-PGPUB; USPAT; USOCR; FPRS; EPO; JPO; DERWENT; IBM_TDB	OR	ON	2009/12/07 12:17
S18	192	(back near surface near field) and dielectric	US-PGPUB; USPAT; USOCR	OR	ON	2009/12/07 12:18
S17	132	dielectric and antireflective and emitter and ((solar near cell) (photovoltaic))	US-PGPUB; USPAT; USOCR; FPRS; EPO; JPO; DERWENT; IBM_TDB	OR	ON	2009/12/07 12:18
S19	1	"20030134469"	US-PGPUB; USPAT; USOCR	OR	ON	2009/12/07 12:28
S20	19	("3413157" | "4012235" | "4239810" | "4313768" | "4604791" | "4624045" | "4633031" | "4781766" | "4836861" | "4910153" | "5879977" | "6111191").PN. OR ("6210991").URPN.	US-PGPUB; USPAT; USOCR	OR	ON	2009/12/07 12:51
S21	2	"20060196535"	US-PGPUB; USPAT; USOCR	OR	ON	2009/12/07 12:55
S22	14	("20030070707" | "4070097" | "4084099" | "4278831" | "4496788" | "5057439" | "5066340" | "5213628" | "5468652" | "5728230" | "6013582" | "6118258" | "6210991" | "6465724").PN. OR ("7554031").URPN.	US-PGPUB; USPAT; USOCR	OR	ON	2009/12/07 13:13
S25	124	S23 and ((solar near cell)	US-PGPUB;	OR	ON	2009/12/07

		(photovoltaic))	USPAT; USOCR; FPRS; EPO; JPO; DERWENT; IBM_TDB			13:17
S24	347	dielectric and (antireflection or anti near reflection or ARC) and emitter and textur$5	US-PGPUB; USPAT; USOCR; FPRS; EPO; JPO; DERWENT; IBM_TDB	OR	ON	2009/12/07 13:17
S23	346	dielectric and (antireflection or anti near reflection or ARC) and emitter and textur$5	US-PGPUB; USPAT; USOCR	OR	ON	2009/12/07 13:17
S26	7	11/263159	US-PGPUB; USPAT; USOCR; FPRS; EPO; JPO; DERWENT; IBM_TDB	OR	ON	2009/12/07 13:50
S27	29	S24 and optoelectronic	US-PGPUB; USPAT; USOCR; FPRS; EPO; JPO; DERWENT; IBM_TDB	OR	ON	2009/12/07 14:08
S30	32	S29 and ((solar near cell) (photovoltaic))	US-PGPUB; USPAT; USOCR; FPRS; EPO; JPO; DERWENT; IBM_TDB	OR	ON	2009/12/07 14:09
S29	133	S28 not S24	US-PGPUB; USPAT; USOCR	OR	ON	2009/12/07 14:09
S28	479	dielectric and (antireflection or anti near reflection or ARC) and (emitter or collector) and textur$5	US-PGPUB; USPAT; USOCR	OR	ON	2009/12/07 14:09
S31	19	("4090213" | "4131486" | "4133698" | "4232245" | "4255211" | "4315097" | "4316049" | "4341918" | "4365262" | "4367368" | "4385198" | "4427839").PN. OR ("4665277").URPN.	US-PGPUB; USPAT; USOCR	OR	ON	2009/12/07 14:32
S32	14	("3150999" | "4227942" | "4348254").PN. OR ("4427839").URPN.	US-PGPUB; USPAT; USOCR	OR	ON	2009/12/07 14:35
S35	215	S34 not (S17)	US-PGPUB; USPAT; USOCR; FPRS; EPO; JPO; DERWENT; IBM_TDB	OR	ON	2009/12/07 14:47
S34	233	S33 and (solar near cell)	US-PGPUB; USPAT;	OR	ON	2009/12/07 14:47

			USOCR; FPRS; EPO; JPO; DERWENT; IBM_TDB			
S33	1092	(antireflection or anti near reflection or ARC) and emitter and textur$5	US-PGPUB; USPAT; USOCR; FPRS; EPO; JPO; DERWENT; IBM_TDB	OR	ON	2009/12/07 14:47
S36	215	S35 not S29	US-PGPUB; USPAT; USOCR; FPRS; EPO; JPO; DERWENT; IBM_TDB	OR	ON	2009/12/07 14:48
S38	2	"20040112426"	US-PGPUB; USPAT; USOCR; FPRS; EPO; JPO; DERWENT; IBM_TDB	OR	ON	2009/12/07 15:08
S37	0	2004/0112426	US-PGPUB; USPAT; USOCR; FPRS; EPO; JPO; DERWENT; IBM_TDB	OR	ON	2009/12/07 15:08
S39	10	("20040200520" | "4234352" | "4478879" | "4920639" | "4927770" | "5053083" | "5320684" | "5538564" | "5641362" | "6624737").PN. OR ("7339110").URPN.	US-PGPUB; USPAT; USOCR	OR	ON	2009/12/07 15:14
S40	88	(back near surface near field) and antireflective and emitter	US-PGPUB; USPAT; USOCR; FPRS; EPO; JPO; DERWENT; IBM_TDB	OR	ON	2009/12/07 15:23
S43	138	S41 not S36	US-PGPUB; USPAT; USOCR; FPRS; EPO; JPO; DERWENT; IBM_TDB	OR	ON	2009/12/07 15:24
S42	87	S41 not S40	US-PGPUB; USPAT; USOCR; FPRS; EPO; JPO; DERWENT; IBM_TDB	OR	ON	2009/12/07 15:24
S41	175	(back near surface near field) and (antireflective ARC (anti near	US-PGPUB; USPAT;	OR	ON	2009/12/07 15:24

		reflective)) and emitter	USOCR; FPRS; EPO; JPO; DERWENT; IBM_TDB			
S44	26	("2841860" | "2854363" | "3134906" | "4070689" | "4341589" | "4428783" | "4523966" | "4665277" | "4703553" | "5156978").PN. OR ("5928438").URPN.	US-PGPUB; USPAT; USOCR	OR	ON	2009/12/07 15:30
S45	19	("4090213" | "4131486" | "4133698" | "4232245" | "4255211" | "4315097" | "4316049" | "4341918" | "4365262" | "4367368" | "4385198" | "4427839").PN. OR ("4665277").URPN.	US-PGPUB; USPAT; USOCR	OR	ON	2009/12/07 16:00
S46	11	("3081370" | "3757123" | "3948682" | "3969746").PN. OR ("4131486").URPN.	US-PGPUB; USPAT; USOCR	OR	ON	2009/12/07 16:02
S47	15	"5258077"	US-PGPUB; USPAT; USOCR; FPRS; EPO; JPO; DERWENT; IBM_TDB	OR	ON	2009/12/07 17:11
S48	14	("3895975" | "4056879" | "4106047" | "4131486" | "4226017" | "4916503" | "5538564" | "5641362" | "5951742" | "5973260" | "6071753").PN. OR ("6262359").URPN.	US-PGPUB; USPAT; USOCR	OR	ON	2009/12/07 17:13
S49	7	(back near junction) and (passiv$4 with "SiO.sub.2")	US-PGPUB; USPAT; USOCR; FPRS; EPO; JPO; DERWENT; IBM_TDB	OR	ON	2009/12/07 18:25
S50	10	(back with surface with field) and (passiv$4 with "SiO.sub.2")	US-PGPUB; USPAT; USOCR; FPRS; EPO; JPO; DERWENT; IBM_TDB	OR	ON	2009/12/07 18:27
S51	15	(passiv$4 with "SiO.sub.2" with emitter)	US-PGPUB; USPAT; USOCR; FPRS; EPO; JPO; DERWENT; IBM_TDB	OR	ON	2009/12/07 18:28
S53	67	(passiv$4 with ("SiO.sub.2" or (silicon near dioxide))) and solar near cell	US-PGPUB; USPAT; USOCR; FPRS; EPO; JPO; DERWENT; IBM_TDB	OR	ON	2009/12/07 18:31
S52	1984	(passiv$4 with ("SiO.sub.2" or (silicon near dioxide)))	US-PGPUB; USPAT; USOCR;	OR	ON	2009/12/07 18:31

			FPRS; EPO; JPO; DERWENT; IBM_TDB			
S54	3	"20070082206"	US-PGPUB; USPAT; USOCR; FPRS; EPO; JPO; DERWENT; IBM_TDB	OR	ON	2009/12/07 18:37
S55	14	("3895975" | "4056879" | "4106047" | "4131486" | "4226017" | "4916503" | "5538564" | "5641362" | "5951742" | "5973260" | "6071753").PN. OR ("6262359").URPN.	US-PGPUB; USPAT; USOCR	OR	ON	2009/12/07 19:00
S56	163	(back near junction) and (solar near cell)	US-PGPUB; USPAT; USOCR; FPRS; EPO; JPO; DERWENT; IBM_TDB	OR	ON	2009/12/07 19:13
S58	39	S57 not S56	US-PGPUB; USPAT; USOCR; FPRS; EPO; JPO; DERWENT; IBM_TDB	OR	ON	2009/12/07 19:29
S57	141	(back near junction) and (photovoltaic)	US-PGPUB; USPAT; USOCR; FPRS; EPO; JPO; DERWENT; IBM_TDB	OR	ON	2009/12/07 19:29
S61	32	S60 and emitter	US-PGPUB; USPAT; USOCR; FPRS; EPO; JPO; DERWENT; IBM_TDB	OR	ON	2009/12/07 19:31
S60	182	S59 not S56	US-PGPUB; USPAT; USOCR; FPRS; EPO; JPO; DERWENT; IBM_TDB	OR	ON	2009/12/07 19:31
S59	345	(back near2 junction) and (solar near cell or (photovoltaic))	US-PGPUB; USPAT; USOCR; FPRS; EPO; JPO; DERWENT; IBM_TDB	OR	ON	2009/12/07 19:31
S62	16	(US-20050268963-$ or US-20020153039-$ or US-20060196535-$ or US-20090101199-$ or US-	US-PGPUB; USPAT; DERWENT	OR	ON	2009/12/07 19:33

		20040097062-$ or US-20040112426-$ or US-20070186970-$).did. or (US-4379944-$ or US-4665277-$ or US-5320684-$ or US-6210991-$ or US-5792280-$ or US-5899704-$ or US-6262359-$ or US-5258077-$).did. or (US-20090205712-$).did.				
S65	16	S64 and (isolation near trench)	US-PGPUB; USPAT; USOCR	OR	ON	2009/12/07 19:34
S64	346	dielectric and (antireflection or anti near reflection or ARC) and emitter and textur$5	US-PGPUB; USPAT; USOCR	OR	ON	2009/12/07 19:34
S63	0	S62 and (isolation near2 trench)	US-PGPUB; USPAT; USOCR; FPRS; EPO; JPO; DERWENT; IBM_TDB	OR	ON	2009/12/07 19:34
S66	251	solar near cell and (isolation near trench)	US-PGPUB; USPAT; USOCR	OR	ON	2009/12/07 19:35
S68	2	S67 and solar near cell	US-PGPUB; USPAT; USOCR; FPRS; EPO; JPO; DERWENT; IBM_TDB	OR	ON	2009/12/07 19:36
S67	232	(back with surface with field) and (isolation near trench)	US-PGPUB; USPAT; USOCR; FPRS; EPO; JPO; DERWENT; IBM_TDB	OR	ON	2009/12/07 19:36
S69	24	(back with surface with field) and (isolation near2 edge) and (solar near cell)	US-PGPUB; USPAT; USOCR; FPRS; EPO; JPO; DERWENT; IBM_TDB	OR	ON	2009/12/07 19:40
S70	49	("20030134469" | "20040200520" | "20040200520" | "20060130891" | "20070082206" | "3961997" | "3961997" | "4927770" | "4927770" | "5030295" | "5053083" | "5057439" | "5164019" | "5217539" | "5360990" | "5369291" | "5641362" | "5030295" | "5053083" | "5057439" | "5164019" | "5217539" | "5266125" | "5360990" | "5369291" | "5641362" | "6274402" | "6313395" | "6333457" | "6387726" | "6423568" | "6998288" | "6998288" | "6274402" | "6313395" | "6333457" | "6337283" | "6387726" | "6423568" | "6524880" | "6998288" | "7135350" | "7135350").PN.	US-PGPUB; USPAT; USOCR; FPRS; EPO; JPO; DERWENT; IBM_TDB	OR	ON	2009/12/07 19:54
S72	32	S71 and ((solar near cell) photovoltaic)	US-PGPUB;	OR	ON	2009/12/07

			USPAT; USOCR; FPRS; EPO; JPO; DERWENT; IBM_TDB			20:00
S71	288	oxide with passiv$5 with emitter	US-PGPUB; USPAT; USOCR; FPRS; EPO; JPO; DERWENT; IBM_TDB	OR	ON	2009/12/07 20:00
S73	29	"4726850"	US-PGPUB; USPAT; USOCR; FPRS; EPO; JPO; DERWENT; IBM_TDB	OR	ON	2009/12/07 20:29
S75	32	(back with surface with field) and (isolat$3 near5 edge) and (solar near cell)	US-PGPUB; USPAT; USOCR; FPRS; EPO; JPO; DERWENT; IBM_TDB	OR	ON	2009/12/07 20:34
S74	0	(back with surface with field) and (isolat$3 near5 edge with trench) and (solar near cell)	US-PGPUB; USPAT; USOCR; FPRS; EPO; JPO; DERWENT; IBM_TDB	OR	ON	2009/12/07 20:34
S76	39	(back with surface with field) and (isolation near5 trench with etch)	US-PGPUB; USPAT; USOCR; FPRS; EPO; JPO; DERWENT; IBM_TDB	OR	ON	2009/12/07 20:40
S77	20	(solar near cell) and (isolation near5 trench with etch)	US-PGPUB; USPAT; USOCR; FPRS; EPO; JPO; DERWENT; IBM_TDB	OR	ON	2009/12/07 20:41
S79	7	(solar near cell) and (isolation near5 trench with edge)	US-PGPUB; USPAT; USOCR; FPRS; EPO; JPO; DERWENT; IBM_TDB	OR	ON	2009/12/07 20:42
S78	304	(solar near cell) and (isolation near5 trench)	US-PGPUB; USPAT; USOCR; FPRS; EPO; JPO; DERWENT;	OR	ON	2009/12/07 20:42

			IBM_TDB			
S80	24	(trench with (electric$4 near isolat$4)) and emitter and (solar near cell)	US-PGPUB; USPAT; USOCR; FPRS; EPO; JPO; DERWENT; IBM_TDB	OR	ON	2009/12/07 20:52
S81	41	(silver near5 ("SiO.sub.2" or silicon near dioxide)) and (solar near cell) and emitter	US-PGPUB; USPAT; USOCR; FPRS; EPO; JPO; DERWENT; IBM_TDB	OR	ON	2009/12/07 21:06
S83	50	((silver or Ag) near5 ("SiO.sub.2" or silicon near dioxide or passiv$4)) and (solar near cell) and emitter	US-PGPUB; USPAT; USOCR; FPRS; EPO; JPO; DERWENT; IBM_TDB	OR	ON	2009/12/07 21:07
S82	42	(silver near5 ("SiO.sub.2" or silicon near dioxide or passiv$4)) and (solar near cell) and emitter	US-PGPUB; USPAT; USOCR; FPRS; EPO; JPO; DERWENT; IBM_TDB	OR	ON	2009/12/07 21:07
S84	44	((silver) near5 ("SiO.sub.2" or silicon near dioxide or passiv$4)) and ((solar near cell) or photovoltaic) and emitter	US-PGPUB; USPAT; USOCR; FPRS; EPO; JPO; DERWENT; IBM_TDB	OR	ON	2009/12/07 21:08
S86	46	S85 not S84	US-PGPUB; USPAT; USOCR; FPRS; EPO; JPO; DERWENT; IBM_TDB	OR	ON	2009/12/07 21:09
S85	90	((silver) near5 ("SiO.sub.2" or silicon near dioxide or passiv$4)) and ((solar near cell) or photovoltaic)	US-PGPUB; USPAT; USOCR; FPRS; EPO; JPO; DERWENT; IBM_TDB	OR	ON	2009/12/07 21:09
S88	15	S87 not S85	US-PGPUB; USPAT; USOCR; FPRS; EPO; JPO; DERWENT; IBM_TDB	OR	ON	2009/12/07 21:12
S87	105	((silver) near5 ("SiO.sub.2" or silicon near dioxide or passiv$4)) and ((solar near cell) or photovoltaic or optoelectronic)	US-PGPUB; USPAT; USOCR; FPRS;	OR	ON	2009/12/07 21:12

			EPO; JPO; DERWENT; IBM_TDB			
S90	240	S89 not S87	US-PGPUB; USPAT; USOCR; FPRS; EPO; JPO; DERWENT; IBM_TDB	OR	ON	2009/12/07 21:13
S89	345	((silver) with ("SiO.sub.2" or silicon near dioxide or passiv$4)) and ((solar near cell) or photovoltaic or optoelectronic)	US-PGPUB; USPAT; USOCR; FPRS; EPO; JPO; DERWENT; IBM_TDB	OR	ON	2009/12/07 21:13
S91	14	("3150999" | "4227942" | "4348254").PN. OR ("4427839").URPN.	US-PGPUB; USPAT; USOCR	OR	ON	2009/12/07 21:17
S95	25	S94 and solar near cell	US-PGPUB; USPAT; USOCR	OR	ON	2009/12/07 21:38
S94	565	silver near5 infrared near5 reflect$4	US-PGPUB; USPAT; USOCR	OR	ON	2009/12/07 21:38
S93	584	silver near5 infrared with reflect$4	US-PGPUB; USPAT; USOCR	OR	ON	2009/12/07 21:38
S92	1122	silver with infrared with reflect$4	US-PGPUB; USPAT; USOCR	OR	ON	2009/12/07 21:38
S96	29	S94 and photovoltaic	US-PGPUB; USPAT; USOCR	OR	ON	2009/12/07 21:41
S97	18	"5479018"	US-PGPUB; USPAT; USOCR	OR	ON	2009/12/07 21:56
S98	1822	dichroic near coating	US-PGPUB; USPAT; USOCR; FPRS; EPO; JPO; DERWENT; IBM_TDB	OR	ON	2009/12/08 10:20
S99	54	dichroic near coating and (powder)	US-PGPUB; USPAT; USOCR; FPRS; EPO; JPO; DERWENT; IBM_TDB	OR	ON	2009/12/08 10:21
S100	296	(fluorescent near powder) and (light near5 film)	US-PGPUB; USPAT; USOCR; FPRS; EPO; JPO; DERWENT; IBM_TDB	OR	ON	2009/12/08 10:22

S103	5	"6262359"	US-PGPUB; USPAT; USOCR; FPRS; EPO; JPO; DERWENT; IBM_TDB	OR	ON	2009/12/10 10:08
S102	1	2000-587576.NRAN.	DERWENT	OR	ON	2009/12/10 10:08
S101	1	6262359B1	US-PGPUB; USPAT; USOCR; FPRS; EPO; JPO; DERWENT; IBM_TDB	OR	ON	2009/12/10 10:08
S105	11	("3081370" | "3757123" | "3948682" | "3969746").PN. OR ("4131486").URPN.	US-PGPUB; USPAT; USOCR	OR	ON	2009/12/10 10:09
S104	14	("3895975" | "4056879" | "4106047" | "4131486" | "4226017" | "4916503" | "5538564" | "5641362" | "5951742" | "5973260" | "6071753").PN. OR ("6262359").URPN.	US-PGPUB; USPAT; USOCR	OR	ON	2009/12/10 10:09
S108	19	("4090213" | "4131486" | "4133698" | "4232245" | "4255211" | "4315097" | "4316049" | "4341918" | "4365262" | "4367368" | "4385198" | "4427839").PN. OR ("4665277").URPN.	US-PGPUB; USPAT; USOCR	OR	ON	2009/12/10 10:11
S107	14	("3150999" | "4227942" | "4348254").PN. OR ("4427839").URPN.	US-PGPUB; USPAT; USOCR	OR	ON	2009/12/10 10:11
S106	12	("4090213" | "4131486" | "4133698" | "4232245" | "4255211" | "4315097" | "4316049" | "4341918" | "4365262" | "4367368" | "4385198" | "4427839").PN.	US-PGPUB; USPAT; USOCR	OR	ON	2009/12/10 10:11
S109	9	floating same emitter same solar same cell	US-PGPUB; USPAT; USOCR	OR	ON	2009/12/10 10:33
S110	19	("4090213" | "4131486" | "4133698" | "4232245" | "4255211" | "4315097" | "4316049" | "4341918" | "4365262" | "4367368" | "4385198" | "4427839").PN. OR ("4665277").URPN.	US-PGPUB; USPAT; USOCR	OR	ON	2009/12/10 10:35
S113	4	S112 and polycrystal$4	US-PGPUB; USPAT; USOCR	OR	ON	2010/05/20 10:23
S112	16	("3895975" | "4056879" | "4106047" | "4131486" | "4226017" | "4916503" | "5538564" | "5641362" | "5951742" | "5973260" | "6071753").PN. OR ("6262359").URPN.	US-PGPUB; USPAT; USOCR	OR	ON	2010/05/20 10:23
S111	7	"6262359"	US-PGPUB; USPAT; USOCR; FPRS; EPO; JPO; DERWENT; IBM_TDB	OR	ON	2010/05/20 10:23

S114	9	("4377901" | "4478879" | "5082791" | "5665175").PN. OR ("6071753").URPN.	US-PGPUB; USPAT; USOCR	OR	ON	2010/05/20 10:26
S115	10	("20020011590" | "5103851" | "5437734" | "5738732" | "6071753" | "6130380" | "6166320" | "6548751").PN. OR ("6927417").URPN.	US-PGPUB; USPAT; USOCR	OR	ON	2010/05/20 10:28
S116	6	("4837607" | "5543333" | "5738732").PN. OR ("6130380").URPN.	US-PGPUB; USPAT; USOCR	OR	ON	2010/05/20 10:29
S118	45	S117 and ((solar photovoltaic) near (battery device cell))	US-PGPUB; USPAT; USOCR	OR	ON	2010/05/20 10:43
S117	414	polycrystalline near5 substrate same emitter	US-PGPUB; USPAT; USOCR	OR	ON	2010/05/20 10:43
S119	10	"4665277"	US-PGPUB; USPAT; USOCR; FPRS; EPO; JPO; DERWENT; IBM_TDB	OR	ON	2010/05/20 11:39
S120	1	"12070742"	US-PGPUB; USPAT; USOCR; FPRS; EPO; JPO; DERWENT; IBM_TDB	OR	ON	2010/05/20 11:44
S121	1	"12070742"	US-PGPUB; USPAT; USOCR; FPRS; EPO; JPO; DERWENT; IBM_TDB	OR	ON	2012/03/15 16:12
S122	41	polysilicon near2 emitter and (photovoltaic solar near2 (Cell device battery))	US-PGPUB; USPAT; USOCR; FPRS; EPO; JPO; DERWENT; IBM_TDB	OR	OFF	2012/03/15 16:28
S123	18	"4989059"	US-PGPUB; USPAT; USOCR; FPRS; EPO; JPO; DERWENT; IBM_TDB	OR	OFF	2012/03/15 16:34
S125	9	S124 not S122	US-PGPUB; USPAT; USOCR; FPRS; EPO; JPO; DERWENT; IBM_TDB	OR	OFF	2012/03/15 16:35
S124	50	(polysilicon polycrystalline) near2 emitter and (photovoltaic solar near2	US-PGPUB; USPAT;	OR	OFF	2012/03/15 16:35

		(Cell device battery))	USOCR; FPRS; EPO; JPO; DERWENT; IBM_TDB			
S129	128	(polysilicon polycrystalline) with emitter and (photovoltaic solar near2 (Cell device battery)) and (dielectric oxide)	US-PGPUB; USPAT; USOCR; FPRS; EPO; JPO; DERWENT; IBM_TDB	OR	OFF	2012/03/15 16:37
S128	347591	(polysilicon polycrystalline) wiith emitter and (photovoltaic solar near2 (Cell device battery)) and (dielectric oxide)	US-PGPUB; USPAT; USOCR; FPRS; EPO; JPO; DERWENT; IBM_TDB	OR	OFF	2012/03/15 16:37
S127	297	(polysilicon polycrystalline) same emitter and (photovoltaic solar near2 (Cell device battery)) and (dielectric oxide)	US-PGPUB; USPAT; USOCR; FPRS; EPO; JPO; DERWENT; IBM_TDB	OR	OFF	2012/03/15 16:37
S126	343	(polysilicon polycrystalline) same emitter and (photovoltaic solar near2 (Cell device battery))	US-PGPUB; USPAT; USOCR; FPRS; EPO; JPO; DERWENT; IBM_TDB	OR	OFF	2012/03/15 16:37
S130	86	S129 not S124	US-PGPUB; USPAT; USOCR; FPRS; EPO; JPO; DERWENT; IBM_TDB	OR	OFF	2012/03/15 16:38
S131	2	"20090159111"	US-PGPUB; USPAT; USOCR; FPRS; EPO; JPO; DERWENT; IBM_TDB	OR	OFF	2012/03/15 16:43
S132	6	"2008004791"	US-PGPUB; USPAT; USOCR; FPRS; EPO; JPO; DERWENT; IBM_TDB	OR	OFF	2012/03/15 16:46
S133	10	"7468485"	US-PGPUB; USPAT; USOCR; FPRS; EPO; JPO; DERWENT; IBM_TDB	OR	OFF	2012/03/15 16:47

S134	24	("3961997" | "4927770" | "5030295" | "5053083" | "5057439" | "5164019" | "5360990" | "5369291" | "5641362" | "6274402" | "6313395" | "6333457" | "6337283" | "6387726" | "6423568" | "6998288").PN. OR ("7468485").URPN.	US-PGPUB; USPAT; USOCR	OR	OFF	2012/03/15 16:49
S136	1	"20090159111"	US-PGPUB; USPAT; USOCR	OR	OFF	2012/03/15 16:55
S135	14	"5057439"	US-PGPUB; USPAT; USOCR	OR	OFF	2012/03/15 16:55
S137	23	("4090213" | "4131486" | "4133698" | "4232245" | "4255211" | "4315097" | "4316049" | "4341918" | "4365262" | "4367368" | "4385198" | "4427839").PN. OR ("4665277").URPN.	US-PGPUB; USPAT; USOCR	OR	OFF	2012/03/15 16:58
S139	215	S126 not S129	US-PGPUB; USPAT; USOCR; FPRS; EPO; JPO; DERWENT; IBM_TDB	OR	OFF	2012/03/15 17:03
S138	0	S129 not S126	US-PGPUB; USPAT; USOCR; FPRS; EPO; JPO; DERWENT; IBM_TDB	OR	OFF	2012/03/15 17:03
S140	74	emitter and (photovoltaic solar near2 (Cell device battery)) and tunnel near oxide	US-PGPUB; USPAT; USOCR; FPRS; EPO; JPO; DERWENT; IBM_TDB	OR	OFF	2012/03/15 17:04
S142	1	S141 not S140	US-PGPUB; USPAT; USOCR; FPRS; EPO; JPO; DERWENT; IBM_TDB	OR	OFF	2012/03/15 17:10
S141	75	emitter and (photovoltaic solar near2 (Cell device battery)) and tunnel$3 near oxide	US-PGPUB; USPAT; USOCR; FPRS; EPO; JPO; DERWENT; IBM_TDB	OR	OFF	2012/03/15 17:10
S143	222	emitter and (photovoltaic solar near2 (Cell device battery)) and tunnel$3 near5 (oxide barrier)	US-PGPUB; USPAT; USOCR; FPRS; EPO; JPO; DERWENT; IBM_TDB	OR	OFF	2012/03/15 17:11
S144	147	S143 not S141	US-PGPUB;	OR	OFF	2012/03/15

			USPAT; USOCR; FPRS; EPO; JPO; DERWENT; IBM_TDB			17:12
S145	188	emitter and (photovoltaic solar near2 (Cell device battery)) and tunnel$3 near2 (oxide barrier)	US-PGPUB; USPAT; USOCR; FPRS; EPO; JPO; DERWENT; IBM_TDB	OR	OFF	2012/03/15 17:22
S147	413	(photovoltaic solar near2 (Cell device battery)) and tunnel$3 near2 (oxide barrier) and silicon	US-PGPUB; USPAT; USOCR; FPRS; EPO; JPO; DERWENT; IBM_TDB	OR	OFF	2012/03/15 17:27
S146	488	(photovoltaic solar near2 (Cell device battery)) and tunnel$3 near2 (oxide barrier)	US-PGPUB; USPAT; USOCR; FPRS; EPO; JPO; DERWENT; IBM_TDB	OR	OFF	2012/03/15 17:27
S148	238	S147 not S145	US-PGPUB; USPAT; USOCR; FPRS; EPO; JPO; DERWENT; IBM_TDB	OR	OFF	2012/03/15 17:28
S149	24	("3961997" | "4927770" | "5030295" | "5053083" | "5057439" | "5164019" | "5360990" | "5369291" | "5641362" | "6274402" | "6313395" | "6333457" | "6337283" | "6387726" | "6423568" | "6998288").PN. OR ("7468485").URPN.	US-PGPUB; USPAT; USOCR	OR	OFF	2012/03/15 17:32
S151	10	Sah.in. and emitter	US-PGPUB; USPAT; USOCR	OR	OFF	2012/03/15 17:35
S150	0	Sah.in. and emittter	US-PGPUB; USPAT; USOCR	OR	OFF	2012/03/15 17:35
S152	23	("4090213" | "4131486" | "4133698" | "4232245" | "4255211" | "4315097" | "4316049" | "4341918" | "4365262" | "4367368" | "4385198" | "4427839").PN. OR ("4665277").URPN.	US-PGPUB; USPAT; USOCR	OR	OFF	2012/03/15 17:36
S154	11442	(photovoltaic solar near2 (Cell device battery)) and (passivat$4 near2 oxide dielectric) and silicon	US-PGPUB; USPAT; USOCR; FPRS; EPO; JPO; DERWENT; IBM_TDB	OR	OFF	2012/03/15 17:39
S153	4089	(photovoltaic solar near2 (Cell device battery)) and (passivat$4 near2 oxide	US-PGPUB; USPAT;	OR	OFF	2012/03/15 17:39

		dielectric) and silicon and (passivat$4 near2 oxide dielectric) with (reflect$4 metal)	USOCR; FPRS; EPO; JPO; DERWENT; IBM_TDB			
S159	612	(photovoltaic solar near (Cell battery)) and ((passivat$4 near2 oxide) dielectric) and silicon and (passivat$4 near2 oxide dielectric) with (reflect$4 metal) and tunnel$3 and silicon	US-PGPUB; USPAT; USOCR; FPRS; EPO; JPO; DERWENT; IBM_TDB	OR	OFF	2012/03/15 17:40
S158	612	(photovoltaic solar near (Cell battery)) and ((passivat$4 near2 oxide) dielectric) and silicon and (passivat$4 near2 oxide dielectric) with (reflect$4 metal) and tunnel$3	US-PGPUB; USPAT; USOCR; FPRS; EPO; JPO; DERWENT; IBM_TDB	OR	OFF	2012/03/15 17:40
S157	4063	(photovoltaic solar near (Cell battery)) and ((passivat$4 near2 oxide) dielectric) and silicon and (passivat$4 near2 oxide dielectric) with (reflect$4 metal)	US-PGPUB; USPAT; USOCR; FPRS; EPO; JPO; DERWENT; IBM_TDB	OR	OFF	2012/03/15 17:40
S156	11276	(photovoltaic solar near (Cell battery)) and ((passivat$4 near2 oxide) dielectric) and silicon	US-PGPUB; USPAT; USOCR; FPRS; EPO; JPO; DERWENT; IBM_TDB	OR	OFF	2012/03/15 17:40
S155	11442	(photovoltaic solar near2 (Cell device battery)) and ((passivat$4 near2 oxide) dielectric) and silicon	US-PGPUB; USPAT; USOCR; FPRS; EPO; JPO; DERWENT; IBM_TDB	OR	OFF	2012/03/15 17:40
S161	301	S160 not S148	US-PGPUB; USPAT; USOCR; FPRS; EPO; JPO; DERWENT; IBM_TDB	OR	OFF	2012/03/15 17:41
S160	301	(photovoltaic solar near (Cell battery)) and ((passivat$4 near2 oxide) dielectric) and silicon and (passivat$4 near2 oxide dielectric) with (reflect$4 metal) and tunnel$3 and emitter	US-PGPUB; USPAT; USOCR; FPRS; EPO; JPO; DERWENT; IBM_TDB	OR	OFF	2012/03/15 17:41
S162	8	"5956571"	US-PGPUB; USPAT; USOCR; FPRS; EPO; JPO; DERWENT; IBM_TDB	OR	OFF	2012/03/15 17:57

S163	58	"4200472"	US-PGPUB; USPAT; USOCR; FPRS; EPO; JPO; DERWENT; IBM_TDB	OR	OFF	2012/03/15 17:58
S164	2	"20060130891"	US-PGPUB; USPAT; USOCR; FPRS; EPO; JPO; DERWENT; IBM_TDB	OR	OFF	2012/03/15 17:59
S165	50	Borden.in. and emitter	US-PGPUB; USPAT; USOCR; FPRS; EPO; JPO; DERWENT; IBM_TDB	OR	OFF	2012/03/15 18:00
S166	13	"5057439"	USPAT	OR	OFF	2012/03/16 10:33
S168	2	"20090159111"	US-PGPUB; USPAT; USOCR; FPRS; EPO; JPO; DERWENT; IBM_TDB	OR	OFF	2012/03/16 10:36
S167	0	"20090159111"	USPAT	OR	OFF	2012/03/16 10:36
S169	2	"20050268963"	US-PGPUB; USPAT; USOCR; FPRS; EPO; JPO; DERWENT; IBM_TDB	OR	OFF	2012/03/16 10:38
S170	24	("3961997" | "4927770" | "5030295" | "5053083" | "5057439" | "5164019" | "5360990" | "5369291" | "5641362" | "6274402" | "6313395" | "6333457" | "6337283" | "6387726" | "6423568" | "6998288").PN. OR ("7468485").URPN.	US-PGPUB; USPAT; USOCR	OR	OFF	2012/03/16 10:45
S171	14	("4403392" | "4502206").PN. OR ("5057439").URPN.	US-PGPUB; USPAT; USOCR	OR	OFF	2012/03/16 10:47
S173	1	"20090159111"	US-PGPUB; USPAT; USOCR	OR	OFF	2012/03/16 10:49
S172	1	"20060096635"	US-PGPUB; USPAT; USOCR	OR	OFF	2012/03/16 10:49
S174	1	"20050268963"	US-PGPUB; USPAT; USOCR	OR	OFF	2012/03/16 10:54
S175	114	polysilicon near emitter and native near oxide	US-PGPUB; USPAT; USOCR	OR	OFF	2012/03/16 11:12

S176	2	polysilicon near emitter and native near oxide and (photovoltaic and solar near2 (battery cell device))	US-PGPUB; USPAT; USOCR	OR	OFF	2012/03/16 11:13
S177	367	polysilicon near emitter and "SiO.sub.2"	US-PGPUB; USPAT; USOCR	OR	OFF	2012/03/16 11:14
S179	6	Borden.in. and polysilicon near emitter	US-PGPUB; USPAT; USOCR	OR	OFF	2012/03/16 11:15
S178	2	polysilicon near emitter and "SiO.sub.2" and (photovoltaic and solar near2 (battery cell device))	US-PGPUB; USPAT; USOCR	OR	OFF	2012/03/16 11:15
S180	10	polysilicon near emitter and (photovoltaic and solar near2 (battery cell device))	US-PGPUB; USPAT; USOCR	OR	OFF	2012/03/16 11:17
S181	17	(polycyrstalline multicrystalline polysilicon) near2 emitter and (photovoltaic and solar near2 (battery cell device))	US-PGPUB; USPAT; USOCR	OR	OFF	2012/03/16 11:19
S182	0	"2008004791"	US-PGPUB; USPAT; USOCR	OR	OFF	2012/03/16 11:27
S185	6	"2008004791"	US-PGPUB; USPAT; USOCR; FPRS; EPO; JPO; DERWENT; IBM_TDB	OR	OFF	2012/03/16 11:28
S184	0	"2008004791"	US-PGPUB; USPAT; USOCR	OR	OFF	2012/03/16 11:28
S183	2	"20080004791"	US-PGPUB; USPAT; USOCR	OR	OFF	2012/03/16 11:28
S188	552	S187 and emitter and (photovoltaic solar near (cell device battery))	US-PGPUB; USPAT; USOCR; FPRS; EPO; JPO; DERWENT; IBM_TDB	OR	OFF	2012/03/19 11:37
S187	7338	438/72.ccls. 438/57.ccls. 438/69.ccls. 438/97.ccls. 438/98.ccls. 257/461.ccls. 257/436.ccls.	US-PGPUB; USPAT; USOCR; FPRS; EPO; JPO; DERWENT; IBM_TDB	OR	OFF	2012/03/19 11:37
S186	3869	438/72.ccls. 438/57.ccls. 438/69.ccls. 438/97.ccls. 438/98.ccls. 257/461.ccls. 257/436.ccls.	USPAT	OR	OFF	2012/03/19 11:37
S190	39	S188 and oxide and polysilicon	US-PGPUB; USPAT; USOCR; FPRS; EPO; JPO; DERWENT; IBM_TDB	OR	OFF	2012/03/19 11:38

S189	426	S188 and oxide	US-PGPUB; USPAT; USOCR; FPRS; EPO; JPO; DERWENT; IBM_TDB	OR	OFF	2012/03/19 11:38
S191	419	S188 and oxide and silicon	US-PGPUB; USPAT; USOCR; FPRS; EPO; JPO; DERWENT; IBM_TDB	OR	OFF	2012/03/19 11:45
S192	237	S188 and oxide and (light near incident front) near5 (contact wir$4 connect$4)	US-PGPUB; USPAT; USOCR; FPRS; EPO; JPO; DERWENT; IBM_TDB	OR	OFF	2012/03/19 11:46
S193	12	S188 and oxide and (light near incident front) near5 (contact wir$4 connect$4) and tunnel$3 near5 oxide	US-PGPUB; USPAT; USOCR; FPRS; EPO; JPO; DERWENT; IBM_TDB	OR	OFF	2012/03/19 11:53
S196	2	"12070742"	US-PGPUB; USPAT; USOCR; FPRS; EPO; JPO; DERWENT; IBM_TDB	OR	OFF	2013/09/11 13:10
S195	16	"1270742"	US-PGPUB; USPAT; USOCR; FPRS; EPO; JPO; DERWENT; IBM_TDB	OR	OFF	2013/09/11 13:10
S194	2	"12707042"	US-PGPUB; USPAT; USOCR; FPRS; EPO; JPO; DERWENT; IBM_TDB	OR	OFF	2013/09/11 13:10
S197	31	("20030134469" | "20040200520" | "20050268963" | "20060130891" | "20060157103" | "20070082206" | "3961997" | "4427839" | "4665277" | "4927770" | "5030295" | "5053083" | "5057439" | "5164019" | "5217539" | "5266125" | "5360990" | "5369291" | "5449626" | "5479018" | "5641362" | "6262359" | "6274402" | "6313395" | "6333457" | "6337283" | "6387726" | "6423568" | "6524880" | "6998288" | "7135350").PN. OR ("8222516").URPN.	US-PGPUB; USPAT; USOCR	OR	ON	2013/09/11 13:11

S199	2	"11915984"	US-PGPUB; USPAT; USOCR	OR	ON	2013/09/11 13:26
S198	1	"20040055894"	US-PGPUB; USPAT; USOCR	OR	ON	2013/09/11 13:26
S200	2	"20090159111"	US-PGPUB; USPAT; USOCR; FPRS; EPO; JPO; DERWENT; IBM_TDB	OR	ON	2013/09/11 13:32
S201	42	("3961997" | "4927770" | "5030295" | "5053083" | "5057439" | "5164019" | "5360990" | "5369291" | "5641362" | "6274402" | "6313395" | "6333457" | "6337283" | "6387726" | "6423568" | "6998288").PN. OR ("7468485").URPN.	US-PGPUB; USPAT; USOCR	OR	ON	2013/09/11 13:35
S202	26	"5057439"	US-PGPUB; USPAT; USOCR	OR	ON	2013/09/11 13:41
S203	26	("4403392" | "4502206").PN. OR ("5057439").URPN.	US-PGPUB; USPAT; USOCR	OR	ON	2013/09/11 13:42
S204	1	"12983846"	US-PGPUB; USPAT; USOCR	OR	ON	2013/09/11 13:50
S205	33	polysilicon near emitter and (solar photovoltaic).ab.	US-PGPUB; USPAT; USOCR; FPRS; EPO; JPO; DERWENT; IBM_TDB	OR	ON	2013/09/11 13:51
S207	30	"7468485"	US-PGPUB; USPAT; USOCR; FPRS; EPO; JPO; DERWENT; IBM_TDB	OR	ON	2013/09/11 13:54
S206	3	"7468482"	US-PGPUB; USPAT; USOCR; FPRS; EPO; JPO; DERWENT; IBM_TDB	OR	ON	2013/09/11 13:54
S209	1	2009-P84539.NRAN.	DERWENT	OR	ON	2013/09/11 14:01
S208	2	"20090288704"	US-PGPUB; USPAT; USOCR; FPRS; EPO; JPO; DERWENT; IBM_TDB	OR	ON	2013/09/11 14:01
S210	3	"20070256728"	US-PGPUB; USPAT;	OR	ON	2013/09/11 14:03

			USOCR; FPRS; EPO; JPO; DERWENT; IBM_TDB			
S212	55	polysilicon near emitter and (solar photovoltaic)	US-PGPUB; USPAT; USOCR; FPRS; EPO; JPO; DERWENT; IBM_TDB	OR	ON	2013/09/11 14:08
S211	2074	polysilicon near emitter	US-PGPUB; USPAT; USOCR; FPRS; EPO; JPO; DERWENT; IBM_TDB	OR	ON	2013/09/11 14:08
S214	17	S213 not S212	US-PGPUB; USPAT; USOCR; FPRS; EPO; JPO; DERWENT; IBM_TDB	OR	ON	2013/09/11 14:14
S213	72	polysilicon near5 emitter and (solar photovoltaic)	US-PGPUB; USPAT; USOCR; FPRS; EPO; JPO; DERWENT; IBM_TDB	OR	ON	2013/09/11 14:14
S215	6	"2008004791"	US-PGPUB; USPAT; USOCR; FPRS; EPO; JPO; DERWENT; IBM_TDB	OR	ON	2013/09/11 14:15
S216	24	(polycyrstalline multicrystalline polysilicon) near2 emitter and (photovoltaic and solar near2 (battery cell device))	US-PGPUB; USPAT; USOCR	OR	OFF	2013/09/11 14:17
S217	4	lindholm.in. and solar near cell	US-PGPUB; USPAT; USOCR; FPRS; EPO; JPO; DERWENT; IBM_TDB	OR	ON	2013/09/11 14:54
S219	3	lindholm.in. and "136".clas.	US-PGPUB; USPAT; USOCR; FPRS; EPO; JPO; DERWENT; IBM_TDB	OR	ON	2013/09/11 14:56
S218	0	lindholm.in. and "136."	US-PGPUB; USPAT; USOCR;	OR	ON	2013/09/11 14:56

			FPRS; EPO; JPO; DERWENT; IBM_TDB			
S220	2	polysilicon near solar same emitter	US-PGPUB; USPAT; USOCR; FPRS; EPO; JPO; DERWENT; IBM_TDB	OR	ON	2013/09/11 14:59
S221	20	("3900943" | "4062038" | "4171997" | "4197141" | "4219368" | "4230508" | "4249957" | "4278473" | "4283589" | "4320168" | "4366338").PN. OR ("4431858").URPN.	US-PGPUB; USPAT; USOCR	OR	ON	2013/09/11 15:00
S222	6	("20030183270" | "20090255574" | "20090283138" | "3969163" | "4431858" | "4571448").PN. OR ("8283557").URPN.	US-PGPUB; USPAT; USOCR	OR	ON	2013/09/11 15:02
S223	26	("4403392" | "4502206").PN. OR ("5057439").URPN.	US-PGPUB; USPAT; USOCR	OR	ON	2013/09/11 16:29
S224	2	"12166266"	US-PGPUB; USPAT; USOCR; FPRS; EPO; JPO; DERWENT; IBM_TDB	OR	ON	2013/09/11 16:43
S227	26	polysilicon near5 emitter same oxide with dop$3 same phosphorus	US-PGPUB; USPAT; USOCR; FPRS; EPO; JPO; DERWENT; IBM_TDB	OR	ON	2013/09/11 16:45
S226	377	polysilicon near5 emitter same oxide with dop$3	US-PGPUB; USPAT; USOCR; FPRS; EPO; JPO; DERWENT; IBM_TDB	OR	ON	2013/09/11 16:45
S225	395	polysilicon near5 emitter same oxide same dopant	US-PGPUB; USPAT; USOCR; FPRS; EPO; JPO; DERWENT; IBM_TDB	OR	ON	2013/09/11 16:45
S228	6	"11201817"	US-PGPUB; USPAT; USOCR; FPRS; EPO; JPO; DERWENT; IBM_TDB	OR	ON	2013/09/11 16:48
S229	53	Swanson near Richard and solar near cell	US-PGPUB; USPAT;	OR	ON	2013/09/11 16:52

			USOCR; FPRS; EPO; JPO; DERWENT; IBM_TDB			
S230	158	"5053083"	US-PGPUB; USPAT; USOCR; FPRS; EPO; JPO; DERWENT; IBM_TDB	OR	ON	2013/09/11 16:53
S231	38	("20040200520" | "4234352" | "4478879" | "4920639" | "4927770" | "5053083" | "5320684" | "5538564" | "5641362" | "6624737").PN. OR ("7339110").URPN.	US-PGPUB; USPAT; USOCR	OR	ON	2013/09/11 17:03
S232	687	phosphosilicate near glass same (dielectric oxide) with (passivation capping)	US-PGPUB; USPAT; USOCR	OR	ON	2013/09/11 17:14
S233	41	phosphosilicate near glass same (dielectric oxide) with (passivation capping) same polysilicon	US-PGPUB; USPAT; USOCR	OR	ON	2013/09/11 17:15
S236	59	"5693578"	US-PGPUB; USPAT; USOCR	OR	ON	2013/09/11 17:17
S235	2	"20080004791"	US-PGPUB; USPAT; USOCR	OR	ON	2013/09/11 17:17
S234	0	"2008004791"	US-PGPUB; USPAT; USOCR	OR	ON	2013/09/11 17:17
S237	11	(back near surface near field BSF) same polysilicon	US-PGPUB; USPAT; USOCR	OR	ON	2013/09/11 17:19
S239	3	S238 not S237	US-PGPUB; USPAT; USOCR; FPRS; EPO; JPO; DERWENT; IBM_TDB	OR	ON	2013/09/11 17:21
S238	14	(back near surface near field BSF) same polysilicon	US-PGPUB; USPAT; USOCR; FPRS; EPO; JPO; DERWENT; IBM_TDB	OR	ON	2013/09/11 17:21
S241	81	S240 not S238	US-PGPUB; USPAT; USOCR; FPRS; EPO; JPO; DERWENT; IBM_TDB	OR	ON	2013/09/11 17:23
S240	81	(back near surface near field BSF) same polycrystalline near silicon	US-PGPUB; USPAT; USOCR; FPRS;	OR	ON	2013/09/11 17:23

			EPO; JPO; DERWENT; IBM_TDB			
S243	143	S242 not S238	US-PGPUB; USPAT; USOCR; FPRS; EPO; JPO; DERWENT; IBM_TDB	OR	ON	2013/09/11 17:35
S242	157	(back near surface near field BSF) and polysilicon	US-PGPUB; USPAT; USOCR; FPRS; EPO; JPO; DERWENT; IBM_TDB	OR	ON	2013/09/11 17:35
S245	108	(back near surface near field BSF) same passivat$4 and (solar photovoltaic).ab. and heterojunction	US-PGPUB; USPAT; USOCR; FPRS; EPO; JPO; DERWENT; IBM_TDB	OR	ON	2013/09/11 17:45
S244	476	(back near surface near field BSF) same passivat$4 and (solar photovoltaic).ab.	US-PGPUB; USPAT; USOCR; FPRS; EPO; JPO; DERWENT; IBM_TDB	OR	ON	2013/09/11 17:45
S246	26	"4315097"	US-PGPUB; USPAT; USOCR; FPRS; EPO; JPO; DERWENT; IBM_TDB	OR	ON	2013/09/11 18:00
S248	3	"20040200520"	US-PGPUB; USPAT; USOCR; FPRS; EPO; JPO; DERWENT; IBM_TDB	OR	ON	2013/09/11 18:02
S247	2	"20040205520"	US-PGPUB; USPAT; USOCR; FPRS; EPO; JPO; DERWENT; IBM_TDB	OR	ON	2013/09/11 18:02
S249	25	(back near surface near field BSF) same passivat$4 and (solar photovoltaic).ab. and polysilicon	US-PGPUB; USPAT; USOCR; FPRS; EPO; JPO; DERWENT; IBM_TDB	OR	ON	2013/09/11 18:09
S250	717	(back near surface near field BSF) same (capping oxide dielectric	US-PGPUB; USPAT;	OR	ON	2013/09/11 18:10

		passivat$4) and (solar photovoltaic).ab.	USOCR; FPRS; EPO; JPO; DERWENT; IBM_TDB			
S251	75	(back near surface near field BSF) same (capping oxide dielectric passivat$4) and (solar photovoltaic).ab. and Phosphosilicate	US-PGPUB; USPAT; USOCR; FPRS; EPO; JPO; DERWENT; IBM_TDB	OR	ON	2013/09/11 18:11
S253	39	S252 not S251	US-PGPUB; USPAT; USOCR; FPRS; EPO; JPO; DERWENT; IBM_TDB	OR	ON	2013/09/11 18:16
S252	114	(back near surface near field BSF) same (capping oxide dielectric passivat$4) and (solar photovoltaic).ab. and (Phosphosilicate PSG)	US-PGPUB; USPAT; USOCR; FPRS; EPO; JPO; DERWENT; IBM_TDB	OR	ON	2013/09/11 18:16
S255	44	S254 not S252	US-PGPUB; USPAT; USOCR; FPRS; EPO; JPO; DERWENT; IBM_TDB	OR	ON	2013/09/11 18:18
S254	158	(back near surface near field BSF) same (capping oxide dielectric passivat$4) and (Phosphosilicate PSG)	US-PGPUB; USPAT; USOCR; FPRS; EPO; JPO; DERWENT; IBM_TDB	OR	ON	2013/09/11 18:18
S256	1163	(back near surface near field BSF) same (capping oxide dielectric passivat$4)	US-PGPUB; USPAT; USOCR; FPRS; EPO; JPO; DERWENT; IBM_TDB	OR	ON	2013/09/11 18:20
S258	33	(back near surface near field BSF) same (capping oxide dielectric passivat$4) and (solar photovoltaic photoelectric).ab. and polysilicon	US-PGPUB; USPAT; USOCR; FPRS; EPO; JPO; DERWENT; IBM_TDB	OR	ON	2013/09/11 18:21
S257	727	(back near surface near field BSF) same (capping oxide dielectric passivat$4) and (solar photovoltaic photoelectric).ab.	US-PGPUB; USPAT; USOCR; FPRS; EPO; JPO; DERWENT; IBM_TDB	OR	ON	2013/09/11 18:21

S259	703	polysilicon with PSG with (dielectric oxide)	US-PGPUB; USPAT; USOCR; FPRS; EPO; JPO; DERWENT; IBM_TDB	OR	ON	2013/09/11 18:30
S260	81	polysilicon with PSG with (dielectric oxide) and emitter	US-PGPUB; USPAT; USOCR; FPRS; EPO; JPO; DERWENT; IBM_TDB	OR	ON	2013/09/11 18:31
S261	225	polysilicon with PSG with (dielectric oxide) same dop$3	US-PGPUB; USPAT; USOCR; FPRS; EPO; JPO; DERWENT; IBM_TDB	OR	ON	2013/09/11 18:33
S263	44	polysilicon with PSG with (dielectric oxide) and (solar photovoltaic)	US-PGPUB; USPAT; USOCR; FPRS; EPO; JPO; DERWENT; IBM_TDB	OR	ON	2013/09/11 18:34
S262	2	polysilicon with PSG with (dielectric oxide) same dop$3 and (solar photovoltaic)	US-PGPUB; USPAT; USOCR; FPRS; EPO; JPO; DERWENT; IBM_TDB	OR	ON	2013/09/11 18:34
S265	62	(phosphosilicate PSG) with (dielectric oxide) same dop$4 and (solar photovoltaic).ab.	US-PGPUB; USPAT; USOCR; FPRS; EPO; JPO; DERWENT; IBM_TDB	OR	ON	2013/09/11 18:35
S264	161	(phosphosilicate PSG) with (dielectric oxide) same dop$4 and (solar photovoltaic)	US-PGPUB; USPAT; USOCR; FPRS; EPO; JPO; DERWENT; IBM_TDB	OR	ON	2013/09/11 18:35
S267	41	S266 not S265	US-PGPUB; USPAT; USOCR; FPRS; EPO; JPO; DERWENT; IBM_TDB	OR	ON	2013/09/11 18:42
S266	103	(phosphosilicate PSG borosilicate BSG) with (dielectric oxide) same dop$4 and (solar photovoltaic).ab.	US-PGPUB; USPAT; USOCR; FPRS; EPO; JPO;	OR	ON	2013/09/11 18:42

			DERWENT; IBM_TDB			
S268	2	"20080173347"	US-PGPUB; USPAT; USOCR; FPRS; EPO; JPO; DERWENT; IBM_TDB	OR	ON	2013/09/11 18:43
S269	3	"20060196535"	US-PGPUB; USPAT; USOCR; FPRS; EPO; JPO; DERWENT; IBM_TDB	OR	ON	2013/09/11 18:45
S270	179	"4927770"	US-PGPUB; USPAT; USOCR; FPRS; EPO; JPO; DERWENT; IBM_TDB	OR	ON	2013/09/11 18:46
S271	57	(phosphosilicate PSG borosilicate BSG) with (dielectric oxide cap$4) same dop$4 and (back near surface near field BSF)	US-PGPUB; USPAT; USOCR; FPRS; EPO; JPO; DERWENT; IBM_TDB	OR	ON	2013/09/11 18:50
S273	0	S271 not S271	US-PGPUB; USPAT; USOCR; FPRS; EPO; JPO; DERWENT; IBM_TDB	OR	ON	2013/09/11 18:52
S272	145	(phosphosilicate PSG borosilicate BSG) with (dielectric oxide cap$4) and (back near surface near field BSF)	US-PGPUB; USPAT; USOCR; FPRS; EPO; JPO; DERWENT; IBM_TDB	OR	ON	2013/09/11 18:52
S274	88	S272 not S271	US-PGPUB; USPAT; USOCR; FPRS; EPO; JPO; DERWENT; IBM_TDB	OR	ON	2013/09/11 18:53
S275	190	(phosphosilicate PSG borosilicate BSG) with (dielectric oxide cap$4) with (dop$4) with (burn$4 escap$4 leav$4 diffus$4)	US-PGPUB; USPAT; USOCR; FPRS; EPO; JPO; DERWENT; IBM_TDB	OR	ON	2013/09/12 10:22
S276	130	(phosphosilicate PSG borosilicate BSG) with (dielectric "SiO.sub.2" silicon near oxide cap$4) with (dop$4) with	US-PGPUB; USPAT; USOCR;	OR	ON	2013/09/12 10:28

		(burn$4 escap$4 leav$4 diffus$4)	FPRS; EPO; JPO; DERWENT; IBM_TDB			
S277	341	(phosphosilicate PSG borosilicate BSG) with (dielectric "SiO.sub.2" silicon near oxide cap$4) and (solar photoelectric photovoltaic).ab.	US-PGPUB; USPAT; USOCR; FPRS; EPO; JPO; DERWENT; IBM_TDB	OR	ON	2013/09/12 10:39
S278	14	(phosphosilicate PSG borosilicate BSG) with (dielectric "SiO.sub.2" silicon near oxide cap$4) with (dop$4) with (burn$4 escap$4 leav$4 diffus$4) and (solar photoelectric photovoltaic).ab.	US-PGPUB; USPAT; USOCR; FPRS; EPO; JPO; DERWENT; IBM_TDB	OR	ON	2013/09/12 10:42
S279	23	(phosphosilicate PSG borosilicate BSG) with (dielectric "SiO.sub.2" silicon near oxide cap$4) with (dop$4) with (burn$4 escap$4 leav$4 diffus$4) and (solar photoelectric photovoltaic)	US-PGPUB; USPAT; USOCR; FPRS; EPO; JPO; DERWENT; IBM_TDB	OR	ON	2013/09/12 10:44
S280	18	(phosphosilicate PSG borosilicate BSG) with (cap$4) with (dop$4) and (solar photoelectric photovoltaic)	US-PGPUB; USPAT; USOCR; FPRS; EPO; JPO; DERWENT; IBM_TDB	OR	ON	2013/09/12 10:46
S281	35	("3895975" | "4056879" | "4106047" | "4131486" | "4226017" | "4916503" | "5538564" | "5641362" | "5951742" | "5973260" | "6071753").PN. OR ("6262359").URPN.	US-PGPUB; USPAT; USOCR	OR	ON	2013/09/12 12:04
S282	6	(oxide with tunnel) same (pn near junction) and (solar photovoltaic).ab.	US-PGPUB; USPAT; USOCR; FPRS; EPO; JPO; DERWENT; IBM_TDB	OR	ON	2013/09/12 12:08
S285	80	S284 not S283	US-PGPUB; USPAT; USOCR; FPRS; EPO; JPO; DERWENT; IBM_TDB	OR	ON	2013/09/12 12:10
S284	86	(oxide with tunnel$5) same (junction) and (solar photovoltaic).ab.	US-PGPUB; USPAT; USOCR; FPRS; EPO; JPO; DERWENT; IBM_TDB	OR	ON	2013/09/12 12:10
S283	6	(oxide with tunnel$5) same (pn near junction) and (solar photovoltaic).ab.	US-PGPUB; USPAT; USOCR;	OR	ON	2013/09/12 12:10

			FPRS; EPO; JPO; DERWENT; IBM_TDB			
S286	3	"20070256728"	US-PGPUB; USPAT; USOCR; FPRS; EPO; JPO; DERWENT; IBM_TDB	OR	ON	2013/09/12 12:12
S287	52	"4272641"	US-PGPUB; USPAT; USOCR; FPRS; EPO; JPO; DERWENT; IBM_TDB	OR	ON	2013/09/12 12:14
S290	87	S289 not S287	US-PGPUB; USPAT; USOCR; FPRS; EPO; JPO; DERWENT; IBM_TDB	OR	ON	2013/09/12 12:15
S289	88	thin same (oxide with tunnel$5) and (solar photovoltaic).ab.	US-PGPUB; USPAT; USOCR; FPRS; EPO; JPO; DERWENT; IBM_TDB	OR	ON	2013/09/12 12:15
S288	211	(oxide with tunnel$5) and (solar photovoltaic).ab.	US-PGPUB; USPAT; USOCR; FPRS; EPO; JPO; DERWENT; IBM_TDB	OR	ON	2013/09/12 12:15
S291	1100	(oxide with tunnel$5) and (solar photovoltaic photoelectric)	US-PGPUB; USPAT; USOCR; FPRS; EPO; JPO; DERWENT; IBM_TDB	OR	ON	2013/09/12 12:22
S293	243	(S292 not S289)	US-PGPUB; USPAT; USOCR; FPRS; EPO; JPO; DERWENT; IBM_TDB	OR	ON	2013/09/12 12:24
S292	301	(oxide with tunnel$5) same (pn junction p-type n-type) and (solar photovoltaic photoelectric)	US-PGPUB; USPAT; USOCR; FPRS; EPO; JPO; DERWENT; IBM_TDB	OR	ON	2013/09/12 12:24
S295	6	("3990097" | "4338482").PN. OR	US-PGPUB;	OR	ON	2013/09/12

		("4495375").URPN.	USPAT; USOCR			12:31
S294	7	"4495375"	US-PGPUB; USPAT; USOCR; FPRS; EPO; JPO; DERWENT; IBM_TDB	OR	ON	2013/09/12 12:31
S296	24	("3559281" | "4013485" | "4062102" | "4253881" | "4403239" | "4404421" | "4404422" | "4495375" | "4640002" | "4806496" | "4828628").PN. OR ("4891325").URPN.	US-PGPUB; USPAT; USOCR	OR	ON	2013/09/12 12:32
S297	60	"6998288"	US-PGPUB; USPAT; USOCR; FPRS; EPO; JPO; DERWENT; IBM_TDB	OR	ON	2013/09/12 12:41
S298	53	("20040200520" | "4927770" | "5053083" | "5164019" | "5217539" | "5360990" | "5369291" | "6274402" | "6313395" | "6333457" | "6337283" | "6387726" | "6423568").PN. OR ("6998288").URPN.	US-PGPUB; USPAT; USOCR	OR	ON	2013/09/12 12:55
S299	23	Sunpower.as. and oxide.clm.	US-PGPUB; USPAT; USOCR; FPRS; EPO; JPO; DERWENT; IBM_TDB	OR	ON	2013/09/12 13:35
L1	11	Sunpower.as. and (dielectric oxide).clm. and (polysilicon).clm.	US-PGPUB; USPAT; USOCR; FPRS; EPO; JPO; DERWENT; IBM_TDB	OR	ON	2013/09/12 16:16
L2	6	"7737357"	US-PGPUB; USPAT; USOCR; FPRS; EPO; JPO; DERWENT; IBM_TDB	OR	ON	2013/09/12 16:18
L4	13	"7705237"	US-PGPUB; USPAT; USOCR; FPRS; EPO; JPO; DERWENT; IBM_TDB	OR	ON	2013/09/12 16:19
L3	60	"6998288"	US-PGPUB; USPAT; USOCR; FPRS; EPO; JPO; DERWENT;	OR	ON	2013/09/12 16:19

			IBM_TDB			
L5	2	"8486746"	US-PGPUB; USPAT; USOCR; FPRS; EPO; JPO; DERWENT; IBM_TDB	OR	ON	2013/09/12 16:20
L7	4	"8409912"	US-PGPUB; USPAT; USOCR; FPRS; EPO; JPO; DERWENT; IBM_TDB	OR	ON	2013/09/12 16:21
L6	8	"7851698"	US-PGPUB; USPAT; USOCR; FPRS; EPO; JPO; DERWENT; IBM_TDB	OR	ON	2013/09/12 16:21
L9	3	8 not 1	US-PGPUB; USPAT; USOCR; FPRS; EPO; JPO; DERWENT; IBM_TDB	OR	ON	2013/09/12 16:22
L8	14	Sunpower.as. and (dielectric oxide cap$4).clm. and (polysilicon polycrystalline).clm.	US-PGPUB; USPAT; USOCR; FPRS; EPO; JPO; DERWENT; IBM_TDB	OR	ON	2013/09/12 16:22

EAST Search History (Interference)

<This search history is empty>

9/12/2013 4:43:04 PM
C:\Users\dpillay\Documents\EAST\Workspaces\13495577.wsp

Doc Code: M865 or FAI.REQ.INTV

PTOL-413A (10-09)
Approved for use through 07/31/2012. OMB 0651-0031
U.S. Patent and Trademark Office: U.S. DEPARTMENT OF COMMERCE

Applicant Initiated Interview Request Form

Application No.: 13/495,577 First Named Applicant: Peter John COUSINS
Examiner: PILLAY, DEVINA Art Unit: 1755 Status of Application: pending

Tentative Participants:
(1) Patrick Benedicto (2)_____
(3)_____ (4)_____

Proposed Date of Interview: November 4, 2013 **Proposed Time:** 1:00 PM EST **(AM/PM)**

Type of Interview Requested:
(1) [X] Telephonic (2) [ ] Personal (3) [ ] Video Conference

Exhibit To Be Shown or Demonstrated: [ ] YES [X] NO
If yes, provide brief description:_____

Issues To Be Discussed

Issues (Rej., Obj., etc)	Claims/ Fig. #s	Prior Art	Discussed	Agreed	Not Agreed
(1) Rej	Claims 1, 21, 28	A, U, D	[ ]	[ ]	[ ]
(2)_____	_____	_____	[ ]	[ ]	[ ]
(3)_____	_____	_____	[ ]	[ ]	[ ]
(4)_____	_____	_____	[ ]	[ ]	[ ]

[ ] Continuation Sheet Attached
[X] Proposed Amendment or Arguments Attached
Brief Description of Arguments to be Presented:

References do not disclose features of claims

An interview was conducted on the above-identified application on _____.
NOTE: This form should be completed by applicant and submitted to the examiner in advance of the interview (see MPEP § 713.01).
This application will not be delayed from issue because of applicant's failure to submit a written record of this interview. Therefore, applicant is advised to file a statement of the substance of this interview (37 CFR 1.133(b)) as soon as possible.

/Patrick D. Benedicto/
Applicant/Applicant's Representative Signature

Examiner/SPE Signature

PATRICK D. BENEDICTO
Typed/Printed Name of Applicant or Representative

40,909
Registration Number, if applicable

This collection of information is required by 37 CFR 1.133. The information is required to obtain or retain a benefit by the public which is to file (and by the USPTO to process) an application. Confidentiality is governed by 35 U.S.C. 122 and 37 CFR 1.11 and 1.14. This collection is estimated to take 21 minutes to complete, including gathering, preparing, and submitting the completed application form to the USPTO. Time will vary depending upon the individual case. Any comments on the amount of time you require to complete this form and/or suggestions for reducing this burden, should be sent to the Chief Information Officer, U.S. Patent and Trademark Office, U.S. Department of Commerce, P.O. Box 1450, Alexandria, VA 22313-1450. DO NOT SEND FEES OR COMPLETED FORMS TO THIS ADDRESS. SEND TO: Commissioner for Patents, P.O. Box 1450, Alexandria, VA 22313-1450.
If you need assistance in completing the form, call 1-800-PTO-9199 and select option 2.

IN THE UNITED STATES PATENT AND TRADEMARK OFFICE

In re Application of:

Peter John COUSINS

Application No.: 13/495,577 Examiner: PILLAY, DEVINA

Filing Date: June 13, 2012 Art Unit: 1755

Title: FRONT CONTACT SOLAR CELL WITH FORMED EMITTER

FIRST ACTION INTERVIEW

INTRODUCTORY COMMENTS

This paper is responsive to the First Action Interview Pilot Program Pre-Interview Communication mailed on September 16, 2013. A completed Applicant Initiated Interview Request Form is submitted herewith.

Applicant proposes the following amendments to the claims.

PROPOSED AMENDMENTS TO THE CLAIMS

1-8. (canceled)

9. (currently amended) A method of fabricating a solar cell having a front side facing the sun to collect solar radiation during normal operation and a backside opposite the front side, the method comprising:

forming a layer of polysilicon over a back surface of an N-type silicon substrate on the backside of the solar cell;

forming a P-type dopant source over the layer of polysilicon;

forming a capping layer over the P-type dopant source; and

diffusing P-type dopants from the P-type dopant source to the layer of polysilicon to form a backside junction with the N-type silicon substrate; ~~and~~

diffusing N-type dopants into a front surface of the N-type silicon substrate; and

forming a metal contact on the front side of the solar cell, wherein the metal contact is electrically coupled to the N-type silicon substrate.

10. (original) The method of claim 9 wherein the P-type dopant source comprises borosilicate glass.

11. (original) The method of claim 9 wherein diffusing N-type dopants into the front surface of the N-type silicon substrate includes forming an N-type dopant source over the N-type silicon substrate and diffusing N-type dopants from the N-type dopants source into the N-type silicon substrate.

12. (original) The method of claim 11 wherein the N-type dopant source comprises phosphorus doped silicon dioxide.

13. (original) The method of claim 9 further comprising:

texturing the front surface of the N-type silicon substrate; and

forming an antireflective layer over the textured front surface of the N-type silicon substrate.

14. (original) The method of claim 13 wherein the antireflective layer comprises silicon nitride.

15. (original) The method of claim 9 wherein the diffusion of P-type dopants from the P-type dopant source to the layer of polysilicon and the diffusion of N-type dopants into the front surface of the N-type silicon substrate are performed in situ.

16. (original) The method of claim 9 wherein the capping layer comprises undoped silicon dioxide.

17-20. (canceled)

21. (Previously presented) A method of fabricating a solar cell comprising:

forming a layer of polysilicon over a back surface of a silicon substrate;

forming a first dopant source layer over the layer of polysilicon;

diffusing dopants from the first dopant source layer to the layer of polysilicon to form a backside junction with the silicon substrate; ~~and~~

diffusing dopants into a front surface of the silicon substrate, the front surface of the silicon substrate facing the sun during normal operation; and

forming a metal contact on the front surface of the silicon substrate, wherein the metal contact is electrically coupled to the silicon substrate.

22. (Previously presented) The method of claim 21 wherein the first dopant source layer comprises P-type dopants.

23. (Previously presented) The method of claim 21 wherein the first dopant source layer comprises borosilicate glass.

24. (Previously presented) The method of claim 21 wherein diffusing dopants into the front surface of the silicon substrate comprises forming a second dopant source layer over the silicon substrate and diffusing dopants from the second dopant source layer into the silicon substrate.

25. (Previously presented) The method of claim 24 wherein the second dopant source layer comprises phosphorus doped silicon dioxide.

26. (Previously presented) The method of claim 21 further comprising:

texturing the front surface of the silicon substrate; and

forming an antireflective layer over the textured front surface of the silicon substrate.

27. (Previously presented) The method of claim 21 wherein the diffusion of dopants from the first dopant source layer to the layer of polysilicon and the diffusion of dopants into the front surface of the silicon substrate are performed in situ.

28. (Previously presented) A method of fabricating a solar cell comprising:

forming an oxide layer over a back surface of a silicon substrate;

forming a layer of polysilicon over the oxide layer;

diffusing dopants into the layer of polysilicon to form a backside junction with the silicon substrate; ~~and~~

diffusing dopants into a front surface of the silicon substrate, the front surface of the silicon substrate facing the sun during normal operation; and

forming a metal contact on the front surface of the silicon substrate, wherein the metal contact is electrically coupled to the silicon substrate.

29. (Currently amended) The method of claim 28 ~~21~~ wherein diffusing dopants into the layer of polysilicon to form the backside junction with the silicon substrate comprises:

forming a first dopant source layer over the layer of polysilicon; and

diffusing dopants from the first dopant source layer into the layer of polysilicon.

30. (Currently amended) The method of claim 28 ~~21~~ wherein diffusing dopants into the front surface of the silicon substrate comprises forming a second dopant source layer over the silicon substrate and diffusing dopants from the second dopant source layer into the silicon substrate.

31. (Currently amended) The method of claim 28 ~~21~~ further comprising:

texturing the front surface of the silicon substrate.

32. (Previously presented) The method of claim 31 further comprising:

forming an antireflective layer over the textured front surface of the silicon substrate.

ARGUMENTS

Claims 9-16 and 21-32 remain in the application.

Claim Rejections – 35 U.S.C. §103

The Pre-Interview Communication rejects claims 9, 11, 15, 21, 22, 24, 27, 29, 30, and 32 under pre-AIA 35 U.S.C. §103(a) as being unpatentable over US 6,262,359 to Meier et al. ("Meier") in view of Lindholm, *Heavily Doped Polysilicon-Contact Solar Cells* ("Lindholm"). The rejection is respectfully traversed.

Claim 9 is patentable over the combination of Meier and Lindholm at least for reciting: "diffusing P-type dopants from the P-type dopant source to the layer of polysilicon to form a backside junction with the N-type silicon substrate." Meier discloses an aluminum silicon alloy that provides p+ doping and back metal contact (Meier, col. 4, lines 15-17). Meier does not teach or suggest the recited diffusion of P-type dopants from the P-type dopant source to the layer of polysilicon. Instead of diffusion, Meier teaches formation of a p+ layer 220 by epitaxial growth (Meier, col. 4, lines 62-66).

It is respectfully submitted that Lindholm does not add to Meier. Lindholm discloses heavily doped polysilicon-contact solar cells. It is respectfully submitted that one of ordinary skill in the art would have no objective reason to substitute the polysilicon of Lindholm for Meier's aluminum-silicon alloy, as polysilicon cannot provide a metal contact and doping to the substrate. The proposed modification involves a substantial redesign of Meier and changes the principal mode of operation of Meier.

Claim 21 is patentable over the combination of Meier and Lindholm for similar reasons.

The Pre-Interview Communication rejects claims 9-16 and 21-32 under pre-AIA 35 U.S.C. §103(a) as being unpatentable over US 6,998,288 to Smith et al. ("Smith") in view of Lindholm. The rejection is respectfully traversed.

Claim 9 is patentable over the combination of Smith and Lindholm at least for reciting: "forming a metal on the front side of the solar cell, wherein the metal contact is electrically coupled to the N-type silicon substrate." It is respectfully submitted that Smith discloses a backside contact solar cell. Accordingly, Smith does not disclose a metal contact that connects to the substrate from the front side of the solar cell. Lindholm does not add to Smith in this regard.

Claims 21 and 28 are similarly patentable over the combination of Smith and Lindholm.

Double Patenting

Applicant will consider filing a terminal disclaimer to obviate the Double Patenting rejection as to US 8,207,444 to Cousins.

Applicant respectfully traverses the Double Patenting rejection as to the other references.

The undersigned is looking forward to the interview with the Examiner.

Respectfully submitted,

Dated: October 17, 2013

/Patrick Benedicto/

Patrick D. Benedicto, Reg. No. 40,909
Okamoto & Benedicto LLP
P.O. Box 641330
San Jose, CA 95164
Tel.: (408)436-2110
Fax.: (408)436-2114

Electronic Patent Application Fee Transmittal

Application Number:	13495577
Filing Date:	13-Jun-2012
Title of Invention:	FRONT CONTACT SOLAR CELL WITH FORMED EMITTER
First Named Inventor/Applicant Name:	Peter John COUSINS
Filer:	Patrick D. Benedicto/jina mangoaang
Attorney Docket Number:	10031.004210

Filed as Large Entity

Utility under 35 USC 111(a) Filing Fees

Description	Fee Code	Quantity	Amount	Sub-Total in USD($)
Basic Filing:				
Pages:				
Claims:				
Miscellaneous-Filing:				
Petition:				
Patent-Appeals-and-Interference:				
Post-Allowance-and-Post-Issuance:				
Extension-of-Time:				
Extension - 1 month with $0 paid	1251	1	200	200

Description	Fee Code	Quantity	Amount	Sub-Total in USD($)
Miscellaneous:				
			Total in USD ($)	**200**

Electronic Acknowledgement Receipt

EFS ID:	17159306
Application Number:	13495577
International Application Number:	
Confirmation Number:	3380
Title of Invention:	FRONT CONTACT SOLAR CELL WITH FORMED EMITTER
First Named Inventor/Applicant Name:	Peter John COUSINS
Customer Number:	74254
Filer:	Patrick D. Benedicto/jina mangoaang
Filer Authorized By:	Patrick D. Benedicto
Attorney Docket Number:	10031.004210
Receipt Date:	17-OCT-2013
Filing Date:	13-JUN-2012
Time Stamp:	17:51:30
Application Type:	Utility under 35 USC 111(a)

Payment information:

Submitted with Payment	yes
Payment Type	Credit Card
Payment was successfully received in RAM	$200
RAM confirmation Number	5547
Deposit Account	
Authorized User	

File Listing:

Document Number	Document Description	File Name	File Size(Bytes)/ Message Digest	Multi Part /.zip	Pages (if appl.)

1	First Action Interview - Schedule Interview request	S0123US1_ROAmailed16Sept2013.pdf	524833 35ceeac88b5d2157e76b8e6fca58abe6e665621c	no	9
Warnings:					
Information:					
2	Fee Worksheet (SB06)	fee-info.pdf	30494 04acf5f447ccafa2f4619d949bc45117a3682349	no	2
Warnings:					
Information:					
			Total Files Size (in bytes):	555327	

This Acknowledgement Receipt evidences receipt on the noted date by the USPTO of the indicated documents, characterized by the applicant, and including page counts, where applicable. It serves as evidence of receipt similar to a Post Card, as described in MPEP 503.

<u>New Applications Under 35 U.S.C. 111</u>
If a new application is being filed and the application includes the necessary components for a filing date (see 37 CFR 1.53(b)-(d) and MPEP 506), a Filing Receipt (37 CFR 1.54) will be issued in due course and the date shown on this Acknowledgement Receipt will establish the filing date of the application.

<u>National Stage of an International Application under 35 U.S.C. 371</u>
If a timely submission to enter the national stage of an international application is compliant with the conditions of 35 U.S.C. 371 and other applicable requirements a Form PCT/DO/EO/903 indicating acceptance of the application as a national stage submission under 35 U.S.C. 371 will be issued in addition to the Filing Receipt, in due course.

<u>New International Application Filed with the USPTO as a Receiving Office</u>
If a new international application is being filed and the international application includes the necessary components for an international filing date (see PCT Article 11 and MPEP 1810), a Notification of the International Application Number and of the International Filing Date (Form PCT/RO/105) will be issued in due course, subject to prescriptions concerning national security, and the date shown on this Acknowledgement Receipt will establish the international filing date of the application.

IN THE UNITED STATES PATENT AND TRADEMARK OFFICE

In re Application of: Docket No.: 10031.004210

Peter John COUSINS

Application No.: 13/495,577 Examiner: Pillay, Devina

Filing Date: June 13, 2012 Art Unit: 1755

Title: FRONT CONTACT SOLAR CELL WITH FORMED EMITTER

Submission of Rescission of Previous Nonpublication Request and, if applicable, Notice of Foreign Filing

Commissioner for Patents
P.O. Box 1450
Alexandria, VA 22313-1450

Dear Sir:

Applicant hereby submits a "Rescission of Previous Nonpublication Request and, if applicable, Notice of Foreign Filing" (form PTO/SB/36). Under MPEP § 1122, applicant notes that the original certification under 35 U.S.C. 122 (b) was improper.

Respectfully submitted,

Dated: October 28, 2013

By: /Patrick D. Benedicto, Reg. No. 40,909/
PATRICK D. BENEDICTO
Registration No. 40,909
(408) 436-2110
(408) 436-2114 (Fax)

PTO/SB/36 (07-09)
Approved for use through 07/31/2012. OMB 0651-0031
U.S. Patent and Trademark Office; U. S. DEPARTMENT OF COMMERCE
Under the Paperwork Reduction Act of 1995, no persons are required to respond to a collection of information unless it displays a valid OMB control number.

RESCISSION OF PREVIOUS NONPUBLICATION REQUEST
(35 U.S.C. 122(b)(2)(B)(ii))
AND, IF APPLICABLE,
NOTICE OF FOREIGN FILING
(35 U.S.C. 122(b)(2)(B)(iii))

Send completed form to:
Mail Stop PG Pub
Commissioner for Patents
P.O. Box 1450
Alexandria, VA 22313-1450
FAX: (571) 273-8300

Application Number	13/495,577
Filing Date	06/13/2012
First Named Inventor	Peter John Cousins
Title	FRONT CONTACT SOLAR CELL WITH FORMED EMITTER
Atty Docket Number	10031.004210
Art Unit	1755
Examiner	PILLAY, DEVINA

A request that the above-identified application not be published under 35 U.S.C. 122(b) (nonpublication request) was included with the above-identified application on filing pursuant to 35 U.S.C. 122(b)(2)(B)(i).
I hereby **rescind** the previous nonpublication request.

If a notice of foreign or international filing is or will be required by 35 U.S.C. 122(b)(2)(B)(iii) and 37 CFR 1.213(c), I hereby provide such notice. This notice is being provided no later than forty-five (**45**) days after the date of such foreign or international filing.

*If a notice of subsequent foreign or international filing required by 35 U.S.C. 122(b)(2)(B)(iii) and 37 CFR 1.213(c) was not filed within forty-five (**45**) days after the date of filing of the foreign or international application, the application is ABANDONED, and a petition to revive under 37 CFR 1.137(b) is required. See 37 CFR 1.137(f).*

/Patrick D. Benedicto/	October 28, 2013
Signature	Date
PATRICK D. BENEDICTO	40,909
Typed or printed name	Registration Number, if applicable
408.436.2110	
Telephone Number	

This request must be signed in compliance with 37 CFR 1.33(b).

If information or assistance is needed in completing this form, please contact the Pre-Grant Publication Division at (703)605-4283 or by e-mail at PGPub@USPTO.gov.

CERTIFICATE OF MAILING OR TRANSMISSION

I hereby certify that this correspondence is being deposited with the United States Postal Service with sufficient postage as first class mail in an envelope addressed to: Mail Stop PG Pub, Commissioner for Patents, P.O. Box 1450, Alexandria, VA 22313-1450, or facsimile transmitted to the U.S. Patent and Trademark Office on the date shown below.

Signature

Name (Print/Type) | Date

This collection of information is required by 37 CFR 1.213(b). The information is required to obtain or retain a benefit by the public which is to file (and by the USPTO to process) an application. Confidentiality is governed by 35 U.S.C. 122 and 37 CFR 1.11 and 1.14. This collection is estimated to take 6 minutes to complete, including gathering, preparing, and submitting the completed application form to the USPTO. Time will vary depending upon the individual case. Any comments on the amount of time you require to complete this form and/or suggestions for reducing this burden, should be sent to the Chief Information Officer, U.S. Patent and Trademark Office, U.S. Department of Commerce, P.O. Box 1450, Alexandria, VA 22313-1450. DO NOT SEND FEES OR COMPLETED FORMS TO THIS ADDRESS. **SEND TO: Mail Stop PG Pub, Commissioner for Patents, P.O. Box 1450, Alexandria, VA 22313-1450.**

If you need assistance in completing the form, call 1-800-PTO-9199 and select option 2.

Electronic Acknowledgement Receipt

EFS ID:	17241939
Application Number:	13495577
International Application Number:	
Confirmation Number:	3380
Title of Invention:	FRONT CONTACT SOLAR CELL WITH FORMED EMITTER
First Named Inventor/Applicant Name:	Peter John COUSINS
Customer Number:	74254
Filer:	Patrick D. Benedicto/jina mangaoang
Filer Authorized By:	Patrick D. Benedicto
Attorney Docket Number:	10031.004210
Receipt Date:	28-OCT-2013
Filing Date:	13-JUN-2012
Time Stamp:	18:52:31
Application Type:	Utility under 35 USC 111(a)

Payment information:

Submitted with Payment	no

File Listing:

Document Number	Document Description	File Name	File Size(Bytes)/ Message Digest	Multi Part /.zip	Pages (if appl.)
1	Rescind Nonpublication Request for Pre Grant Pub	S0123US1_RescissionOfPreviousNonpublicationRequest.pdf	165392 54db31f3622a8308687e913831f6241cd2ad435e	no	2

Warnings:

Information:

Total Files Size (in bytes):	165392

This Acknowledgement Receipt evidences receipt on the noted date by the USPTO of the indicated documents, characterized by the applicant, and including page counts, where applicable. It serves as evidence of receipt similar to a Post Card, as described in MPEP 503.

New Applications Under 35 U.S.C. 111
If a new application is being filed and the application includes the necessary components for a filing date (see 37 CFR 1.53(b)-(d) and MPEP 506), a Filing Receipt (37 CFR 1.54) will be issued in due course and the date shown on this Acknowledgement Receipt will establish the filing date of the application.

National Stage of an International Application under 35 U.S.C. 371
If a timely submission to enter the national stage of an international application is compliant with the conditions of 35 U.S.C. 371 and other applicable requirements a Form PCT/DO/EO/903 indicating acceptance of the application as a national stage submission under 35 U.S.C. 371 will be issued in addition to the Filing Receipt, in due course.

New International Application Filed with the USPTO as a Receiving Office
If a new international application is being filed and the international application includes the necessary components for an international filing date (see PCT Article 11 and MPEP 1810), a Notification of the International Application Number and of the International Filing Date (Form PCT/RO/105) will be issued in due course, subject to prescriptions concerning national security, and the date shown on this Acknowledgement Receipt will establish the international filing date of the application.

UNITED STATES PATENT AND TRADEMARK OFFICE

UNITED STATES DEPARTMENT OF COMMERCE
United States Patent and Trademark Office
Address: COMMISSIONER FOR PATENTS
P.O. Box 1450
Alexandria, Virginia 22313-1450
www.uspto.gov

APPLICATION NUMBER	FILING OR 371(C) DATE	FIRST NAMED APPLICANT	ATTY. DOCKET NO./TITLE
13/495,577	06/13/2012	Peter John COUSINS	10031.004210

CONFIRMATION NO. 3380

74254
Okamoto & Benedicto LLP
P.O. Box 641330
San Jose, CA 95164-1330

NONPUBLICATION RESCISSION LETTER

OC000000064736102

Date Mailed: 11/04/2013

Communication Regarding Rescission Of Nonpublication Request and/or Notice of Foreign Filing

Applicant's rescission of the previously-filed nonpublication request and/or notice of foreign filing is acknowledged. The paper has been reflected in the Patent and Trademark Office's (USPTO's) computer records so that the earliest possible projected publication date can be assigned.

The projected publication date is 02/06/2014.

If applicant rescinded the nonpublication request before or on the date of "foreign filing,"[1] then no notice of foreign filing is required.

If applicant foreign filed the application after filing the above application and before filing the rescission, and the rescission did not also include a notice of foreign filing, then a notice of foreign filing (not merely a rescission) is required to be filed within 45 days of the date of foreign filing. See 35 U.S.C. § 122(b)(2)(B)(iii), and Clarification of the United States Patent and Trademark Office's Interpretation of the Provisions of 35 U.S.C. § 122(b)(2)(B)(ii)-(iv), 1272 Off. Gaz. Pat. Office 22 (July 1, 2003).

If a notice of foreign filing is required and is not filed within 45 days of the date of foreign filing, then the application becomes abandoned pursuant to 35 U.S.C. § 122(b)(2)(B)(iii). In this situation, applicant should either file a petition to revive or notify the Office that the application is abandoned. See 37 CFR 1.137(f). Any such petition to revive will be forwarded to the Office of Petitions for a decision. Note that the filing of the petition will not operate to stay any period of reply that may be running against the application.

Questions regarding petitions to revive should be directed to the Office of Petitions at (571) 272-3282.

[1] Note, for purpose of this notice, that "foreign filing" means "filing an application directed to the same invention in another country, or under a multilateral international agreement, that requires publication of applications 18 months after filing".

/byemane/

Office of Data Management, Application Assistance Unit (571) 272-4000, or (571) 272-4200, or 1-888-786-0101

UNITED STATES PATENT AND TRADEMARK OFFICE

UNITED STATES DEPARTMENT OF COMMERCE
United States Patent and Trademark Office
Address: COMMISSIONER FOR PATENTS
P.O. Box 1450
Alexandria, Virginia 22313-1450
www.uspto.gov

APPLICATION NO.	FILING DATE	FIRST NAMED INVENTOR	ATTORNEY DOCKET NO.	CONFIRMATION NO.
13/495,577	06/13/2012	Peter John COUSINS	10031.004210	3380

74254 7590 12/16/2013
Okamoto & Benedicto LLP
P.O. Box 641330
San Jose, CA 95164-1330

EXAMINER
PILLAY, DEVINA

ART UNIT	PAPER NUMBER
1755	

MAIL DATE	DELIVERY MODE
12/16/2013	PAPER

Please find below and/or attached an Office communication concerning this application or proceeding.

The time period for reply, if any, is set in the attached communication.

Applicant-Initiated Interview Summary	Application No.	Applicant(s)	
	13/495,577	COUSINS, PETER JOHN	
	Examiner	Art Unit	
	DEVINA PILLAY	1755	

All participants (applicant, applicant's representative, PTO personnel):

(1) *DEVINA PILLAY*. (3)_____.

(2) *Patrick Benedicto*. (4)_____.

Date of Interview: *12 December 2013*.

Type: ☒ Telephonic ☐ Video Conference
☐ Personal [copy given to: ☐ applicant ☐ applicant's representative]

Exhibit shown or demonstration conducted: ☐ Yes ☒ No.
If Yes, brief description: _____.

Issues Discussed ☐101 ☐112 ☐102 ☒103 ☐Others
(For each of the checked box(es) above, please describe below the issue and detailed description of the discussion)

Claim(s) discussed: *9,21 and 28*.

Identification of prior art discussed: *Meier (US 6,262,359) Smith (US 6,998,288) and Lindholm (Heavily doped polysilicon solar cells)* .

Substance of Interview
(For each issue discussed, provide a detailed description and indicate if agreement was reached. Some topics may include: identification or clarification of a reference or a portion thereof, claim interpretation, proposed amendments, arguments of any applied references etc...)

Examiner has found that Attorney Benedicto's arguments with respect to the 103 rejection of Meier in view Lindholm of claims 9, 11, 15, 21, 22, 24, 27, 29, 30, and 32 to be persuasive and the rejection is withdrawn.

However, the 103 rejection of Smith in view of Lindholm still applies to claims 9-16 and 13-32. Furthermore the three double patenting rejections (US 7,468,485 7,633,006 8,207,444) involving claims 9-16 and 21-32 also still apply.

Examiner found the the proposed amendment filed 10/17/2013 would appear to overcome the 103 rejection of Smith in view of Lindholm. However, further search and consideration is needed .

Applicant recordation instructions: The formal written reply to the last Office action must include the substance of the interview. (See MPEP section 713.04). If a reply to the last Office action has already been filed, applicant is given a non-extendable period of the longer of one month or thirty days from this interview date, or the mailing date of this interview summary form, whichever is later, to file a statement of the substance of the interview

Examiner recordation instructions: Examiners must summarize the substance of any interview of record. A complete and proper recordation of the substance of an interview should include the items listed in MPEP 713.04 for complete and proper recordation including the identification of the general thrust of each argument or issue discussed, a general indication of any other pertinent matters discussed regarding patentability and the general results or outcome of the interview, to include an indication as to whether or not agreement was reached on the issues raised.

☐ Attachment

/DEVINA PILLAY/ Primary Examiner, Art Unit 1755	

Summary of Record of Interview Requirements

Manual of Patent Examining Procedure (MPEP), Section 713.04, Substance of Interview Must be Made of Record
A complete written statement as to the substance of any face-to-face, video conference, or telephone interview with regard to an application must be made of record in the application whether or not an agreement with the examiner was reached at the interview.

Title 37 Code of Federal Regulations (CFR) § 1.133 Interviews
Paragraph (b)

In every instance where reconsideration is requested in view of an interview with an examiner, a complete written statement of the reasons presented at the interview as warranting favorable action must be filed by the applicant. An interview does not remove the necessity for reply to Office action as specified in §§ 1.111, 1.135. (35 U.S.C. 132)

37 CFR §1.2 Business to be transacted in writing.
All business with the Patent or Trademark Office should be transacted in writing. The personal attendance of applicants or their attorneys or agents at the Patent and Trademark Office is unnecessary. The action of the Patent and Trademark Office will be based exclusively on the written record in the Office. No attention will be paid to any alleged oral promise, stipulation, or understanding in relation to which there is disagreement or doubt.

The action of the Patent and Trademark Office cannot be based exclusively on the written record in the Office if that record is itself incomplete through the failure to record the substance of interviews.

It is the responsibility of the applicant or the attorney or agent to make the substance of an interview of record in the application file, unless the examiner indicates he or she will do so. It is the examiner's responsibility to see that such a record is made and to correct material inaccuracies which bear directly on the question of patentability.

Examiners must complete an Interview Summary Form for each interview held where a matter of substance has been discussed during the interview by checking the appropriate boxes and filling in the blanks. Discussions regarding only procedural matters, directed solely to restriction requirements for which interview recordation is otherwise provided for in Section 812.01 of the Manual of Patent Examining Procedure, or pointing out typographical errors or unreadable script in Office actions or the like, are excluded from the interview recordation procedures below. Where the substance of an interview is completely recorded in an Examiners Amendment, no separate Interview Summary Record is required.

The Interview Summary Form shall be given an appropriate Paper No., placed in the right hand portion of the file, and listed on the "Contents" section of the file wrapper. In a personal interview, a duplicate of the Form is given to the applicant (or attorney or agent) at the conclusion of the interview. In the case of a telephone or video-conference interview, the copy is mailed to the applicant's correspondence address either with or prior to the next official communication. If additional correspondence from the examiner is not likely before an allowance or if other circumstances dictate, the Form should be mailed promptly after the interview rather than with the next official communication.

The Form provides for recordation of the following information:
- Application Number (Series Code and Serial Number)
- Name of applicant
- Name of examiner
- Date of interview
- Type of interview (telephonic, video-conference, or personal)
- Name of participant(s) (applicant, attorney or agent, examiner, other PTO personnel, etc.)
- An indication whether or not an exhibit was shown or a demonstration conducted
- An identification of the specific prior art discussed
- An indication whether an agreement was reached and if so, a description of the general nature of the agreement (may be by attachment of a copy of amendments or claims agreed as being allowable). Note: Agreement as to allowability is tentative and does not restrict further action by the examiner to the contrary.
- The signature of the examiner who conducted the interview (if Form is not an attachment to a signed Office action)

It is desirable that the examiner orally remind the applicant of his or her obligation to record the substance of the interview of each case. It should be noted, however, that the Interview Summary Form will not normally be considered a complete and proper recordation of the interview unless it includes, or is supplemented by the applicant or the examiner to include, all of the applicable items required below concerning the substance of the interview.

A complete and proper recordation of the substance of any interview should include at least the following applicable items:
1) A brief description of the nature of any exhibit shown or any demonstration conducted,
2) an identification of the claims discussed,
3) an identification of the specific prior art discussed,
4) an identification of the principal proposed amendments of a substantive nature discussed, unless these are already described on the Interview Summary Form completed by the Examiner,
5) a brief identification of the general thrust of the principal arguments presented to the examiner,
   (The identification of arguments need not be lengthy or elaborate. A verbatim or highly detailed description of the arguments is not required. The identification of the arguments is sufficient if the general nature or thrust of the principal arguments made to the examiner can be understood in the context of the application file. Of course, the applicant may desire to emphasize and fully describe those arguments which he or she feels were or might be persuasive to the examiner.)
6) a general indication of any other pertinent matters discussed, and
7) if appropriate, the general results or outcome of the interview unless already described in the Interview Summary Form completed by the examiner.

Examiners are expected to carefully review the applicant's record of the substance of an interview. If the record is not complete and accurate, the examiner will give the applicant an extendable one month time period to correct the record.

Examiner to Check for Accuracy

If the claims are allowable for other reasons of record, the examiner should send a letter setting forth the examiner's version of the statement attributed to him or her. If the record is complete and accurate, the examiner should place the indication, "Interview Record OK" on the paper recording the substance of the interview along with the date and the examiner's initials.

First Action Interview Office Action Summary	Application No. 13/495,577	Applicant(s) COUSINS, PETER JOHN	
	Examiner DEVINA PILLAY	Art Unit 1755	AIA (First Inventor to File) Status No

The MAILING OR NOTIFICATION DATE of this communication appears on the cover sheet with the correspondence address.

THE SHORTENED STATUTORY PERIOD FOR REPLY IS SET TO EXPIRE **TWO MONTHS** FROM THE MAILING OR NOTIFICATION DATE OF THIS COMMUNICATION.

This time period for reply is extendable under 37 CFR 1.136(a) for only TWO additional MONTHS.

☐ Applicant's request to not have a first-action interview is acknowledged (or the time period for reply set forth in the Pre-Interview Communication has expired and the Office did not receive any reply).

Status

1) ☒ Responsive to communication(s) filed on *06/13/2012* and interview conducted on _____.
   ☐ A declaration(s)/affidavit(s) under **37 CFR 1.130(b)** was/were filed on _____.

2) ☐ Since this application is in condition for allowance except for formal matters, prosecution as to the merits is closed in accordance with the practice under *Ex parte Quayle*, 1935 C.D. 11, 453 O.G. 213.

Disposition of Claims

3) ☒ Claim(s) *9-16 and 21-32* is/are pending in the application.
   3a) Of the above claim(s) _____ is/are withdrawn from consideration.

4) ☐ Claim(s) _____ is/are allowed.

5) ☒ Claim(s) *9-16 and 21-32* is/are rejected.

6) ☐ Claim(s) _____ is/are objected to.

7) ☐ Claim(s) _____ are subject to restriction and/or election requirement.

Application Papers

8) ☐ The specification is objected to by the Examiner.

9) ☐ The drawing(s) filed on _____ is/are: a) ☐ accepted or b) ☐ objected to by the Examiner.

Applicant may not request that any objection to the drawing(s) be held in abeyance. See 37 CFR 1.85(a).
Replacement drawing sheet(s) including the correction is required if the drawing(s) is objected to. See 37 CFR 1.121(d).

Priority under 35 U.S.C. § 119

10) ☐ Acknowledgment is made of a claim for foreign priority under 35 U.S.C. § 119(a)-(d) or (f).
   a) ☐ All b) ☐ Some * c) ☐ None of:
   1. ☐ Certified copies of the priority documents have been received.
   2. ☐ Certified copies of the priority documents have been received in Application No. _____.
   3. ☐ Copies of the certified copies of the priority documents have been received in this National Stage application from the International Bureau (PCT Rule 17.2(a)).

*See the attached detailed Office action for a list of the certified copies not received.

Contact Information

Examiner's Telephone Number: (571)270-1180

Examiner's Typical Work Schedule: Monday thru Friday 7:30am -5:00pm (EST). Examiner Fax Number is (571)-270-2180

Supervisor's Name: Jonathan J. Johnson

Supervisor's Telephone Number: 571-272-1177

Attachment(s)

1) ☐ Notice of References Cited (PTO-892)

2) ☐ Information Disclosure Statement(s) (PTO/SB/08a and/or PTO/SB/08b) Paper No(s)/Mail Date _____.

3) ☒ Interview Summary (PTO-413) Paper No(s)/Mail Date. *20131212-A* .

4) ☐ Other: _____.

First Action Interview Office Action Summary	Application No. 13/495,577	Applicant(s) COUSINS, PETER JOHN	
	Examiner DEVINA PILLAY	Art Unit 1755	AIA (First Inventor to File) Status No

Notification of Rejection(s) and/or Objection(s)

#	Claim(s)	Reference(s) (if applicable)	Rejection Statutory Basis	Brief Explanation of Rejection
1				
3	9-16 and 21-32	D, U	103 (a)	D discloses (see Figs. 1-7) forming an oxide over a back surface (edges) of a silicon substrate (102) and discloses additional layers (104) which form emitter layers (C3/L55-C4/L5) and a capping layer.
	9-16 and 21-32	E, F, G	Double Patenting	The structure disclosed in claims 9-16 and 21-32 are substantially recited by references E, F and G.

Expanded Discussion/Commentary

3		D discloses ARC layer (C4/L1-10) Lindholm discloses a heavily doped polysilicon emitter layer and discloses that it reduces recombination velocity of minority carriers. It would have been obvious to use the polysilicon emitter instead of the doped homojunction region.

DATE: 12 December, 2013	/DEVINA PILLAY/ Primary Examiner, Art Unit 1755	

Applicant-Initiated Interview Summary	Application No.	Applicant(s)	
	13/495,577	COUSINS, PETER JOHN	
	Examiner	Art Unit	
	DEVINA PILLAY	1755	

All participants (applicant, applicant's representative, PTO personnel):

(1) *DEVINA PILLAY*. (3)_____.

(2) *Patrick Benedicto*. (4)_____.

Date of Interview: *12 December 2013*.

Type: ☒ Telephonic ☐ Video Conference
☐ Personal [copy given to: ☐ applicant ☐ applicant's representative]

Exhibit shown or demonstration conducted: ☐ Yes ☒ No.
If Yes, brief description: _____.

Issues Discussed ☐101 ☐112 ☐102 ☒103 ☐Others
(For each of the checked box(es) above, please describe below the issue and detailed description of the discussion)

Claim(s) discussed: *9,21 and 28*.

Identification of prior art discussed: *Meier (US 6,262,359) Smith (US 6,998,288) and Lindholm (Heavily doped polysilicon solar cells)* .

Substance of Interview
(For each issue discussed, provide a detailed description and indicate if agreement was reached. Some topics may include: identification or clarification of a reference or a portion thereof, claim interpretation, proposed amendments, arguments of any applied references etc...)

Examiner has found that Attorney Benedicto's arguments with respect to the 103 rejection of Meier in view Lindholm of claims 9, 11, 15, 21, 22, 24, 27, 29, 30, and 32 to be persuasive and the rejection is withdrawn.

However, the 103 rejection of Smith in view of Lindholm still applies to claims 9-16 and 13-32. Furthermore the three double patenting rejections (US 7,468,485 7,633,006 8,207,444) involving claims 9-16 and 21-32 also still apply.

Examiner found the the proposed amendment filed 10/17/2013 would appear to overcome the 103 rejection of Smith in view of Lindholm. However, further search and consideration is needed .

Applicant recordation instructions: The formal written reply to the last Office action must include the substance of the interview. (See MPEP section 713.04). If a reply to the last Office action has already been filed, applicant is given a non-extendable period of the longer of one month or thirty days from this interview date, or the mailing date of this interview summary form, whichever is later, to file a statement of the substance of the interview

Examiner recordation instructions: Examiners must summarize the substance of any interview of record. A complete and proper recordation of the substance of an interview should include the items listed in MPEP 713.04 for complete and proper recordation including the identification of the general thrust of each argument or issue discussed, a general indication of any other pertinent matters discussed regarding patentability and the general results or outcome of the interview, to include an indication as to whether or not agreement was reached on the issues raised.

☐ Attachment

/DEVINA PILLAY/ Primary Examiner, Art Unit 1755	

Summary of Record of Interview Requirements

Manual of Patent Examining Procedure (MPEP), Section 713.04, Substance of Interview Must be Made of Record
A complete written statement as to the substance of any face-to-face, video conference, or telephone interview with regard to an application must be made of record in the application whether or not an agreement with the examiner was reached at the interview.

Title 37 Code of Federal Regulations (CFR) § 1.133 Interviews
Paragraph (b)

In every instance where reconsideration is requested in view of an interview with an examiner, a complete written statement of the reasons presented at the interview as warranting favorable action must be filed by the applicant. An interview does not remove the necessity for reply to Office action as specified in §§ 1.111, 1.135. (35 U.S.C. 132)

37 CFR §1.2 Business to be transacted in writing.
All business with the Patent or Trademark Office should be transacted in writing. The personal attendance of applicants or their attorneys or agents at the Patent and Trademark Office is unnecessary. The action of the Patent and Trademark Office will be based exclusively on the written record in the Office. No attention will be paid to any alleged oral promise, stipulation, or understanding in relation to which there is disagreement or doubt.

The action of the Patent and Trademark Office cannot be based exclusively on the written record in the Office if that record is itself incomplete through the failure to record the substance of interviews.

It is the responsibility of the applicant or the attorney or agent to make the substance of an interview of record in the application file, unless the examiner indicates he or she will do so. It is the examiner's responsibility to see that such a record is made and to correct material inaccuracies which bear directly on the question of patentability.

Examiners must complete an Interview Summary Form for each interview held where a matter of substance has been discussed during the interview by checking the appropriate boxes and filling in the blanks. Discussions regarding only procedural matters, directed solely to restriction requirements for which interview recordation is otherwise provided for in Section 812.01 of the Manual of Patent Examining Procedure, or pointing out typographical errors or unreadable script in Office actions or the like, are excluded from the interview recordation procedures below. Where the substance of an interview is completely recorded in an Examiners Amendment, no separate Interview Summary Record is required.

The Interview Summary Form shall be given an appropriate Paper No., placed in the right hand portion of the file, and listed on the "Contents" section of the file wrapper. In a personal interview, a duplicate of the Form is given to the applicant (or attorney or agent) at the conclusion of the interview. In the case of a telephone or video-conference interview, the copy is mailed to the applicant's correspondence address either with or prior to the next official communication. If additional correspondence from the examiner is not likely before an allowance or if other circumstances dictate, the Form should be mailed promptly after the interview rather than with the next official communication.

The Form provides for recordation of the following information:
- Application Number (Series Code and Serial Number)
- Name of applicant
- Name of examiner
- Date of interview
- Type of interview (telephonic, video-conference, or personal)
- Name of participant(s) (applicant, attorney or agent, examiner, other PTO personnel, etc.)
- An indication whether or not an exhibit was shown or a demonstration conducted
- An identification of the specific prior art discussed
- An indication whether an agreement was reached and if so, a description of the general nature of the agreement (may be by attachment of a copy of amendments or claims agreed as being allowable). Note: Agreement as to allowability is tentative and does not restrict further action by the examiner to the contrary.
- The signature of the examiner who conducted the interview (if Form is not an attachment to a signed Office action)

It is desirable that the examiner orally remind the applicant of his or her obligation to record the substance of the interview of each case. It should be noted, however, that the Interview Summary Form will not normally be considered a complete and proper recordation of the interview unless it includes, or is supplemented by the applicant or the examiner to include, all of the applicable items required below concerning the substance of the interview.

A complete and proper recordation of the substance of any interview should include at least the following applicable items:
1) A brief description of the nature of any exhibit shown or any demonstration conducted,
2) an identification of the claims discussed,
3) an identification of the specific prior art discussed,
4) an identification of the principal proposed amendments of a substantive nature discussed, unless these are already described on the Interview Summary Form completed by the Examiner,
5) a brief identification of the general thrust of the principal arguments presented to the examiner,
   (The identification of arguments need not be lengthy or elaborate. A verbatim or highly detailed description of the arguments is not required. The identification of the arguments is sufficient if the general nature or thrust of the principal arguments made to the examiner can be understood in the context of the application file. Of course, the applicant may desire to emphasize and fully describe those arguments which he or she feels were or might be persuasive to the examiner.)
6) a general indication of any other pertinent matters discussed, and
7) if appropriate, the general results or outcome of the interview unless already described in the Interview Summary Form completed by the examiner.

Examiners are expected to carefully review the applicant's record of the substance of an interview. If the record is not complete and accurate, the examiner will give the applicant an extendable one month time period to correct the record.

Examiner to Check for Accuracy

If the claims are allowable for other reasons of record, the examiner should send a letter setting forth the examiner's version of the statement attributed to him or her. If the record is complete and accurate, the examiner should place the indication, "Interview Record OK" on the paper recording the substance of the interview along with the date and the examiner's initials.

Docket No. 10031.004210
February 3, 2014

IN THE UNITED STATES PATENT AND TRADEMARK OFFICE

In re Application of:

Peter John COUSINS

Application No.: 13/495,577 Examiner: PILLAY, DEVINA

Filing Date: June 13, 2012 Art Unit: 1755

Title: FRONT CONTACT SOLAR CELL WITH FORMED EMITTER

AMENDMENT

INTRODUCTORY COMMENTS

This paper is responsive to the First Action Interview Office Action Summary mailed on December 16, 2013 ("last office action").

Please amend the above-identified application as follows.

AMENDMENTS TO THE SPECIFICATION

A. Please insert the following section on page 1, line 8 of the specification, after the "REFERENCE TO RELATED APPLICATION" and before the "BACKGROUND OF THE INVENTION".

STATEMENT REGARDING FEDERALLY SPONSORED RESEARCH OR DEVELOPMENT

The invention described herein was made with Governmental support under contract number DE-FC36-07GO17043 awarded by the United States Department of Energy. The Government may have certain rights in the invention.

B. Please replace the paragraph beginning on page 4, line 7 with the following paragraph.

In the example of FIG. 1, the solar cell 100 includes a backside junction formed by a P-type doped polysilicon emitter 108 serving as a P-type diffusion region and an N-type silicon substrate 101 ~~servings~~ serving as an N-type diffusion region. The N-type silicon substrate 101 may comprise a long lifetime (e.g., 2 to 5ms) N-type silicon wafer and may have a thickness of about 100 to 250 μm as measured from the backside surface to a tip of the textured front side surface of the substrate. The front side surface of the substrate 101 is randomly textured (labeled as 113) and includes N-type doped regions 105 and 106 formed in the substrate. The N-type doped region 105 provides low front surface recombination and improves lateral conductivity whilst not compromising the blue response of the solar cell. The region 106, which may be a phosphorus diffusion, provides low contact resistance and minimizes contact recombination. The region 106 is also referred to as an "N-dot" because, in one embodiment, it forms a dot-shape to minimize the area of heavily diffused regions on the front surface. The N-type doped region 105 may have a sheet resistance of 100 to 500 Ω/sq, whilst the n-type doped region 106 may have a sheet resistance of 10 to 50 Ω/sq.

C. Please replace the paragraph beginning on page 8, line 17 with the following paragraph:

> In FIG. 4E, exposed regions on the front surface of the substrate 101 <u>are</u> ~~is~~ randomly textured to form the textured surface 113. In one embodiment, the front surface of the substrate 101 is textured with random pyramids using a wet etch process comprising potassium hydroxide and isopropyl alcohol.

PROPOSED AMENDMENTS TO THE CLAIMS

1-8. (canceled)

9. (currently amended) A method of fabricating a solar cell having a front side facing the sun to collect solar radiation during normal operation and a backside opposite the front side, the method comprising:

forming a layer of polysilicon over a back surface of an N-type silicon substrate on the backside of the solar cell;

forming a P-type dopant source over the layer of polysilicon;

forming a capping layer over the P-type dopant source; and

diffusing P-type dopants from the P-type dopant source to the layer of polysilicon to form a backside junction with the N-type silicon substrate; ~~and~~

diffusing N-type dopants into a front surface of the N-type silicon substrate; and

forming a metal contact on the front side of the solar cell, wherein the metal contact is electrically coupled to the N-type silicon substrate.

10. (original) The method of claim 9 wherein the P-type dopant source comprises borosilicate glass.

11. (original) The method of claim 9 wherein diffusing N-type dopants into the front surface of the N-type silicon substrate includes forming an N-type dopant source over the N-type silicon substrate and diffusing N-type dopants from the N-type dopants source into the N-type silicon substrate.

12. (original) The method of claim 11 wherein the N-type dopant source comprises phosphorus doped silicon dioxide.

13. (original) The method of claim 9 further comprising:

texturing the front surface of the N-type silicon substrate; and

forming an antireflective layer over the textured front surface of the N-type silicon substrate.

14. (original) The method of claim 13 wherein the antireflective layer comprises silicon nitride.

15. (original) The method of claim 9 wherein the diffusion of P-type dopants from the P-type dopant source to the layer of polysilicon and the diffusion of N-type dopants into the front surface of the N-type silicon substrate are performed in situ.

16. (original) The method of claim 9 wherein the capping layer comprises undoped silicon dioxide.

17-20. (canceled)

21. (Currently amended) A method of fabricating a solar cell comprising:

forming a layer of polysilicon over a back surface of a silicon substrate;

forming a first dopant source layer over the layer of polysilicon;

diffusing dopants from the first dopant source layer to the layer of polysilicon to form a backside junction with the silicon substrate; ~~and~~

diffusing dopants into a front surface of the silicon substrate, the front surface of the silicon substrate facing the sun during normal operation; and

forming a metal contact on the front surface of the silicon substrate, wherein the metal contact is electrically coupled to the silicon substrate.

22. (Previously presented) The method of claim 21 wherein the first dopant source layer comprises P-type dopants.

23. (Previously presented) The method of claim 21 wherein the first dopant source layer comprises borosilicate glass.

24. (Previously presented) The method of claim 21 wherein diffusing dopants into the front surface of the silicon substrate comprises forming a second dopant source layer over the silicon substrate and diffusing dopants from the second dopant source layer into the silicon substrate.

25. (Previously presented) The method of claim 24 wherein the second dopant source layer comprises phosphorus doped silicon dioxide.

26. (Previously presented) The method of claim 21 further comprising:

texturing the front surface of the silicon substrate; and

forming an antireflective layer over the textured front surface of the silicon substrate.

27. (Previously presented) The method of claim 21 wherein the diffusion of dopants from the first dopant source layer to the layer of polysilicon and the diffusion of dopants into the front surface of the silicon substrate are performed in situ.

28. (Currently amended) A method of fabricating a solar cell comprising:

forming an oxide layer over a back surface of a silicon substrate;

forming a layer of polysilicon over the oxide layer;

diffusing dopants into the layer of polysilicon to form a backside junction with the silicon substrate; ~~and~~

diffusing dopants into a front surface of the silicon substrate, the front surface of the silicon substrate facing the sun during normal operation; and

forming a metal contact on the front surface of the silicon substrate, wherein the metal contact is electrically coupled to the silicon substrate.

29. (Currently amended) The method of claim 28 ~~21~~ wherein diffusing dopants into the layer of polysilicon to form the backside junction with the silicon substrate comprises:

forming a first dopant source layer over the layer of polysilicon; and

diffusing dopants from the first dopant source layer into the layer of polysilicon.

30. (Currently amended) The method of claim 28 ~~21~~ wherein diffusing dopants into the front surface of the silicon substrate comprises forming a second dopant source layer over the silicon substrate and diffusing dopants from the second dopant source layer into the silicon substrate.

31. (Currently amended) The method of claim 28 ~~21~~ further comprising:

texturing the front surface of the silicon substrate.

32. (Previously presented) The method of claim 31 further comprising:

forming an antireflective layer over the textured front surface of the silicon substrate.

ARGUMENTS

Claims 9-16 and 21-32 remain in the application and stand rejected. Reconsideration of the rejection is respectfully requested in light of the following reasons.

Substance of Examiner Interview

On December 12, 2013, the Examiner and the undersigned conducted a telephone interview to discuss claims 9, 21, and 28 in light of US 6,262,359 to Meier et al., Lindholm, *Heavily Doped Polysilicon-Contact Solar Cells*, and US 6,998,288 to Smith et al. The Examiner agreed that claims 9, 11, 15, 21, 22, 24, 27, 29, 30, and 32 are patentable over the combination of Meier and Lindholm for reasons explained in the response to the First Action Interview Communication. The Examiner also agreed that the proposed amendment overcomes the rejection of claims 9-16 and 13-32, but further search is required.

Claim Rejections – 35 U.S.C. §103

Claims 9-16 and 21-32 are rejected under pre-AIA 35 U.S.C. §103(a) as being unpatentable over US 6,998,288 to Smith et al. ("Smith") in view of Lindholm, *Heavily Doped Polysilicon-Contact Solar Cells* ("Lindholm"). The rejection is respectfully traversed.

Claim 9 is patentable over the combination of Smith and Lindholm at least for reciting: "forming a metal on the front side of the solar cell, wherein the metal contact is electrically coupled to the N-type silicon substrate." It is respectfully submitted that Smith discloses a backside contact solar cell. Accordingly, Smith does not disclose a metal contact that connects to the substrate from the front side of the solar cell. Lindholm does not add to Smith in this regard.

Claims 10-16 depend from claim 9, and are thus patentable over the combination of Smith and Lindholm at least for the same reasons that claim 9 is patentable.

Claims 21 and 28 are similarly patentable over the combination of Smith and Lindholm. Claims 22-27 and 29-32 are patentable at least for depending from patentable claims 21 and 28, respectively.

Double Patenting

Applicant will consider filing a terminal disclaimer to obviate the Double Patenting rejection as to US 8,207,444 to Cousins.

Applicant respectfully traverses the Double Patenting rejection as to US 7,468,485 and US 7,633,006.

Respectfully submitted,

Dated: February 3, 2014

/Patrick Benedicto/

Patrick D. Benedicto, Reg. No. 40,909
Okamoto & Benedicto LLP
P.O. Box 641330
San Jose, CA 95164
Tel.: (408)436-2110
Fax.: (408)436-2114

Electronic Acknowledgement Receipt

EFS ID:	18096944
Application Number:	13495577
International Application Number:	
Confirmation Number:	3380
Title of Invention:	FRONT CONTACT SOLAR CELL WITH FORMED EMITTER
First Named Inventor/Applicant Name:	Peter John COUSINS
Customer Number:	74254
Filer:	Patrick D. Benedicto/jina mangaoang
Filer Authorized By:	Patrick D. Benedicto
Attorney Docket Number:	10031.004210
Receipt Date:	03-FEB-2014
Filing Date:	13-JUN-2012
Time Stamp:	15:34:01
Application Type:	Utility under 35 USC 111(a)

Payment information:

Submitted with Payment	no

File Listing:

Document Number	Document Description	File Name	File Size(Bytes)/ Message Digest	Multi Part /.zip	Pages (if appl.)
1		S0123US1_ROAmailed16Dec2013.pdf	503010 db4d48573a9b89d3aa9ee2d5a29e6af81b35a10f	yes	9

	Multipart Description/PDF files in .zip description		
	Document Description	**Start**	**End**
	Amendment/Req. Reconsideration-After Non-Final Reject	1	1
	Specification	2	3
	Claims	4	7
	Applicant Arguments/Remarks Made in an Amendment	8	9
Warnings:			
Information:			
	Total Files Size (in bytes):	503010	

This Acknowledgement Receipt evidences receipt on the noted date by the USPTO of the indicated documents, characterized by the applicant, and including page counts, where applicable. It serves as evidence of receipt similar to a Post Card, as described in MPEP 503.

<u>New Applications Under 35 U.S.C. 111</u>
If a new application is being filed and the application includes the necessary components for a filing date (see 37 CFR 1.53(b)-(d) and MPEP 506), a Filing Receipt (37 CFR 1.54) will be issued in due course and the date shown on this Acknowledgement Receipt will establish the filing date of the application.

<u>National Stage of an International Application under 35 U.S.C. 371</u>
If a timely submission to enter the national stage of an international application is compliant with the conditions of 35 U.S.C. 371 and other applicable requirements a Form PCT/DO/EO/903 indicating acceptance of the application as a national stage submission under 35 U.S.C. 371 will be issued in addition to the Filing Receipt, in due course.

<u>New International Application Filed with the USPTO as a Receiving Office</u>
If a new international application is being filed and the international application includes the necessary components for an international filing date (see PCT Article 11 and MPEP 1810), a Notification of the International Application Number and of the International Filing Date (Form PCT/RO/105) will be issued in due course, subject to prescriptions concerning national security, and the date shown on this Acknowledgement Receipt will establish the international filing date of the application.

PTO/SB/06 (09-11)
Approved for use through 1/31/2014. OMB 0651-0032
U.S. Patent and Trademark Office; U.S. DEPARTMENT OF COMMERCE
Under the Paperwork Reduction Act of 1995, no persons are required to respond to a collection of information unless it displays a valid OMB control number.

PATENT APPLICATION FEE DETERMINATION RECORD

Substitute for Form PTO-875

Application or Docket Number	Filing Date	
13/495,577	06/13/2012	☐ To be Mailed

ENTITY: ☒ LARGE ☐ SMALL ☐ MICRO

APPLICATION AS FILED – PART I

FOR	(Column 1) NUMBER FILED	(Column 2) NUMBER EXTRA	RATE ($)	FEE ($)
☐ BASIC FEE (37 CFR 1.16(a), (b), or (c))	N/A	N/A	N/A	
☐ SEARCH FEE (37 CFR 1.16(k), (i), or (m))	N/A	N/A	N/A	
☐ EXAMINATION FEE (37 CFR 1.16(o), (p), or (q))	N/A	N/A	N/A	
TOTAL CLAIMS (37 CFR 1.16(i))	minus 20 =	*	x $ =	
INDEPENDENT CLAIMS (37 CFR 1.16(h))	minus 3 =	*	x $ =	
☐ APPLICATION SIZE FEE (37 CFR 1.16(s))	If the specification and drawings exceed 100 sheets of paper, the application size fee due is $310 ($155 for small entity) for each additional 50 sheets or fraction thereof. See 35 U.S.C. 41(a)(1)(G) and 37 CFR 1.16(s).			
☐ MULTIPLE DEPENDENT CLAIM PRESENT (37 CFR 1.16(j))				
* If the difference in column 1 is less than zero, enter "0" in column 2.			TOTAL	

APPLICATION AS AMENDED – PART II

AMENDMENT 02/03/2014

	(Column 1) CLAIMS REMAINING AFTER AMENDMENT		(Column 2) HIGHEST NUMBER PREVIOUSLY PAID FOR	(Column 3) PRESENT EXTRA	RATE ($)	ADDITIONAL FEE ($)
Total (37 CFR 1.16(i))	* 20	Minus	** 20	= 0	x $80 =	0
Independent (37 CFR 1.16(h))	* 3	Minus	***3	= 0	x $420 =	0
☐ Application Size Fee (37 CFR 1.16(s))						
☐ FIRST PRESENTATION OF MULTIPLE DEPENDENT CLAIM (37 CFR 1.16(j))						
					TOTAL ADD'L FEE	0

AMENDMENT

	(Column 1) CLAIMS REMAINING AFTER AMENDMENT		(Column 2) HIGHEST NUMBER PREVIOUSLY PAID FOR	(Column 3) PRESENT EXTRA	RATE ($)	ADDITIONAL FEE ($)
Total (37 CFR 1.16(i))	*	Minus	**	=	x $ =	
Independent (37 CFR 1.16(h))	*	Minus	***	=	x $ =	
☐ Application Size Fee (37 CFR 1.16(s))						
☐ FIRST PRESENTATION OF MULTIPLE DEPENDENT CLAIM (37 CFR 1.16(j))						
					TOTAL ADD'L FEE	

* If the entry in column 1 is less than the entry in column 2, write "0" in column 3.
** If the "Highest Number Previously Paid For" IN THIS SPACE is less than 20, enter "20".
*** If the "Highest Number Previously Paid For" IN THIS SPACE is less than 3, enter "3".
The "Highest Number Previously Paid For" (Total or Independent) is the highest number found in the appropriate box in column 1.

LIE
/ANTHONY WILLIAMS/

This collection of information is required by 37 CFR 1.16. The information is required to obtain or retain a benefit by the public which is to file (and by the USPTO to process) an application. Confidentiality is governed by 35 U.S.C. 122 and 37 CFR 1.14. This collection is estimated to take 12 minutes to complete, including gathering, preparing, and submitting the completed application form to the USPTO. Time will vary depending upon the individual case. Any comments on the amount of time you require to complete this form and/or suggestions for reducing this burden, should be sent to the Chief Information Officer, U.S. Patent and Trademark Office, U.S. Department of Commerce, P.O. Box 1450, Alexandria, VA 22313-1450. DO NOT SEND FEES OR COMPLETED FORMS TO THIS ADDRESS. **SEND TO: Commissioner for Patents, P.O. Box 1450, Alexandria, VA 22313-1450.**
If you need assistance in completing the form, call 1-800-PTO-9199 and select option 2.

UNITED STATES PATENT AND TRADEMARK OFFICE

UNITED STATES DEPARTMENT OF COMMERCE
United States Patent and Trademark Office
Address: COMMISSIONER FOR PATENTS
P.O. Box 1450
Alexandria, Virginia 22313-1450
www.uspto.gov

APPLICATION NUMBER	FILING OR 371(C) DATE	FIRST NAMED APPLICANT	ATTY. DOCKET NO./TITLE
13/495,577	06/13/2012	Peter John COUSINS	10031.004210

CONFIRMATION NO. 3380

PUBLICATION NOTICE

OC000000066484071

74254
Okamoto & Benedicto LLP
P.O. Box 641330
San Jose, CA 95164-1330

Title:FRONT CONTACT SOLAR CELL WITH FORMED EMITTER

Publication No.US-2014-0038338-A1
Publication Date:02/06/2014

NOTICE OF PUBLICATION OF APPLICATION

The above-identified application will be electronically published as a patent application publication pursuant to 37 CFR 1.211, et seq. The patent application publication number and publication date are set forth above.

The publication may be accessed through the USPTO's publically available Searchable Databases via the Internet at www.uspto.gov. The direct link to access the publication is currently http://www.uspto.gov/patft/.

The publication process established by the Office does not provide for mailing a copy of the publication to applicant. A copy of the publication may be obtained from the Office upon payment of the appropriate fee set forth in 37 CFR 1.19(a)(1). Orders for copies of patent application publications are handled by the USPTO's Office of Public Records. The Office of Public Records can be reached by telephone at (703) 308-9726 or (800) 972-6382, by facsimile at (703) 305-8759, by mail addressed to the United States Patent and Trademark Office, Office of Public Records, Alexandria, VA 22313-1450 or via the Internet.

In addition, information on the status of the application, including the mailing date of Office actions and the dates of receipt of correspondence filed in the Office, may also be accessed via the Internet through the Patent Electronic Business Center at www.uspto.gov using the public side of the Patent Application Information and Retrieval (PAIR) system. The direct link to access this status information is currently http://pair.uspto.gov/. Prior to publication, such status information is confidential and may only be obtained by applicant using the private side of PAIR.

Further assistance in electronically accessing the publication, or about PAIR, is available by calling the Patent Electronic Business Center at 1-866-217-9197.

Office of Data Managment, Application Assistance Unit (571) 272-4000, or (571) 272-4200, or 1-888-786-0101

UNITED STATES PATENT AND TRADEMARK OFFICE

UNITED STATES DEPARTMENT OF COMMERCE
United States Patent and Trademark Office
Address: COMMISSIONER FOR PATENTS
P.O. Box 1450
Alexandria, Virginia 22313-1450
www.uspto.gov

APPLICATION NO.	FILING DATE	FIRST NAMED INVENTOR	ATTORNEY DOCKET NO.	CONFIRMATION NO.
13/495,577	06/13/2012	Peter John COUSINS	10031.004210	3380

74254 7590 02/26/2014
Okamoto & Benedicto LLP
P.O. Box 641330
San Jose, CA 95164-1330

EXAMINER
PILLAY, DEVINA

ART UNIT	PAPER NUMBER
1755	

MAIL DATE	DELIVERY MODE
02/26/2014	PAPER

Please find below and/or attached an Office communication concerning this application or proceeding.

The time period for reply, if any, is set in the attached communication.

Office Action Summary	Application No. 13/495,577	Applicant(s) COUSINS, PETER JOHN	
	Examiner DEVINA PILLAY	Art Unit 1755	AIA (First Inventor to File) Status No

-- The MAILING DATE of this communication appears on the cover sheet with the correspondence address --

Period for Reply

A SHORTENED STATUTORY PERIOD FOR REPLY IS SET TO EXPIRE 3 MONTHS FROM THE MAILING DATE OF THIS COMMUNICATION.

- Extensions of time may be available under the provisions of 37 CFR 1.136(a). In no event, however, may a reply be timely filed after SIX (6) MONTHS from the mailing date of this communication.
- If NO period for reply is specified above, the maximum statutory period will apply and will expire SIX (6) MONTHS from the mailing date of this communication.
- Failure to reply within the set or extended period for reply will, by statute, cause the application to become ABANDONED (35 U.S.C. § 133). Any reply received by the Office later than three months after the mailing date of this communication, even if timely filed, may reduce any earned patent term adjustment. See 37 CFR 1.704(b).

Status

1)☒ Responsive to communication(s) filed on *02/03/2014*.

☐ A declaration(s)/affidavit(s) under **37 CFR 1.130(b)** was/were filed on _____.

2a)☒ This action is **FINAL**. 2b)☐ This action is non-final.

3)☐ An election was made by the applicant in response to a restriction requirement set forth during the interview on _____; the restriction requirement and election have been incorporated into this action.

4)☐ Since this application is in condition for allowance except for formal matters, prosecution as to the merits is closed in accordance with the practice under *Ex parte Quayle*, 1935 C.D. 11, 453 O.G. 213.

Disposition of Claims*

5)☒ Claim(s) *9-16 and 21-32* is/are pending in the application.

5a) Of the above claim(s) _____ is/are withdrawn from consideration.

6)☐ Claim(s) _____ is/are allowed.

7)☒ Claim(s) *9-16 and 21-32* is/are rejected.

8)☐ Claim(s) _____ is/are objected to.

9)☐ Claim(s) _____ are subject to restriction and/or election requirement.

* If any claims have been determined allowable, you may be eligible to benefit from the **Patent Prosecution Highway** program at a participating intellectual property office for the corresponding application. For more information, please see http://www.uspto.gov/patents/init_events/pph/index.jsp or send an inquiry to PPHfeedback@uspto.gov.

Application Papers

10)☐ The specification is objected to by the Examiner.

11)☐ The drawing(s) filed on _____ is/are: a)☐ accepted or b)☐ objected to by the Examiner.

Applicant may not request that any objection to the drawing(s) be held in abeyance. See 37 CFR 1.85(a).

Replacement drawing sheet(s) including the correction is required if the drawing(s) is objected to. See 37 CFR 1.121(d).

Priority under 35 U.S.C. § 119

12)☐ Acknowledgment is made of a claim for foreign priority under 35 U.S.C. § 119(a)-(d) or (f).

Certified copies:

a)☐ All b)☐ Some** c)☐ None of the:

1.☐ Certified copies of the priority documents have been received.

2.☐ Certified copies of the priority documents have been received in Application No. _____.

3.☐ Copies of the certified copies of the priority documents have been received in this National Stage application from the International Bureau (PCT Rule 17.2(a)).

** See the attached detailed Office action for a list of the certified copies not received.

Attachment(s)

1) ☒ Notice of References Cited (PTO-892)

2) ☒ Information Disclosure Statement(s) (PTO/SB/08a and/or PTO/SB/08b) Paper No(s)/Mail Date *09/07/2012*.

3) ☐ Interview Summary (PTO-413) Paper No(s)/Mail Date. _____ .

4) ☐ Other: _____.

1. The present application is being examined under the pre-AIA first to invent provisions.

DETAILED ACTION

Specification

2. The specification filed on 02/03/2014 has been entered.

Claim Rejections - 35 USC § 103

3. The following is a quotation of pre-AIA 35 U.S.C. 103(a) which forms the basis for all obviousness rejections set forth in this Office action:

> (a) A patent may not be obtained though the invention is not identically disclosed or described as set forth in section 102 of this title, if the differences between the subject matter sought to be patented and the prior art are such that the subject matter as a whole would have been obvious at the time the invention was made to a person having ordinary skill in the art to which said subject matter pertains. Patentability shall not be negatived by the manner in which the invention was made.

4. The factual inquiries set forth in *Graham v. John Deere Co.*, 383 U.S. 1, 148 USPQ 459 (1966), that are applied for establishing a background for determining obviousness under pre-AIA 35 U.S.C. 103(a) are summarized as follows:

1. Determining the scope and contents of the prior art.
2. Ascertaining the differences between the prior art and the claims at issue.
3. Resolving the level of ordinary skill in the pertinent art.
4. Considering objective evidence present in the application indicating obviousness or nonobviousness.

5. This application currently names joint inventors. In considering patentability of the claims under pre-AIA 35 U.S.C. 103(a), the examiner presumes that the subject matter of the various claims was commonly owned at the time any inventions covered therein

were made absent any evidence to the contrary. Applicant is advised of the obligation under 37 CFR 1.56 to point out the inventor and invention dates of each claim that was not commonly owned at the time a later invention was made in order for the examiner to consider the applicability of pre-AIA 35 U.S.C. 103(c) and potential pre-AIA 35 U.S.C. 102(e), (f) or (g) prior art under pre-AIA 35 U.S.C. 103(a).

6. Claims 9-12, 16, 21-25 and 27 are rejected under pre-AIA 35 U.S.C. 103(a) as being unpatentable over Silvestre (Series resistance in double-polysilicon contacted solar cells) in view of Lindholm ("Heavily doped Polysilicon-Contact Solar Cell) in view of Smith (US 6,998,288 B1).

Regarding claims 9-12, 16, 21-25 and 27, Silvestre discloses a method of fabricating a silicon solar cell (see Fig. 1) having a front side facing the sun to collect solar radiation during normal operation and a backside opposite to the front side, the method comprising:

forming a layer of polysilicon over a back surface (p + polysilicon layer) of a silicon substrate on the backside of the solar cell ;

diffusing n-type dopants into a front surface of the silicon substrate (See Experimental section LDE); and forming a metal contact on the front side of the solar cell, wherein the metal contact is electrically couple to the silicon substrate (see Fig. 1).

Lindholme discloses that these type of contacts can be on both n-type or p-type substrate solar cells.

It would have been obvious to one of ordinary skill in the art at the time of the invention to modify the type of silicon substrate of Silvestre so that it was n-type

because as disclosed by Lindholme because polysilicon contacts are appropriate on an n-type silicon substrate.

However, Silvestre does not disclose forming a p-type dopant/n-type dopant source over the layers of polysilicon and a capping layer on each of the p-type dopant source and n-type dopant source

Smith discloses that doping of a p-type/n-type surface field can be formed by depositing a borosilicate glass dopant layer/phosphosilicate glass and covering the dopant layer with an undoped silicon oxide layer (C2/L65-C3/L30).

Smith discloses that this advantageous because it allows for one sided deposition (C2/L55-60).

It would have been obvious to one of ordinary skill in the art at the time of the to modify the method of manufacturing the solar cell of modified Silvestre by using the method of Smith because it will allow for an effective doping method for the polysilicon surface field layer contacts and allows for one sided deposition of the dopant.

7. Claims 13, 14, and 26 are rejected under pre-AIA 35 U.S.C. 103(a) as being unpatentable over Silvestre (Series resistance in double-polysilicon contacted solar cells) in view of Lindholm ("Heavily doped Polysilicon-Contact Solar Cell) in view of Smith (US 6,998,288 B1) as applied to claims 9-12, 16, 21-25 and 27 above and in further view of Meier (US 6,262,359 B1)

<u>Regarding claims 13, 14, and 26,</u> modified Silvestre discloses all of the claim limitations as set forth above.

Silvestre discloses an additional layer over the front surface but does not disclose what the layer material is (see layer of white material over interfacial oxide).

Smith discloses texturing the front surface of a solar cell.

Texturing the front surface of the solar cell allows for better light trapping which will improve solar cell efficiency.

It would have been obvious to one of ordinary skill in the art at the time of the invention to modify the front surface of the silicon wafer of modified Silvestre by texturizing the surface as disclosed by Smith because it will improve the efficiency of the solar cell.

Meier discloses that on the front side of a solar cell a silicon nitride antireflection layer (214) be supplied (see Fig. 3B, C6/L20-25).

An anti-reflective coating would decrease light reflection from the surface and allow for more light to be absorbed by the solar cell.

It would have been obvious to one of ordinary skill in the art at the time of the invention to replace the layer of material between the front metal contact and front surface of the wafer with an antireflective coating as disclosed by Meier because it is an anti-reflective coating would decrease light reflection from the surface and allow for more light to be absorbed by the solar cell.

8. **Claims 28-30 are rejected under pre-AIA 35 U.S.C. 103(a) as being unpatentable over Silvestre (Series resistance in double-polysilicon contacted solar cells) in view of Lindholm ("Heavily doped Polysilicon-Contact Solar Cell) in view of Swanson (US 5,057,439).**

Regarding claim 28, Silvestre discloses a method of fabricating a silicon solar cell (see Fig. 1) comprising:

forming a layer of polysilicon over a backside surface of the solar cell,

diffusing dopants into the layer of the polysilicon and diffusing dopants into a front surface of the silicon substrate, the front surface of the silicon substrate facing the sun during normal operation, and forming a metal contact on the front surface of the silicon substrate, wherein the metal contact is electrically coupled to the silicon substrate.

Lindholme discloses that these type of contacts can be on both n-type or p-type substrate solar cells.

It would have been obvious to one of ordinary skill in the art at the time of the invention to modify the type of silicon substrate of Silvestre so that it was n-type because as disclosed by Lindholme because polysilicon contacts are appropriate on an n-type silicon substrate.

Swanson discloses a thin silicon oxide layer (16) between a silicon substrate and polysilicon emitter contact (C2/L50-53) and naturally forms at the interface (C1/L30-46).

It would have been obvious to one of ordinary skill in the art at the time of the invention to modify the interface between the polysilcon emitter back layer and the silicon substrate of Silvestre by having a thin layer of native oxide as disclosed by Swanson because this layer naturally forms at this interface.

Regarding claims 29 and 30, modified Silvestre discloses all of the claim limitations as set forth above.

However does not disclose used doped silica glass layers to dope the polysilicon emitter layers.

Swanson discloses using doped silica glass layers to form doped polysilicon layers and that this method allows for the formation of contacts with less resistance (C3/L5-32).

It would have been obvious to one of ordinary skill in the art at the time of the invention to modify the doping of the back and front polysilicon emitter contact layers of modified Silvestre by using doped silica glass layer to dope the polysilicon emitter contact layers as disclosed by Swanson because this method allows for the formation of contacts with less resistance.

9. **Claims 31 and 32 are rejected under pre-AIA 35 U.S.C. 103(a) as being unpatentable over Silvestre (Series resistance in double-polysilicon contacted solar cells) in view of Lindholm ("Heavily doped Polysilicon-Contact Solar Cell) in view of Swanson (US 5,057,439) as applied to claims 28-30 above and in further view of Smith (US 6,998,288 B1).**

Regarding claims 31 and 32, modified Silvestre discloses all of the claim limitations as set forth above.

Silvestre discloses an additional layer over the front surface but does not disclose what the layer material is (see layer of white material over interfacial oxide).

Smith discloses texturing the front surface of a solar cell and also adding a layer of silicon nitride as an antireflection layer (C3/L30-40 and C4/L1-11).

Texturing the front surface and an antireflection layer will allow for better light absorption which will improve solar cell efficiency.

It would have been obvious to one of ordinary skill in the art at the time of the invention to modify the front surface of Silvestre by texturizing it and replacing the layer of material with an antireflection layer as disclosed by Smith because it will improve solar cell efficiency.

Double Patenting

10. The nonstatutory double patenting rejection is based on a judicially created doctrine grounded in public policy (a policy reflected in the statute) so as to prevent the unjustified or improper timewise extension of the "right to exclude" granted by a patent and to prevent possible harassment by multiple assignees. A nonstatutory double patenting rejection is appropriate where the claims at issue are not identical, but at least one examined application claim is not patentably distinct from the reference claim(s) because the examined application claim is either anticipated by, or would have been obvious over, the reference claim(s). See, e.g., *In re Berg*, 140 F.3d 1428, 46 USPQ2d 1226 (Fed. Cir. 1998); *In re Goodman*, 11 F.3d 1046, 29 USPQ2d 2010 (Fed. Cir. 1993); *In re Longi*, 759 F.2d 887, 225 USPQ 645 (Fed. Cir. 1985); *In re Van Ornum*, 686 F.2d 937, 214 USPQ 761 (CCPA 1982); *In re Vogel*, 422 F.2d 438, 164 USPQ 619 (CCPA 1970); and *In re Thorington*, 418 F.2d 528, 163 USPQ 644 (CCPA 1969).

A timely filed terminal disclaimer in compliance with 37 CFR 1.321(c) or 1.321(d) may be used to overcome an actual or provisional rejection based on a nonstatutory double patenting ground provided the reference application or patent either is shown to

be commonly owned with this application, or claims an invention made as a result of activities undertaken within the scope of a joint research agreement. A terminal disclaimer must be signed in compliance with 37 CFR 1.321(b).

The USPTO internet Web site contains terminal disclaimer forms which may be used. Please visit http://www.uspto.gov/forms/. The filing date of the application will determine what form should be used. A web-based eTerminal Disclaimer may be filled out completely online using web-screens. An eTerminal Disclaimer that meets all requirements is auto-processed and approved immediately upon submission. For more information about eTerminal Disclaimers, refer to http://www.uspto.gov/patents/process/file/efs/guidance/eTD-info-I.jsp.

11. Claims 9-16 and 21-32 are rejected on the ground of nonstatutory double patenting over claims **1-11 of U.S. Patent No. 8,207,444** since the claims, if allowed, would improperly extend the “right to exclude” already granted in the patent.

The subject matter claimed in the instant application is fully disclosed in the patent and is covered by the patent since the patent and the application are claiming common subject matter, as follows: US Patent **8,207,444** recites substantially the same method for manufacturing a solar cell with polysilicon emitter contact layers as instantly claimed.

Furthermore, there is no apparent reason why applicant was prevented from presenting claims corresponding to those of the instant application during prosecution of the application which matured into a patent. See *In re Schneller*, 397 F.2d 350, 158 USPQ 210 (CCPA 1968). See also MPEP § 804.

Response to Arguments

12. Applicant's arguments with respect to claims 9-16 and 21-32 have been considered but are moot because the arguments do not apply to any of the current rejection.

Conclusion

13. Applicant's amendment necessitated the new ground(s) of rejection presented in this Office action. Accordingly, **THIS ACTION IS MADE FINAL**. See MPEP § 706.07(a). Applicant is reminded of the extension of time policy as set forth in 37 CFR 1.136(a).

A shortened statutory period for reply to this final action is set to expire THREE MONTHS from the mailing date of this action. In the event a first reply is filed within TWO MONTHS of the mailing date of this final action and the advisory action is not mailed until after the end of the THREE-MONTH shortened statutory period, then the shortened statutory period will expire on the date the advisory action is mailed, and any extension fee pursuant to 37 CFR 1.136(a) will be calculated from the mailing date of the advisory action. In no event, however, will the statutory period for reply expire later than SIX MONTHS from the date of this final action.

Any inquiry concerning this communication or earlier communications from the examiner should be directed to DEVINA PILLAY whose telephone number is (571)270-1180. The examiner can normally be reached on Monday thru Friday 7:30am -5:00pm (EST). Examiner Fax Number is (571)-270-2180.

If attempts to reach the examiner by telephone are unsuccessful, the examiner's supervisor, Jonathan J. Johnson can be reached on 571-272-1177. The fax phone number for the organization where this application or proceeding is assigned is 571-273-8300.

Information regarding the status of an application may be obtained from the Patent Application Information Retrieval (PAIR) system. Status information for published applications may be obtained from either Private PAIR or Public PAIR. Status information for unpublished applications is available through Private PAIR only. For more information about the PAIR system, see http://pair-direct.uspto.gov. Should you have questions on access to the Private PAIR system, contact the Electronic Business Center (EBC) at 866-217-9197 (toll-free). If you would like assistance from a USPTO Customer Service Representative or access to the automated information system, call 800-786-9199 (IN USA OR CANADA) or 571-272-1000.

/DEVINA PILLAY/
Primary Examiner, Art Unit 1755

Notice of References Cited	Application/Control No. 13/495,577	Applicant(s)/Patent Under Reexamination COUSINS, PETER JOHN	
	Examiner DEVINA PILLAY	Art Unit 1755	Page 1 of 1

U.S. PATENT DOCUMENTS

*		Document Number Country Code-Number-Kind Code	Date MM-YYYY	Name	Classification
*	A	US-6,262,359	07-2001	Meier et al.	136/256
*	B	US-5,057,439	10-1991	Swanson et al.	438/98
	C	US-			
	D	US-			
	E	US-			
	F	US-			
	G	US-			
	H	US-			
	I	US-			
	J	US-			
	K	US-			
	L	US-			
	M	US-			

FOREIGN PATENT DOCUMENTS

*		Document Number Country Code-Number-Kind Code	Date MM-YYYY	Country	Name	Classification
	N					
	O					
	P					
	Q					
	R					
	S					
	T					

NON-PATENT DOCUMENTS

*		Include as applicable: Author, Title Date, Publisher, Edition or Volume, Pertinent Pages)
	U	Silvestre, "Series Resistance in Double-Polysilicon Contacted Silicon Solar Cells", IEEE, 25th PVSC Washington DC, May 1996, pgs. 497-500
	V	
	W	
	X	

*A copy of this reference is not being furnished with this Office action. (See MPEP § 707.05(a).)
Dates in MM-YYYY format are publication dates. Classifications may be US or foreign.

INFORMATION DISCLOSURE STATEMENT BY APPLICANT (**Not for submission under 37 CFR 1.99)**	Application Number	13495577
	Filing Date	2012-06-13
	First Named Inventor	Peter John Cousins
	Art Unit	
	Examiner Name	
	Attorney Docket Number	10031.004210

U.S.PATENTS						Remove
Examiner Initial*	Cite No	Patent Number	Kind Code[1]	Issue Date	Name of Patentee or Applicant of cited Document	Pages,Columns,Lines where Relevant Passages or Relevant Figures Appear
	1	3961997		1976-06-08	Chu	
	2	4427839		1984-01-24	Hall	
	3	4665277		1987-05-12	Sah, et al.	
	4	4927770		1990-05-22	Swanson	
	5	5030295		1991-07-09	Swanson, et al.	
	6	5053083		1991-10-01	Sinton	
	7	5057439		1991-10-15	Swanson	
	8	5164019		1992-11-17	Sinton	

ALL REFERENCES CONSIDERED EXCEPT WHERE LINED THROUGH. /D.P./

Receipt date: 09/07/2012	Application Number	13495577	13495577 - GAU: 1755
INFORMATION DISCLOSURE STATEMENT BY APPLICANT (**Not for submission under 37 CFR 1.99)**	Filing Date	2012-06-13	
	First Named Inventor	Peter John Cousins	
	Art Unit		
	Examiner Name		
	Attorney Docket Number	10031.004210	

	9	5217539		1993-06-08	Fraas, et al.	
	10	5266125		1993-11-30	Rand, et al.	
	11	5360990		1994-11-01	Swanson	
	12	5369291		1994-11-29	Swanson	
	13	5449626		1995-09-12	Hezel	
	14	5479018		1995-12-26	McKee, et al.	
	15	5620904		1997-04-15	Hanoka	
	16	5641362		1997-06-24	Meier	
	17	5693578		1997-12-02	Nakanishi, et al.	
	18	6262359		2001-07-17	Meier, et al.	
	19	6274402		2001-08-14	Verlinden, et al.	

ALL REFERENCES CONSIDERED EXCEPT WHERE LINED THROUGH. /D.P./

Receipt date: 09/07/2012	Application Number	13495577	13495577 - GAU: 1755
INFORMATION DISCLOSURE STATEMENT BY APPLICANT (**Not for submission under 37 CFR 1.99)**	Filing Date	2012-06-13	
	First Named Inventor	Peter John Cousins	
	Art Unit		
	Examiner Name		
	Attorney Docket Number	10031.004210	

	20	6313395		2001-11-06	Crane, et al.	
	21	6333457		2001-12-25	Mulligan, et al.	
	22	6337283		2002-01-08	Verlinden, et al.	
	23	6387726		2002-05-14	Verlinden, et al.	
	24	6423568		2002-07-23	Verlinden, et al.	
	25	6524880		2003-02-25	Moon, et al.	
	26	6638788		2003-10-28	Emoto, et al.	
	27	6998288		2006-02-14	Smith, et al.	
	28	7135350		2006-11-14	Smith, et al.	
	29	7468485		2008-12-23	Swanson	
	30	8207444		2012-06-26	Cousins	

ALL REFERENCES CONSIDERED EXCEPT WHERE LINED THROUGH. /D.P./

Receipt date: 09/07/2012	Application Number	13495577	13495577 - GAU: 1755
INFORMATION DISCLOSURE STATEMENT BY APPLICANT (**Not for submission under 37 CFR 1.99)**	Filing Date	2012-06-13	
	First Named Inventor	Peter John Cousins	
	Art Unit		
	Examiner Name		
	Attorney Docket Number	10031.004210	

	31	8222516		2012-07-17	Cousins	

If you wish to add additional U.S. Patent citation information please click the Add button. Add

U.S.PATENT APPLICATION PUBLICATIONS Remove

Examiner Initial*	Cite No	Publication Number	Kind Code[1]	Publication Date	Name of Patentee or Applicant of cited Document	Pages,Columns,Lines where Relevant Passages or Relevant Figures Appear
	1	20030134469		2003-07-17	Horzel, et al.	
	2	20040200520		2004-10-14	Mulligan, et al.	
	3	20050016585		2005-01-27	Munzer	
	4	20050268963		2005-12-08	Jordan, et al.	
	5	20060130891		2006-06-22	Carlson, et al.	
	6	20060157103		2006-07-20	Sheats, et al.	
	7	20060096635		2006-05-11	Tuttle	
	8	20060185716		2006-08-24	Murozomo, et al.	

ALL REFERENCES CONSIDERED EXCEPT WHERE LINED THROUGH. /D.P./

Receipt date: 09/07/2012	Application Number	13495577	13495577 - GAU: 1755
INFORMATION DISCLOSURE STATEMENT BY APPLICANT (**Not for submission under 37 CFR 1.99)**	Filing Date	2012-06-13	
	First Named Inventor	Peter John Cousins	
	Art Unit		
	Examiner Name		
	Attorney Docket Number	10031.004210	

	9	20070082206		2007-04-12	Hartig	
	10	20070023081		2007-02-01	Johnson, et al.	
	11	20080078444		2008-04-03	Atanackovic	
	12	20080173347		2008-07-24	Korevaar, et al.	
	13	20090159111		2009-06-25	Jawarani, et al.	
	14	20110114171		2011-05-19	Meier, et al.	

If you wish to add additional U.S. Published Application citation information please click the Add button. Add

FOREIGN PATENT DOCUMENTS Remove

Examiner Initial*	Cite No	Foreign Document Number[3]	Country Code[2] ¡	Kind Code[4]	Publication Date	Name of Patentee or Applicant of cited Document	Pages,Columns,Lines where Relevant Passages or Relevant Figures Appear	T[5]
	1	WO 2008/004791	WO		2008-01-10	LG ELECTRONICS INC.		☐

If you wish to add additional Foreign Patent Document citation information please click the Add button Add

NON-PATENT LITERATURE DOCUMENTS Remove

Examiner Initials*	Cite No	Include name of the author (in CAPITAL LETTERS), title of the article (when appropriate), title of the item (book, magazine, journal, serial, symposium, catalog, etc), date, pages(s), volume-issue number(s), publisher, city and/or country where published.	T[5]

ALL REFERENCES CONSIDERED EXCEPT WHERE LINED THROUGH. /D.P./

Receipt date: 09/07/2012	Application Number	13495577 13495577 - GAU: 1755
INFORMATION DISCLOSURE STATEMENT BY APPLICANT (**Not for submission under 37 CFR 1.99)**	Filing Date	2012-06-13
	First Named Inventor	Peter John Cousins
	Art Unit	
	Examiner Name	
	Attorney Docket Number	10031.004210

	1		☐

If you wish to add additional non-patent literature document citation information please click the Add button **Add**

EXAMINER SIGNATURE

Examiner Signature	/Devina Pillay/	Date Considered	02/11/2014

*EXAMINER: Initial if reference considered, whether or not citation is in conformance with MPEP 609. Draw line through a citation if not in conformance and not considered. Include copy of this form with next communication to applicant.

[1] See Kind Codes of USPTO Patent Documents at www.USPTO.GOV or MPEP 901.04. [2] Enter office that issued the document, by the two-letter code (WIPO Standard ST.3). [3] For Japanese patent documents, the indication of the year of the reign of the Emperor must precede the serial number of the patent document. [4] Kind of document by the appropriate symbols as indicated on the document under WIPO Standard ST.16 if possible. [5] Applicant is to place a check mark here if English language translation is attached.

ALL REFERENCES CONSIDERED EXCEPT WHERE LINED THROUGH. /D.P./

Index of Claims	Application/Control No.	Applicant(s)/Patent Under Reexamination
	13495577	COUSINS, PETER JOHN
	Examiner	**Art Unit**
	DEVINA PILLAY	1755

✓	Rejected	-	Cancelled	N	Non-Elected	A	Appeal
=	Allowed	÷	Restricted	I	Interference	O	Objected

☐ Claims renumbered in the same order as presented by applicant ☐ CPA ☐ T.D. ☐ R.1.47

CLAIM		DATE								
Final	Original	02/04/2014								
	1	-								
	2	-								
	3	-								
	4	-								
	5	-								
	6	-								
	7	-								
	8	-								
	9	✓								
	10	✓								
	11	✓								
	12	✓								
	13	✓								
	14	✓								
	15	✓								
	16	✓								
	17	-								
	18	-								
	19	-								
	20	-								
	21	✓								
	22	✓								
	23	✓								
	24	✓								
	25	✓								
	26	✓								
	27	✓								
	28	✓								
	29	✓								
	30	✓								
	31	✓								
	32	✓								

UNITED STATES PATENT AND TRADEMARK OFFICE

UNITED STATES DEPARTMENT OF COMMERCE
United States Patent and Trademark Office
Address: COMMISSIONER FOR PATENTS
P.O. Box 1450
Alexandria, Virginia 22313-1450
www.uspto.gov

BIB DATA SHEET

CONFIRMATION NO. 3380

SERIAL NUMBER	FILING or 371(c) DATE	CLASS	GROUP ART UNIT	ATTORNEY DOCKET NO.
13/495,577	06/13/2012 RULE	136	1755	10031.004210

APPLICANTS
Peter John COUSINS, Menlo Park, CA;

**** CONTINUING DATA ***************************
This application is a DIV of 12/070,742 02/20/2008 PAT 8222516

**** FOREIGN APPLICATIONS ***************************

**** IF REQUIRED, FOREIGN FILING LICENSE GRANTED ****
07/11/2012

Foreign Priority claimed	☐ Yes ☑ No		STATE OR COUNTRY	SHEETS DRAWINGS	TOTAL CLAIMS	INDEPENDENT CLAIMS
35 USC 119(a-d) conditions met	☐ Yes ☑ No	☐ Met after Allowance				
Verified and Acknowledged	Examiner's Signature	Initials	CA	7	20	3

ADDRESS
Okamoto & Benedicto LLP
P.O. Box 641330
San Jose, CA 95164-1330
UNITED STATES

TITLE
FRONT CONTACT SOLAR CELL WITH FORMED EMITTER

FILING FEE RECEIVED		
1250	FEES: Authority has been given in Paper No._____ to charge/credit DEPOSIT ACCOUNT No._____ for following:	☐ All Fees ☐ 1.16 Fees (Filing) ☐ 1.17 Fees (Processing Ext. of time) ☐ 1.18 Fees (Issue) ☐ Other _____ ☐ Credit

EAST Search History

EAST Search History (Prior Art)

Ref #	Hits	Search Query	DBs	Default Operator	Plurals	Time Stamp
L1	44	"7468485"	US-PGPUB; USPAT; USOCR; FPRS; EPO; JPO; DERWENT; IBM_TDB	OR	ON	2014/02/11 15:41
L2	22	"7633006"	US-PGPUB; USPAT; USOCR; FPRS; EPO; JPO; DERWENT; IBM_TDB	OR	ON	2014/02/11 15:41
L3	18	"8207444"	US-PGPUB; USPAT; USOCR; FPRS; EPO; JPO; DERWENT; IBM_TDB	OR	ON	2014/02/11 15:42
S1	2	"20030134469"	US-PGPUB; USPAT; USOCR; FPRS; EPO; JPO; DERWENT; IBM_TDB	OR	ON	2009/12/07 11:43
S2	4	("2003/0134469").URPN.	USPAT	OR	ON	2009/12/07 11:56
S3	0	"10353261"	USPAT	OR	ON	2009/12/07 11:57
S4	1	"10/353261"	USPAT	OR	ON	2009/12/07 11:57
S5	19	("2999240" | "4001864" | "4104091" | "4133698" | "4142200" | "4152824" | "4156822" | "4201798" | "4377901" | "4478879" | "5013396" | "5543333" | "6096968" | "6136673" | "6146483" | "6206996" | "6278053").PN. OR ("6825104").URPN.	US-PGPUB; USPAT; USOCR	OR	ON	2009/12/07 11:58
S6	39	(back near surface near field) and texture and dielectric	US-PGPUB; USPAT; USOCR	OR	ON	2009/12/07 11:58
S7	18	(back near surface near field) and texture and dielectric and anti near reflective	US-PGPUB; USPAT; USOCR	OR	ON	2009/12/07 12:06
S8	18	(back near surface near field) and texture and dielectric and anti near	US-PGPUB; USPAT;	OR	ON	2009/12/07 12:06

		reflective	USOCR; FPRS; EPO; JPO; DERWENT; IBM_TDB			
S9	10	(back near surface near field) and texture and antireflective and emitter	US-PGPUB; USPAT; USOCR	OR	ON	2009/12/07 12:09
S10	65	texture and antireflective and emitter	US-PGPUB; USPAT; USOCR	OR	ON	2009/12/07 12:09
S11	66	texture and antireflective and emitter	US-PGPUB; USPAT; USOCR; FPRS; EPO; JPO; DERWENT; IBM_TDB	OR	ON	2009/12/07 12:10
S12	120	textur$4 and antireflective and emitter	US-PGPUB; USPAT; USOCR; FPRS; EPO; JPO; DERWENT; IBM_TDB	OR	ON	2009/12/07 12:11
S13	54	S12 not S11	US-PGPUB; USPAT; USOCR; FPRS; EPO; JPO; DERWENT; IBM_TDB	OR	ON	2009/12/07 12:11
S14	18	S13 and dielectric	US-PGPUB; USPAT; USOCR; FPRS; EPO; JPO; DERWENT; IBM_TDB	OR	ON	2009/12/07 12:12
S15	3	"20070082206"	US-PGPUB; USPAT; USOCR; FPRS; EPO; JPO; DERWENT; IBM_TDB	OR	ON	2009/12/07 12:17
S16	443	dielectric and antireflective and emitter	US-PGPUB; USPAT; USOCR; FPRS; EPO; JPO; DERWENT; IBM_TDB	OR	ON	2009/12/07 12:17
S17	132	dielectric and antireflective and emitter and ((solar near cell) (photovoltaic))	US-PGPUB; USPAT; USOCR; FPRS; EPO; JPO; DERWENT; IBM_TDB	OR	ON	2009/12/07 12:18

S18	192	(back near surface near field) and dielectric	US-PGPUB; USPAT; USOCR	OR	ON	2009/12/07 12:18
S19	1	"20030134469"	US-PGPUB; USPAT; USOCR	OR	ON	2009/12/07 12:28
S20	19	("3413157" | "4012235" | "4239810" | "4313768" | "4604791" | "4624045" | "4633031" | "4781766" | "4836861" | "4910153" | "5879977" | "6111191").PN. OR ("6210991").URPN.	US-PGPUB; USPAT; USOCR	OR	ON	2009/12/07 12:51
S21	2	"20060196535"	US-PGPUB; USPAT; USOCR	OR	ON	2009/12/07 12:55
S22	14	("20030070707" | "4070097" | "4084099" | "4278831" | "4496788" | "5057439" | "5066340" | "5213628" | "5468652" | "5728230" | "6013582" | "6118258" | "6210991" | "6465724").PN. OR ("7554031").URPN.	US-PGPUB; USPAT; USOCR	OR	ON	2009/12/07 13:13
S23	346	dielectric and (antireflection or anti near reflection or ARC) and emitter and textur$5	US-PGPUB; USPAT; USOCR	OR	ON	2009/12/07 13:17
S24	347	dielectric and (antireflection or anti near reflection or ARC) and emitter and textur$5	US-PGPUB; USPAT; USOCR; FPRS; EPO; JPO; DERWENT; IBM_TDB	OR	ON	2009/12/07 13:17
S25	124	S23 and ((solar near cell) (photovoltaic))	US-PGPUB; USPAT; USOCR; FPRS; EPO; JPO; DERWENT; IBM_TDB	OR	ON	2009/12/07 13:17
S26	7	11/263159	US-PGPUB; USPAT; USOCR; FPRS; EPO; JPO; DERWENT; IBM_TDB	OR	ON	2009/12/07 13:50
S27	29	S24 and optoelectronic	US-PGPUB; USPAT; USOCR; FPRS; EPO; JPO; DERWENT; IBM_TDB	OR	ON	2009/12/07 14:08
S28	479	dielectric and (antireflection or anti near reflection or ARC) and (emitter or collector) and textur$5	US-PGPUB; USPAT; USOCR	OR	ON	2009/12/07 14:09
S29	133	S28 not S24	US-PGPUB; USPAT; USOCR	OR	ON	2009/12/07 14:09
S30	32	S29 and ((solar near cell) (photovoltaic))	US-PGPUB; USPAT; USOCR;	OR	ON	2009/12/07 14:09

			FPRS; EPO; JPO; DERWENT; IBM_TDB			
S31	19	("4090213" | "4131486" | "4133698" | "4232245" | "4255211" | "4315097" | "4316049" | "4341918" | "4365262" | "4367368" | "4385198" | "4427839").PN. OR ("4665277").URPN.	US-PGPUB; USPAT; USOCR	OR	ON	2009/12/07 14:32
S32	14	("3150999" | "4227942" | "4348254").PN. OR ("4427839").URPN.	US-PGPUB; USPAT; USOCR	OR	ON	2009/12/07 14:35
S33	1092	(antireflection or anti near reflection or ARC) and emitter and textur$5	US-PGPUB; USPAT; USOCR; FPRS; EPO; JPO; DERWENT; IBM_TDB	OR	ON	2009/12/07 14:47
S34	233	S33 and (solar near cell)	US-PGPUB; USPAT; USOCR; FPRS; EPO; JPO; DERWENT; IBM_TDB	OR	ON	2009/12/07 14:47
S35	215	S34 not (S17)	US-PGPUB; USPAT; USOCR; FPRS; EPO; JPO; DERWENT; IBM_TDB	OR	ON	2009/12/07 14:47
S36	215	S35 not S29	US-PGPUB; USPAT; USOCR; FPRS; EPO; JPO; DERWENT; IBM_TDB	OR	ON	2009/12/07 14:48
S37	0	2004/0112426	US-PGPUB; USPAT; USOCR; FPRS; EPO; JPO; DERWENT; IBM_TDB	OR	ON	2009/12/07 15:08
S38	2	"20040112426"	US-PGPUB; USPAT; USOCR; FPRS; EPO; JPO; DERWENT; IBM_TDB	OR	ON	2009/12/07 15:08
S39	10	("20040200520" | "4234352" | "4478879" | "4920639" | "4927770" | "5053083" | "5320684" | "5538564" | "5641362" | "6624737").PN. OR ("7339110").URPN.	US-PGPUB; USPAT; USOCR	OR	ON	2009/12/07 15:14
S40	88	(back near surface near field) and	US-PGPUB;	OR	ON	2009/12/07

		antireflective and emitter	USPAT; USOCR; FPRS; EPO; JPO; DERWENT; IBM_TDB			15:23
S41	175	(back near surface near field) and (antireflective ARC (anti near reflective)) and emitter	US-PGPUB; USPAT; USOCR; FPRS; EPO; JPO; DERWENT; IBM_TDB	OR	ON	2009/12/07 15:24
S42	87	S41 not S40	US-PGPUB; USPAT; USOCR; FPRS; EPO; JPO; DERWENT; IBM_TDB	OR	ON	2009/12/07 15:24
S43	138	S41 not S36	US-PGPUB; USPAT; USOCR; FPRS; EPO; JPO; DERWENT; IBM_TDB	OR	ON	2009/12/07 15:24
S44	26	("2841860" | "2854363" | "3134906" | "4070689" | "4341589" | "4428783" | "4523966" | "4665277" | "4703553" | "5156978").PN. OR ("5928438").URPN.	US-PGPUB; USPAT; USOCR	OR	ON	2009/12/07 15:30
S45	19	("4090213" | "4131486" | "4133698" | "4232245" | "4255211" | "4315097" | "4316049" | "4341918" | "4365262" | "4367368" | "4385198" | "4427839").PN. OR ("4665277").URPN.	US-PGPUB; USPAT; USOCR	OR	ON	2009/12/07 16:00
S46	11	("3081370" | "3757123" | "3948682" | "3969746").PN. OR ("4131486").URPN.	US-PGPUB; USPAT; USOCR	OR	ON	2009/12/07 16:02
S47	15	"5258077"	US-PGPUB; USPAT; USOCR; FPRS; EPO; JPO; DERWENT; IBM_TDB	OR	ON	2009/12/07 17:11
S48	14	("3895975" | "4056879" | "4106047" | "4131486" | "4226017" | "4916503" | "5538564" | "5641362" | "5951742" | "5973260" | "6071753").PN. OR ("6262359").URPN.	US-PGPUB; USPAT; USOCR	OR	ON	2009/12/07 17:13
S49	7	(back near junction) and (passiv$4 with "SiO.sub.2")	US-PGPUB; USPAT; USOCR; FPRS; EPO; JPO; DERWENT; IBM_TDB	OR	ON	2009/12/07 18:25
S50	10	(back with surface with field) and (passiv$4 with "SiO.sub.2")	US-PGPUB; USPAT;	OR	ON	2009/12/07 18:27

			USOCR; FPRS; EPO; JPO; DERWENT; IBM_TDB			
S51	15	(passiv$4 with "SiO.sub.2" with emitter)	US-PGPUB; USPAT; USOCR; FPRS; EPO; JPO; DERWENT; IBM_TDB	OR	ON	2009/12/07 18:28
S52	1984	(passiv$4 with ("SiO.sub.2" or (silicon near dioxide)))	US-PGPUB; USPAT; USOCR; FPRS; EPO; JPO; DERWENT; IBM_TDB	OR	ON	2009/12/07 18:31
S53	67	(passiv$4 with ("SiO.sub.2" or (silicon near dioxide))) and solar near cell	US-PGPUB; USPAT; USOCR; FPRS; EPO; JPO; DERWENT; IBM_TDB	OR	ON	2009/12/07 18:31
S54	3	"20070082206"	US-PGPUB; USPAT; USOCR; FPRS; EPO; JPO; DERWENT; IBM_TDB	OR	ON	2009/12/07 18:37
S55	14	("3895975" | "4056879" | "4106047" | "4131486" | "4226017" | "4916503" | "5538564" | "5641362" | "5951742" | "5973260" | "6071753").PN. OR ("6262359").URPN.	US-PGPUB; USPAT; USOCR	OR	ON	2009/12/07 19:00
S56	163	(back near junction) and (solar near cell)	US-PGPUB; USPAT; USOCR; FPRS; EPO; JPO; DERWENT; IBM_TDB	OR	ON	2009/12/07 19:13
S57	141	(back near junction) and (photovoltaic)	US-PGPUB; USPAT; USOCR; FPRS; EPO; JPO; DERWENT; IBM_TDB	OR	ON	2009/12/07 19:29
S58	39	S57 not S56	US-PGPUB; USPAT; USOCR; FPRS; EPO; JPO; DERWENT; IBM_TDB	OR	ON	2009/12/07 19:29
S59	345	(back near2 junction) and (solar near cell or (photovoltaic))	US-PGPUB; USPAT;	OR	ON	2009/12/07 19:31

			USOCR; FPRS; EPO; JPO; DERWENT; IBM_TDB			
S60	182	S59 not S56	US-PGPUB; USPAT; USOCR; FPRS; EPO; JPO; DERWENT; IBM_TDB	OR	ON	2009/12/07 19:31
S61	32	S60 and emitter	US-PGPUB; USPAT; USOCR; FPRS; EPO; JPO; DERWENT; IBM_TDB	OR	ON	2009/12/07 19:31
S62	16	(US-20050268963-$ or US-20020153039-$ or US-20060196535-$ or US-20090101199-$ or US-20040097062-$ or US-20040112426-$ or US-20070186970-$).did. or (US-4379944-$ or US-4665277-$ or US-5320684-$ or US-6210991-$ or US-5792280-$ or US-5899704-$ or US-6262359-$ or US-5258077-$).did. or (US-20090205712-$).did.	US-PGPUB; USPAT; DERWENT	OR	ON	2009/12/07 19:33
S63	0	S62 and (isolation near2 trench)	US-PGPUB; USPAT; USOCR; FPRS; EPO; JPO; DERWENT; IBM_TDB	OR	ON	2009/12/07 19:34
S64	346	dielectric and (antireflection or anti near reflection or ARC) and emitter and textur$5	US-PGPUB; USPAT; USOCR	OR	ON	2009/12/07 19:34
S65	16	S64 and (isolation near trench)	US-PGPUB; USPAT; USOCR	OR	ON	2009/12/07 19:34
S66	251	solar near cell and (isolation near trench)	US-PGPUB; USPAT; USOCR	OR	ON	2009/12/07 19:35
S67	232	(back with surface with field) and (isolation near trench)	US-PGPUB; USPAT; USOCR; FPRS; EPO; JPO; DERWENT; IBM_TDB	OR	ON	2009/12/07 19:36
S68	2	S67 and solar near cell	US-PGPUB; USPAT; USOCR; FPRS; EPO; JPO; DERWENT; IBM_TDB	OR	ON	2009/12/07 19:36
S69	24	(back with surface with field) and	US-PGPUB;	OR	ON	2009/12/07

		(isolation near2 edge) and (solar near cell)	USPAT; USOCR; FPRS; EPO; JPO; DERWENT; IBM_TDB			19:40
S70	49	("20030134469" | "20040200520" | "20040200520" | "20060130891" | "20070082206" | "3961997" | "3961997" | "4927770" | "4927770" | "5030295" | "5053083" | "5057439" | "5164019" | "5217539" | "5360990" | "5369291" | "5641362" | "5030295" | "5053083" | "5057439" | "5164019" | "5217539" | "5266125" | "5360990" | "5369291" | "5641362" | "6274402" | "6313395" | "6333457" | "6387726" | "6423568" | "6998288" | "6998288" | "6274402" | "6313395" | "6333457" | "6337283" | "6387726" | "6423568" | "6524880" | "6998288" | "7135350" | "7135350").PN.	US-PGPUB; USPAT; USOCR; FPRS; EPO; JPO; DERWENT; IBM_TDB	OR	ON	2009/12/07 19:54
S71	288	oxide with passiv$5 with emitter	US-PGPUB; USPAT; USOCR; FPRS; EPO; JPO; DERWENT; IBM_TDB	OR	ON	2009/12/07 20:00
S72	32	S71 and ((solar near cell) photovoltaic)	US-PGPUB; USPAT; USOCR; FPRS; EPO; JPO; DERWENT; IBM_TDB	OR	ON	2009/12/07 20:00
S73	29	"4726850"	US-PGPUB; USPAT; USOCR; FPRS; EPO; JPO; DERWENT; IBM_TDB	OR	ON	2009/12/07 20:29
S74	0	(back with surface with field) and (isolat$3 near5 edge with trench) and (solar near cell)	US-PGPUB; USPAT; USOCR; FPRS; EPO; JPO; DERWENT; IBM_TDB	OR	ON	2009/12/07 20:34
S75	32	(back with surface with field) and (isolat$3 near5 edge) and (solar near cell)	US-PGPUB; USPAT; USOCR; FPRS; EPO; JPO; DERWENT; IBM_TDB	OR	ON	2009/12/07 20:34
S76	39	(back with surface with field) and (isolation near5 trench with etch)	US-PGPUB; USPAT; USOCR; FPRS; EPO; JPO;	OR	ON	2009/12/07 20:40

			DERWENT; IBM_TDB			
S77	20	(solar near cell) and (isolation near5 trench with etch)	US-PGPUB; USPAT; USOCR; FPRS; EPO; JPO; DERWENT; IBM_TDB	OR	ON	2009/12/07 20:41
S78	304	(solar near cell) and (isolation near5 trench)	US-PGPUB; USPAT; USOCR; FPRS; EPO; JPO; DERWENT; IBM_TDB	OR	ON	2009/12/07 20:42
S79	7	(solar near cell) and (isolation near5 trench with edge)	US-PGPUB; USPAT; USOCR; FPRS; EPO; JPO; DERWENT; IBM_TDB	OR	ON	2009/12/07 20:42
S80	24	(trench with (electric$4 near isolat$4)) and emitter and (solar near cell)	US-PGPUB; USPAT; USOCR; FPRS; EPO; JPO; DERWENT; IBM_TDB	OR	ON	2009/12/07 20:52
S81	41	(silver near5 ("SiO.sub.2" or silicon near dioxide)) and (solar near cell) and emitter	US-PGPUB; USPAT; USOCR; FPRS; EPO; JPO; DERWENT; IBM_TDB	OR	ON	2009/12/07 21:06
S82	42	(silver near5 ("SiO.sub.2" or silicon near dioxide or passiv$4)) and (solar near cell) and emitter	US-PGPUB; USPAT; USOCR; FPRS; EPO; JPO; DERWENT; IBM_TDB	OR	ON	2009/12/07 21:07
S83	50	((silver or Ag) near5 ("SiO.sub.2" or silicon near dioxide or passiv$4)) and (solar near cell) and emitter	US-PGPUB; USPAT; USOCR; FPRS; EPO; JPO; DERWENT; IBM_TDB	OR	ON	2009/12/07 21:07
S84	44	((silver) near5 ("SiO.sub.2" or silicon near dioxide or passiv$4)) and ((solar near cell) or photovoltaic) and emitter	US-PGPUB; USPAT; USOCR; FPRS; EPO; JPO; DERWENT; IBM_TDB	OR	ON	2009/12/07 21:08
S85	90	((silver) near5 ("SiO.sub.2" or silicon near dioxide or passiv$4)) and ((solar near cell) or photovoltaic)	US-PGPUB; USPAT; USOCR;	OR	ON	2009/12/07 21:09

			FPRS; EPO; JPO; DERWENT; IBM_TDB			
S86	46	S85 not S84	US-PGPUB; USPAT; USOCR; FPRS; EPO; JPO; DERWENT; IBM_TDB	OR	ON	2009/12/07 21:09
S87	105	((silver) near5 ("SiO.sub.2" or silicon near dioxide or passiv$4)) and ((solar near cell) or photovoltaic or optoelectronic)	US-PGPUB; USPAT; USOCR; FPRS; EPO; JPO; DERWENT; IBM_TDB	OR	ON	2009/12/07 21:12
S88	15	S87 not S85	US-PGPUB; USPAT; USOCR; FPRS; EPO; JPO; DERWENT; IBM_TDB	OR	ON	2009/12/07 21:12
S89	345	((silver) with ("SiO.sub.2" or silicon near dioxide or passiv$4)) and ((solar near cell) or photovoltaic or optoelectronic)	US-PGPUB; USPAT; USOCR; FPRS; EPO; JPO; DERWENT; IBM_TDB	OR	ON	2009/12/07 21:13
S90	240	S89 not S87	US-PGPUB; USPAT; USOCR; FPRS; EPO; JPO; DERWENT; IBM_TDB	OR	ON	2009/12/07 21:13
S91	14	("3150999" | "4227942" | "4348254").PN. OR ("4427839").URPN.	US-PGPUB; USPAT; USOCR	OR	ON	2009/12/07 21:17
S92	1122	silver with infrared with reflect$4	US-PGPUB; USPAT; USOCR	OR	ON	2009/12/07 21:38
S93	584	silver near5 infrared with reflect$4	US-PGPUB; USPAT; USOCR	OR	ON	2009/12/07 21:38
S94	565	silver near5 infrared near5 reflect$4	US-PGPUB; USPAT; USOCR	OR	ON	2009/12/07 21:38
S95	25	S94 and solar near cell	US-PGPUB; USPAT; USOCR	OR	ON	2009/12/07 21:38
S96	29	S94 and photovoltaic	US-PGPUB; USPAT; USOCR	OR	ON	2009/12/07 21:41
S97	18	"5479018"	US-PGPUB; USPAT; USOCR	OR	ON	2009/12/07 21:56

S98	1822	dichroic near coating	US-PGPUB; USPAT; USOCR; FPRS; EPO; JPO; DERWENT; IBM_TDB	OR	ON	2009/12/08 10:20
S99	54	dichroic near coating and (powder)	US-PGPUB; USPAT; USOCR; FPRS; EPO; JPO; DERWENT; IBM_TDB	OR	ON	2009/12/08 10:21
S100	296	(fluorescent near powder) and (light near5 film)	US-PGPUB; USPAT; USOCR; FPRS; EPO; JPO; DERWENT; IBM_TDB	OR	ON	2009/12/08 10:22
S101	1	6262359B1	US-PGPUB; USPAT; USOCR; FPRS; EPO; JPO; DERWENT; IBM_TDB	OR	ON	2009/12/10 10:08
S102	1	2000-587576.NRAN.	DERWENT	OR	ON	2009/12/10 10:08
S103	5	"6262359"	US-PGPUB; USPAT; USOCR; FPRS; EPO; JPO; DERWENT; IBM_TDB	OR	ON	2009/12/10 10:08
S104	14	("3895975" | "4056879" | "4106047" | "4131486" | "4226017" | "4916503" | "5538564" | "5641362" | "5951742" | "5973260" | "6071753").PN. OR ("6262359").URPN.	US-PGPUB; USPAT; USOCR	OR	ON	2009/12/10 10:09
S105	11	("3081370" | "3757123" | "3948682" | "3969746").PN. OR ("4131486").URPN.	US-PGPUB; USPAT; USOCR	OR	ON	2009/12/10 10:09
S106	12	("4090213" | "4131486" | "4133698" | "4232245" | "4255211" | "4315097" | "4316049" | "4341918" | "4365262" | "4367368" | "4385198" | "4427839").PN.	US-PGPUB; USPAT; USOCR	OR	ON	2009/12/10 10:11
S107	14	("3150999" | "4227942" | "4348254").PN. OR ("4427839").URPN.	US-PGPUB; USPAT; USOCR	OR	ON	2009/12/10 10:11
S108	19	("4090213" | "4131486" | "4133698" | "4232245" | "4255211" | "4315097" | "4316049" | "4341918" | "4365262" | "4367368" | "4385198" | "4427839").PN. OR ("4665277").URPN.	US-PGPUB; USPAT; USOCR	OR	ON	2009/12/10 10:11
S109	9	floating same emitter same solar same cell	US-PGPUB; USPAT;	OR	ON	2009/12/10 10:33

			USOCR			
S110	19	("4090213" | "4131486" | "4133698" | "4232245" | "4255211" | "4315097" | "4316049" | "4341918" | "4365262" | "4367368" | "4385198" | "4427839").PN. OR ("4665277").URPN.	US-PGPUB; USPAT; USOCR	OR	ON	2009/12/10 10:35
S111	7	"6262359"	US-PGPUB; USPAT; USOCR; FPRS; EPO; JPO; DERWENT; IBM_TDB	OR	ON	2010/05/20 10:23
S112	16	("3895975" | "4056879" | "4106047" | "4131486" | "4226017" | "4916503" | "5538564" | "5641362" | "5951742" | "5973260" | "6071753").PN. OR ("6262359").URPN.	US-PGPUB; USPAT; USOCR	OR	ON	2010/05/20 10:23
S113	4	S112 and polycrystal$4	US-PGPUB; USPAT; USOCR	OR	ON	2010/05/20 10:23
S114	9	("4377901" | "4478879" | "5082791" | "5665175").PN. OR ("6071753").URPN.	US-PGPUB; USPAT; USOCR	OR	ON	2010/05/20 10:26
S115	10	("20020011590" | "5103851" | "5437734" | "5738732" | "6071753" | "6130380" | "6166320" | "6548751").PN. OR ("6927417").URPN.	US-PGPUB; USPAT; USOCR	OR	ON	2010/05/20 10:28
S116	6	("4837607" | "5543333" | "5738732").PN. OR ("6130380").URPN.	US-PGPUB; USPAT; USOCR	OR	ON	2010/05/20 10:29
S117	414	polycrystalline near5 substrate same emitter	US-PGPUB; USPAT; USOCR	OR	ON	2010/05/20 10:43
S118	45	S117 and ((solar photovoltaic) near (battery device cell))	US-PGPUB; USPAT; USOCR	OR	ON	2010/05/20 10:43
S119	10	"4665277"	US-PGPUB; USPAT; USOCR; FPRS; EPO; JPO; DERWENT; IBM_TDB	OR	ON	2010/05/20 11:39
S120	1	"12070742"	US-PGPUB; USPAT; USOCR; FPRS; EPO; JPO; DERWENT; IBM_TDB	OR	ON	2010/05/20 11:44
S121	1	"12070742"	US-PGPUB; USPAT; USOCR; FPRS; EPO; JPO; DERWENT; IBM_TDB	OR	ON	2012/03/15 16:12
S122	41	polysilicon near2 emitter and	US-PGPUB;	OR	OFF	2012/03/15

		(photovoltaic solar near2 (Cell device battery))	USPAT; USOCR; FPRS; EPO; JPO; DERWENT; IBM_TDB			16:28
S123	18	"4989059"	US-PGPUB; USPAT; USOCR; FPRS; EPO; JPO; DERWENT; IBM_TDB	OR	OFF	2012/03/15 16:34
S124	50	(polysilicon polycrystalline) near2 emitter and (photovoltaic solar near2 (Cell device battery))	US-PGPUB; USPAT; USOCR; FPRS; EPO; JPO; DERWENT; IBM_TDB	OR	OFF	2012/03/15 16:35
S125	9	S124 not S122	US-PGPUB; USPAT; USOCR; FPRS; EPO; JPO; DERWENT; IBM_TDB	OR	OFF	2012/03/15 16:35
S126	343	(polysilicon polycrystalline) same emitter and (photovoltaic solar near2 (Cell device battery))	US-PGPUB; USPAT; USOCR; FPRS; EPO; JPO; DERWENT; IBM_TDB	OR	OFF	2012/03/15 16:37
S127	297	(polysilicon polycrystalline) same emitter and (photovoltaic solar near2 (Cell device battery)) and (dielectric oxide)	US-PGPUB; USPAT; USOCR; FPRS; EPO; JPO; DERWENT; IBM_TDB	OR	OFF	2012/03/15 16:37
S128	347591	(polysilicon polycrystalline) wiith emitter and (photovoltaic solar near2 (Cell device battery)) and (dielectric oxide)	US-PGPUB; USPAT; USOCR; FPRS; EPO; JPO; DERWENT; IBM_TDB	OR	OFF	2012/03/15 16:37
S129	128	(polysilicon polycrystalline) with emitter and (photovoltaic solar near2 (Cell device battery)) and (dielectric oxide)	US-PGPUB; USPAT; USOCR; FPRS; EPO; JPO; DERWENT; IBM_TDB	OR	OFF	2012/03/15 16:37
S130	86	S129 not S124	US-PGPUB; USPAT; USOCR; FPRS; EPO; JPO; DERWENT;	OR	OFF	2012/03/15 16:38

			IBM_TDB			
S131	2	"20090159111"	US-PGPUB; USPAT; USOCR; FPRS; EPO; JPO; DERWENT; IBM_TDB	OR	OFF	2012/03/15 16:43
S132	6	"2008004791"	US-PGPUB; USPAT; USOCR; FPRS; EPO; JPO; DERWENT; IBM_TDB	OR	OFF	2012/03/15 16:46
S133	10	"7468485"	US-PGPUB; USPAT; USOCR; FPRS; EPO; JPO; DERWENT; IBM_TDB	OR	OFF	2012/03/15 16:47
S134	24	("3961997" | "4927770" | "5030295" | "5053083" | "5057439" | "5164019" | "5360990" | "5369291" | "5641362" | "6274402" | "6313395" | "6333457" | "6337283" | "6387726" | "6423568" | "6998288").PN. OR ("7468485").URPN.	US-PGPUB; USPAT; USOCR	OR	OFF	2012/03/15 16:49
S135	14	"5057439"	US-PGPUB; USPAT; USOCR	OR	OFF	2012/03/15 16:55
S136	1	"20090159111"	US-PGPUB; USPAT; USOCR	OR	OFF	2012/03/15 16:55
S137	23	("4090213" | "4131486" | "4133698" | "4232245" | "4255211" | "4315097" | "4316049" | "4341918" | "4365262" | "4367368" | "4385198" | "4427839").PN. OR ("4665277").URPN.	US-PGPUB; USPAT; USOCR	OR	OFF	2012/03/15 16:58
S138	0	S129 not S126	US-PGPUB; USPAT; USOCR; FPRS; EPO; JPO; DERWENT; IBM_TDB	OR	OFF	2012/03/15 17:03
S139	215	S126 not S129	US-PGPUB; USPAT; USOCR; FPRS; EPO; JPO; DERWENT; IBM_TDB	OR	OFF	2012/03/15 17:03
S140	74	emitter and (photovoltaic solar near2 (Cell device battery)) and tunnel near oxide	US-PGPUB; USPAT; USOCR; FPRS; EPO; JPO; DERWENT; IBM_TDB	OR	OFF	2012/03/15 17:04

S141	75	emitter and (photovoltaic solar near2 (Cell device battery)) and tunnel$3 near oxide	US-PGPUB; USPAT; USOCR; FPRS; EPO; JPO; DERWENT; IBM_TDB	OR	OFF	2012/03/15 17:10
S142	1	S141 not S140	US-PGPUB; USPAT; USOCR; FPRS; EPO; JPO; DERWENT; IBM_TDB	OR	OFF	2012/03/15 17:10
S143	222	emitter and (photovoltaic solar near2 (Cell device battery)) and tunnel$3 near5 (oxide barrier)	US-PGPUB; USPAT; USOCR; FPRS; EPO; JPO; DERWENT; IBM_TDB	OR	OFF	2012/03/15 17:11
S144	147	S143 not S141	US-PGPUB; USPAT; USOCR; FPRS; EPO; JPO; DERWENT; IBM_TDB	OR	OFF	2012/03/15 17:12
S145	188	emitter and (photovoltaic solar near2 (Cell device battery)) and tunnel$3 near2 (oxide barrier)	US-PGPUB; USPAT; USOCR; FPRS; EPO; JPO; DERWENT; IBM_TDB	OR	OFF	2012/03/15 17:22
S146	488	(photovoltaic solar near2 (Cell device battery)) and tunnel$3 near2 (oxide barrier)	US-PGPUB; USPAT; USOCR; FPRS; EPO; JPO; DERWENT; IBM_TDB	OR	OFF	2012/03/15 17:27
S147	413	(photovoltaic solar near2 (Cell device battery)) and tunnel$3 near2 (oxide barrier) and silicon	US-PGPUB; USPAT; USOCR; FPRS; EPO; JPO; DERWENT; IBM_TDB	OR	OFF	2012/03/15 17:27
S148	238	S147 not S145	US-PGPUB; USPAT; USOCR; FPRS; EPO; JPO; DERWENT; IBM_TDB	OR	OFF	2012/03/15 17:28
S149	24	("3961997" | "4927770" | "5030295" | "5053083" | "5057439" | "5164019" | "5360990" | "5369291" | "5641362" | "6274402" | "6313395" | "6333457" | "6337283" | "6387726" | "6423568" |	US-PGPUB; USPAT; USOCR	OR	OFF	2012/03/15 17:32

		"6998288").PN. OR ("7468485").URPN.				
S150	0	Sah.in. and emittter	US-PGPUB; USPAT; USOCR	OR	OFF	2012/03/15 17:35
S151	10	Sah.in. and emitter	US-PGPUB; USPAT; USOCR	OR	OFF	2012/03/15 17:35
S152	23	("4090213" | "4131486" | "4133698" | "4232245" | "4255211" | "4315097" | "4316049" | "4341918" | "4365262" | "4367368" | "4385198" | "4427839").PN. OR ("4665277").URPN.	US-PGPUB; USPAT; USOCR	OR	OFF	2012/03/15 17:36
S153	4089	(photovoltaic solar near2 (Cell device battery)) and (passivat$4 near2 oxide dielectric) and silicon and (passivat$4 near2 oxide dielectric) with (reflect$4 metal)	US-PGPUB; USPAT; USOCR; FPRS; EPO; JPO; DERWENT; IBM_TDB	OR	OFF	2012/03/15 17:39
S154	11442	(photovoltaic solar near2 (Cell device battery)) and (passivat$4 near2 oxide dielectric) and silicon	US-PGPUB; USPAT; USOCR; FPRS; EPO; JPO; DERWENT; IBM_TDB	OR	OFF	2012/03/15 17:39
S155	11442	(photovoltaic solar near2 (Cell device battery)) and ((passivat$4 near2 oxide) dielectric) and silicon	US-PGPUB; USPAT; USOCR; FPRS; EPO; JPO; DERWENT; IBM_TDB	OR	OFF	2012/03/15 17:40
S156	11276	(photovoltaic solar near (Cell battery)) and ((passivat$4 near2 oxide) dielectric) and silicon	US-PGPUB; USPAT; USOCR; FPRS; EPO; JPO; DERWENT; IBM_TDB	OR	OFF	2012/03/15 17:40
S157	4063	(photovoltaic solar near (Cell battery)) and ((passivat$4 near2 oxide) dielectric) and silicon and (passivat$4 near2 oxide dielectric) with (reflect$4 metal)	US-PGPUB; USPAT; USOCR; FPRS; EPO; JPO; DERWENT; IBM_TDB	OR	OFF	2012/03/15 17:40
S158	612	(photovoltaic solar near (Cell battery)) and ((passivat$4 near2 oxide) dielectric) and silicon and (passivat$4 near2 oxide dielectric) with (reflect$4 metal) and tunnel$3	US-PGPUB; USPAT; USOCR; FPRS; EPO; JPO; DERWENT; IBM_TDB	OR	OFF	2012/03/15 17:40
S159	612	(photovoltaic solar near (Cell battery)) and ((passivat$4 near2 oxide) dielectric) and silicon and (passivat$4 near2 oxide dielectric) with (reflect$4 metal) and tunnel$3 and silicon	US-PGPUB; USPAT; USOCR; FPRS; EPO; JPO; DERWENT;	OR	OFF	2012/03/15 17:40

			IBM_TDB			
S160	301	(photovoltaic solar near (Cell battery)) and ((passivat$4 near2 oxide) dielectric) and silicon and (passivat$4 near2 oxide dielectric) with (reflect$4 metal) and tunnel$3 and emitter	US-PGPUB; USPAT; USOCR; FPRS; EPO; JPO; DERWENT; IBM_TDB	OR	OFF	2012/03/15 17:41
S161	301	S160 not S148	US-PGPUB; USPAT; USOCR; FPRS; EPO; JPO; DERWENT; IBM_TDB	OR	OFF	2012/03/15 17:41
S162	8	"5956571"	US-PGPUB; USPAT; USOCR; FPRS; EPO; JPO; DERWENT; IBM_TDB	OR	OFF	2012/03/15 17:57
S163	58	"4200472"	US-PGPUB; USPAT; USOCR; FPRS; EPO; JPO; DERWENT; IBM_TDB	OR	OFF	2012/03/15 17:58
S164	2	"20060130891"	US-PGPUB; USPAT; USOCR; FPRS; EPO; JPO; DERWENT; IBM_TDB	OR	OFF	2012/03/15 17:59
S165	50	Borden.in. and emitter	US-PGPUB; USPAT; USOCR; FPRS; EPO; JPO; DERWENT; IBM_TDB	OR	OFF	2012/03/15 18:00
S166	13	"5057439"	USPAT	OR	OFF	2012/03/16 10:33
S167	0	"20090159111"	USPAT	OR	OFF	2012/03/16 10:36
S168	2	"20090159111"	US-PGPUB; USPAT; USOCR; FPRS; EPO; JPO; DERWENT; IBM_TDB	OR	OFF	2012/03/16 10:36
S169	2	"20050268963"	US-PGPUB; USPAT; USOCR; FPRS; EPO; JPO; DERWENT;	OR	OFF	2012/03/16 10:38

			IBM_TDB			
S170	24	("3961997" | "4927770" | "5030295" | "5053083" | "5057439" | "5164019" | "5360990" | "5369291" | "5641362" | "6274402" | "6313395" | "6333457" | "6337283" | "6387726" | "6423568" | "6998288").PN. OR ("7468485").URPN.	US-PGPUB; USPAT; USOCR	OR	OFF	2012/03/16 10:45
S171	14	("4403392" | "4502206").PN. OR ("5057439").URPN.	US-PGPUB; USPAT; USOCR	OR	OFF	2012/03/16 10:47
S172	1	"20060096635"	US-PGPUB; USPAT; USOCR	OR	OFF	2012/03/16 10:49
S173	1	"20090159111"	US-PGPUB; USPAT; USOCR	OR	OFF	2012/03/16 10:49
S174	1	"20050268963"	US-PGPUB; USPAT; USOCR	OR	OFF	2012/03/16 10:54
S175	114	polysilicon near emitter and native near oxide	US-PGPUB; USPAT; USOCR	OR	OFF	2012/03/16 11:12
S176	2	polysilicon near emitter and native near oxide and (photovoltaic and solar near2 (battery cell device))	US-PGPUB; USPAT; USOCR	OR	OFF	2012/03/16 11:13
S177	367	polysilicon near emitter and "SiO.sub.2"	US-PGPUB; USPAT; USOCR	OR	OFF	2012/03/16 11:14
S178	2	polysilicon near emitter and "SiO.sub.2" and (photovoltaic and solar near2 (battery cell device))	US-PGPUB; USPAT; USOCR	OR	OFF	2012/03/16 11:15
S179	6	Borden.in. and polysilicon near emitter	US-PGPUB; USPAT; USOCR	OR	OFF	2012/03/16 11:15
S180	10	polysilicon near emitter and (photovoltaic and solar near2 (battery cell device))	US-PGPUB; USPAT; USOCR	OR	OFF	2012/03/16 11:17
S181	17	(polycyrstalline multicrystalline polysilicon) near2 emitter and (photovoltaic and solar near2 (battery cell device))	US-PGPUB; USPAT; USOCR	OR	OFF	2012/03/16 11:19
S182	0	"2008004791"	US-PGPUB; USPAT; USOCR	OR	OFF	2012/03/16 11:27
S183	2	"20080004791"	US-PGPUB; USPAT; USOCR	OR	OFF	2012/03/16 11:28
S184	0	"2008004791"	US-PGPUB; USPAT; USOCR	OR	OFF	2012/03/16 11:28
S185	6	"2008004791"	US-PGPUB; USPAT; USOCR; FPRS; EPO; JPO; DERWENT; IBM_TDB	OR	OFF	2012/03/16 11:28
S186	3869	438/72.ccls. 438/57.ccls. 438/69.ccls.	USPAT	OR	OFF	2012/03/19

		438/97.ccls. 438/98.ccls. 257/461.ccls. 257/436.ccls.				11:37
S187	7338	438/72.ccls. 438/57.ccls. 438/69.ccls. 438/97.ccls. 438/98.ccls. 257/461.ccls. 257/436.ccls.	US-PGPUB; USPAT; USOCR; FPRS; EPO; JPO; DERWENT; IBM_TDB	OR	OFF	2012/03/19 11:37
S188	552	S187 and emitter and (photovoltaic solar near (cell device battery))	US-PGPUB; USPAT; USOCR; FPRS; EPO; JPO; DERWENT; IBM_TDB	OR	OFF	2012/03/19 11:37
S189	426	S188 and oxide	US-PGPUB; USPAT; USOCR; FPRS; EPO; JPO; DERWENT; IBM_TDB	OR	OFF	2012/03/19 11:38
S190	39	S188 and oxide and polysilicon	US-PGPUB; USPAT; USOCR; FPRS; EPO; JPO; DERWENT; IBM_TDB	OR	OFF	2012/03/19 11:38
S191	419	S188 and oxide and silicon	US-PGPUB; USPAT; USOCR; FPRS; EPO; JPO; DERWENT; IBM_TDB	OR	OFF	2012/03/19 11:45
S192	237	S188 and oxide and (light near incident front) near5 (contact wir$4 connect$4)	US-PGPUB; USPAT; USOCR; FPRS; EPO; JPO; DERWENT; IBM_TDB	OR	OFF	2012/03/19 11:46
S193	12	S188 and oxide and (light near incident front) near5 (contact wir$4 connect$4) and tunnel$3 near5 oxide	US-PGPUB; USPAT; USOCR; FPRS; EPO; JPO; DERWENT; IBM_TDB	OR	OFF	2012/03/19 11:53
S194	2	"12707042"	US-PGPUB; USPAT; USOCR; FPRS; EPO; JPO; DERWENT; IBM_TDB	OR	OFF	2013/09/11 13:10
S195	16	"1270742"	US-PGPUB; USPAT; USOCR;	OR	OFF	2013/09/11 13:10

			FPRS; EPO; JPO; DERWENT; IBM_TDB			
S196	2	"12070742"	US-PGPUB; USPAT; USOCR; FPRS; EPO; JPO; DERWENT; IBM_TDB	OR	OFF	2013/09/11 13:10
S197	31	("20030134469" | "20040200520" | "20050268963" | "20060130891" | "20060157103" | "20070082206" | "3961997" | "4427839" | "4665277" | "4927770" | "5030295" | "5053083" | "5057439" | "5164019" | "5217539" | "5266125" | "5360990" | "5369291" | "5449626" | "5479018" | "5641362" | "6262359" | "6274402" | "6313395" | "6333457" | "6337283" | "6387726" | "6423568" | "6524880" | "6998288" | "7135350").PN. OR ("8222516").URPN.	US-PGPUB; USPAT; USOCR	OR	ON	2013/09/11 13:11
S198	1	"20040055894"	US-PGPUB; USPAT; USOCR	OR	ON	2013/09/11 13:26
S199	2	"11915984"	US-PGPUB; USPAT; USOCR	OR	ON	2013/09/11 13:26
S200	2	"20090159111"	US-PGPUB; USPAT; USOCR; FPRS; EPO; JPO; DERWENT; IBM_TDB	OR	ON	2013/09/11 13:32
S201	42	("3961997" | "4927770" | "5030295" | "5053083" | "5057439" | "5164019" | "5360990" | "5369291" | "5641362" | "6274402" | "6313395" | "6333457" | "6337283" | "6387726" | "6423568" | "6998288").PN. OR ("7468485").URPN.	US-PGPUB; USPAT; USOCR	OR	ON	2013/09/11 13:35
S202	26	"5057439"	US-PGPUB; USPAT; USOCR	OR	ON	2013/09/11 13:41
S203	26	("4403392" | "4502206").PN. OR ("5057439").URPN.	US-PGPUB; USPAT; USOCR	OR	ON	2013/09/11 13:42
S204	1	"12983846"	US-PGPUB; USPAT; USOCR	OR	ON	2013/09/11 13:50
S205	33	polysilicon near emitter and (solar photovoltaic).ab.	US-PGPUB; USPAT; USOCR; FPRS; EPO; JPO; DERWENT; IBM_TDB	OR	ON	2013/09/11 13:51
S206	3	"7468482"	US-PGPUB; USPAT;	OR	ON	2013/09/11 13:54

			USOCR; FPRS; EPO; JPO; DERWENT; IBM_TDB			
S207	30	"7468485"	US-PGPUB; USPAT; USOCR; FPRS; EPO; JPO; DERWENT; IBM_TDB	OR	ON	2013/09/11 13:54
S208	2	"20090288704"	US-PGPUB; USPAT; USOCR; FPRS; EPO; JPO; DERWENT; IBM_TDB	OR	ON	2013/09/11 14:01
S209	1	2009-P84539.NRAN.	DERWENT	OR	ON	2013/09/11 14:01
S210	3	"20070256728"	US-PGPUB; USPAT; USOCR; FPRS; EPO; JPO; DERWENT; IBM_TDB	OR	ON	2013/09/11 14:03
S211	2074	polysilicon near emitter	US-PGPUB; USPAT; USOCR; FPRS; EPO; JPO; DERWENT; IBM_TDB	OR	ON	2013/09/11 14:08
S212	55	polysilicon near emitter and (solar photovoltaic)	US-PGPUB; USPAT; USOCR; FPRS; EPO; JPO; DERWENT; IBM_TDB	OR	ON	2013/09/11 14:08
S213	72	polysilicon near5 emitter and (solar photovoltaic)	US-PGPUB; USPAT; USOCR; FPRS; EPO; JPO; DERWENT; IBM_TDB	OR	ON	2013/09/11 14:14
S214	17	S213 not S212	US-PGPUB; USPAT; USOCR; FPRS; EPO; JPO; DERWENT; IBM_TDB	OR	ON	2013/09/11 14:14
S215	6	"2008004791"	US-PGPUB; USPAT; USOCR; FPRS; EPO; JPO;	OR	ON	2013/09/11 14:15

			DERWENT; IBM_TDB			
S216	24	(polycyrstalline multicrystalline polysilicon) near2 emitter and (photovoltaic and solar near2 (battery cell device))	US-PGPUB; USPAT; USOCR	OR	OFF	2013/09/11 14:17
S217	4	lindholm.in. and solar near cell	US-PGPUB; USPAT; USOCR; FPRS; EPO; JPO; DERWENT; IBM_TDB	OR	ON	2013/09/11 14:54
S218	0	lindholm.in. and "136."	US-PGPUB; USPAT; USOCR; FPRS; EPO; JPO; DERWENT; IBM_TDB	OR	ON	2013/09/11 14:56
S219	3	lindholm.in. and "136".clas.	US-PGPUB; USPAT; USOCR; FPRS; EPO; JPO; DERWENT; IBM_TDB	OR	ON	2013/09/11 14:56
S220	2	polysilicon near solar same emitter	US-PGPUB; USPAT; USOCR; FPRS; EPO; JPO; DERWENT; IBM_TDB	OR	ON	2013/09/11 14:59
S221	20	("3900943" | "4062038" | "4171997" | "4197141" | "4219368" | "4230508" | "4249957" | "4278473" | "4283589" | "4320168" | "4366338").PN. OR ("4431858").URPN.	US-PGPUB; USPAT; USOCR	OR	ON	2013/09/11 15:00
S222	6	("20030183270" | "20090255574" | "20090283138" | "3969163" | "4431858" | "4571448").PN. OR ("8283557").URPN.	US-PGPUB; USPAT; USOCR	OR	ON	2013/09/11 15:02
S223	26	("4403392" | "4502206").PN. OR ("5057439").URPN.	US-PGPUB; USPAT; USOCR	OR	ON	2013/09/11 16:29
S224	2	"12166266"	US-PGPUB; USPAT; USOCR; FPRS; EPO; JPO; DERWENT; IBM_TDB	OR	ON	2013/09/11 16:43
S225	395	polysilicon near5 emitter same oxide same dopant	US-PGPUB; USPAT; USOCR; FPRS; EPO; JPO; DERWENT; IBM_TDB	OR	ON	2013/09/11 16:45

S226	377	polysilicon near5 emitter same oxide with dop$3	US-PGPUB; USPAT; USOCR; FPRS; EPO; JPO; DERWENT; IBM_TDB	OR	ON	2013/09/11 16:45
S227	26	polysilicon near5 emitter same oxide with dop$3 same phosphorus	US-PGPUB; USPAT; USOCR; FPRS; EPO; JPO; DERWENT; IBM_TDB	OR	ON	2013/09/11 16:45
S228	6	"11201817"	US-PGPUB; USPAT; USOCR; FPRS; EPO; JPO; DERWENT; IBM_TDB	OR	ON	2013/09/11 16:48
S229	53	Swanson near Richard and solar near cell	US-PGPUB; USPAT; USOCR; FPRS; EPO; JPO; DERWENT; IBM_TDB	OR	ON	2013/09/11 16:52
S230	158	"5053083"	US-PGPUB; USPAT; USOCR; FPRS; EPO; JPO; DERWENT; IBM_TDB	OR	ON	2013/09/11 16:53
S231	38	("20040200520" | "4234352" | "4478879" | "4920639" | "4927770" | "5053083" | "5320684" | "5538564" | "5641362" | "6624737").PN. OR ("7339110").URPN.	US-PGPUB; USPAT; USOCR	OR	ON	2013/09/11 17:03
S232	687	phosphosilicate near glass same (dielectric oxide) with (passivation capping)	US-PGPUB; USPAT; USOCR	OR	ON	2013/09/11 17:14
S233	41	phosphosilicate near glass same (dielectric oxide) with (passivation capping) same polysilicon	US-PGPUB; USPAT; USOCR	OR	ON	2013/09/11 17:15
S234	0	"2008004791"	US-PGPUB; USPAT; USOCR	OR	ON	2013/09/11 17:17
S235	2	"20080004791"	US-PGPUB; USPAT; USOCR	OR	ON	2013/09/11 17:17
S236	59	"5693578"	US-PGPUB; USPAT; USOCR	OR	ON	2013/09/11 17:17
S237	11	(back near surface near field BSF) same polysilicon	US-PGPUB; USPAT; USOCR	OR	ON	2013/09/11 17:19
S238	14	(back near surface near field BSF) same polysilicon	US-PGPUB; USPAT;	OR	ON	2013/09/11 17:21

			USOCR; FPRS; EPO; JPO; DERWENT; IBM_TDB			
S239	3	S238 not S237	US-PGPUB; USPAT; USOCR; FPRS; EPO; JPO; DERWENT; IBM_TDB	OR	ON	2013/09/11 17:21
S240	81	(back near surface near field BSF) same polycrystalline near silicon	US-PGPUB; USPAT; USOCR; FPRS; EPO; JPO; DERWENT; IBM_TDB	OR	ON	2013/09/11 17:23
S241	81	S240 not S238	US-PGPUB; USPAT; USOCR; FPRS; EPO; JPO; DERWENT; IBM_TDB	OR	ON	2013/09/11 17:23
S242	157	(back near surface near field BSF) and polysilicon	US-PGPUB; USPAT; USOCR; FPRS; EPO; JPO; DERWENT; IBM_TDB	OR	ON	2013/09/11 17:35
S243	143	S242 not S238	US-PGPUB; USPAT; USOCR; FPRS; EPO; JPO; DERWENT; IBM_TDB	OR	ON	2013/09/11 17:35
S244	476	(back near surface near field BSF) same passivat$4 and (solar photovoltaic).ab.	US-PGPUB; USPAT; USOCR; FPRS; EPO; JPO; DERWENT; IBM_TDB	OR	ON	2013/09/11 17:45
S245	108	(back near surface near field BSF) same passivat$4 and (solar photovoltaic).ab. and heterojunction	US-PGPUB; USPAT; USOCR; FPRS; EPO; JPO; DERWENT; IBM_TDB	OR	ON	2013/09/11 17:45
S246	26	"4315097"	US-PGPUB; USPAT; USOCR; FPRS; EPO; JPO; DERWENT; IBM_TDB	OR	ON	2013/09/11 18:00

S247	2	"20040205520"	US-PGPUB; USPAT; USOCR; FPRS; EPO; JPO; DERWENT; IBM_TDB	OR	ON	2013/09/11 18:02
S248	3	"20040200520"	US-PGPUB; USPAT; USOCR; FPRS; EPO; JPO; DERWENT; IBM_TDB	OR	ON	2013/09/11 18:02
S249	25	(back near surface near field BSF) same passivat$4 and (solar photovoltaic).ab. and polysilicon	US-PGPUB; USPAT; USOCR; FPRS; EPO; JPO; DERWENT; IBM_TDB	OR	ON	2013/09/11 18:09
S250	717	(back near surface near field BSF) same (capping oxide dielectric passivat$4) and (solar photovoltaic).ab.	US-PGPUB; USPAT; USOCR; FPRS; EPO; JPO; DERWENT; IBM_TDB	OR	ON	2013/09/11 18:10
S251	75	(back near surface near field BSF) same (capping oxide dielectric passivat$4) and (solar photovoltaic).ab. and Phosphosilicate	US-PGPUB; USPAT; USOCR; FPRS; EPO; JPO; DERWENT; IBM_TDB	OR	ON	2013/09/11 18:11
S252	114	(back near surface near field BSF) same (capping oxide dielectric passivat$4) and (solar photovoltaic).ab. and (Phosphosilicate PSG)	US-PGPUB; USPAT; USOCR; FPRS; EPO; JPO; DERWENT; IBM_TDB	OR	ON	2013/09/11 18:16
S253	39	S252 not S251	US-PGPUB; USPAT; USOCR; FPRS; EPO; JPO; DERWENT; IBM_TDB	OR	ON	2013/09/11 18:16
S254	158	(back near surface near field BSF) same (capping oxide dielectric passivat$4) and (Phosphosilicate PSG)	US-PGPUB; USPAT; USOCR; FPRS; EPO; JPO; DERWENT; IBM_TDB	OR	ON	2013/09/11 18:18
S255	44	S254 not S252	US-PGPUB; USPAT; USOCR; FPRS; EPO; JPO;	OR	ON	2013/09/11 18:18

			DERWENT; IBM_TDB			
S256	1163	(back near surface near field BSF) same (capping oxide dielectric passivat$4)	US-PGPUB; USPAT; USOCR; FPRS; EPO; JPO; DERWENT; IBM_TDB	OR	ON	2013/09/11 18:20
S257	727	(back near surface near field BSF) same (capping oxide dielectric passivat$4) and (solar photovoltaic photoelectric).ab.	US-PGPUB; USPAT; USOCR; FPRS; EPO; JPO; DERWENT; IBM_TDB	OR	ON	2013/09/11 18:21
S258	33	(back near surface near field BSF) same (capping oxide dielectric passivat$4) and (solar photovoltaic photoelectric).ab. and polysilicon	US-PGPUB; USPAT; USOCR; FPRS; EPO; JPO; DERWENT; IBM_TDB	OR	ON	2013/09/11 18:21
S259	703	polysilicon with PSG with (dielectric oxide)	US-PGPUB; USPAT; USOCR; FPRS; EPO; JPO; DERWENT; IBM_TDB	OR	ON	2013/09/11 18:30
S260	81	polysilicon with PSG with (dielectric oxide) and emitter	US-PGPUB; USPAT; USOCR; FPRS; EPO; JPO; DERWENT; IBM_TDB	OR	ON	2013/09/11 18:31
S261	225	polysilicon with PSG with (dielectric oxide) same dop$3	US-PGPUB; USPAT; USOCR; FPRS; EPO; JPO; DERWENT; IBM_TDB	OR	ON	2013/09/11 18:33
S262	2	polysilicon with PSG with (dielectric oxide) same dop$3 and (solar photovoltaic)	US-PGPUB; USPAT; USOCR; FPRS; EPO; JPO; DERWENT; IBM_TDB	OR	ON	2013/09/11 18:34
S263	44	polysilicon with PSG with (dielectric oxide) and (solar photovoltaic)	US-PGPUB; USPAT; USOCR; FPRS; EPO; JPO; DERWENT; IBM_TDB	OR	ON	2013/09/11 18:34
S264	161	(phosphosilicate PSG) with (dielectric oxide) same dop$4 and (solar photovoltaic)	US-PGPUB; USPAT; USOCR;	OR	ON	2013/09/11 18:35

			FPRS; EPO; JPO; DERWENT; IBM_TDB			
S265	62	(phosphosilicate PSG) with (dielectric oxide) same dop$4 and (solar photovoltaic).ab.	US-PGPUB; USPAT; USOCR; FPRS; EPO; JPO; DERWENT; IBM_TDB	OR	ON	2013/09/11 18:35
S266	103	(phosphosilicate PSG borosilicate BSG) with (dielectric oxide) same dop$4 and (solar photovoltaic).ab.	US-PGPUB; USPAT; USOCR; FPRS; EPO; JPO; DERWENT; IBM_TDB	OR	ON	2013/09/11 18:42
S267	41	S266 not S265	US-PGPUB; USPAT; USOCR; FPRS; EPO; JPO; DERWENT; IBM_TDB	OR	ON	2013/09/11 18:42
S268	2	"20080173347"	US-PGPUB; USPAT; USOCR; FPRS; EPO; JPO; DERWENT; IBM_TDB	OR	ON	2013/09/11 18:43
S269	3	"20060196535"	US-PGPUB; USPAT; USOCR; FPRS; EPO; JPO; DERWENT; IBM_TDB	OR	ON	2013/09/11 18:45
S270	179	"4927770"	US-PGPUB; USPAT; USOCR; FPRS; EPO; JPO; DERWENT; IBM_TDB	OR	ON	2013/09/11 18:46
S271	57	(phosphosilicate PSG borosilicate BSG) with (dielectric oxide cap$4) same dop$4 and (back near surface near field BSF)	US-PGPUB; USPAT; USOCR; FPRS; EPO; JPO; DERWENT; IBM_TDB	OR	ON	2013/09/11 18:50
S272	145	(phosphosilicate PSG borosilicate BSG) with (dielectric oxide cap$4) and (back near surface near field BSF)	US-PGPUB; USPAT; USOCR; FPRS; EPO; JPO; DERWENT; IBM_TDB	OR	ON	2013/09/11 18:52
S273	0	S271 not S271	US-PGPUB;	OR	ON	2013/09/11

			USPAT; USOCR; FPRS; EPO; JPO; DERWENT; IBM_TDB			18:52
S274	88	S272 not S271	US-PGPUB; USPAT; USOCR; FPRS; EPO; JPO; DERWENT; IBM_TDB	OR	ON	2013/09/11 18:53
S275	190	(phosphosilicate PSG borosilicate BSG) with (dielectric oxide cap$4) with (dop$4) with (burn$4 escap$4 leav$4 diffus$4)	US-PGPUB; USPAT; USOCR; FPRS; EPO; JPO; DERWENT; IBM_TDB	OR	ON	2013/09/12 10:22
S276	130	(phosphosilicate PSG borosilicate BSG) with (dielectric "SiO.sub.2" silicon near oxide cap$4) with (dop$4) with (burn$4 escap$4 leav$4 diffus$4)	US-PGPUB; USPAT; USOCR; FPRS; EPO; JPO; DERWENT; IBM_TDB	OR	ON	2013/09/12 10:28
S277	341	(phosphosilicate PSG borosilicate BSG) with (dielectric "SiO.sub.2" silicon near oxide cap$4) and (solar photoelectric photovoltaic).ab.	US-PGPUB; USPAT; USOCR; FPRS; EPO; JPO; DERWENT; IBM_TDB	OR	ON	2013/09/12 10:39
S278	14	(phosphosilicate PSG borosilicate BSG) with (dielectric "SiO.sub.2" silicon near oxide cap$4) with (dop$4) with (burn$4 escap$4 leav$4 diffus$4) and (solar photoelectric photovoltaic).ab.	US-PGPUB; USPAT; USOCR; FPRS; EPO; JPO; DERWENT; IBM_TDB	OR	ON	2013/09/12 10:42
S279	23	(phosphosilicate PSG borosilicate BSG) with (dielectric "SiO.sub.2" silicon near oxide cap$4) with (dop$4) with (burn$4 escap$4 leav$4 diffus$4) and (solar photoelectric photovoltaic)	US-PGPUB; USPAT; USOCR; FPRS; EPO; JPO; DERWENT; IBM_TDB	OR	ON	2013/09/12 10:44
S280	18	(phosphosilicate PSG borosilicate BSG) with (cap$4) with (dop$4) and (solar photoelectric photovoltaic)	US-PGPUB; USPAT; USOCR; FPRS; EPO; JPO; DERWENT; IBM_TDB	OR	ON	2013/09/12 10:46
S281	35	("3895975" | "4056879" | "4106047" | "4131486" | "4226017" | "4916503" | "5538564" | "5641362" | "5951742" | "5973260" | "6071753").PN. OR ("6262359").URPN.	US-PGPUB; USPAT; USOCR	OR	ON	2013/09/12 12:04
S282	6	(oxide with tunnel) same (pn near	US-PGPUB;	OR	ON	2013/09/12

		junction) and (solar photovoltaic).ab.	USPAT; USOCR; FPRS; EPO; JPO; DERWENT; IBM_TDB			12:08
S283	6	(oxide with tunnel$5) same (pn near junction) and (solar photovoltaic).ab.	US-PGPUB; USPAT; USOCR; FPRS; EPO; JPO; DERWENT; IBM_TDB	OR	ON	2013/09/12 12:10
S284	86	(oxide with tunnel$5) same (junction) and (solar photovoltaic).ab.	US-PGPUB; USPAT; USOCR; FPRS; EPO; JPO; DERWENT; IBM_TDB	OR	ON	2013/09/12 12:10
S285	80	S284 not S283	US-PGPUB; USPAT; USOCR; FPRS; EPO; JPO; DERWENT; IBM_TDB	OR	ON	2013/09/12 12:10
S286	3	"20070256728"	US-PGPUB; USPAT; USOCR; FPRS; EPO; JPO; DERWENT; IBM_TDB	OR	ON	2013/09/12 12:12
S287	52	"4272641"	US-PGPUB; USPAT; USOCR; FPRS; EPO; JPO; DERWENT; IBM_TDB	OR	ON	2013/09/12 12:14
S288	211	(oxide with tunnel$5) and (solar photovoltaic).ab.	US-PGPUB; USPAT; USOCR; FPRS; EPO; JPO; DERWENT; IBM_TDB	OR	ON	2013/09/12 12:15
S289	88	thin same (oxide with tunnel$5) and (solar photovoltaic).ab.	US-PGPUB; USPAT; USOCR; FPRS; EPO; JPO; DERWENT; IBM_TDB	OR	ON	2013/09/12 12:15
S290	87	S289 not S287	US-PGPUB; USPAT; USOCR; FPRS; EPO; JPO; DERWENT;	OR	ON	2013/09/12 12:15

			IBM_TDB			
S291	1100	(oxide with tunnel$5) and (solar photovoltaic photoelectric)	US-PGPUB; USPAT; USOCR; FPRS; EPO; JPO; DERWENT; IBM_TDB	OR	ON	2013/09/12 12:22
S292	301	(oxide with tunnel$5) same (pn junction p-type n-type) and (solar photovoltaic photoelectric)	US-PGPUB; USPAT; USOCR; FPRS; EPO; JPO; DERWENT; IBM_TDB	OR	ON	2013/09/12 12:24
S293	243	(S292 not S289)	US-PGPUB; USPAT; USOCR; FPRS; EPO; JPO; DERWENT; IBM_TDB	OR	ON	2013/09/12 12:24
S294	7	"4495375"	US-PGPUB; USPAT; USOCR; FPRS; EPO; JPO; DERWENT; IBM_TDB	OR	ON	2013/09/12 12:31
S295	6	("3990097" | "4338482").PN. OR ("4495375").URPN.	US-PGPUB; USPAT; USOCR	OR	ON	2013/09/12 12:31
S296	24	("3559281" | "4013485" | "4062102" | "4253881" | "4403239" | "4404421" | "4404422" | "4495375" | "4640002" | "4806496" | "4828628").PN. OR ("4891325").URPN.	US-PGPUB; USPAT; USOCR	OR	ON	2013/09/12 12:32
S297	60	"6998288"	US-PGPUB; USPAT; USOCR; FPRS; EPO; JPO; DERWENT; IBM_TDB	OR	ON	2013/09/12 12:41
S298	53	("20040200520" | "4927770" | "5053083" | "5164019" | "5217539" | "5360990" | "5369291" | "6274402" | "6313395" | "6333457" | "6337283" | "6387726" | "6423568").PN. OR ("6998288").URPN.	US-PGPUB; USPAT; USOCR	OR	ON	2013/09/12 12:55
S299	23	Sunpower.as. and oxide.clm.	US-PGPUB; USPAT; USOCR; FPRS; EPO; JPO; DERWENT; IBM_TDB	OR	ON	2013/09/12 13:35
S300	11	Sunpower.as. and (dielectric oxide).clm. and (polysilicon).clm.	US-PGPUB; USPAT; USOCR;	OR	ON	2013/09/12 16:16

			FPRS; EPO; JPO; DERWENT; IBM_TDB			
S301	6	"7737357"	US-PGPUB; USPAT; USOCR; FPRS; EPO; JPO; DERWENT; IBM_TDB	OR	ON	2013/09/12 16:18
S302	60	"6998288"	US-PGPUB; USPAT; USOCR; FPRS; EPO; JPO; DERWENT; IBM_TDB	OR	ON	2013/09/12 16:19
S303	13	"7705237"	US-PGPUB; USPAT; USOCR; FPRS; EPO; JPO; DERWENT; IBM_TDB	OR	ON	2013/09/12 16:19
S304	2	"8486746"	US-PGPUB; USPAT; USOCR; FPRS; EPO; JPO; DERWENT; IBM_TDB	OR	ON	2013/09/12 16:20
S305	8	"7851698"	US-PGPUB; USPAT; USOCR; FPRS; EPO; JPO; DERWENT; IBM_TDB	OR	ON	2013/09/12 16:21
S306	4	"8409912"	US-PGPUB; USPAT; USOCR; FPRS; EPO; JPO; DERWENT; IBM_TDB	OR	ON	2013/09/12 16:21
S307	14	Sunpower.as. and (dielectric oxide cap$4).clm. and (polysilicon polycrystalline).clm.	US-PGPUB; USPAT; USOCR; FPRS; EPO; JPO; DERWENT; IBM_TDB	OR	ON	2013/09/12 16:22
S308	3	S307 not S300	US-PGPUB; USPAT; USOCR; FPRS; EPO; JPO; DERWENT; IBM_TDB	OR	ON	2013/09/12 16:22
S309	2087	polysilicon near emitter	US-PGPUB;	OR	ON	2013/12/12

			USPAT; USOCR; FPRS; EPO; JPO; DERWENT; IBM_TDB			11:10
S310	23	polysilicon near emitter same (PSG BSG)	US-PGPUB; USPAT; USOCR; FPRS; EPO; JPO; DERWENT; IBM_TDB	OR	ON	2013/12/12 11:10
S311	2	"20090159111"	US-PGPUB; USPAT; USOCR; FPRS; EPO; JPO; DERWENT; IBM_TDB	OR	ON	2014/02/10 14:32
S312	2319	polysilicon near emitter	US-PGPUB; USPAT; USOCR; FPRS; EPO; JPO; DERWENT; IBM_TDB	OR	ON	2014/02/10 15:14
S313	55	polysilicon near emitter and (solar photovoltaic).ab.	US-PGPUB; USPAT; USOCR; FPRS; EPO; JPO; DERWENT; IBM_TDB	OR	ON	2014/02/10 15:14
S314	310	(front near surface near field FSF) and (solar photovoltaic).ab.	US-PGPUB; USPAT; USOCR; FPRS; EPO; JPO; DERWENT; IBM_TDB	OR	ON	2014/02/10 15:29
S315	109	(front near surface near field FSF) and (solar photovoltaic).ab. and BSF	US-PGPUB; USPAT; USOCR; FPRS; EPO; JPO; DERWENT; IBM_TDB	OR	ON	2014/02/10 15:29
S316	25	("4158591").PN. OR ("5899704").URPN.	US-PGPUB; USPAT; USOCR	OR	ON	2014/02/10 15:38
S317	48	Pillay and "136".clas.	US-PGPUB; USPAT; USOCR; FPRS; EPO; JPO; DERWENT; IBM_TDB	OR	ON	2014/02/10 15:56
S318	1	"7863078"	US-PGPUB; USPAT; USOCR	OR	OFF	2014/02/10 16:12

S319	28	polysilicon near contact and (solar photovoltaic).ab.	US-PGPUB; USPAT; USOCR; FPRS; EPO; JPO; DERWENT; IBM_TDB	OR	ON	2014/02/11 11:12
S320	952	polysilicon near contact and (solar photovoltaic).ab. and BSF or FSF	US-PGPUB; USPAT; USOCR; FPRS; EPO; JPO; DERWENT; IBM_TDB	OR	ON	2014/02/11 11:12
S321	0	polysilicon near contact and (solar photovoltaic).ab. and (BSF or FSF)	US-PGPUB; USPAT; USOCR; FPRS; EPO; JPO; DERWENT; IBM_TDB	OR	ON	2014/02/11 11:13

EAST Search History (Interference)

<This search history is empty>

2/11/2014 3:48:24 PM
C:\Users\dpillay\Documents\EAST\Workspaces\13495577.wsp

Search Notes	Application/Control No.	Applicant(s)/Patent Under Reexamination
	13495577	COUSINS, PETER JOHN
	Examiner	**Art Unit**
	DEVINA PILLAY	1755

CPC- SEARCHED

Symbol	Date	Examiner

CPC COMBINATION SETS - SEARCHED

Symbol	Date	Examiner

US CLASSIFICATION SEARCHED

Class	Subclass	Date	Examiner
136	261	02/11/2014	DP

SEARCH NOTES

Search Notes	Date	Examiner
EAST Text Search (See Search History)	02/11/2014	
Inventor name search in PALM	02/11/2014	

INTERFERENCE SEARCH

US Class/ CPC Symbol	US Subclass / CPC Group	Date	Examiner

Docket No. 10031.004210
April 16, 2014

IN THE UNITED STATES PATENT AND TRADEMARK OFFICE

In re Application of:

Peter John COUSINS

Application No.:	13/495,577	Examiner:	PILLAY, DEVINA
Filing Date:	June 13, 2012	Art Unit:	1755

Title: FRONT CONTACT SOLAR CELL WITH FORMED EMITTER

RESPONSE TO FINAL OFFICE ACTION

INTRODUCTORY COMMENTS

This paper is responsive to the Final Office Action mailed on February 26, 2014 ("final office action").

ARGUMENTS

Claims 9-16 and 21-32 remain in the application and stand finally rejected. Reconsideration of the final rejection is respectfully requested in light of the following reasons.

Claim Rejections – 35 U.S.C. §103

Claims 9-12, 16, 21-25, and 27 are rejected under pre-AIA 35 U.S.C. §103(a) as being unpatentable over Silvestre et al., *Series Resistance in Double-Polysilicon Contacted Solar Cells* ("Silvestre") in view of Lindholm et al., *Heavily Doped Polysilicon-Contact Solar Cells* ("Lindholm") and further in view of US 6,998,288 to Smith et al. ("Smith"). The rejection is respectfully traversed.

Claim 9 is patentable over the combination of Silvestre, Lindholm, and Smith at least for reciting: "diffusing P-type dopants from the P-type dopant source to the layer of polysilicon to form a ***backside junction*** with the N-type silicon substrate" (emphasis). In the embodiment of claim 9, the layer of polysilicon forms a backside junction with the silicon substrate. It is respectfully submitted that this feature of claim 9 is not taught or suggested by the combination of Silvestre, Lindholm, and Smith.

During prosecution, pending claims are given their broadest reasonable interpretation consistent with the specification as interpreted by one of ordinary skill in the art. *In re Am. Acad. of Sci. Tech. Ctr.*, 367 F.3d 1359, 1364 (Fed. Cir. 2004). Here, claim 9 recites that the layer of polysilicon forms a backside junction with the silicon substrate. Accordingly, the layer of polysilicon is P-type when the silicon substrate is N-type. In marked contrast, Silvestre discloses a solar cell with a polysilicon back surface field (BSF). As is well known, ***a BSF has the same dopant type as the substrate***, but at a higher concentration to keep minority charge carriers away from the back surface. Accordingly, because Silvestre FIG. 1 shows a P-type BSF, Silvestre does not disclose an N-type substrate.

The final office action suggests that Lindholm discloses that the "contacts can be on both n-type or p-type solar cells" and that it would have been obvious to modify

Silvestre to use an N-type substrate as disclosed by Lindholm. Applicants respectfully disagree with this reading of Lindholm.

Lindholm, like Silvestre, also discloses a polysilicon BSF (Lindholm, Abstract, Table I). Lindholm discloses that a polysilicon BSF may be used on both N-type and P-type substrates. However, Lindholm does not teach or suggest that a P-type polysilicon BSF may be used with an N-type substrate or vice versa. Because a BSF needs to repel the minority carriers of the solar cell, a BSF (either in-substrate or polysilicon) necessarily has the same dopant type as the substrate.

Therefore, the combination of Silvestre and Lindholm teaches that a P-type polysilicon BSF must be used with a P-type substrate and an N-type polysilicon BSF must be used with an N-type substrate. In other words, Silvestre and Lindholm discloses a solar cell where the polysilicon and the substrate necessarily have the same dopant type in order to form the polysilicon BSF, which is the primary teaching of Silvestre and Lindholm. Smith does not add to the combination of Silvestre and Lindholm in this regard. In marked contrast, claim 9 recites that the polysilicon forms a backside junction with the silicon substrate, i.e., the polysilicon and the silicon substrate have different dopant types. More specifically, claim 9 recites that the P-type layer of polysilicon forms a backside junction with the N-type silicon substrate.

It is thus respectfully submitted that claim 9 is patentable over the combination of Silvestre, Lindholm, and Smith.

Claims 10-12 and 16 are patentable over the combination of Silvestre, Lindholm, and Smith at least for depending from claim 9.

Claim 21 is patentable over the combination of Silvestre, Lindholm, and Smith at least for reciting: "diffusing dopants from the first dopant source layer to the ***layer of polysilicon to form a backside junction with the silicon substrate***" (emphasis added). It is respectfully submitted that the combination of Silvestre, Lindholm, and Smith does not teach or suggest diffusing dopants to the layer of polysilicon to form a backside junction with the silicon substrate. In the combination of Silvestre, Lindholm, and Smith, the polysilicon forms a BSF with the substrate, as opposed to a backside junction with the substrate.

Claims 22-25 and 27 are patentable over the combination of Silvestre, Lindholm, and Smith at least for depending from claim 21.

Claims 13, 14, and 26 are rejected under pre-AIA 35 U.S.C. §103(a) as being unpatentable over Silvestre, Lindholm, and Smith and further in view of US 6,262,359 to Meier et al. ("Meier"). The rejection is respectfully traversed.

Claims 13 and 14 are patentable over the combination of Silvestre, Lindholm, Smith, and Meier at least for depending from claim 9.

Claim 26 is patentable over the combination of Silvestre, Lindholm, Smith, and Meier at least for depending from claim 21.

Claims 28-30 are rejected under pre-AIA 35 U.S.C. §103(a) as being unpatentable over Silvestre in view of Lindholm and further in view of US 5,057,439 to Swanson et al. ("Swanson"). The rejection is respectfully traversed.

Claim 28 is patentable over the combination of Silvestre, Lindholm, and Swanson at least for reciting: "diffusing dopants into the ***layer of polysilicon to form a backside junction with the silicon substrate***" (emphasis added). It is respectfully submitted that the combination of Silvestre, Lindholm, and Swanson does not teach or suggest diffusing dopants into the layer of polysilicon to form a backside junction with the silicon substrate. In the combination of Silvestre, Lindholm, and Swanson, the polysilicon forms a BSF with the substrate, as opposed to a backside junction with the substrate.

Claims 29 and 30 are patentable over the combination of Silvestre, Lindholm, and Swanson at least for depending from claim 28.

Claims 31 and 32 are rejected under pre-AIA 35 U.S.C. §103(a) as being unpatentable over Silvestre, Lindholm, and Swanson and further in view of Smith. The rejection is respectfully traversed.

Claims 31 and 32 are patentable over the combination of Silvestre, Lindholm, Swanson, and Smith at least for depending from claim 28.

<u>Double Patenting</u>

A terminal disclaimer that obviates the Double Patenting rejection based on US 8,207,444 to Cousins is submitted herewith.

Respectfully submitted,

Dated: April 16, 2014

/Patrick Benedicto/

Patrick D. Benedicto, Reg. No. 40,909
Okamoto & Benedicto LLP
P.O. Box 641330
San Jose, CA 95164
Tel.: (408)436-2110
Fax.: (408)436-2114

PTO/SB/26 (08-11)
Approved for use through 07/31/2012. OMB 0651-0031
U.S. Patent and Trademark Office; U.S. DEPARTMENT OF COMMERCE
Under the Paperwork Reduction Act of 1995, no persons are required to respond to a collection of information unless it displays a valid OMB control number.

TERMINAL DISCLAIMER TO OBVIATE A DOUBLE PATENTING REJECTION OVER A "PRIOR" PATENT

Docket Number (Optional) 10031.004210

In re Application of: Peter John COUSINS

Application No.: 13/495,577

Filed: 06/13/2012

For: FRONT CONTACT SOLAR CELL WITH FORMED EMITTER

The owner*, SunPower Corporation, of 100 percent interest in the instant application hereby disclaims, except as provided below, the terminal part of the statutory term of any patent granted on the instant application which would extend beyond the expiration date of the full statutory term of **prior patent** No. 8,207,444 as the term of said **prior patent** is presently shortened by any terminal disclaimer. The owner hereby agrees that any patent so granted on the instant application shall be enforceable only for and during such period that it and the **prior patent** are commonly owned. This agreement runs with any patent granted on the instant application and is binding upon the grantee, its successors or assigns.

In making the above disclaimer, the owner does not disclaim the terminal part of the term of any patent granted on the instant application that would extend to the expiration date of the full statutory term of the **prior patent**, "as the term of said **prior patent** is presently shortened by any terminal disclaimer," in the event that said **prior patent** later:

expires for failure to pay a maintenance fee;
is held unenforceable;
is found invalid by a court of competent jurisdiction;
is statutorily disclaimed in whole or terminally disclaimed under 37 CFR 1.321;
has all claims canceled by a reexamination certificate;
is reissued; or
is in any manner terminated prior to the expiration of its full statutory term as presently shortened by any terminal disclaimer.

Check either box 1 or 2 below, if appropriate.

1. ☐ For submissions on behalf of a business/organization (e.g., corporation, partnership, university, government agency, etc.), the undersigned is empowered to act on behalf of the business/organization.

I hereby declare that all statements made herein of my own knowledge are true and that all statements made on information and belief are believed to be true; and further that these statements were made with the knowledge that willful false statements and the like so made are punishable by fine or imprisonment, or both, under Section 1001 of Title 18 of the United States Code and that such willful false statements may jeopardize the validity of the application or any patent issued thereon.

2. ☑ The undersigned is an attorney or agent of record. Reg. No. 40,909

/Patrick D. Benedicto/ — Signature
April 16, 2014 — Date

PATRICK D. BENEDICTO — Typed or printed name

408.436.2110 — Telephone Number

☑ Terminal disclaimer fee under 37 CFR 1.20(d) included.

WARNING: Information on this form may become public. Credit card information should not be included on this form. Provide credit card information and authorization on PTO-2038.

*Statement under 37 CFR 3.73(b) is required if terminal disclaimer is signed by the assignee (owner). Form PTO/SB/96 may be used for making this certification. See MPEP § 324.

This collection of information is required by 37 CFR 1.321. The information is required to obtain or retain a benefit by the public which is to file (and by the USPTO to process) an application. Confidentiality is governed by 35 U.S.C. 122 and 37 CFR 1.11 and 1.14. This collection is estimated to take 12 minutes to complete, including gathering, preparing, and submitting the completed application form to the USPTO. Time will vary depending upon the individual case. Any comments on the amount of time you require to complete this form and/or suggestions for reducing this burden, should be sent to the Chief Information Officer, U.S. Patent and Trademark Office, U.S. Department of Commerce, P.O. Box 1450, Alexandria, VA 22313-1450. DO NOT SEND FEES OR COMPLETED FORMS TO THIS ADDRESS. **SEND TO: Commissioner for Patents, P.O. Box 1450, Alexandria, VA 22313-1450.**

If you need assistance in completing the form, call 1-800-PTO-9199 and select option 2.

Electronic Patent Application Fee Transmittal

Application Number:	13495577
Filing Date:	13-Jun-2012
Title of Invention:	FRONT CONTACT SOLAR CELL WITH FORMED EMITTER
First Named Inventor/Applicant Name:	Peter John COUSINS
Filer:	Patrick D. Benedicto/jina mangaoang
Attorney Docket Number:	10031.004210

Filed as Large Entity

Utility under 35 USC 111(a) Filing Fees

Description	Fee Code	Quantity	Amount	Sub-Total in USD($)
Basic Filing:				
Pages:				
Claims:				
Miscellaneous-Filing:				
Petition:				
Patent-Appeals-and-Interference:				
Post-Allowance-and-Post-Issuance:				
Extension-of-Time:				

Description	Fee Code	Quantity	Amount	Sub-Total in USD($)
Miscellaneous:				
Statutory or Terminal Disclaimer	1814	1	160	160
		Total in USD ($)		**160**

Electronic Acknowledgement Receipt

EFS ID:	18780639
Application Number:	13495577
International Application Number:	
Confirmation Number:	3380
Title of Invention:	FRONT CONTACT SOLAR CELL WITH FORMED EMITTER
First Named Inventor/Applicant Name:	Peter John COUSINS
Customer Number:	74254
Filer:	Patrick D. Benedicto/jina mangaoang
Filer Authorized By:	Patrick D. Benedicto
Attorney Docket Number:	10031.004210
Receipt Date:	16-APR-2014
Filing Date:	13-JUN-2012
Time Stamp:	16:58:43
Application Type:	Utility under 35 USC 111(a)

Payment information:

Submitted with Payment	yes
Payment Type	Credit Card
Payment was successfully received in RAM	$160
RAM confirmation Number	6017
Deposit Account	
Authorized User	

File Listing:

Document Number	Document Description	File Name	File Size(Bytes)/ Message Digest	Multi Part /.zip	Pages (if appl.)

1		S0123US1_RFOAmailed26Feb2014.pdf	333199 54651e598ca37be963ada4af9888f168c5d985bc	yes	5
	Multipart Description/PDF files in .zip description				
	Document Description		**Start**	**End**	
	Response After Final Action		1	1	
	Applicant Arguments/Remarks Made in an Amendment		2	5	
Warnings:					
Information:					
2	Terminal Disclaimer Filed	S0123US1_TerminalDisclaimer.pdf	35902 49c6ff3e6490c7df4a9a839263f80768e7fb5b5e	no	1
Warnings:					
Information:					
3	Fee Worksheet (SB06)	fee-info.pdf	30379 9c1edb10ebb496c9e3f9e5849e3e9f89bcfec30a	no	2
Warnings:					
Information:					
		Total Files Size (in bytes):	399480		

This Acknowledgement Receipt evidences receipt on the noted date by the USPTO of the indicated documents, characterized by the applicant, and including page counts, where applicable. It serves as evidence of receipt similar to a Post Card, as described in MPEP 503.

<u>New Applications Under 35 U.S.C. 111</u>
If a new application is being filed and the application includes the necessary components for a filing date (see 37 CFR 1.53(b)-(d) and MPEP 506), a Filing Receipt (37 CFR 1.54) will be issued in due course and the date shown on this Acknowledgement Receipt will establish the filing date of the application.

<u>National Stage of an International Application under 35 U.S.C. 371</u>
If a timely submission to enter the national stage of an international application is compliant with the conditions of 35 U.S.C. 371 and other applicable requirements a Form PCT/DO/EO/903 indicating acceptance of the application as a national stage submission under 35 U.S.C. 371 will be issued in addition to the Filing Receipt, in due course.

<u>New International Application Filed with the USPTO as a Receiving Office</u>
If a new international application is being filed and the international application includes the necessary components for an international filing date (see PCT Article 11 and MPEP 1810), a Notification of the International Application Number and of the International Filing Date (Form PCT/RO/105) will be issued in due course, subject to prescriptions concerning national security, and the date shown on this Acknowledgement Receipt will establish the international filing date of the application.

PTO/SB/06 (09-11)
Approved for use through 1/31/2014. OMB 0651-0032
U.S. Patent and Trademark Office; U.S. DEPARTMENT OF COMMERCE
Under the Paperwork Reduction Act of 1995, no persons are required to respond to a collection of information unless it displays a valid OMB control number.

PATENT APPLICATION FEE DETERMINATION RECORD

Substitute for Form PTO-875

Application or Docket Number	Filing Date	
13/495,577	06/13/2012	☐ To be Mailed

ENTITY: ☒ LARGE ☐ SMALL ☐ MICRO

APPLICATION AS FILED – PART I

FOR	(Column 1) NUMBER FILED	(Column 2) NUMBER EXTRA	RATE ($)	FEE ($)
☐ BASIC FEE (37 CFR 1.16(a), (b), or (c))	N/A	N/A	N/A	
☐ SEARCH FEE (37 CFR 1.16(k), (i), or (m))	N/A	N/A	N/A	
☐ EXAMINATION FEE (37 CFR 1.16(o), (p), or (q))	N/A	N/A	N/A	
TOTAL CLAIMS (37 CFR 1.16(i))	minus 20 =	*	x $ =	
INDEPENDENT CLAIMS (37 CFR 1.16(h))	minus 3 =	*	x $ =	
☐ APPLICATION SIZE FEE (37 CFR 1.16(s))	If the specification and drawings exceed 100 sheets of paper, the application size fee due is $310 ($155 for small entity) for each additional 50 sheets or fraction thereof. See 35 U.S.C. 41(a)(1)(G) and 37 CFR 1.16(s).			
☐ MULTIPLE DEPENDENT CLAIM PRESENT (37 CFR 1.16(j))				
* If the difference in column 1 is less than zero, enter "0" in column 2.			TOTAL	

APPLICATION AS AMENDED – PART II

AMENDMENT

04/16/2014	(Column 1) CLAIMS REMAINING AFTER AMENDMENT		(Column 2) HIGHEST NUMBER PREVIOUSLY PAID FOR	(Column 3) PRESENT EXTRA	RATE ($)	ADDITIONAL FEE ($)
Total (37 CFR 1.16(i))	* 20	Minus	** 20	= 0	x $80 =	0
Independent (37 CFR 1.16(h))	* 3	Minus	***3	= 0	x $420 =	0
☐ Application Size Fee (37 CFR 1.16(s))						
☐ FIRST PRESENTATION OF MULTIPLE DEPENDENT CLAIM (37 CFR 1.16(j))						
					TOTAL ADD'L FEE	0

AMENDMENT

	(Column 1) CLAIMS REMAINING AFTER AMENDMENT		(Column 2) HIGHEST NUMBER PREVIOUSLY PAID FOR	(Column 3) PRESENT EXTRA	RATE ($)	ADDITIONAL FEE ($)
Total (37 CFR 1.16(i))	*	Minus	**	=	x $ =	
Independent (37 CFR 1.16(h))	*	Minus	***	=	x $ =	
☐ Application Size Fee (37 CFR 1.16(s))						
☐ FIRST PRESENTATION OF MULTIPLE DEPENDENT CLAIM (37 CFR 1.16(j))						
					TOTAL ADD'L FEE	

* If the entry in column 1 is less than the entry in column 2, write "0" in column 3.
** If the "Highest Number Previously Paid For" IN THIS SPACE is less than 20, enter "20".
*** If the "Highest Number Previously Paid For" IN THIS SPACE is less than 3, enter "3".
The "Highest Number Previously Paid For" (Total or Independent) is the highest number found in the appropriate box in column 1.

LIE
/MARGARET BYARS/

This collection of information is required by 37 CFR 1.16. The information is required to obtain or retain a benefit by the public which is to file (and by the USPTO to process) an application. Confidentiality is governed by 35 U.S.C. 122 and 37 CFR 1.14. This collection is estimated to take 12 minutes to complete, including gathering, preparing, and submitting the completed application form to the USPTO. Time will vary depending upon the individual case. Any comments on the amount of time you require to complete this form and/or suggestions for reducing this burden, should be sent to the Chief Information Officer, U.S. Patent and Trademark Office, U.S. Department of Commerce, P.O. Box 1450, Alexandria, VA 22313-1450. DO NOT SEND FEES OR COMPLETED FORMS TO THIS ADDRESS. **SEND TO: Commissioner for Patents, P.O. Box 1450, Alexandria, VA 22313-1450.**
If you need assistance in completing the form, call 1-800-PTO-9199 and select option 2.

Application Number	Application/Control No.	Applicant(s)/Patent under Reexamination
	13/495,577	COUSINS, PETER JOHN

Document Code - DISQ	Internal Document – DO NOT MAIL

TERMINAL DISCLAIMER	☒ APPROVED	☐ DISAPPROVED
Date Filed : 4/16/14	This patent is subject to a Terminal Disclaimer	

Approved/Disapproved by:

ANDRE ROBINSON

U.S. Patent and Trademark Office

UNITED STATES PATENT AND TRADEMARK OFFICE

UNITED STATES DEPARTMENT OF COMMERCE
United States Patent and Trademark Office
Address: COMMISSIONER FOR PATENTS
P.O. Box 1450
Alexandria, Virginia 22313-1450
www.uspto.gov

APPLICATION NO.	FILING DATE	FIRST NAMED INVENTOR	ATTORNEY DOCKET NO.	CONFIRMATION NO.
13/495,577	06/13/2012	Peter John COUSINS	10031.004210	3380

74254 7590 04/24/2014
Okamoto & Benedicto LLP
P.O. Box 641330
San Jose, CA 95164-1330

EXAMINER
PILLAY, DEVINA

ART UNIT	PAPER NUMBER
1755	

MAIL DATE	DELIVERY MODE
04/24/2014	PAPER

Please find below and/or attached an Office communication concerning this application or proceeding.

The time period for reply, if any, is set in the attached communication.

Advisory Action Before the Filing of an Appeal Brief	**Application No.** *13/495,577*	**Applicant(s)** COUSINS, PETER JOHN	
	Examiner DEVINA PILLAY	**Art Unit** 1755	**AIA (First Inventor to File) Status** No

--The MAILING DATE of this communication appears on the cover sheet with the correspondence address --

THE REPLY FILED 16 April 2014 FAILS TO PLACE THIS APPLICATION IN CONDITION FOR ALLOWANCE.

NO NOTICE OF APPEAL FILED

1. ☒ The reply was filed after a final rejection. No Notice of Appeal has been filed. To avoid abandonment of this application, applicant must timely file one of the following replies: (1) an amendment, affidavit, or other evidence, which places the application in condition for allowance;

(2) a Notice of Appeal (with appeal fee) in compliance with 37 CFR 41.31; or (3) a Request for Continued Examination (RCE) in compliance with 37 CFR 1.114 if this is a utility or plant application. Note that RCEs are not permitted in design applications. The reply must be filed within one of the following time periods:

a) ☒ The period for reply expires 3 months from the mailing date of the final rejection.

b) ☐ The period for reply expires on: (1) the mailing date of this Advisory Action; or (2) the date set forth in the final rejection, whichever is later. In no event, however, will the statutory period for reply expire later than SIX MONTHS from the mailing date of the final rejection.

c) ☐ A prior Advisory Action was mailed more than 3 months after the mailing date of the final rejection in response to a first after-final reply filed within 2 months of the mailing date of the final rejection. The current period for reply expires months from the mailing date of *the prior Advisory Action* or SIX MONTHS from the mailing date of the final rejection, whichever is earlier.

Examiner Note: If box 1 is checked, check either box (a), (b) or (c). ONLY CHECK BOX (b) WHEN THIS ADVISORY ACTION IS THE FIRST RESPONSE TO APPLICANT'S FIRST AFTER-FINAL REPLY WHICH WAS FILED WITHIN TWO MONTHS OF THE FINAL REJECTION. ONLY CHECK BOX (c) IN THE LIMITED SITUATION SET FORTH UNDER BOX (c). See MPEP 706.07(f).

Extensions of time may be obtained under 37 CFR 1.136(a). The date on which the petition under 37 CFR 1.136(a) and the appropriate extension fee have been filed is the date for purposes of determining the period of extension and the corresponding amount of the fee. The appropriate extension fee under 37 CFR 1.17(a) is calculated from: (1) the expiration date of the shortened statutory period for reply originally set in the final Office action; or (2) as set forth in (b) or (c) above, if checked. Any reply received by the Office later than three months after the mailing date of the final rejection, even if timely filed, may reduce any earned patent term adjustment. See 37 CFR 1.704(b).

NOTICE OF APPEAL

2. ☐ The Notice of Appeal was filed on _____. A brief in compliance with 37 CFR 41.37 must be filed within two months of the date of filing the Notice of Appeal (37 CFR 41.37(a)), or any extension thereof (37 CFR 41.37(e)), to avoid dismissal of the appeal. Since a Notice of Appeal has been filed, any reply must be filed within the time period set forth in 37 CFR 41.37(a).

AMENDMENTS

3. ☐ The proposed amendments filed after a final rejection, but prior to the date of filing a brief, will not be entered because

a) ☐ They raise new issues that would require further consideration and/or search (see NOTE below);

b) ☐ They raise the issue of new matter (see NOTE below);

c) ☐ They are not deemed to place the application in better form for appeal by materially reducing or simplifying the issues for appeal; and/or

d) ☐ They present additional claims without canceling a corresponding number of finally rejected claims.

NOTE: _____. (See 37 CFR 1.116 and 41.33(a)).

4. ☐ The amendments are not in compliance with 37 CFR 1.121. See attached Notice of Non-Compliant Amendment (PTOL-324).

5. ☐ Applicant's reply has overcome the following rejection(s): _____.

6. ☐ Newly proposed or amended claim(s) _____ would be allowable if submitted in a separate, timely filed amendment canceling the non-allowable claim(s).

7. ☐ For purposes of appeal, the proposed amendment(s): (a) ☐ will not be entered, or (b) ☐ will be entered, and an explanation of how the new or amended claims would be rejected is provided below or appended.

AFFIDAVIT OR OTHER EVIDENCE

8. ☐ A declaration(s)/affidavit(s) under **37 CFR 1.130(b)** was/were filed on _____.

9. ☐ The affidavit or other evidence filed after final action, but before or on the date of filing a Notice of Appeal will not be entered because applicant failed to provide a showing of good and sufficient reasons why the affidavit or other evidence is necessary and was not earlier presented. See 37 CFR 1.116(e).

10. ☐ The affidavit or other evidence filed after the date of filing the Notice of Appeal, but prior to the date of filing a brief, will not be entered because the affidavit or other evidence failed to overcome all rejections under appeal and/or appellant fails to provide a showing of good and sufficient reasons why it is necessary and was not earlier presented. See 37 CFR 41.33(d)(1).

11. ☐ The affidavit or other evidence is entered. An explanation of the status of the claims after entry is below or attached.

REQUEST FOR RECONSIDERATION/OTHER

12. ☒ The request for reconsideration has been considered but does NOT place the application in condition for allowance because: See Continuation Sheet.

13. ☐ Note the attached Information *Disclosure Statement*(s). (PTO/SB/08) Paper No(s). _____

14. ☐ Other: _____.

STATUS OF CLAIMS

15. The status of the claim(s) is (or will be) as follows:

Claim(s) allowed: .

Claim(s) objected to: .

Claim(s) rejected: 9-16 and 21-32.

Claim(s) withdrawn from consideration: .

/DEVINA PILLAY/
Primary Examiner, Art Unit 1755

Continuation of 11. does NOT place the application in condition for allowance because: Applicant argues that claims 9, 21, and 28 are is patentable over the prior art because the instant claims recites diffusing P-type dopants from the P-type dopant source to the layer of polysilicon to form a backside junction with the N-type silicon substrate. Furthermore, Applicant notes that Silvestre discloses a solar cell with a polysilicon back surface field (BSF) however, does not disclose an N-type substrate. Lindholm, like Silvestre, also discloses a polysilicon BSF (Lindholm, Abstract, Table I). Lindholm discloses that a polysilicon BSF may be used on both N-type and P- type substrates. However, Lindholm does not teach or suggest that a P-type polysilicon BSF may be used with an N-type substrate or vice versa. Because a BSF needs to repel the minority carriers of the solar cell, a BSF (either in-substrate or polysilicon) necessarily has the same dopant type as the substrate.

Examiner does not agree that Lindholm and Silvestre disclose a BSF polysilicon layer. Instead they disclose simply a back polysilicon emitter layer which is different than a back surface field. In fact they explicitly disclose replacing the back surface field with the polysilicon emitter. Lindholm discloses for the cells having an n-type base, both the polysilicon devices and the BSF formed by p-diffusing showed significant and similar increases in RSR when compared with BOC controls. This indicates that the polysilicon emitter can be opposite to the base type. The emitter region on the back surface of the solar cell, of modified Silvestre is therefore oppositely doped to the solar cell substrate which would form the claimed junction.

Docket No. 10031.004210
April 16, 2014

DO NOT ENTER: /D.P./
04/22/2014

IN THE UNITED STATES PATENT AND TRADEMARK OFFICE

In re Application of:

Peter John COUSINS

Application No.: 13/495,577 Examiner: PILLAY, DEVINA

Filing Date: June 13, 2012 Art Unit: 1755

Title: FRONT CONTACT SOLAR CELL WITH FORMED EMITTER

RESPONSE TO FINAL OFFICE ACTION

INTRODUCTORY COMMENTS

This paper is responsive to the Final Office Action mailed on February 26, 2014 ("final office action").

Doc Code: AP.PRE.REQ

PTO/SB/33 (07-09)
Approved for use through 07/31/2012. OMB 0651-0031
U.S. Patent and Trademark Office; U.S. DEPARTMENT OF COMMERCE
Under the Paperwork Reduction Act of 1995, no persons are required to respond to a collection of information unless it displays a valid OMB control number.

PRE-APPEAL BRIEF REQUEST FOR REVIEW

Docket Number (Optional): 10031.004210

I hereby certify that this correspondence is being deposited with the United States Postal Service with sufficient postage as first class mail in an envelope addressed to "Mail Stop AF, Commissioner for Patents, P.O. Box 1450, Alexandria, VA 22313-1450" [37 CFR 1.8(a)]

on _____

Signature _____

Typed or printed name _____

Application Number	Filed
13/495,577	06/13/2012

First Named Inventor: Peter John COUSINS

Art Unit	Examiner
1755	PILLAY, DEVINA

Applicant requests review of the final rejection in the above-identified application. No amendments are being filed with this request.

This request is being filed with a notice of appeal.

The review is requested for the reason(s) stated on the attached sheet(s).
Note: No more than five (5) pages may be provided.

I am the

- [ ] applicant/inventor.
- [ ] assignee of record of the entire interest. See 37 CFR 3.71. Statement under 37 CFR 3.73(b) is enclosed. (Form PTO/SB/96)
- [x] attorney or agent of record. Registration number 40,909.
- [ ] attorney or agent acting under 37 CFR 1.34. Registration number if acting under 37 CFR 1.34 _____

/Patrick D. Benedicto/
Signature

PATRICK D. BENEDICTO
Typed or printed name

408.436.2110
Telephone number

May 27, 2014
Date

NOTE: Signatures of all the inventors or assignees of record of the entire interest or their representative(s) are required. Submit multiple forms if more than one signature is required, see below*.

[x] *Total of 1 forms are submitted.

This collection of information is required by 35 U.S.C. 132. The information is required to obtain or retain a benefit by the public which is to file (and by the USPTO to process) an application. Confidentiality is governed by 35 U.S.C. 122 and 37 CFR 1.11, 1.14 and 41.6. This collection is estimated to take 12 minutes to complete, including gathering, preparing, and submitting the completed application form to the USPTO. Time will vary depending upon the individual case. Any comments on the amount of time you require to complete this form and/or suggestions for reducing this burden, should be sent to the Chief Information Officer, U.S. Patent and Trademark Office, U.S. Department of Commerce, P.O. Box 1450, Alexandria, VA 22313-1450. DO NOT SEND FEES OR COMPLETED FORMS TO THIS ADDRESS. **SEND TO: Mail Stop AF, Commissioner for Patents, P.O. Box 1450, Alexandria, VA 22313-1450.**

If you need assistance in completing the form, call 1-800-PTO-9199 and select option 2.

ARGUMENTS

Claims 9-16 and 21-32 remain in the application and stand finally rejected.

Claim Rejections – 35 U.S.C. §103

Claims 9-12, 16, 21-25, and 27 are rejected under pre-AIA 35 U.S.C. §103(a) as being unpatentable over Silvestre et al., *Series Resistance in Double-Polysilicon Contacted Solar Cells* ("Silvestre"), in view of Lindholm et al., *Heavily Doped Polysilicon-Contact Solar Cells* ("Lindholm"), and further in view of US 6,998,288 to Smith et al. ("Smith"). The rejection is respectfully traversed.

Claim 9 is patentable over the combination of Silvestre, Lindholm, and Smith at least for reciting: "diffusing P-type dopants from the P-type dopant source to the layer of polysilicon to form a backside junction with the N-type silicon substrate." In the embodiment of claim 9, the layer of polysilicon forms a backside junction with the silicon substrate. It is respectfully submitted that this feature of claim 9 is not taught or suggested by the combination of Silvestre, Lindholm, and Smith.

During prosecution, pending claims are given their broadest reasonable interpretation consistent with the specification as interpreted by one of ordinary skill in the art. *In re Am. Acad. of Sci. Tech. Ctr.*, 367 F.3d 1359, 1364 (Fed. Cir. 2004). Here, claim 9 recites that the layer of polysilicon forms a backside junction with the silicon substrate. Accordingly, the layer of polysilicon is P-type when the silicon substrate is N-type. In marked contrast, Silvestre discloses a solar cell with a polysilicon back surface field (BSF). As is well known, ***a BSF has the same dopant type as the substrate*** but at a higher concentration to keep minority charge carriers away from the back surface. Accordingly, because Silvestre FIG. 1 shows a P-type BSF, Silvestre does not disclose an N-type substrate.

The final office action suggests that Lindholm discloses that the "contacts can be on both n-type or p-type solar cells" and that it would have been obvious to modify Silvestre to use an N-type substrate as disclosed by Lindholm. Appellants respectfully disagree.

First, Silvestre pertains to improving a conventional BSF cell with a polysilicon BSF (Silvestre, Results section). Therefore, it is respectfully submitted that modifying Silvestre to have a P-type polysilicon layer cannot render claim 9 *prima facie* obvious because such modification removes the BSF and accordingly changes the principle of operation of Silvestre.

Second, Lindholm, like Silvestre, also discloses a polysilicon BSF (Lindholm, Abstract, Table I). Lindholm discloses that a polysilicon BSF may be used on both N-type and P-type substrates. However, Lindholm does not teach or suggest that a P-type polysilicon BSF may be used with an N-type substrate or vice versa. Because a BSF needs to repel the minority carriers of the solar cell, a BSF (either in-substrate or polysilicon) necessarily has the same dopant type as the substrate.

Therefore, the combination of Silvestre and Lindholm teaches that a P-type polysilicon BSF must be used with a P-type substrate and an N-type polysilicon BSF must be used with an N-type substrate. In other words, Silvestre and Lindholm discloses a solar cell where the polysilicon and the substrate necessarily have the same dopant type in order to form the polysilicon BSF, which is the primary teaching of Silvestre and Lindholm. Smith does not add to the combination of Silvestre and Lindholm in this regard. In marked contrast, claim 9 recites that the polysilicon forms a backside junction with the silicon substrate, i.e., the polysilicon and the silicon substrate have different dopant types. More specifically, claim 9 recites that the P-type layer of polysilicon forms a backside junction with the N-type silicon substrate.

The Advisory Action mailed April 24, 2014 "does not agree that Lindholm and Silvestre disclose a BSF polysilicon layer." Appellants respectfully disagree. The experimental results section of Silvestre is reproduced below.

RESULTS

Systematic measurements were carried out on a number of devices in each wafer and then averaged values were computed for the total series resistance.

I(V) characteristics and series resistance measurements were made using a standard procedure, and then the results compared with a more recent method [4].

Figure 4 shows the values for the total specific series resistance for both types of devices: conventional BSF and polysilicon BSF. The results are plotted against the drive-in time of the impurities from the polysilicon to the single crystal silicon.

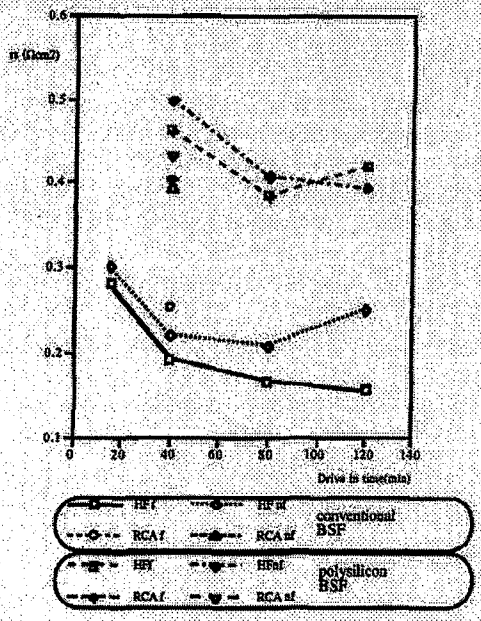

Fig.4 Total measured specific series resistance (Ωcm^2), in conventional and polysilicon BSF cells.

As noted in the results section of Silvestre reproduced above, Silvestre is comparing conventional BSF cells with ***polysilicon BSF cells***.

It is respectfully submitted that Lindholm does not add to Silvestre. Like Silvestre, Lindholm is also comparing a polysilicon BSF cell against a conventional BSF and an ohmic contact BSF. This is explicit in the results table of Lindholm.

TABLE I
SUMMARY OF MEASURED PARAMETERS AT 28°C, (NO AR COATING)

Cell	Base type	Back contact	V_{oc} (mV)	$I_{SCR}(\lambda>0.6\mu m)$ (mA)	L (μm)	S (cm/s)
1P	p	ohmic	573	63	310-350	
2P	p	BSF	574	64	310-350	$4.2x10^4$-$5x10^4$
5P	p	poly-Si BSF	583	67.7	310-350	1100-1500
1N	n	ohmic	566	62.7	190-250	
2N	n	BSF	565	65.2	190-250	700-1000
5N	n	poly-Si BSF	591	65.5	190-250	100-160

Note: The cells have area A = 4 cm² and thickness of about 210 ± 10 μm except for cell 2N which was 330 μm thick. The results are the average values from 10–20 cells.

As shown in Table 1 of Lindholm, reproduced above, Lindholm compares cells with ohmic, BSF, and ***poly-Si BSF*** (i.e., polysilicon BSF) back contact (Table 1, "Back contact" column). The first three rows of Table 1 are for a P-type substrate (1P, 2P, 5P) and the last three rows are for an N-Type substrate (1N, 2N, 5N). The columns of Table 1 from left to right show the cell type (P or N type cell), the base type (P or N), the back contact (ohmic, BSF, poly-BSF), and associated measured parameters.

Still referring to Lindholm Table 1, the measurements for the first row is for a P-type cell with a P-type base and ohmic contact, for the second row is for a P-type cell with a P-type base and BSF contact, for the third row is for a P-type cell with a P-type base and ***poly-Si BSF*** back contact, for the fourth row is for an N-type cell with an N-type base and ohmic back contact, and so on.

As is evident from the foregoing, Lindholm, like Silvestre, teaches replacing a conventional BSF with a polysilicon BSF for better performance. However, the fact remains that Lindholm teaches using a P-type cell with a P-type polysilicon BSF and an N-type cell with an N-type polysilicon BSF as per BSF design.

Therefore, it is respectfully submitted that claim 9 is patentable over the combination of Silvestre, Lindholm, and Smith.

Claim 21 is patentable over the combination of Silvestre, Lindholm, and Smith at least for reciting: "diffusing dopants from the first dopant source layer to the layer of polysilicon to form a backside junction with the silicon substrate." It is respectfully submitted that the combination of Silvestre, Lindholm, and Smith does not teach or suggest diffusing dopants to the layer of polysilicon to form a backside junction with the silicon substrate. In the combination of Silvestre, Lindholm, and Smith, the polysilicon forms a BSF with the substrate, as opposed to a backside junction with the substrate.

Claims 28-30 are rejected under pre-AIA 35 U.S.C. §103(a) as being unpatentable over Silvestre in view of Lindholm and further in view of US 5,057,439 to Swanson et al. ("Swanson"). The rejection is respectfully traversed.

Claim 28 is patentable over the combination of Silvestre, Lindholm, and Swanson at least for reciting: "diffusing dopants into the layer of polysilicon to form a backside junction with the silicon substrate." It is respectfully submitted that the combination of Silvestre, Lindholm, and Swanson does not teach or suggest diffusing dopants into the layer of polysilicon to form a backside junction with the silicon substrate. In the combination of Silvestre, Lindholm, and Swanson, the polysilicon forms a BSF with the substrate, as opposed to a backside junction with the substrate.

Claims 10-16, 22-27, and 29-31 are patentable at least for depending from patentable base claims.

PTO/SB/31 (02-14)
Approved for use through 07/31/2016. OMB 0651-0031
U.S. Patent and Trademark Office; U.S. DEPARTMENT OF COMMERCE
Under the Paperwork Reduction Act of 1995, no persons are required to respond to a collection of information unless it displays a valid OMB control number.

NOTICE OF APPEAL FROM THE EXAMINER TO THE PATENT TRIAL AND APPEAL BOARD

Docket Number (Optional): 10031.004210

I hereby certify that this correspondence is being facsimile transmitted to the USPTO EFS-Web transmitted to the USPTO, or or deposited with the United States Postal Service with sufficient postage as first class mail in an envelope addressed to "Commissioner for Patents, P.O. Box 1450, Alexandria, VA 22313-1450" [37 CFR 1.8(a)]

on _____

Signature _____

Typed or printed name _____

In re Application of: Peter John COUSINS

Application Number: 13/495,577

Filed: 06/13/2012

For: FRONT CONTACT SOLAR CELL WITH FORMED EMMITER

Art Unit: 1755

Examiner: PILLAY, DEVINA

Applicant hereby **appeals** to the Patent Trial and Appeal Board from the last decision of the examiner.

The fee for this Notice of Appeal is (37 CFR 41.20(b)(1)) $ 800

☐ Applicant claims small entity status. See 37 CFR 1.27. Therefore, the fee shown above is reduced by half, and the resulting fee is: $ _____

☐ A check in the amount of the fee is enclosed.

☑ Payment by credit card. Form PTO-2038 is attached.

☑ The Director is hereby authorized to charge any fees which may be required, or credit any overpayment to Deposit Account No. 50-2427 .

☐ A petition for an extension of time under 37 CFR 1.136(a) (PTO/SB/22) is enclosed.

WARNING: Information on this form may become public. Credit card information should not be included on this form. Provide credit card information and authorization on PTO-2038.

I am the

☐ applicant/inventor.

☐ assignee of record of the entire interest. See 37 CFR 3.71. Statement under 37 CFR 3.73(b) is enclosed. (Form PTO/SB/96)

☑ attorney or agent of record. Registration number 40,909.

☐ attorney or agent acting under 37 CFR 1.34. Registration number if acting under 37 CFR 1.34. _____

/Patrick D. Benedicto/
Signature

PATRICK D. BENEDICTO
Typed or printed name

408.436.2110
Telephone number

May 27, 2014
Date

NOTE: Signatures of all the inventors or assignees of record of the entire interest or their representative(s) are required. Submit multiple forms if more than one signature is required, see below*.

☑ *Total of 1 forms are submitted.

This collection of information is required by 37 CFR 41.31. The information is required to obtain or retain a benefit by the public which is to file (and by the USPTO to process) an application. Confidentiality is governed by 35 U.S.C. 122 and 37 CFR 1.11, 1.14 and 41.6. This collection is estimated to take 12 minutes to complete, including gathering, preparing, and submitting the completed application form to the USPTO. Time will vary depending upon the individual case. Any comments on the amount of time you require to complete this form and/or suggestions for reducing this burden, should be sent to the Chief Information Officer, U.S. Patent and Trademark Office, U.S. Department of Commerce, P.O. Box 1450, Alexandria, VA 22313-1450. DO NOT SEND FEES OR COMPLETED FORMS TO THIS ADDRESS. **SEND TO: Commissioner for Patents, P.O. Box 1450, Alexandria, VA 22313-1450.**

If you need assistance in completing the form, call 1-800-PTO-9199 and select option 2.

Electronic Patent Application Fee Transmittal

Application Number:	13495577
Filing Date:	13-Jun-2012
Title of Invention:	FRONT CONTACT SOLAR CELL WITH FORMED EMITTER
First Named Inventor/Applicant Name:	Peter John COUSINS
Filer:	Patrick D. Benedicto/jina mangaoang
Attorney Docket Number:	10031.004210

Filed as Large Entity

Utility under 35 USC 111(a) Filing Fees

Description	Fee Code	Quantity	Amount	Sub-Total in USD($)
Basic Filing:				
Pages:				
Claims:				
Miscellaneous-Filing:				
Petition:				
Patent-Appeals-and-Interference:				
Notice of Appeal	1401	1	800	800
Post-Allowance-and-Post-Issuance:				
Extension-of-Time:				

Description	Fee Code	Quantity	Amount	Sub-Total in USD($)
Miscellaneous:				
			Total in USD ($)	**800**

Electronic Acknowledgement Receipt

EFS ID:	19128727
Application Number:	13495577
International Application Number:	
Confirmation Number:	3380
Title of Invention:	FRONT CONTACT SOLAR CELL WITH FORMED EMITTER
First Named Inventor/Applicant Name:	Peter John COUSINS
Customer Number:	74254
Filer:	Patrick D. Benedicto/jina mangaoang
Filer Authorized By:	Patrick D. Benedicto
Attorney Docket Number:	10031.004210
Receipt Date:	27-MAY-2014
Filing Date:	13-JUN-2012
Time Stamp:	16:53:47
Application Type:	Utility under 35 USC 111(a)

Payment information:

Submitted with Payment	yes
Payment Type	Credit Card
Payment was successfully received in RAM	$800
RAM confirmation Number	4421
Deposit Account	
Authorized User	

File Listing:

Document Number	Document Description	File Name	File Size(Bytes)/ Message Digest	Multi Part /.zip	Pages (if appl.)

1		S0123US1_Pre-AppealBrief_and_NoticeOfAppeal.pdf	720346 d7a7138deb55f36fb7482b3db6d1551ad47c3c80	yes	7
	Multipart Description/PDF files in .zip description				
	Document Description		**Start**	**End**	
	Pre-Brief Conference request		1	6	
	Notice of Appeal Filed		7	7	
Warnings:					
Information:					
2	Fee Worksheet (SB06)	fee-info.pdf	30465 ba14e770d26fcd5b04a75bfc876426e10bed5eaa	no	2
Warnings:					
Information:					
		Total Files Size (in bytes):	750811		

This Acknowledgement Receipt evidences receipt on the noted date by the USPTO of the indicated documents, characterized by the applicant, and including page counts, where applicable. It serves as evidence of receipt similar to a Post Card, as described in MPEP 503.

<u>New Applications Under 35 U.S.C. 111</u>
If a new application is being filed and the application includes the necessary components for a filing date (see 37 CFR 1.53(b)-(d) and MPEP 506), a Filing Receipt (37 CFR 1.54) will be issued in due course and the date shown on this Acknowledgement Receipt will establish the filing date of the application.

<u>National Stage of an International Application under 35 U.S.C. 371</u>
If a timely submission to enter the national stage of an international application is compliant with the conditions of 35 U.S.C. 371 and other applicable requirements a Form PCT/DO/EO/903 indicating acceptance of the application as a national stage submission under 35 U.S.C. 371 will be issued in addition to the Filing Receipt, in due course.

<u>New International Application Filed with the USPTO as a Receiving Office</u>
If a new international application is being filed and the international application includes the necessary components for an international filing date (see PCT Article 11 and MPEP 1810), a Notification of the International Application Number and of the International Filing Date (Form PCT/RO/105) will be issued in due course, subject to prescriptions concerning national security, and the date shown on this Acknowledgement Receipt will establish the international filing date of the application.

UNITED STATES PATENT AND TRADEMARK OFFICE

UNITED STATES DEPARTMENT OF COMMERCE
United States Patent and Trademark Office
Address: COMMISSIONER FOR PATENTS
P.O. Box 1450
Alexandria, Virginia 22313-1450
www.uspto.gov

APPLICATION NO.	FILING DATE	FIRST NAMED INVENTOR	ATTORNEY DOCKET NO.	CONFIRMATION NO.
13/495,577	06/13/2012	Peter John COUSINS	10031.004210	3380

74254 7590 06/11/2014
Okamoto & Benedicto LLP
P.O. Box 641330
San Jose, CA 95164-1330

EXAMINER
PILLAY, DEVINA

ART UNIT	PAPER NUMBER
1755	

MAIL DATE	DELIVERY MODE
06/11/2014	PAPER

Please find below and/or attached an Office communication concerning this application or proceeding.

The time period for reply, if any, is set in the attached communication.

Notice of Panel Decision from Pre-Appeal Brief Review	Application No. 13/495,577	Applicant(s) COUSINS, PETER JOHN
	Examiner DEVINA PILLAY	Art Unit 1755

This is in response to the Pre-Appeal Brief Request for Review filed 27 May, 2014.

1. ☐ **Improper Request** – The Request is improper and a conference will not be held for the following reason(s):

☐ The Notice of Appeal has not been filed concurrent with the Pre-Appeal Brief Request.
☐ The request does not include reasons why a review is appropriate.
☐ A proposed amendment is included with the Pre-Appeal Brief request.
☐ Other: .

The time period for filing a response continues to run from the receipt date of the Notice of Appeal or from the mail date of the last Office communication, if no Notice of Appeal has been received.

2. ☐ **Proceed to Board of Patent Appeals and Interferences** – A Pre-Appeal Brief conference has been held. The application remains under appeal because there is at least one actual issue for appeal. Applicant is required to submit an appeal brief in accordance with 37 CFR 41.37. The time period for filing an appeal brief will be reset to be one month from mailing this decision, or the balance of the two-month time period running from the receipt of the notice of appeal, whichever is greater. Further, the time period for filing of the appeal brief is extendible under 37 CFR 1.136 based upon the mail date of this decision or the receipt date of the notice of appeal, as applicable.

☐ The panel has determined the status of the claim(s) is as follows:
Claim(s) allowed: _____.
Claim(s) objected to: _____.
Claim(s) rejected: _____.
Claim(s) withdrawn from consideration: _____.

3. ☒ **Allowable application** – A conference has been held. The rejection is withdrawn and a Notice of Allowance will be mailed. Prosecution on the merits remains closed. No further action is required by applicant at this time.

4. ☐ **Reopen Prosecution** – A conference has been held. The rejection is withdrawn and a new Office action will be mailed. No further action is required by applicant at this time.

All participants:

(1) *DEVINA PILLAY*.	(3)*LUAN VAN*.
(2) *DIANA DUDASH*.	(4)_____.

/DEVINA PILLAY/ Primary Examiner, Art Unit 1755	/DIANA DUDASH/ Primary Examiner	/LUAN VAN/ Supervisory Patent Examiner, Art Unit 1759

UNITED STATES PATENT AND TRADEMARK OFFICE

UNITED STATES DEPARTMENT OF COMMERCE
United States Patent and Trademark Office
Address: COMMISSIONER FOR PATENTS
P.O. Box 1450
Alexandria, Virginia 22313-1450
www.uspto.gov

NOTICE OF ALLOWANCE AND FEE(S) DUE

74254 7590 07/07/2014
Okamoto & Benedicto LLP
P.O. Box 641330
San Jose, CA 95164-1330

EXAMINER
PILLAY, DEVINA

ART UNIT	PAPER NUMBER
1755	

DATE MAILED: 07/07/2014

APPLICATION NO.	FILING DATE	FIRST NAMED INVENTOR	ATTORNEY DOCKET NO.	CONFIRMATION NO.
13/495,577	06/13/2012	Peter John COUSINS	10031.004210	3380

TITLE OF INVENTION: FRONT CONTACT SOLAR CELL WITH FORMED EMITTER

APPLN. TYPE	ENTITY STATUS	ISSUE FEE DUE	PUBLICATION FEE DUE	PREV. PAID ISSUE FEE	TOTAL FEE(S) DUE	DATE DUE
nonprovisional	UNDISCOUNTED	$960	$0	$0	$960	10/07/2014

THE APPLICATION IDENTIFIED ABOVE HAS BEEN EXAMINED AND IS ALLOWED FOR ISSUANCE AS A PATENT. PROSECUTION ON THE MERITS IS CLOSED. THIS NOTICE OF ALLOWANCE IS NOT A GRANT OF PATENT RIGHTS. THIS APPLICATION IS SUBJECT TO WITHDRAWAL FROM ISSUE AT THE INITIATIVE OF THE OFFICE OR UPON PETITION BY THE APPLICANT. SEE 37 CFR 1.313 AND MPEP 1308.

THE ISSUE FEE AND PUBLICATION FEE (IF REQUIRED) MUST BE PAID WITHIN THREE MONTHS FROM THE MAILING DATE OF THIS NOTICE OR THIS APPLICATION SHALL BE REGARDED AS ABANDONED. THIS STATUTORY PERIOD CANNOT BE EXTENDED. SEE 35 U.S.C. 151. THE ISSUE FEE DUE INDICATED ABOVE DOES NOT REFLECT A CREDIT FOR ANY PREVIOUSLY PAID ISSUE FEE IN THIS APPLICATION. IF AN ISSUE FEE HAS PREVIOUSLY BEEN PAID IN THIS APPLICATION (AS SHOWN ABOVE), THE RETURN OF PART B OF THIS FORM WILL BE CONSIDERED A REQUEST TO REAPPLY THE PREVIOUSLY PAID ISSUE FEE TOWARD THE ISSUE FEE NOW DUE.

HOW TO REPLY TO THIS NOTICE:

I. Review the ENTITY STATUS shown above. If the ENTITY STATUS is shown as SMALL or MICRO, verify whether entitlement to that entity status still applies.

If the ENTITY STATUS is the same as shown above, pay the TOTAL FEE(S) DUE shown above.

If the ENTITY STATUS is changed from that shown above, on PART B - FEE(S) TRANSMITTAL, complete section number 5 titled "Change in Entity Status (from status indicated above)".

For purposes of this notice, small entity fees are 1/2 the amount of undiscounted fees, and micro entity fees are 1/2 the amount of small entity fees.

II. PART B - FEE(S) TRANSMITTAL, or its equivalent, must be completed and returned to the United States Patent and Trademark Office (USPTO) with your ISSUE FEE and PUBLICATION FEE (if required). If you are charging the fee(s) to your deposit account, section "4b" of Part B - Fee(s) Transmittal should be completed and an extra copy of the form should be submitted. If an equivalent of Part B is filed, a request to reapply a previously paid issue fee must be clearly made, and delays in processing may occur due to the difficulty in recognizing the paper as an equivalent of Part B.

III. All communications regarding this application must give the application number. Please direct all communications prior to issuance to Mail Stop ISSUE FEE unless advised to the contrary.

IMPORTANT REMINDER: Utility patents issuing on applications filed on or after Dec. 12, 1980 may require payment of maintenance fees. It is patentee's responsibility to ensure timely payment of maintenance fees when due.

PART B - FEE(S) TRANSMITTAL

Complete and send this form, together with applicable fee(s), to: Mail **Mail Stop ISSUE FEE**
Commissioner for Patents
P.O. Box 1450
Alexandria, Virginia 22313-1450
or Fax (571)-273-2885

INSTRUCTIONS: This form should be used for transmitting the ISSUE FEE and PUBLICATION FEE (if required). Blocks 1 through 5 should be completed where appropriate. All further correspondence including the Patent, advance orders and notification of maintenance fees will be mailed to the current correspondence address as indicated unless corrected below or directed otherwise in Block 1, by (a) specifying a new correspondence address; and/or (b) indicating a separate "FEE ADDRESS" for maintenance fee notifications.

CURRENT CORRESPONDENCE ADDRESS (Note: Use Block 1 for any change of address)

74254 7590 07/07/2014
Okamoto & Benedicto LLP
P.O. Box 641330
San Jose, CA 95164-1330

Note: A certificate of mailing can only be used for domestic mailings of the Fee(s) Transmittal. This certificate cannot be used for any other accompanying papers. Each additional paper, such as an assignment or formal drawing, must have its own certificate of mailing or transmission.

Certificate of Mailing or Transmission
I hereby certify that this Fee(s) Transmittal is being deposited with the United States Postal Service with sufficient postage for first class mail in an envelope addressed to the Mail Stop ISSUE FEE address above, or being facsimile transmitted to the USPTO (571) 273-2885, on the date indicated below.

(Depositor's name)
(Signature)
(Date)

APPLICATION NO.	FILING DATE	FIRST NAMED INVENTOR	ATTORNEY DOCKET NO.	CONFIRMATION NO.
13/495,577	06/13/2012	Peter John COUSINS	10031.004210	3380

TITLE OF INVENTION: FRONT CONTACT SOLAR CELL WITH FORMED EMITTER

APPLN. TYPE	ENTITY STATUS	ISSUE FEE DUE	PUBLICATION FEE DUE	PREV. PAID ISSUE FEE	TOTAL FEE(S) DUE	DATE DUE
nonprovisional	UNDISCOUNTED	$960	$0	$0	$960	10/07/2014

EXAMINER	ART UNIT	CLASS-SUBCLASS
PILLAY, DEVINA	1755	136-256000

1. Change of correspondence address or indication of "Fee Address" (37 CFR 1.363).
❑ Change of correspondence address (or Change of Correspondence Address form PTO/SB/122) attached.
❑ "Fee Address" indication (or "Fee Address" Indication form PTO/SB/47; Rev 03-02 or more recent) attached. **Use of a Customer Number is required.**

2. For printing on the patent front page, list
(1) The names of up to 3 registered patent attorneys or agents OR, alternatively,
(2) The name of a single firm (having as a member a registered attorney or agent) and the names of up to 2 registered patent attorneys or agents. If no name is listed, no name will be printed.
1_____
2_____
3_____

3. ASSIGNEE NAME AND RESIDENCE DATA TO BE PRINTED ON THE PATENT (print or type)
PLEASE NOTE: Unless an assignee is identified below, no assignee data will appear on the patent. If an assignee is identified below, the document has been filed for recordation as set forth in 37 CFR 3.11. Completion of this form is NOT a substitute for filing an assignment.
(A) NAME OF ASSIGNEE (B) RESIDENCE: (CITY and STATE OR COUNTRY)

Please check the appropriate assignee category or categories (will not be printed on the patent) : ❑ Individual ❑ Corporation or other private group entity ❑ Government

4a. The following fee(s) are submitted:
❑ Issue Fee
❑ Publication Fee (No small entity discount permitted)
❑ Advance Order - # of Copies _____

4b. Payment of Fee(s): **(Please first reapply any previously paid issue fee shown above)**
❑ A check is enclosed.
❑ Payment by credit card. Form PTO-2038 is attached.
❑ The Director is hereby authorized to charge the required fee(s), any deficiency, or credits any overpayment, to Deposit Account Number _____ (enclose an extra copy of this form).

5. **Change in Entity Status** (from status indicated above)
❑ Applicant certifying micro entity status. See 37 CFR 1.29 — NOTE: Absent a valid certification of Micro Entity Status (see forms PTO/SB/15A and 15B), issue fee payment in the micro entity amount will not be accepted at the risk of application abandonment.
❑ Applicant asserting small entity status. See 37 CFR 1.27 — NOTE: If the application was previously under micro entity status, checking this box will be taken to be a notification of loss of entitlement to micro entity status.
❑ Applicant changing to regular undiscounted fee status. — NOTE: Checking this box will be taken to be a notification of loss of entitlement to small or micro entity status, as applicable.

NOTE: This form must be signed in accordance with 37 CFR 1.31 and 1.33. See 37 CFR 1.4 for signature requirements and certifications.

Authorized Signature _____ Date _____

Typed or printed name _____ Registration No. _____

UNITED STATES PATENT AND TRADEMARK OFFICE

UNITED STATES DEPARTMENT OF COMMERCE
United States Patent and Trademark Office
Address: COMMISSIONER FOR PATENTS
P.O. Box 1450
Alexandria, Virginia 22313-1450
www.uspto.gov

APPLICATION NO.	FILING DATE	FIRST NAMED INVENTOR	ATTORNEY DOCKET NO.	CONFIRMATION NO.
13/495,577	06/13/2012	Peter John COUSINS	10031.004210	3380

74254 7590 07/07/2014
Okamoto & Benedicto LLP
P.O. Box 641330
San Jose, CA 95164-1330

EXAMINER
PILLAY, DEVINA

ART UNIT	PAPER NUMBER
1755	

DATE MAILED: 07/07/2014

Determination of Patent Term Adjustment under 35 U.S.C. 154 (b)
(Applications filed on or after May 29, 2000)

The Office has discontinued providing a Patent Term Adjustment (PTA) calculation with the Notice of Allowance.

Section 1(h)(2) of the AIA Technical Corrections Act amended 35 U.S.C. 154(b)(3)(B)(i) to eliminate the requirement that the Office provide a patent term adjustment determination with the notice of allowance. See Revisions to Patent Term Adjustment, 78 Fed. Reg. 19416, 19417 (Apr. 1, 2013). Therefore, the Office is no longer providing an initial patent term adjustment determination with the notice of allowance. The Office will continue to provide a patent term adjustment determination with the Issue Notification Letter that is mailed to applicant approximately three weeks prior to the issue date of the patent, and will include the patent term adjustment on the patent. Any request for reconsideration of the patent term adjustment determination (or reinstatement of patent term adjustment) should follow the process outlined in 37 CFR 1.705.

Any questions regarding the Patent Term Extension or Adjustment determination should be directed to the Office of Patent Legal Administration at (571)-272-7702. Questions relating to issue and publication fee payments should be directed to the Customer Service Center of the Office of Patent Publication at 1-(888)-786-0101 or (571)-272-4200.

OMB Clearance and PRA Burden Statement for PTOL-85 Part B

The Paperwork Reduction Act (PRA) of 1995 requires Federal agencies to obtain Office of Management and Budget approval before requesting most types of information from the public. When OMB approves an agency request to collect information from the public, OMB (i) provides a valid OMB Control Number and expiration date for the agency to display on the instrument that will be used to collect the information and (ii) requires the agency to inform the public about the OMB Control Number's legal significance in accordance with 5 CFR 1320.5(b).

The information collected by PTOL-85 Part B is required by 37 CFR 1.311. The information is required to obtain or retain a benefit by the public which is to file (and by the USPTO to process) an application. Confidentiality is governed by 35 U.S.C. 122 and 37 CFR 1.14. This collection is estimated to take 12 minutes to complete, including gathering, preparing, and submitting the completed application form to the USPTO. Time will vary depending upon the individual case. Any comments on the amount of time you require to complete this form and/or suggestions for reducing this burden, should be sent to the Chief Information Officer, U.S. Patent and Trademark Office, U.S. Department of Commerce, P.O. Box 1450, Alexandria, Virginia 22313-1450. DO NOT SEND FEES OR COMPLETED FORMS TO THIS ADDRESS. SEND TO: Commissioner for Patents, P.O. Box 1450, Alexandria, Virginia 22313-1450. Under the Paperwork Reduction Act of 1995, no persons are required to respond to a collection of information unless it displays a valid OMB control number.

Privacy Act Statement

The Privacy Act of 1974 (P.L. 93-579) requires that you be given certain information in connection with your submission of the attached form related to a patent application or patent. Accordingly, pursuant to the requirements of the Act, please be advised that: (1) the general authority for the collection of this information is 35 U.S.C. 2(b)(2); (2) furnishing of the information solicited is voluntary; and (3) the principal purpose for which the information is used by the U.S. Patent and Trademark Office is to process and/or examine your submission related to a patent application or patent. If you do not furnish the requested information, the U.S. Patent and Trademark Office may not be able to process and/or examine your submission, which may result in termination of proceedings or abandonment of the application or expiration of the patent.

The information provided by you in this form will be subject to the following routine uses:

1. The information on this form will be treated confidentially to the extent allowed under the Freedom of Information Act (5 U.S.C. 552) and the Privacy Act (5 U.S.C 552a). Records from this system of records may be disclosed to the Department of Justice to determine whether disclosure of these records is required by the Freedom of Information Act.
2. A record from this system of records may be disclosed, as a routine use, in the course of presenting evidence to a court, magistrate, or administrative tribunal, including disclosures to opposing counsel in the course of settlement negotiations.
3. A record in this system of records may be disclosed, as a routine use, to a Member of Congress submitting a request involving an individual, to whom the record pertains, when the individual has requested assistance from the Member with respect to the subject matter of the record.
4. A record in this system of records may be disclosed, as a routine use, to a contractor of the Agency having need for the information in order to perform a contract. Recipients of information shall be required to comply with the requirements of the Privacy Act of 1974, as amended, pursuant to 5 U.S.C. 552a(m).
5. A record related to an International Application filed under the Patent Cooperation Treaty in this system of records may be disclosed, as a routine use, to the International Bureau of the World Intellectual Property Organization, pursuant to the Patent Cooperation Treaty.
6. A record in this system of records may be disclosed, as a routine use, to another federal agency for purposes of National Security review (35 U.S.C. 181) and for review pursuant to the Atomic Energy Act (42 U.S.C. 218(c)).
7. A record from this system of records may be disclosed, as a routine use, to the Administrator, General Services, or his/her designee, during an inspection of records conducted by GSA as part of that agency's responsibility to recommend improvements in records management practices and programs, under authority of 44 U.S.C. 2904 and 2906. Such disclosure shall be made in accordance with the GSA regulations governing inspection of records for this purpose, and any other relevant (i.e., GSA or Commerce) directive. Such disclosure shall not be used to make determinations about individuals.
8. A record from this system of records may be disclosed, as a routine use, to the public after either publication of the application pursuant to 35 U.S.C. 122(b) or issuance of a patent pursuant to 35 U.S.C. 151. Further, a record may be disclosed, subject to the limitations of 37 CFR 1.14, as a routine use, to the public if the record was filed in an application which became abandoned or in which the proceedings were terminated and which application is referenced by either a published application, an application open to public inspection or an issued patent.
9. A record from this system of records may be disclosed, as a routine use, to a Federal, State, or local law enforcement agency, if the USPTO becomes aware of a violation or potential violation of law or regulation.

Notice of Allowability	Application No. 13/495,577	Applicant(s) COUSINS, PETER JOHN	
	Examiner DEVINA PILLAY	Art Unit 1755	AIA (First Inventor to File) Status No

-- The MAILING DATE of this communication appears on the cover sheet with the correspondence address--

All claims being allowable, PROSECUTION ON THE MERITS IS (OR REMAINS) CLOSED in this application. If not included herewith (or previously mailed), a Notice of Allowance (PTOL-85) or other appropriate communication will be mailed in due course. **THIS NOTICE OF ALLOWABILITY IS NOT A GRANT OF PATENT RIGHTS.** This application is subject to withdrawal from issue at the initiative of the Office or upon petition by the applicant. See 37 CFR 1.313 and MPEP 1308.

1. ☒ This communication is responsive to *05/27/2014*.
   ☐ A declaration(s)/affidavit(s) under **37 CFR 1.130(b)** was/were filed on_____.
2. ☐ An election was made by the applicant in response to a restriction requirement set forth during the interview on _____; the restriction requirement and election have been incorporated into this action.
3. ☒ The allowed claim(s) is/are *9-16 and 21-32*. As a result of the allowed claim(s), you may be eligible to benefit from the **Patent Prosecution Highway** program at a participating intellectual property office for the corresponding application. For more information, please see http://www.uspto.gov/patents/init_events/pph/index.jsp or send an inquiry to PPHfeedback@uspto.gov .
4. ☐ Acknowledgment is made of a claim for foreign priority under 35 U.S.C. § 119(a)-(d) or (f).

   Certified copies:

   a) ☐ All b) ☐ Some *c) ☐ None of the:
   1. ☐ Certified copies of the priority documents have been received.
   2. ☐ Certified copies of the priority documents have been received in Application No. _____ .
   3. ☐ Copies of the certified copies of the priority documents have been received in this national stage application from the International Bureau (PCT Rule 17.2(a)).

   * Certified copies not received: _____.

Applicant has THREE MONTHS FROM THE "MAILING DATE" of this communication to file a reply complying with the requirements noted below. Failure to timely comply will result in ABANDONMENT of this application.
THIS THREE-MONTH PERIOD IS NOT EXTENDABLE.

5. ☐ CORRECTED DRAWINGS (as "replacement sheets") must be submitted.
   ☐ including changes required by the attached Examiner's Amendment / Comment or in the Office action of Paper No./Mail Date _____.

   Identifying indicia such as the application number (see 37 CFR 1.84(c)) should be written on the drawings in the front (not the back) of each sheet. Replacement sheet(s) should be labeled as such in the header according to 37 CFR 1.121(d).
6. ☐ DEPOSIT OF and/or INFORMATION about the deposit of BIOLOGICAL MATERIAL must be submitted. Note the attached Examiner's comment regarding REQUIREMENT FOR THE DEPOSIT OF BIOLOGICAL MATERIAL.

Attachment(s)

1. ☐ Notice of References Cited (PTO-892)
2. ☐ Information Disclosure Statements (PTO/SB/08), Paper No./Mail Date _____
3. ☐ Examiner's Comment Regarding Requirement for Deposit of Biological Material
4. ☐ Interview Summary (PTO-413), Paper No./Mail Date _____ .
5. ☐ Examiner's Amendment/Comment
6. ☒ Examiner's Statement of Reasons for Allowance
7. ☐ Other _____.

1. The present application is being examined under the pre-AIA first to invent provisions.

REASONS FOR ALLOWANCE

2. The following is an examiner's statement of reasons for allowance: The prior art of record lacks the instantly claimed backside junction formed at the interface of a first material of a silicon substrate comprising one dopant type and a second material of a polysilicon layer of an opposite dopant type. Furthermore the backside junction is formed on the backside of the solar cell which is opposite to the light incident front side of the solar cell. Silvestre is the closest prior art, but no fair reason or motivation to modify the solar cell of Silvestre to include the backside junction as claimed. Therefore the instant invention as claimed is considered patentable over the prior art.

Conclusion

3. Any comments considered necessary by applicant must be submitted no later than the payment of the issue fee and, to avoid processing delays, should preferably accompany the issue fee. Such submissions should be clearly labeled "Comments on Statement of Reasons for Allowance."

Any inquiry concerning this communication or earlier communications from the examiner should be directed to DEVINA PILLAY whose telephone number is (571)270-1180. The examiner can normally be reached on Monday thru Friday 7:30am -5:00pm (EST). Examiner Fax Number is (571)-270-2180.

If attempts to reach the examiner by telephone are unsuccessful, the examiner's supervisor, Jonathan J. Johnson can be reached on 571-272-1177. The fax phone

number for the organization where this application or proceeding is assigned is 571-273-8300.

Information regarding the status of an application may be obtained from the Patent Application Information Retrieval (PAIR) system. Status information for published applications may be obtained from either Private PAIR or Public PAIR. Status information for unpublished applications is available through Private PAIR only. For more information about the PAIR system, see http://pair-direct.uspto.gov. Should you have questions on access to the Private PAIR system, contact the Electronic Business Center (EBC) at 866-217-9197 (toll-free). If you would like assistance from a USPTO Customer Service Representative or access to the automated information system, call 800-786-9199 (IN USA OR CANADA) or 571-272-1000.

/DEVINA PILLAY/
Primary Examiner, Art Unit 1755

EAST Search History

EAST Search History (Prior Art)

Ref #	Hits	Search Query	DBs	Default Operator	Plurals	Time Stamp
L29	20	23 and polysilicon	US-PGPUB; USPAT; USOCR; FPRS; EPO; JPO; DERWENT; IBM_TDB	OR	ON	2014/06/10 10:54
L23	53	(US-20050268963-$ or US-20020153039-$ or US-20060196535-$ or US-20090101199-$ or US-20040097062-$ or US-20040112426-$ or US-20070186970-$ or US-20050272175-$ or US-20040063326-$ or US-20100224238-$ or US-20100000597-$ or US-20070256728-$ or US-20060060238-$ or US-20080092944-$ or US-20110162706-$ or US-20070151598-$ or US-20080092951-$ or US-20110104618-$ or US-20080223446-$).did. or (US-4379944-$ or US-4665277-$ or US-5320684-$ or US-6210991-$ or US-5792280-$ or US-5899704-$ or US-6262359-$ or US-5258077-$ or US-6071753-$ or US-7468485-$ or US-7838400-$ or US-5641362-$ or US-8222516-$ or US-3961997-$ or US-5057439-$ or US-8207443-$ or US-5138256-$ or US-7633006-$ or US-6130380-$ or US-5738731-$ or US-4927770-$ or US-6624049-$ or US-4152824-$ or US-6214743-$ or US-7029943-$ or US-6998288-$).did. or (WO-2009094578-$).did. or (US-20090205712-$ or US-20080121279-$ or WO-2007130188-$ or US-7468485-$ or JP-07106611-$ or US-20040200520-$ or JP-2004247364-$).did.	US-PGPUB; USPAT; EPO; DERWENT	OR	ON	2014/06/10 10:54
L30	4	"13495577"	US-PGPUB; USPAT; USOCR; FPRS; EPO; JPO; DERWENT; IBM_TDB	OR	ON	2014/06/10 10:58
L32	0	(H01L31/0745.cpc)	US-PGPUB; USPAT; USOCR; FPRS; EPO; JPO; DERWENT; IBM_TDB	OR	ON	2014/06/10 11:01
L31	0	(H01L31/0745.cpc) and (polysilicon	US-PGPUB;	OR	ON	2014/06/10

		polycrystalline)	USPAT; USOCR; FPRS; EPO; JPO; DERWENT; IBM_TDB			11:01
L36	1	(H01L31/0745.cpc.) and (polysilicon polycrystalline near silicon) and (back44 rear$4) near5 junction	US-PGPUB; USPAT; USOCR; FPRS; EPO; JPO; DERWENT; IBM_TDB	OR	ON	2014/06/10 11:02
L35	127	(H01L31/0745.cpc.) and (polysilicon polycrystalline near silicon)	US-PGPUB; USPAT; USOCR; FPRS; EPO; JPO; DERWENT; IBM_TDB	OR	ON	2014/06/10 11:02
L34	169	(H01L31/0745.cpc.) and (polysilicon polycrystalline)	US-PGPUB; USPAT; USOCR; FPRS; EPO; JPO; DERWENT; IBM_TDB	OR	ON	2014/06/10 11:02
L33	539	(H01L31/0745.cpc.)	US-PGPUB; USPAT; USOCR; FPRS; EPO; JPO; DERWENT; IBM_TDB	OR	ON	2014/06/10 11:02
L37	18	(H01L31/0745.cpc.) and (polysilicon polycrystalline near silicon) and (back$4 rear$4) near5 junction	US-PGPUB; USPAT; USOCR; FPRS; EPO; JPO; DERWENT; IBM_TDB	OR	ON	2014/06/10 11:03
L41	157	40 not 37	US-PGPUB; USPAT; USOCR; FPRS; EPO; JPO; DERWENT; IBM_TDB	OR	ON	2014/06/10 11:05
L40	175	(H01L31/0745.cpc. H01L31/1804.cpc. H01L31/0236.cpc. and (Y02E10/52.cpc. Y02E/547.cpc.)) and (polysilicon polycrystalline near silicon) and (back$4 rear$4) near5 junction	US-PGPUB; USPAT; USOCR; FPRS; EPO; JPO; DERWENT; IBM_TDB	OR	ON	2014/06/10 11:05
L39	9787	(H01L31/0745.cpc. H01L31/1804.cpc. H01L31/0236.cpc. and (Y02E10/52.cpc. Y02E/547.cpc.))	US-PGPUB; USPAT; USOCR; FPRS; EPO; JPO; DERWENT;	OR	ON	2014/06/10 11:05

			IBM_TDB			
L38	30183	(H01L31/0745.cpc. H01L31/1804.cpc. H01L31/0236.cpc. Y02E10/52.cpc. Y02E/547.cpc.)	US-PGPUB; USPAT; USOCR; FPRS; EPO; JPO; DERWENT; IBM_TDB	OR	ON	2014/06/10 11:05
L42	3	"12070742"	US-PGPUB; USPAT; USOCR; FPRS; EPO; JPO; DERWENT; IBM_TDB	OR	ON	2014/06/10 11:11
L43	19872	136/255.ccls. 136/256.ccls. 136/258.ccls. 438/57.ccls. 438/69.ccls. 439/72.ccls. 438/97.ccls. 438/98.ccls. 257/436.ccls. 257/461.ccls.	US-PGPUB; USPAT; USOCR; FPRS; EPO; JPO; DERWENT; IBM_TDB	OR	ON	2014/06/10 11:24
L44	4	43 and (silicon near substrate and polysilicon and ((rear$5 back$5) near2 junction)).clm.	US-PGPUB; USPAT; USOCR; FPRS; EPO; JPO; DERWENT; IBM_TDB	OR	ON	2014/06/10 11:25

6/10/2014 11:27:19 AM
C:\Users\dpillay\Documents\EAST\Workspaces\13495577.wsp

Search Notes	Application/Control No.	Applicant(s)/Patent Under Reexamination
	13495577	COUSINS, PETER JOHN
	Examiner	**Art Unit**
	DEVINA PILLAY	1755

CPC- SEARCHED

Symbol	Date	Examiner
H01L31/0745 H01L31/1804 H01L31/0236	06/10/2014	DP
Y02E10/547 Y02E10/52	06/10/2014	DP

CPC COMBINATION SETS - SEARCHED

Symbol	Date	Examiner

US CLASSIFICATION SEARCHED

Class	Subclass	Date	Examiner
136	261	02/11/2014	DP
136	255 256 258	06/10/2014	DP
438	57 69 72 97 98	06/10/2014	DP
257	436 461	06/10/2014	DP

SEARCH NOTES

Search Notes	Date	Examiner
EAST Text Search (See Search History)	02/11/2014	DP
Inventor name search in PALM	02/11/2014	DP
Updated EAST Text Search (See Search History)	06/10/2014	DP

INTERFERENCE SEARCH

US Class/ CPC Symbol	US Subclass / CPC Group	Date	Examiner
	H01L31/0745 H01L31/1804 H01L31/0236	06/10/2014	DP
	Y02E10/542 Y02E10/52	06/10/2014	DP
136	255 256 258	06/10/2014	DP
438	57 69 72 97 98	06/10/2014	DP
257	436 461	06/10/2014	DP

Issue Classification	Application/Control No.	Applicant(s)/Patent Under Reexamination
	13495577	COUSINS, PETER JOHN
	Examiner	**Art Unit**
	DEVINA PILLAY	1755

CPC						
Symbol					**Type**	**Version**
H01L		31	/	1804	F	2013-01-01
H01L		31	/	0236	I	2013-01-01
Y02E		10	/	547	A	2013-01-01
Y02E		10	/	52	A	2013-01-01
H01L		31	/	0745	I	2013-01-01
			/			
			/			
			/			
			/			
			/			
			/			
			/			
			/			
			/			
			/			

CPC Combination Sets								
Symbol					**Type**	**Set**	**Ranking**	**Version**
			/					
			/					

NONE (Assistant Examiner)	(Date)	**Total Claims Allowed:** 20	
/DEVINA PILLAY/ Primary Examiner.Art Unit 1755 (Primary Examiner)	06/10/2014 (Date)	O.G. Print Claim(s) 9	O.G. Print Figure 1

Issue Classification	Application/Control No.	Applicant(s)/Patent Under Reexamination
	13495577	COUSINS, PETER JOHN
	Examiner	**Art Unit**
	DEVINA PILLAY	1755

US ORIGINAL CLASSIFICATION						INTERNATIONAL CLASSIFICATION										
CLASS		SUBCLASS				CLAIMED					NON-CLAIMED					
136		255				H	0	1	L	31 / 00 (2006.01.01)						
CROSS REFERENCE(S)						H	0	1	L	21 / 00 (2006.01.01)						
						H	0	1	L	31 / 0232 (2014.01.01)						
CLASS	SUBCLASS (ONE SUBCLASS PER BLOCK)															
136	256	258														
438	57	69	72	97	98											
257	436	461														

NONE (Assistant Examiner)	(Date)	**Total Claims Allowed:** 20	
/DEVINA PILLAY/ Primary Examiner.Art Unit 1755 (Primary Examiner)	06/10/2014 (Date)	O.G. Print Claim(s) 9	O.G. Print Figure 1

Issue Classification	Application/Control No.	Applicant(s)/Patent Under Reexamination
	13495577	COUSINS, PETER JOHN
	Examiner	**Art Unit**
	DEVINA PILLAY	1755

☐ Claims renumbered in the same order as presented by applicant ☐ CPA ☐ T.D. ☐ R.1.47

Final	Original	Final	Original	Final	Original	Final	Original	Final	Original	Final	Original	Final	Original	Final	Original
	1		17												
	2		18												
	3		19												
	4		20												
	5	9	21												
	6	10	22												
	7	11	23												
	8	12	24												
1	9	13	25												
2	10	14	26												
3	11	15	27												
4	12	16	28												
5	13	17	29												
6	14	18	30												
7	15	19	31												
8	16	20	32												

NONE (Assistant Examiner)	(Date)	**Total Claims Allowed:** 20	
/DEVINA PILLAY/ Primary Examiner.Art Unit 1755 (Primary Examiner)	06/10/2014 (Date)	O.G. Print Claim(s) 9	O.G. Print Figure 1

U.S. Patent and Trademark Office

Part of Paper No. 20140610

IN THE UNITED STATES PATENT AND TRADEMARK OFFICE

In re Application of:

Peter John COUSINS

Application No.:	13/495,577	Examiner:	PILLAY, DEVINA
Filing Date:	June 13, 2012	Art Unit:	1755

Title: FRONT CONTACT SOLAR CELL WITH FORMED EMITTER

AMENDMENT AFTER ALLOWANCE UNDER 37 C.F.R. §1.312

This paper follows the Notice of Allowance mailed on July 7, 2014.

Please amend the above-identified application as follows.

AMENDMENTS TO THE CLAIMS

1-8. (canceled)

9. (currently amended) A method of fabricating a solar cell having a front side facing the sun to collect solar radiation during normal operation and a backside opposite the front side, the method comprising:

forming a layer of polysilicon over a back surface of an N-type silicon substrate on the backside of the solar cell;

forming a P-type dopant source over the layer of polysilicon;

forming a capping layer over the P-type dopant source; ~~and~~

diffusing P-type dopants from the P-type dopant source to the layer of polysilicon to form a backside junction with the N-type silicon substrate;

diffusing N-type dopants into a front surface of the N-type silicon substrate; and

forming a metal contact on the front side of the solar cell, wherein the metal contact is electrically coupled to the N-type silicon substrate.

10. (original) The method of claim 9 wherein the P-type dopant source comprises borosilicate glass.

11. (original) The method of claim 9 wherein diffusing N-type dopants into the front surface of the N-type silicon substrate includes forming an N-type dopant source over the N-type silicon substrate and diffusing N-type dopants from the N-type dopants source into the N-type silicon substrate.

12. (original) The method of claim 11 wherein the N-type dopant source comprises phosphorus doped silicon dioxide.

13. (original) The method of claim 9 further comprising:

texturing the front surface of the N-type silicon substrate; and

forming an antireflective layer over the textured front surface of the N-type silicon substrate.

14. (original) The method of claim 13 wherein the antireflective layer comprises silicon nitride.

15. (original) The method of claim 9 wherein the diffusion of P-type dopants from the P-type dopant source to the layer of polysilicon and the diffusion of N-type dopants into the front surface of the N-type silicon substrate are performed in situ.

16. (original) The method of claim 9 wherein the capping layer comprises undoped silicon dioxide.

17-20. (canceled)

21. (Previously presented) A method of fabricating a solar cell comprising:

forming a layer of polysilicon over a back surface of a silicon substrate;

forming a first dopant source layer over the layer of polysilicon;

diffusing dopants from the first dopant source layer to the layer of polysilicon to form a backside junction with the silicon substrate;

diffusing dopants into a front surface of the silicon substrate, the front surface of the silicon substrate facing the sun during normal operation; and

forming a metal contact on the front surface of the silicon substrate, wherein the metal contact is electrically coupled to the silicon substrate.

22. (Previously presented) The method of claim 21 wherein the first dopant source layer comprises P-type dopants.

23. (Previously presented) The method of claim 21 wherein the first dopant source layer comprises borosilicate glass.

24. (Previously presented) The method of claim 21 wherein diffusing dopants into the front surface of the silicon substrate comprises forming a second dopant source layer over the silicon substrate and diffusing dopants from the second dopant source layer into the silicon substrate.

25. (Previously presented) The method of claim 24 wherein the second dopant source layer comprises phosphorus doped silicon dioxide.

26. (Previously presented) The method of claim 21 further comprising:

texturing the front surface of the silicon substrate; and

forming an antireflective layer over the textured front surface of the silicon substrate.

27. (Previously presented) The method of claim 21 wherein the diffusion of dopants from the first dopant source layer to the layer of polysilicon and the diffusion of dopants into the front surface of the silicon substrate are performed in situ.

28. (Previously presented) A method of fabricating a solar cell comprising:

forming an oxide layer over a back surface of a silicon substrate;

forming a layer of polysilicon over the oxide layer;

diffusing dopants into the layer of polysilicon to form a backside junction with the silicon substrate;

diffusing dopants into a front surface of the silicon substrate, the front surface of the silicon substrate facing the sun during normal operation; and

forming a metal contact on the front surface of the silicon substrate, wherein the metal contact is electrically coupled to the silicon substrate.

29. (Previously presented) The method of claim 28 wherein diffusing dopants into the layer of polysilicon to form the backside junction with the silicon substrate comprises:

forming a first dopant source layer over the layer of polysilicon; and

diffusing dopants from the first dopant source layer into the layer of polysilicon.

30. (Previously presented) The method of claim 28 wherein diffusing dopants into the front surface of the silicon substrate comprises forming a second dopant source layer over the silicon substrate and diffusing dopants from the second dopant source layer into the silicon substrate.

31. (Previously presented) The method of claim 28 further comprising:

texturing the front surface of the silicon substrate.

32. (Previously presented) The method of claim 31 further comprising:

forming an antireflective layer over the textured front surface of the silicon substrate.

REMARKS

Claim 9 is amended to correct an informality. Entry of the amendment is respectfully submitted.

The Examiner is invited to telephone the undersigned at (408)436-2112 for any questions.

Respectfully submitted,

Dated: July 10, 2014

/Patrick Benedicto/

Patrick D. Benedicto, Reg. No. 40,909
Okamoto & Benedicto LLP
P.O. Box 641330
San Jose, CA 95164
Tel.: (408)436-2110
Fax.: (408)436-2114

Electronic Acknowledgement Receipt

EFS ID:	19549231
Application Number:	13495577
International Application Number:	
Confirmation Number:	3380
Title of Invention:	FRONT CONTACT SOLAR CELL WITH FORMED EMITTER
First Named Inventor/Applicant Name:	Peter John COUSINS
Customer Number:	74254
Filer:	Patrick D. Benedicto/jina mangaoang
Filer Authorized By:	Patrick D. Benedicto
Attorney Docket Number:	10031.004210
Receipt Date:	10-JUL-2014
Filing Date:	13-JUN-2012
Time Stamp:	18:08:23
Application Type:	Utility under 35 USC 111(a)

Payment information:

Submitted with Payment	no

File Listing:

Document Number	Document Description	File Name	File Size(Bytes)/ Message Digest	Multi Part /.zip	Pages (if appl.)
1		S0123US1_312Amendment.pdf	299971 832c57bf0a92c99501c116dd05fb7e49111a54ec	yes	6

	Multipart Description/PDF files in .zip description		
	Document Description	**Start**	**End**
	Amendment after Notice of Allowance (Rule 312)	1	1
	Claims	2	5
	Applicant Arguments/Remarks Made in an Amendment	6	6

Warnings:	
Information:	
Total Files Size (in bytes):	299971

This Acknowledgement Receipt evidences receipt on the noted date by the USPTO of the indicated documents, characterized by the applicant, and including page counts, where applicable. It serves as evidence of receipt similar to a Post Card, as described in MPEP 503.

<u>New Applications Under 35 U.S.C. 111</u>
If a new application is being filed and the application includes the necessary components for a filing date (see 37 CFR 1.53(b)-(d) and MPEP 506), a Filing Receipt (37 CFR 1.54) will be issued in due course and the date shown on this Acknowledgement Receipt will establish the filing date of the application.

<u>National Stage of an International Application under 35 U.S.C. 371</u>
If a timely submission to enter the national stage of an international application is compliant with the conditions of 35 U.S.C. 371 and other applicable requirements a Form PCT/DO/EO/903 indicating acceptance of the application as a national stage submission under 35 U.S.C. 371 will be issued in addition to the Filing Receipt, in due course.

<u>New International Application Filed with the USPTO as a Receiving Office</u>
If a new international application is being filed and the international application includes the necessary components for an international filing date (see PCT Article 11 and MPEP 1810), a Notification of the International Application Number and of the International Filing Date (Form PCT/RO/105) will be issued in due course, subject to prescriptions concerning national security, and the date shown on this Acknowledgement Receipt will establish the international filing date of the application.

OK TO ENTER: /D.P./
08/22/2014

IN THE UNITED STATES PATENT AND TRADEMARK OFFICE

In re Application of:

Peter John COUSINS

Application No.: 13/495,577 Examiner: PILLAY, DEVINA

Filing Date: June 13, 2012 Art Unit: 1755

Title: FRONT CONTACT SOLAR CELL WITH FORMED EMITTER

AMENDMENT AFTER ALLOWANCE UNDER 37 C.F.R. §1.312

This paper follows the Notice of Allowance mailed on July 7, 2014.

Please amend the above-identified application as follows.

UNITED STATES PATENT AND TRADEMARK OFFICE

UNITED STATES DEPARTMENT OF COMMERCE
United States Patent and Trademark Office
Address: COMMISSIONER FOR PATENTS
P.O. Box 1450
Alexandria, Virginia 22313-1450
www.uspto.gov

APPLICATION NO.	FILING DATE	FIRST NAMED INVENTOR	ATTORNEY DOCKET NO.	CONFIRMATION NO.
13/495,577	06/13/2012	Peter John COUSINS	10031.004210	3380

74254 7590 08/25/2014
Okamoto & Benedicto LLP
P.O. Box 641330
San Jose, CA 95164-1330

EXAMINER
PILLAY, DEVINA

ART UNIT	PAPER NUMBER
1755	

MAIL DATE	DELIVERY MODE
08/25/2014	PAPER

Please find below and/or attached an Office communication concerning this application or proceeding.

The time period for reply, if any, is set in the attached communication.

Response to Rule 312 Communication	Application No.	Applicant(s)
	13/495,577	COUSINS, PETER JOHN
	Examiner	**Art Unit**
	DEVINA PILLAY	1755

-- The MAILING DATE of this communication appears on the cover sheet with the correspondence address --

1. ☒ The amendment filed on *10 July 2014* under 37 CFR 1.312 has been considered, and has been:

   a) ☒ entered.

   b) ☐ entered as directed to matters of form not affecting the scope of the invention.

   c) ☐ disapproved because the amendment was filed after the payment of the issue fee.
   Any amendment filed after the date the issue fee is paid must be accompanied by a petition under 37 CFR 1.313(c)(1) and the required fee to withdraw the application from issue.

   d) ☐ disapproved. See explanation below.

   e) ☐ entered in part. See explanation below.

/DEVINA PILLAY/
Primary Examiner, Art Unit 1755

PART B - FEE(S) TRANSMITTAL

Complete and send this form, together with applicable fee(s), to: Mail **Mail Stop ISSUE FEE**
Commissioner for Patents
P.O. Box 1450
Alexandria, Virginia 22313-1450
or Fax (571)-273-2885

INSTRUCTIONS: This form should be used for transmitting the ISSUE FEE and PUBLICATION FEE (if required). Blocks 1 through 5 should be completed where appropriate. All further correspondence including the Patent, advance orders and notification of maintenance fees will be mailed to the current correspondence address as indicated unless corrected below or directed otherwise in Block 1, by (a) specifying a new correspondence address; and/or (b) indicating a separate "FEE ADDRESS" for maintenance fee notifications.

CURRENT CORRESPONDENCE ADDRESS (Note: Use Block 1 for any change of address)

74254 7590 07/07/2014
Okamoto & Benedicto LLP
P.O. Box 641330
San Jose, CA 95164-1330

Note: A certificate of mailing can only be used for domestic mailings of the Fee(s) Transmittal. This certificate cannot be used for any other accompanying papers. Each additional paper, such as an assignment or formal drawing, must have its own certificate of mailing or transmission.

Certificate of Mailing or Transmission
I hereby certify that this Fee(s) Transmittal is being deposited with the United States Postal Service with sufficient postage for first class mail in an envelope addressed to the Mail Stop ISSUE FEE address above, or being facsimile transmitted to the USPTO (571) 273-2885, on the date indicated below.

(Depositor's name)
(Signature)
(Date)

APPLICATION NO.	FILING DATE	FIRST NAMED INVENTOR	ATTORNEY DOCKET NO.	CONFIRMATION NO.
13/495,577	06/13/2012	Peter John COUSINS	10031.004210	3380

TITLE OF INVENTION: FRONT CONTACT SOLAR CELL WITH FORMED EMITTER

APPLN. TYPE	ENTITY STATUS	ISSUE FEE DUE	PUBLICATION FEE DUE	PREV. PAID ISSUE FEE	TOTAL FEE(S) DUE	DATE DUE
nonprovisional	UNDISCOUNTED	$960	$0	$0	$960	10/07/2014

EXAMINER	ART UNIT	CLASS-SUBCLASS
PILLAY, DEVINA	1755	136-256000

1. Change of correspondence address or indication of "Fee Address" (37 CFR 1.363).
☐ Change of correspondence address (or Change of Correspondence Address form PTO/SB/122) attached.
☐ "Fee Address" indication (or "Fee Address" Indication form PTO/SB/47; Rev 03-02 or more recent) attached. **Use of a Customer Number is required.**

2. For printing on the patent front page, list
(1) The names of up to 3 registered patent attorneys or agents OR, alternatively,
(2) The name of a single firm (having as a member a registered attorney or agent) and the names of up to 2 registered patent attorneys or agents. If no name is listed, no name will be printed.

1 Okamoto & Benedicto LLP
2
3

3. ASSIGNEE NAME AND RESIDENCE DATA TO BE PRINTED ON THE PATENT (print or type)

PLEASE NOTE: Unless an assignee is identified below, no assignee data will appear on the patent. If an assignee is identified below, the document has been filed for recordation as set forth in 37 CFR 3.11. Completion of this form is NOT a substitute for filing an assignment.

(A) NAME OF ASSIGNEE: SunPower Corporation

(B) RESIDENCE: (CITY and STATE OR COUNTRY): San Jose, California

Please check the appropriate assignee category or categories (will not be printed on the patent) : ☐ Individual ☒ Corporation or other private group entity ☐ Government

4a. The following fee(s) are submitted:
☒ Issue Fee
☐ Publication Fee (No small entity discount permitted)
☐ Advance Order - # of Copies _____

4b. Payment of Fee(s): (**Please first reapply any previously paid issue fee shown above**)
☐ A check is enclosed.
☒ Payment by credit card. Form PTO-2038 is attached.
☒ The Director is hereby authorized to charge the required fee(s), any deficiency, or credits any overpayment, to Deposit Account Number 50-2427 (enclose an extra copy of this form).

5. **Change in Entity Status** (from status indicated above)
☐ Applicant certifying micro entity status. See 37 CFR 1.29
NOTE: Absent a valid certification of Micro Entity Status (see forms PTO/SB/15A and 15B), issue fee payment in the micro entity amount will not be accepted at the risk of application abandonment.
☐ Applicant asserting small entity status. See 37 CFR 1.27
NOTE: If the application was previously under micro entity status, checking this box will be taken to be a notification of loss of entitlement to micro entity status.
☐ Applicant changing to regular undiscounted fee status.
NOTE: Checking this box will be taken to be a notification of loss of entitlement to small or micro entity status, as applicable.

NOTE: This form must be signed in accordance with 37 CFR 1.31 and 1.33. See 37 CFR 1.4 for signature requirements and certifications.

Authorized Signature /Patrick D. Benedicto, Reg. No. 40,909/ Date 09/29/2014
Typed or printed name PATRICK D. BENEDICTO Registration No. 40,909

IN THE UNITED STATES PATENT AND TRADEMARK OFFICE

In re Application of:

Peter John COUSINS

Application No.: 13/495,577 Examiner: PILLAY, DEVINA

Filing Date: 06/13/2012 Art Unit: 1755

Title: FRONT CONTACT SOLAR CELL WITH FORMED EMITTER

COMMENTS ON STATEMENT OF REASONS FOR ALLOWANCE

Applicants respectfully submit that the Examiner's statement of reasons for allowance does not necessarily provide all the reasons why the present claims are allowable. Applicants respectfully submit that the present claims are allowable because each of the claims recites a combination of features that is not taught or suggested by the prior art.

Respectfully submitted,

Dated: September 29, 2014

/Patrick Benedicto/

Patrick D. Benedicto, Reg. No. 40,909
Okamoto & Benedicto LLP
P.O. Box 641330
San Jose, CA 95164
Tel.: (408)436-2110
Fax.: (408)436-2114

Electronic Patent Application Fee Transmittal

Application Number:	13495577
Filing Date:	13-Jun-2012
Title of Invention:	FRONT CONTACT SOLAR CELL WITH FORMED EMITTER
First Named Inventor/Applicant Name:	Peter John COUSINS
Filer:	Patrick D. Benedicto/jina mangaoang
Attorney Docket Number:	10031.004210

Filed as Large Entity

Utility under 35 USC 111(a) Filing Fees

Description	Fee Code	Quantity	Amount	Sub-Total in USD($)
Basic Filing:				
Pages:				
Claims:				
Miscellaneous-Filing:				
Petition:				
Patent-Appeals-and-Interference:				
Post-Allowance-and-Post-Issuance:				
Utility Appl Issue Fee	1501	1	960	960
Extension-of-Time:				

Description	Fee Code	Quantity	Amount	Sub-Total in USD($)
Miscellaneous:				
			Total in USD ($)	**960**

Electronic Acknowledgement Receipt

EFS ID:	20271079
Application Number:	13495577
International Application Number:	
Confirmation Number:	3380
Title of Invention:	FRONT CONTACT SOLAR CELL WITH FORMED EMITTER
First Named Inventor/Applicant Name:	Peter John COUSINS
Customer Number:	74254
Filer:	Patrick D. Benedicto/jina mangaoang
Filer Authorized By:	Patrick D. Benedicto
Attorney Docket Number:	10031.004210
Receipt Date:	29-SEP-2014
Filing Date:	13-JUN-2012
Time Stamp:	17:43:19
Application Type:	Utility under 35 USC 111(a)

Payment information:

Submitted with Payment	yes
Payment Type	Credit Card
Payment was successfully received in RAM	$960
RAM confirmation Number	4972
Deposit Account	
Authorized User	

File Listing:

Document Number	Document Description	File Name	File Size(Bytes)/ Message Digest	Multi Part /.zip	Pages (if appl.)

1	Issue Fee Payment (PTO-85B)	S0123US1_IssueFeePTOL85.pdf	124768 440dd7d2513207765be107d71b9dc3ed9a77e0f3	no	1
Warnings:					
Information:					
2	Miscellaneous Incoming Letter	S0123US1_CommentsOnStatementOfReasonsForAllowance.pdf	58383 d868d0afcf894d650cd39649aef826fe9bc51054	no	1
Warnings:					
Information:					
3	Fee Worksheet (SB06)	fee-info.pdf	30470 a7dc626517d9f90e53dc12e9b66c8a55b480242e	no	2
Warnings:					
Information:					
			Total Files Size (in bytes):	213621	

This Acknowledgement Receipt evidences receipt on the noted date by the USPTO of the indicated documents, characterized by the applicant, and including page counts, where applicable. It serves as evidence of receipt similar to a Post Card, as described in MPEP 503.

<u>New Applications Under 35 U.S.C. 111</u>
If a new application is being filed and the application includes the necessary components for a filing date (see 37 CFR 1.53(b)-(d) and MPEP 506), a Filing Receipt (37 CFR 1.54) will be issued in due course and the date shown on this Acknowledgement Receipt will establish the filing date of the application.

<u>National Stage of an International Application under 35 U.S.C. 371</u>
If a timely submission to enter the national stage of an international application is compliant with the conditions of 35 U.S.C. 371 and other applicable requirements a Form PCT/DO/EO/903 indicating acceptance of the application as a national stage submission under 35 U.S.C. 371 will be issued in addition to the Filing Receipt, in due course.

<u>New International Application Filed with the USPTO as a Receiving Office</u>
If a new international application is being filed and the international application includes the necessary components for an international filing date (see PCT Article 11 and MPEP 1810), a Notification of the International Application Number and of the International Filing Date (Form PCT/RO/105) will be issued in due course, subject to prescriptions concerning national security, and the date shown on this Acknowledgement Receipt will establish the international filing date of the application.

UNITED STATES PATENT AND TRADEMARK OFFICE

UNITED STATES DEPARTMENT OF COMMERCE
United States Patent and Trademark Office
Address: COMMISSIONER FOR PATENTS
P.O. Box 1450
Alexandria, Virginia 22313-1450
www.uspto.gov

APPLICATION NO.	ISSUE DATE	PATENT NO.	ATTORNEY DOCKET NO.	CONFIRMATION NO.
13/495,577	11/04/2014	8878053	10031.004210	3380

74254 7590 10/15/2014
Okamoto & Benedicto LLP
P.O. Box 641330
San Jose, CA 95164-1330

ISSUE NOTIFICATION

The projected patent number and issue date are specified above.

Determination of Patent Term Adjustment under 35 U.S.C. 154 (b)
(application filed on or after May 29, 2000)

The Patent Term Adjustment is 0 day(s). Any patent to issue from the above-identified application will include an indication of the adjustment on the front page.

If a Continued Prosecution Application (CPA) was filed in the above-identified application, the filing date that determines Patent Term Adjustment is the filing date of the most recent CPA.

Applicant will be able to obtain more detailed information by accessing the Patent Application Information Retrieval (PAIR) WEB site (http://pair.uspto.gov).

Any questions regarding the Patent Term Extension or Adjustment determination should be directed to the Office of Patent Legal Administration at (571)-272-7702. Questions relating to issue and publication fee payments should be directed to the Application Assistance Unit (AAU) of the Office of Data Management (ODM) at (571)-272-4200.

APPLICANT(s) (Please see PAIR WEB site http://pair.uspto.gov for additional applicants):

Peter John COUSINS, Menlo Park, CA;

The United States represents the largest, most dynamic marketplace in the world and is an unparalleled location for business investment, innovation, and commercialization of new technologies. The USA offers tremendous resources and advantages for those who invest and manufacture goods here. Through SelectUSA, our nation works to encourage and facilitate business investment. To learn more about why the USA is the best country in the world to develop technology, manufacture products, and grow your business, visit SelectUSA.gov.

PTO/AIA/122 (08-12)
Approved for use through 03/31/2021. OMB 0651-0035
U.S. Patent and Trademark Office; U.S. DEPARTMENT OF COMMERCE
Under the Paperwork Reduction Act of 1995, no persons are required to respond to a collection of information unless it displays a valid OMB control number.

CHANGE OF CORRESPONDENCE ADDRESS
Application

Address to:
Commissioner for Patents
P.O. Box 1450
Alexandria, VA 22313-1450

Application Number	13/495,577
Filing Date	2012-06-13
First Named Inventor	Cousins, Peter J.
Art Unit	1755
Examiner Name	Pillay, Devina
Attorney Docket Number	S0123US1

Please change the Correspondence Address for the above-identified patent application to:

[■] The address associated with Customer Number: 144187

OR

[ ] Firm or Individual Name

Address

City	State	Zip

Country

Telephone	Email

This form cannot be used to change the data associated with a Customer Number. To change the data associated with an existing Customer Number use "Request for Customer Number Data Change" (PTO/SB/124).

I am the:

[ ] Applicant

[■] Attorney or agent of record. Registration Number 72,360.

[ ] Registered practitioner named in the application transmittal papers who acts in a representative capacity under 37 CFR 1.34. See 37 CFR 1.33(a)(1). Registration Number _____.

Signature /Jackson Ho/

Typed or Printed Name Jackson Ho

Date 08-16-2022	Telephone 408-331-1671

NOTE: This form must be signed in accordance with 37 CFR 1.33. See 37 CFR 1.4(d) for signature requirements and certifications.
Submit multiple forms if more than one signature is required, see below*.

[ ] *Total of _____forms are submitted.

This collection of information is required by 37 CFR 1.33. The information is required to obtain or retain a benefit by the public which is to file (and by the USPTO to process) an application. Confidentiality is governed by 35 U.S.C. 122 and 37 CFR 1.11 and 1.14. This collection is estimated to take 3 minutes to complete, including gathering, preparing, and submitting the completed application form to the USPTO. Time will vary depending upon the individual case. Any comments on the amount of time you require to complete this form and/or suggestions for reducing this burden, should be sent to the Chief Information Officer, U.S. Patent and Trademark Office, U.S. Department of Commerce, P.O. Box 1450, Alexandria, VA 22313-1450. DO NOT SEND FEES OR COMPLETED FORMS TO THIS ADDRESS. **SEND TO: Commissioner for Patents, P.O. Box 1450, Alexandria, VA 22313-1450.**

If you need assistance in completing the form, call 1-800-PTO-9199 and select option 2.

Privacy Act Statement

The **Privacy Act of 1974 (P.L. 93-579)** requires that you be given certain information in connection with your submission of the attached form related to a patent application or patent. Accordingly, pursuant to the requirements of the Act, please be advised that: (1) the general authority for the collection of this information is 35 U.S.C. 2(b)(2); (2) furnishing of the information solicited is voluntary; and (3) the principal purpose for which the information is used by the U.S. Patent and Trademark Office is to process and/or examine your submission related to a patent application or patent. If you do not furnish the requested information, the U.S. Patent and Trademark Office may not be able to process and/or examine your submission, which may result in termination of proceedings or abandonment of the application or expiration of the patent.

The information provided by you in this form will be subject to the following routine uses:

1. The information on this form will be treated confidentially to the extent allowed under the Freedom of Information Act (5 U.S.C. 552) and the Privacy Act (5 U.S.C 552a). Records from this system of records may be disclosed to the Department of Justice to determine whether disclosure of these records is required by the Freedom of Information Act.
2. A record from this system of records may be disclosed, as a routine use, in the course of presenting evidence to a court, magistrate, or administrative tribunal, including disclosures to opposing counsel in the course of settlement negotiations.
3. A record in this system of records may be disclosed, as a routine use, to a Member of Congress submitting a request involving an individual, to whom the record pertains, when the individual has requested assistance from the Member with respect to the subject matter of the record.
4. A record in this system of records may be disclosed, as a routine use, to a contractor of the Agency having need for the information in order to perform a contract. Recipients of information shall be required to comply with the requirements of the Privacy Act of 1974, as amended, pursuant to 5 U.S.C. 552a(m).
5. A record related to an International Application filed under the Patent Cooperation Treaty in this system of records may be disclosed, as a routine use, to the International Bureau of the World Intellectual Property Organization, pursuant to the Patent Cooperation Treaty.
6. A record in this system of records may be disclosed, as a routine use, to another federal agency for purposes of National Security review (35 U.S.C. 181) and for review pursuant to the Atomic Energy Act (42 U.S.C. 218(c)).
7. A record from this system of records may be disclosed, as a routine use, to the Administrator, General Services, or his/her designee, during an inspection of records conducted by GSA as part of that agency's responsibility to recommend improvements in records management practices and programs, under authority of 44 U.S.C. 2904 and 2906. Such disclosure shall be made in accordance with the GSA regulations governing inspection of records for this purpose, and any other relevant (*i.e.*, GSA or Commerce) directive. Such disclosure shall not be used to make determinations about individuals.
8. A record from this system of records may be disclosed, as a routine use, to the public after either publication of the application pursuant to 35 U.S.C. 122(b) or issuance of a patent pursuant to 35 U.S.C. 151. Further, a record may be disclosed, subject to the limitations of 37 CFR 1.14, as a routine use, to the public if the record was filed in an application which became abandoned or in which the proceedings were terminated and which application is referenced by either a published application, an application open to public inspection or an issued patent.
9. A record from this system of records may be disclosed, as a routine use, to a Federal, State, or local law enforcement agency, if the USPTO becomes aware of a violation or potential violation of law or regulation.

Electronic Acknowledgement Receipt

EFS ID:	46423909
Application Number:	13495577
International Application Number:	
Confirmation Number:	3380
Title of Invention:	FRONT CONTACT SOLAR CELL WITH FORMED EMITTER
First Named Inventor/Applicant Name:	Peter John COUSINS
Customer Number:	74254
Filer:	Jackson Ho/Julie Fosnaugh
Filer Authorized By:	Jackson Ho
Attorney Docket Number:	10031.004210
Receipt Date:	16-AUG-2022
Filing Date:	13-JUN-2012
Time Stamp:	17:43:51
Application Type:	Utility under 35 USC 111(a)

Payment information:

Submitted with Payment	no

File Listing:

Document Number	Document Description	File Name	File Size(Bytes)/ Message Digest	Multi Part /.zip	Pages (if appl.)
1	Assignee showing of ownership per 37 CFR 3.73	S0123US1_AssnStmt373c_EF.pdf	547762 aafe28015be9e3b503018e804e04c01af979771b	no	4

Warnings:

Information:					
2	Change of Address	S0123US1_ChangeCorresAddress_EF.pdf	243905 8d16226baa3dfe4bafc4a0a95559f023001b3585	no	2
Warnings:					
Information:					
			Total Files Size (in bytes):	791667	

This Acknowledgement Receipt evidences receipt on the noted date by the USPTO of the indicated documents, characterized by the applicant, and including page counts, where applicable. It serves as evidence of receipt similar to a Post Card, as described in MPEP 503.

New Applications Under 35 U.S.C. 111
If a new application is being filed and the application includes the necessary components for a filing date (see 37 CFR 1.53(b)-(d) and MPEP 506), a Filing Receipt (37 CFR 1.54) will be issued in due course and the date shown on this Acknowledgement Receipt will establish the filing date of the application.
National Stage of an International Application under 35 U.S.C. 371
If a timely submission to enter the national stage of an international application is compliant with the conditions of 35 U.S.C. 371 and other applicable requirements a Form PCT/DO/EO/903 indicating acceptance of the application as a national stage submission under 35 U.S.C. 371 will be issued in addition to the Filing Receipt, in due course.
New International Application Filed with the USPTO as a Receiving Office
If a new international application is being filed and the international application includes the necessary components for an international filing date (see PCT Article 11 and MPEP 1810), a Notification of the International Application Number and of the International Filing Date (Form PCT/RO/105) will be issued in due course, subject to prescriptions concerning national security, and the date shown on this Acknowledgement Receipt will establish the international filing date of the application.

Under the Paperwork Reduction Act of 1995, no persons are required to respond to a collection of information unless it displays a valid OMB control number.

STATEMENT UNDER 37 CFR 3.73(c)

Applicant/Patent Owner: SUNPOWER CORPORATION

Application No./Patent No.: 13/495,577 Filed/Issue Date: 06-13-2012

Titled: FRONT CONTACT SOLAR CELL WITH FORMED EMITTER

SUNPOWER CORPORATION, a corporation

(Name of Assignee) (Type of Assignee, e.g., corporation, partnership, university, government agency, etc.)

states that, for the patent application/patent identified above, it is (choose **one** of options 1, 2, 3 or 4 below):

1. ☑ The assignee of the entire right, title, and interest.

2. ☐ An assignee of less than the entire right, title, and interest (check applicable box):

☐ The extent (by percentage) of its ownership interest is _____%. Additional Statement(s) by the owners holding the balance of the interest must be submitted to account for 100% of the ownership interest.

☐ There are unspecified percentages of ownership. The other parties, including inventors, who together own the entire right, title and interest are:

Additional Statement(s) by the owner(s) holding the balance of the interest must be submitted to account for the entire right, title, and interest.

3. ☐ The assignee of an undivided interest in the entirety (a complete assignment from one of the joint inventors was made). The other parties, including inventors, who together own the entire right, title, and interest are:

Additional Statement(s) by the owner(s) holding the balance of the interest must be submitted to account for the entire right, title, and interest.

4. ☐ The recipient, via a court proceeding or the like (*e.g.*, bankruptcy, probate), of an undivided interest in the entirety (a complete transfer of ownership interest was made). The certified document(s) showing the transfer is attached.

The interest identified in option 1, 2 or 3 above (not option 4) is evidenced by either (choose **one** of options A or B below):

A. ☐ An assignment from the inventor(s) of the patent application/patent identified above. The assignment was recorded in the United States Patent and Trademark Office at Reel _____, Frame _____, or for which a copy thereof is attached.

B. ☑ A chain of title from the inventor(s), of the patent application/patent identified above, to the current assignee as follows:

1. From: Peter John Cousins To: SUNPOWER CORPORATION

The document was recorded in the United States Patent and Trademark Office at

Reel 020595, Frame 0792, or for which a copy thereof is attached.

2. From: _____ To: _____

The document was recorded in the United States Patent and Trademark Office at

Reel _____, Frame _____, or for which a copy thereof is attached.

This collection of information is required by 37 CFR 3.73(b). The information is required to obtain or retain a benefit by the public which is to file (and by the USPTO to process) an application. Confidentiality is governed by 35 U.S.C. 122 and 37 CFR 1.11 and 1.14. This collection is estimated to take 12 minutes to complete, including gathering, preparing, and submitting the completed application form to the USPTO. Time will vary depending upon the individual case. Any comments on the amount of time you require to complete this form and/or suggestions for reducing this burden, should be sent to the Chief Information Officer, U.S. Patent and Trademark Office, U.S. Department of Commerce, P.O. Box 1450, Alexandria, VA 22313-1450. DO NOT SEND FEES OR COMPLETED FORMS TO THIS ADDRESS. **SEND TO: Commissioner for Patents, P.O. Box 1450, Alexandria, VA 22313-1450.**

If you need assistance in completing the form, call 1-800-PTO-9199 and select option 2.

Under the Paperwork Reduction Act of 1995, no persons are required to respond to a collection of information unless it displays a valid OMB control number.

STATEMENT UNDER 37 CFR 3.73(c)

3. From: _____ To: _____

The document was recorded in the United States Patent and Trademark Office at

Reel _____, Frame _____, or for which a copy thereof is attached.

4. From: _____ To: _____

The document was recorded in the United States Patent and Trademark Office at

Reel _____, Frame _____, or for which a copy thereof is attached.

5. From: _____ To: _____

The document was recorded in the United States Patent and Trademark Office at

Reel _____, Frame _____, or for which a copy thereof is attached.

6. From: _____ To: _____

The document was recorded in the United States Patent and Trademark Office at

Reel _____, Frame _____, or for which a copy thereof is attached.

☐ Additional documents in the chain of title are listed on a supplemental sheet(s).

☑ As required by 37 CFR 3.73(c)(1)(i), the documentary evidence of the chain of title from the original owner to the assignee was, or concurrently is being, submitted for recordation pursuant to 37 CFR 3.11.

[NOTE: A separate copy (i.e., a true copy of the original assignment document(s)) must be submitted to Assignment Division in accordance with 37 CFR Part 3, to record the assignment in the records of the USPTO. See MPEP 302.08]

The undersigned (whose title is supplied below) is authorized to act on behalf of the assignee.

/Jackson Ho/	08-16-2022
Signature	Date
Jackson Ho	72,360
Printed or Typed Name	Title or Registration Number

Privacy Act Statement

The **Privacy Act of 1974 (P.L. 93-579)** requires that you be given certain information in connection with your submission of the attached form related to a patent application or patent. Accordingly, pursuant to the requirements of the Act, please be advised that: (1) the general authority for the collection of this information is 35 U.S.C. 2(b)(2); (2) furnishing of the information solicited is voluntary; and (3) the principal purpose for which the information is used by the U.S. Patent and Trademark Office is to process and/or examine your submission related to a patent application or patent. If you do not furnish the requested information, the U.S. Patent and Trademark Office may not be able to process and/or examine your submission, which may result in termination of proceedings or abandonment of the application or expiration of the patent.

The information provided by you in this form will be subject to the following routine uses:

1. The information on this form will be treated confidentially to the extent allowed under the Freedom of Information Act (5 U.S.C. 552) and the Privacy Act (5 U.S.C 552a). Records from this system of records may be disclosed to the Department of Justice to determine whether disclosure of these records is required by the Freedom of Information Act.
2. A record from this system of records may be disclosed, as a routine use, in the course of presenting evidence to a court, magistrate, or administrative tribunal, including disclosures to opposing counsel in the course of settlement negotiations.
3. A record in this system of records may be disclosed, as a routine use, to a Member of Congress submitting a request involving an individual, to whom the record pertains, when the individual has requested assistance from the Member with respect to the subject matter of the record.
4. A record in this system of records may be disclosed, as a routine use, to a contractor of the Agency having need for the information in order to perform a contract. Recipients of information shall be required to comply with the requirements of the Privacy Act of 1974, as amended, pursuant to 5 U.S.C. 552a(m).
5. A record related to an International Application filed under the Patent Cooperation Treaty in this system of records may be disclosed, as a routine use, to the International Bureau of the World Intellectual Property Organization, pursuant to the Patent Cooperation Treaty.
6. A record in this system of records may be disclosed, as a routine use, to another federal agency for purposes of National Security review (35 U.S.C. 181) and for review pursuant to the Atomic Energy Act (42 U.S.C. 218(c)).
7. A record from this system of records may be disclosed, as a routine use, to the Administrator, General Services, or his/her designee, during an inspection of records conducted by GSA as part of that agency's responsibility to recommend improvements in records management practices and programs, under authority of 44 U.S.C. 2904 and 2906. Such disclosure shall be made in accordance with the GSA regulations governing inspection of records for this purpose, and any other relevant (*i.e.*, GSA or Commerce) directive. Such disclosure shall not be used to make determinations about individuals.
8. A record from this system of records may be disclosed, as a routine use, to the public after either publication of the application pursuant to 35 U.S.C. 122(b) or issuance of a patent pursuant to 35 U.S.C. 151. Further, a record may be disclosed, subject to the limitations of 37 CFR 1.14, as a routine use, to the public if the record was filed in an application which became abandoned or in which the proceedings were terminated and which application is referenced by either a published application, an application open to public inspection or an issued patent.
9. A record from this system of records may be disclosed, as a routine use, to a Federal, State, or local law enforcement agency, if the USPTO becomes aware of a violation or potential violation of law or regulation.

PTO/AIA/80 (07-12)
Approved for use through 11/30/2014. OMB 0651-0035
U.S. Patent and Trademark Office; U.S. DEPARTMENT OF COMMERCE
Under the Paperwork Reduction Act of 1995, no persons are required to respond to a collection of information unless it displays a valid OMB control number.

POWER OF ATTORNEY TO PROSECUTE APPLICATIONS BEFORE THE USPTO

I hereby revoke all previous powers of attorney given in the application identified in the attached statement under 37 CFR 3.73(c).

I hereby appoint:

[■] Practitioners associated with Customer Number: 144187

OR

[ ] Practitioner(s) named below (if more than ten patent practitioners are to be named, then a customer number must be used):

Name	Registration Number	Name	Registration Number

As attorney(s) or agent(s) to represent the undersigned before the United States Patent and Trademark Office (USPTO) in connection with any and all patent applications assigned only to the undersigned according to the USPTO assignment records or assignments documents attached to this form in accordance with 37 CFR 3.73(c).

Please change the correspondence address for the application identified in the attached statement under 37 CFR 3.73(c) to:

[■] The address associated with Customer Number: 144187

OR

Firm or Individual Name			
Address			
City		State	Zip
Country			
Telephone		Email	

Assignee Name and Address: SunPower Corporation
51 Rio Robles
San Jose, CA 95134

A copy of this form, together with a statement under 37 CFR 3.73(c) (Form PTO/AIA/96 or equivalent) is required to be Filed in each application in which this form is used. The statement under 37 CFR 3.73(c) may be completed by one of The practitioners appointed in this form, and must identify the application in which this Power of Attorney is to be filed.

SIGNATURE of Assignee of Record

The individual whose signature and title is supplied below is authorized to act on behalf of the assignee

Signature		Date	27-Feb-2017
Name	Marc Robinson	Telephone	512.735.5911
Title	Senior IP Counsel		

This collection of information is required by 37 CFR 1.31, 1.32 and 1.33. The information is required to obtain or retain a benefit by the public which is to file (and by the USPTO to process) an application. Confidentiality is governed by 35 U.S.C. 122 and 37 CFR 1.11 and 1.14. This collection is estimated to take 3 minutes to complete, including gathering, preparing, and submitting the completed application form to the USPTO. Time will vary depending upon the individual case. Any comments on the amount of time you require to complete this form and/or suggestions for reducing this burden, should be sent to the Chief Information Officer, U.S. Patent and Trademark Office, U.S. Department of Commerce, P.O. Box 1450, Alexandria, VA 22313-1450. DO NOT SEND FEES OR COMPLETED FORMS TO THIS ADDRESS. **SEND TO: Commissioner for Patents, P.O. Box 1450, Alexandria, VA 22313-1450.**

If you need assistance in completing the form, call 1-800-PTO-9199 and select option 2.

UNITED STATES PATENT AND TRADEMARK OFFICE

UNITED STATES DEPARTMENT OF COMMERCE
United States Patent and Trademark Office
Address: COMMISSIONER FOR PATENTS
P.O. Box 1450
Alexandria, Virginia 22313-1450
www.uspto.gov

APPLICATION NUMBER	FILING OR 371(C) DATE	FIRST NAMED APPLICANT	ATTY. DOCKET NO./TITLE
13/495,577	06/13/2012	Peter John COUSINS	S0123US1

CONFIRMATION NO. 3380

POA ACCEPTANCE LETTER

144187
Schmidt Patent Law, Inc.
2635 N. First Street
Suite 150
San Jose, CA 95134-2000

OC000000136006876

Date Mailed: 08/24/2022

NOTICE OF ACCEPTANCE OF POWER OF ATTORNEY

This is in response to the Power of Attorney filed 08/16/2022.

The Power of Attorney in this application is accepted. Correspondence in this application will be mailed to the above address as provided by 37 CFR 1.33.

Questions about the contents of this notice and the requirements it sets forth should be directed to the Office of Data Management, Application Assistance Unit, at **(571) 272-4000** or **(571) 272-4200** or **1-888-786-0101**.

/nrhayden/

UNITED STATES PATENT AND TRADEMARK OFFICE

UNITED STATES DEPARTMENT OF COMMERCE
United States Patent and Trademark Office
Address: COMMISSIONER FOR PATENTS
P.O. Box 1450
Alexandria, Virginia 22313-1450
www.uspto.gov

APPLICATION NUMBER	FILING OR 371(C) DATE	FIRST NAMED APPLICANT	ATTY. DOCKET NO./TITLE
13/495,577	06/13/2012	Peter John COUSINS	S0123US1

CONFIRMATION NO. 3380

POWER OF ATTORNEY NOTICE

144187
Schmidt Patent Law, Inc.
2635 N. First Street
Suite 150
San Jose, CA 95134-2000

OC000000136006821

Date Mailed: 08/24/2022

NOTICE REGARDING CHANGE OF POWER OF ATTORNEY

This is in response to the Power of Attorney filed 08/16/2022.

- The Power of Attorney to you in this application has been revoked by the assignee who has intervened as provided by 37 CFR 3.71. Future correspondence will be mailed to the new address of record(37 CFR 1.33).

Questions about the contents of this notice and the requirements it sets forth should be directed to the Office of Data Management, Application Assistance Unit, at **(571) 272-4000** or **(571) 272-4200** or **1-888-786-0101**.

/nrhayden/

PTO/AIA/80 (07-17)
Approved for use through 03/31/2021. OMB 0651-0035
U.S. Patent and Trademark Office; U.S. DEPARTMENT OF COMMERCE
Under the Paperwork Reduction Act of 1995, no person is required to respond to a collection of information unless it displays a valid OMB control number

POWER OF ATTORNEY TO PROSECUTE APPLICATIONS BEFORE THE USPTO

I hereby revoke all previous powers of attorney given in the application identified in the attached statement under 37 CFR 3.73(c).

I hereby appoint:

[X] Practitioners associated with Customer Number: 188295

OR

[ ] Practitioner(s) named below (if more than ten patent practitioners are to be named, then a customer number must be used):

Name	Registration Number	Name	Registration Number

As attorney(s) or agent(s) to represent the undersigned before the United States Patent and Trademark Office (USPTO) in connection with any and all patent applications assigned only to the undersigned according to the USPTO assignment records or assignment documents attached to this form in accordance with 37 CFR 3.73(c).

Please change the correspondence address for the application identified in the attached statement under 37 CFR 3.73(c) to:

[X] The address associated with Customer Number: 188295

OR

[ ]

Firm or individual name		
Address		
City	State	Zip
Country		
Telephone	Email	

Assignee name and address: Maxeon Solar Pte. Ltd.
8 Marina Boulevard #05-02
Marina Bay Financial Centre
Singapore 018981
SG

A copy of this form, together with a statement under 37 CFR 3.73(c) (Form PTO/AIA/96 or equivalent) is required to be filed in each application in which this form is used. The statement under 37 CFR 3.73(c) may be completed by one of the practitioners appointed in this form, and must identify the application in which this Power of Attorney is to be filed.

SIGNATURE of Assignee of Record

The individual whose signature and title is supplied below is authorized to act on behalf of the assignee.

Signature	Date 2022-Sep-24
Name Marc Robinson	Telephone
Title Associate General Counsel, Assistant Secretary	

This collection of information is required by 37 CFR 1.31, 1.32, and 1.33. The information is required to obtain or retain a benefit by the public, which is to update (and by the USPTO to process) the file of a patent or reexamination proceeding. Confidentiality is governed by 35 U.S.C. 122 and 37 CFR 1.11 and 1.14. This collection is estimated to take 18 minutes to complete, including gathering, preparing, and submitting the completed application form to the USPTO. Time will vary depending upon the individual case. Any comments on the amount of time you require to complete this form and/or suggestions for reducing this burden, should be sent to the Chief Information Officer, U.S. Patent and Trademark Office, U.S. Department of Commerce, P.O. Box 1450, Alexandria, VA 22313-1450. DO NOT SEND FEES OR COMPLETED FORMS TO THIS ADDRESS. **SEND TO: Commissioner for Patents, P.O. Box 1450, Alexandria, VA 22313-1450.**
If you need assistance in completing the form, call 1-800-PTO-9199 and select option 2.

Electronic Acknowledgement Receipt

EFS ID:	47987341
Application Number:	13495577
International Application Number:	
Confirmation Number:	3380
Title of Invention:	FRONT CONTACT SOLAR CELL WITH FORMED EMITTER
First Named Inventor/Applicant Name:	Peter John COUSINS
Customer Number:	144187
Filer:	Jackson Ho/Julie Fosnaugh
Filer Authorized By:	Jackson Ho
Attorney Docket Number:	S0123US1
Receipt Date:	11-MAY-2023
Filing Date:	13-JUN-2012
Time Stamp:	14:18:09
Application Type:	Utility under 35 USC 111(a)

Payment information:

Submitted with Payment	no

File Listing:

Document Number	Document Description	File Name	File Size(Bytes)/ Message Digest	Multi Part /.zip	Pages (if appl.)
1	Assignee showing of ownership per 37 CFR 3.73	S0123US1_StmtUnder373c_EF.pdf	113201 aa0d080dc6d6e0726cf03b0d6a8092f0d0b1eb93	no	3

Warnings:

Information:					
2	Power of Attorney	188295_POA_EF.pdf	174774 ecb5331c4377d432faf50bcdf84e00666947b4b1	no	1
Warnings:					
Information:					
			Total Files Size (in bytes):	287975	

This Acknowledgement Receipt evidences receipt on the noted date by the USPTO of the indicated documents, characterized by the applicant, and including page counts, where applicable. It serves as evidence of receipt similar to a Post Card, as described in MPEP 503.

New Applications Under 35 U.S.C. 111
If a new application is being filed and the application includes the necessary components for a filing date (see 37 CFR 1.53(b)-(d) and MPEP 506), a Filing Receipt (37 CFR 1.54) will be issued in due course and the date shown on this Acknowledgement Receipt will establish the filing date of the application.
National Stage of an International Application under 35 U.S.C. 371
If a timely submission to enter the national stage of an international application is compliant with the conditions of 35 U.S.C. 371 and other applicable requirements a Form PCT/DO/EO/903 indicating acceptance of the application as a national stage submission under 35 U.S.C. 371 will be issued in addition to the Filing Receipt, in due course.
New International Application Filed with the USPTO as a Receiving Office
If a new international application is being filed and the international application includes the necessary components for an international filing date (see PCT Article 11 and MPEP 1810), a Notification of the International Application Number and of the International Filing Date (Form PCT/RO/105) will be issued in due course, subject to prescriptions concerning national security, and the date shown on this Acknowledgement Receipt will establish the international filing date of the application.

Under the Paperwork Reduction Act of 1995, no persons are required to respond to a collection of information unless it displays a valid OMB control number.

STATEMENT UNDER 37 CFR 3.73(c)

Applicant/Patent Owner: MAXEON SOLAR PTE. LTD.

Application No./Patent No.: 13/495,577 Filed/Issue Date: 06/13/2012

Titled: FRONT CONTACT SOLAR CELL WITH FORMED EMITTER

MAXEON SOLAR PTE. LTD., a corporation

(Name of Assignee) (Type of Assignee, e.g., corporation, partnership, university, government agency, etc.)

states that, for the patent application/patent identified above, it is (choose **one** of options 1, 2, 3 or 4 below):

1. ☑ The assignee of the entire right, title, and interest.

2. ☐ An assignee of less than the entire right, title, and interest (check applicable box):

☐ The extent (by percentage) of its ownership interest is _____%. Additional Statement(s) by the owners holding the balance of the interest must be submitted to account for 100% of the ownership interest.

☐ There are unspecified percentages of ownership. The other parties, including inventors, who together own the entire right, title and interest are:

Additional Statement(s) by the owner(s) holding the balance of the interest must be submitted to account for the entire right, title, and interest.

3. ☐ The assignee of an undivided interest in the entirety (a complete assignment from one of the joint inventors was made). The other parties, including inventors, who together own the entire right, title, and interest are:

Additional Statement(s) by the owner(s) holding the balance of the interest must be submitted to account for the entire right, title, and interest.

4. ☐ The recipient, via a court proceeding or the like (*e.g.*, bankruptcy, probate), of an undivided interest in the entirety (a complete transfer of ownership interest was made). The certified document(s) showing the transfer is attached.

The interest identified in option 1, 2 or 3 above (not option 4) is evidenced by either (choose **one** of options A or B below):

A. ☐ An assignment from the inventor(s) of the patent application/patent identified above. The assignment was recorded in the United States Patent and Trademark Office at Reel _____, Frame _____, or for which a copy thereof is attached.

B. ☑ A chain of title from the inventor(s), of the patent application/patent identified above, to the current assignee as follows:

1. From: COUSINS, PETER JOHN To: SUNPOWER CORPORATION

The document was recorded in the United States Patent and Trademark Office at Reel 020595, Frame 0791, or for which a copy thereof is attached.

2. From: SUNPOWER CORPORATION To: MAXEON SOLAR PTE. LTD.

The document was recorded in the United States Patent and Trademark Office at Reel 062490, Frame 0742, or for which a copy thereof is attached.

This collection of information is required by 37 CFR 3.73(b). The information is required to obtain or retain a benefit by the public which is to file (and by the USPTO to process) an application. Confidentiality is governed by 35 U.S.C. 122 and 37 CFR 1.11 and 1.14. This collection is estimated to take 12 minutes to complete, including gathering, preparing, and submitting the completed application form to the USPTO. Time will vary depending upon the individual case. Any comments on the amount of time you require to complete this form and/or suggestions for reducing this burden, should be sent to the Chief Information Officer, U.S. Patent and Trademark Office, U.S. Department of Commerce, P.O. Box 1450, Alexandria, VA 22313-1450. DO NOT SEND FEES OR COMPLETED FORMS TO THIS ADDRESS. **SEND TO: Commissioner for Patents, P.O. Box 1450, Alexandria, VA 22313-1450.**

If you need assistance in completing the form, call 1-800-PTO-9199 and select option 2.

Under the Paperwork Reduction Act of 1995, no persons are required to respond to a collection of information unless it displays a valid OMB control number.

STATEMENT UNDER 37 CFR 3.73(c)

3. From: _____ To: _____

The document was recorded in the United States Patent and Trademark Office at

Reel _____, Frame _____, or for which a copy thereof is attached.

4. From: _____ To: _____

The document was recorded in the United States Patent and Trademark Office at

Reel _____, Frame _____, or for which a copy thereof is attached.

5. From: _____ To: _____

The document was recorded in the United States Patent and Trademark Office at

Reel _____, Frame _____, or for which a copy thereof is attached.

6. From: _____ To: _____

The document was recorded in the United States Patent and Trademark Office at

Reel _____, Frame _____, or for which a copy thereof is attached.

☐ Additional documents in the chain of title are listed on a supplemental sheet(s).

☑ As required by 37 CFR 3.73(c)(1)(i), the documentary evidence of the chain of title from the original owner to the assignee was, or concurrently is being, submitted for recordation pursuant to 37 CFR 3.11.

[NOTE: A separate copy (i.e., a true copy of the original assignment document(s)) must be submitted to Assignment Division in accordance with 37 CFR Part 3, to record the assignment in the records of the USPTO. See MPEP 302.08]

The undersigned (whose title is supplied below) is authorized to act on behalf of the assignee.

/Jackson Ho/	05/11/2023
Signature	Date
Jackson Ho	72,360
Printed or Typed Name	Title or Registration Number

Privacy Act Statement

The **Privacy Act of 1974 (P.L. 93-579)** requires that you be given certain information in connection with your submission of the attached form related to a patent application or patent. Accordingly, pursuant to the requirements of the Act, please be advised that: (1) the general authority for the collection of this information is 35 U.S.C. 2(b)(2); (2) furnishing of the information solicited is voluntary; and (3) the principal purpose for which the information is used by the U.S. Patent and Trademark Office is to process and/or examine your submission related to a patent application or patent. If you do not furnish the requested information, the U.S. Patent and Trademark Office may not be able to process and/or examine your submission, which may result in termination of proceedings or abandonment of the application or expiration of the patent.

The information provided by you in this form will be subject to the following routine uses:

1. The information on this form will be treated confidentially to the extent allowed under the Freedom of Information Act (5 U.S.C. 552) and the Privacy Act (5 U.S.C 552a). Records from this system of records may be disclosed to the Department of Justice to determine whether disclosure of these records is required by the Freedom of Information Act.
2. A record from this system of records may be disclosed, as a routine use, in the course of presenting evidence to a court, magistrate, or administrative tribunal, including disclosures to opposing counsel in the course of settlement negotiations.
3. A record in this system of records may be disclosed, as a routine use, to a Member of Congress submitting a request involving an individual, to whom the record pertains, when the individual has requested assistance from the Member with respect to the subject matter of the record.
4. A record in this system of records may be disclosed, as a routine use, to a contractor of the Agency having need for the information in order to perform a contract. Recipients of information shall be required to comply with the requirements of the Privacy Act of 1974, as amended, pursuant to 5 U.S.C. 552a(m).
5. A record related to an International Application filed under the Patent Cooperation Treaty in this system of records may be disclosed, as a routine use, to the International Bureau of the World Intellectual Property Organization, pursuant to the Patent Cooperation Treaty.
6. A record in this system of records may be disclosed, as a routine use, to another federal agency for purposes of National Security review (35 U.S.C. 181) and for review pursuant to the Atomic Energy Act (42 U.S.C. 218(c)).
7. A record from this system of records may be disclosed, as a routine use, to the Administrator, General Services, or his/her designee, during an inspection of records conducted by GSA as part of that agency's responsibility to recommend improvements in records management practices and programs, under authority of 44 U.S.C. 2904 and 2906. Such disclosure shall be made in accordance with the GSA regulations governing inspection of records for this purpose, and any other relevant (*i.e.*, GSA or Commerce) directive. Such disclosure shall not be used to make determinations about individuals.
8. A record from this system of records may be disclosed, as a routine use, to the public after either publication of the application pursuant to 35 U.S.C. 122(b) or issuance of a patent pursuant to 35 U.S.C. 151. Further, a record may be disclosed, subject to the limitations of 37 CFR 1.14, as a routine use, to the public if the record was filed in an application which became abandoned or in which the proceedings were terminated and which application is referenced by either a published application, an application open to public inspection or an issued patent.
9. A record from this system of records may be disclosed, as a routine use, to a Federal, State, or local law enforcement agency, if the USPTO becomes aware of a violation or potential violation of law or regulation.

UNITED STATES PATENT AND TRADEMARK OFFICE

UNITED STATES DEPARTMENT OF COMMERCE
United States Patent and Trademark Office
Address: COMMISSIONER FOR PATENTS
P.O. Box 1450
Alexandria, Virginia 22313-1450
www.uspto.gov

APPLICATION NUMBER	FILING OR 371(C) DATE	FIRST NAMED APPLICANT	ATTY. DOCKET NO./TITLE
13/495,577	06/13/2012	Peter John COUSINS	S0123US1

CONFIRMATION NO. 3380

POA ACCEPTANCE LETTER

OC000000057538908

188295
Schmidt Patent Law, Inc.
2635 N. First Street
Suite 150
San Jose, CA 95134-2000

Date Mailed: 05/26/2023

NOTICE OF ACCEPTANCE OF POWER OF ATTORNEY

This is in response to the Power of Attorney filed 05/11/2023.

The Power of Attorney in this application is accepted. Correspondence in this application will be mailed to the above address as provided by 37 CFR 1.33.

Questions about the contents of this notice and the requirements it sets forth should be directed to the Office of Data Management, Application Assistance Unit, at **(571) 272-4000** or **(571) 272-4200** or **1-888-786-0101**.

/zabraha/

UNITED STATES PATENT AND TRADEMARK OFFICE

UNITED STATES DEPARTMENT OF COMMERCE
United States Patent and Trademark Office
Address: COMMISSIONER FOR PATENTS
P.O. Box 1450
Alexandria, Virginia 22313-1450
www.uspto.gov

APPLICATION NUMBER	FILING OR 371(C) DATE	FIRST NAMED APPLICANT	ATTY. DOCKET NO./TITLE
13/495,577	06/13/2012	Peter John COUSINS	S0123US1

CONFIRMATION NO. 3380

POWER OF ATTORNEY NOTICE

OC000000057538852

144187
Schmidt Patent Law, Inc.
2635 N. First Street
Suite 150
San Jose, CA 95134-2000

Date Mailed: 05/26/2023

NOTICE REGARDING CHANGE OF POWER OF ATTORNEY

This is in response to the Power of Attorney filed 05/11/2023.

- The Power of Attorney to you in this application has been revoked by the assignee who has intervened as provided by 37 CFR 3.71. Future correspondence will be mailed to the new address of record(37 CFR 1.33).

Questions about the contents of this notice and the requirements it sets forth should be directed to the Office of Data Management, Application Assistance Unit, at **(571) 272-4000** or **(571) 272-4200** or **1-888-786-0101**.

/zabraha/