PTO/AIA/80 (07-12)
Approved for use through 11/30/2014. OMB 0651-0035
U.S. Patent and Trademark Office; U.S. DEPARTMENT OF COMMERCE
Under the Paperwork Reduction Act of 1995, no persons are required to respond to a collection of information unless it displays a valid OMB control number.

POWER OF ATTORNEY TO PROSECUTE APPLICATIONS BEFORE THE USPTO

I hereby revoke all previous powers of attorney given in the application identified in the attached statement under 37 CFR 3.73(c).

I hereby appoint:

■ Practitioners associated with Customer Number: 144187

OR

☐ Practitioner(s) named below (if more than ten patent practitioners are to be named, then a customer number must be used):

Name	Registration Number	Name	Registration Number

As attorney(s) or agent(s) to represent the undersigned before the United States Patent and Trademark Office (USPTO) in connection with any and all patent applications assigned only to the undersigned according to the USPTO assignment records or assignments documents attached to this form in accordance with 37 CFR 3.73(c).

Please change the correspondence address for the application identified in the attached statement under 37 CFR 3.73(c) to:

■ The address associated with Customer Number: 144187

OR

☐ Firm or Individual Name			
Address			
City		State	Zip
Country			
Telephone		Email	

Assignee Name and Address: SunPower Corporation
51 Rio Robles
San Jose, CA 95134

A copy of this form, together with a statement under 37 CFR 3.73(c) (Form PTO/AIA/96 or equivalent) is required to be Filed in each application in which this form is used. The statement under 37 CFR 3.73(c) may be completed by one of The practitioners appointed in this form, and must identify the application in which this Power of Attorney is to be filed.

SIGNATURE of Assignee of Record

The individual whose signature and title is supplied below is authorized to act on behalf of the assignee

Signature		Date	27-Feb-2017
Name	Marc Robinson	Telephone	512.735.5911
Title	Senior IP Counsel		

This collection of information is required by 37 CFR 1.31, 1.32 and 1.33. The information is required to obtain or retain a benefit by the public which is to file (and by the USPTO to process) an application. Confidentiality is governed by 35 U.S.C. 122 and 37 CFR 1.11 and 1.14. This collection is estimated to take 3 minutes to complete, including gathering, preparing, and submitting the completed application form to the USPTO. Time will vary depending upon the individual case. Any comments on the amount of time you require to complete this form and/or suggestions for reducing this burden, should be sent to the Chief Information Officer, U.S. Patent and Trademark Office, U.S. Department of Commerce, P.O. Box 1450, Alexandria, VA 22313-1450. DO NOT SEND FEES OR COMPLETED FORMS TO THIS ADDRESS. **SEND TO: Commissioner for Patents, P.O. Box 1450, Alexandria, VA 22313-1450.**

If you need assistance in completing the form, call 1-800-PTO-9199 and select option 2.

Maxeon EX2013
CSI v. Maxeon
IPR2024-01039

Under the Paperwork Reduction Act of 1995, no persons are required to respond to a collection of information unless it contains a valid OMB control number.

Application Data Sheet 37 CFR 1.76	Attorney Docket Number	SKYW00056-1C US
	Application Number	
Title of Invention	FRONT CONTACT SOLAR CELL WITH FORMED EMITTER	

The application data sheet is part of the provisional or nonprovisional application for which it is being submitted. The following form contains the bibliographic data arranged in a format specified by the United States Patent and Trademark Office as outlined in 37 CFR 1.76.
This document may be completed electronically and submitted to the Office in electronic format using the Electronic Filing System (EFS) or the document may be printed and included in a paper filed application.

Secrecy Order 37 CFR 5.2:

☐ Portions or all of the application associated with this Application Data Sheet may fall under a Secrecy Order pursuant to 37 CFR 5.2 (Paper filers only. Applications that fall under Secrecy Order may not be filed electronically.)

Inventor Information:

Inventor 1 Remove

Legal Name

Prefix	Given Name	Middle Name	Family Name	Suffix
	Peter	John	COUSINS	

Residence Information (Select One) ● US Residency Non US Residency Active US Military Service

City	Menlo Park	State/Province	CA	Country of Residence i	US

Mailing Address of Inventor:

Address 1	c/o SunPower Corporation		
Address 2	51 Rio Robles		
City	San Jose	State/Province	CA
Postal Code	95134	Country i	US

All Inventors Must Be Listed - Additional Inventor Information blocks may be generated within this form by selecting the **Add** button. Add

Correspondence Information:

Enter either Customer Number or complete the Correspondence Information section below.
For further information see 37 CFR 1.33(a).

☐ **An Address is being provided for the correspondence Information of this application.**

Customer Number	144187		
Email Address		Add Email	Remove Email

Application Information:

Title of the Invention	FRONT CONTACT SOLAR CELL WITH FORMED EMITTER		
Attorney Docket Number	SKYW00056-1C US	Small Entity Status Claimed	☐
Application Type	Nonprovisional		
Subject Matter	Utility		
Total Number of Drawing Sheets (if any)	7	Suggested Figure for Publication (if any)	1

Under the Paperwork Reduction Act of 1995, no persons are required to respond to a collection of information unless it contains a valid OMB control number.

Application Data Sheet 37 CFR 1.76	Attorney Docket Number	SKYW00056-1C US
	Application Number	
Title of Invention	FRONT CONTACT SOLAR CELL WITH FORMED EMITTER	

Filing By Reference:

Only complete this section when filing an application by reference under 35 U.S.C. 111(c) and 37 CFR 1.57(a). Do not complete this section if application papers including a specification and any drawings are being filed. Any domestic benefit or foreign priority information must be provided in the appropriate section(s) below (i.e., "Domestic Benefit/National Stage Information" and "Foreign Priority Information").

For the purposes of a filing date under 37 CFR 1.53(b), the description and any drawings of the present application are replaced by this reference to the previously filed application, subject to conditions and requirements of 37 CFR 1.57(a).

Application number of the previously filed application	Filing date (YYYY-MM-DD)	Intellectual Property Authority or Country

Publication Information:

☐ Request Early Publication (Fee required at time of Request 37 CFR 1.219)

☐ **Request Not to Publish.** I hereby request that the attached application not be published under 35 U.S.C. 122(b) and certify that the invention disclosed in the attached application **has not and will not** be the subject of an application filed in another country, or under a multilateral international agreement, that requires publication at eighteen months after filing.

Representative Information:

Representative information should be provided for all practitioners having a power of attorney in the application. Providing this information in the Application Data Sheet does not constitute a power of attorney in the application (see 37 CFR 1.32).
Either enter Customer Number or complete the Representative Name section below. If both sections are completed the customer Number will be used for the Representative Information during processing.

Please Select One:	● Customer Number	US Patent Practitioner	◯ Limited Recognition (37 CFR 11.9)
Customer Number	144187		

Domestic Benefit/National Stage Information:

This section allows for the applicant to either claim benefit under 35 U.S.C. 119(e), 120, 121, 365(c), or 386(c) or indicate National Stage entry from a PCT application. Providing benefit claim information in the Application Data Sheet constitutes the specific reference required by 35 U.S.C. 119(e) or 120, and 37 CFR 1.78.
When referring to the current application, please leave the "Application Number" field blank.

Prior Application Status	Pending		Remove
Application Number	Continuity Type	Prior Application Number	Filing or 371(c) Date (YYYY-MM-DD)
	Continuation of	16460035	2019-07-02

Under the Paperwork Reduction Act of 1995, no persons are required to respond to a collection of information unless it contains a valid OMB control number.

Application Data Sheet 37 CFR 1.76	Attorney Docket Number	SKYW00056-1C US
	Application Number	
Title of Invention	FRONT CONTACT SOLAR CELL WITH FORMED EMITTER	

Prior Application Status	Abandoned		Remove
Application Number	Continuity Type	Prior Application Number	Filing or 371(c) Date (YYYY-MM-DD)
16460035	Continuation of	14504771	2014-10-02

Prior Application Status	Patented				Remove
Application Number	Continuity Type	Prior Application Number	Filing Date (YYYY-MM-DD)	Patent Number	Issue Date (YYYY-MM-DD)
14504771	Continuation of	13495577	2012-06-13	8878053	2014-11-04

Prior Application Status	Patented				Remove
Application Number	Continuity Type	Prior Application Number	Filing Date (YYYY-MM-DD)	Patent Number	Issue Date (YYYY-MM-DD)
13495577	Division of	12070742	2008-02-20	8222516	2012-07-17

Additional Domestic Benefit/National Stage Data may be generated within this form by selecting the **Add** button. Add

Foreign Priority Information:

This section allows for the applicant to claim priority to a foreign application. Providing this information in the application data sheet constitutes the claim for priority as required by 35 U.S.C. 119(b) and 37 CFR 1.55. When priority is claimed to a foreign application that is eligible for retrieval under the priority document exchange program (PDX)[i] the information will be used by the Office to automatically attempt retrieval pursuant to 37 CFR 1.55(i)(1) and (2). Under the PDX program, applicant bears the ultimate responsibility for ensuring that a copy of the foreign application is received by the Office from the participating foreign intellectual property office, or a certified copy of the foreign priority application is filed, within the time period specified in 37 CFR 1.55(g)(1).

Remove

Application Number	Country[i]	Filing Date (YYYY-MM-DD)	Access Code[i] (if applicable)

Additional Foreign Priority Data may be generated within this form by selecting the **Add** button. Add

Statement under 37 CFR 1.55 or 1.78 for AIA (First Inventor to File) Transition Applications

☐ This application (1) claims priority to or the benefit of an application filed before March 16, 2013 and (2) also contains, or contained at any time, a claim to a claimed invention that has an effective filing date on or after March 16, 2013.
NOTE: By providing this statement under 37 CFR 1.55 or 1.78, this application, with a filing date on or after March 16, 2013, will be examined under the first inventor to file provisions of the AIA.

Application Data Sheet 37 CFR 1.76	Attorney Docket Number	SKYW00056-1C US
	Application Number	
Title of Invention	FRONT CONTACT SOLAR CELL WITH FORMED EMITTER	

Authorization or Opt-Out of Authorization to Permit Access:

When this Application Data Sheet is properly signed and filed with the application, applicant has provided written authority to permit a participating foreign intellectual property (IP) office access to the instant application-as-filed (see paragraph A in subsection 1 below) and the European Patent Office (EPO) access to any search results from the instant application (see paragraph B in subsection 1 below).

Should applicant choose not to provide an authorization identified in subsection 1 below, applicant **must opt-out** of the authorization by checking the corresponding box A or B or both in subsection 2 below.

NOTE: This section of the Application Data Sheet is **ONLY** reviewed and processed with the **INITIAL** filing of an application. After the initial filing of an application, an Application Data Sheet cannot be used to provide or rescind authorization for access by a foreign IP office(s). Instead, Form PTO/SB/39 or PTO/SB/69 must be used as appropriate.

1. Authorization to Permit Access by a Foreign Intellectual Property Office(s)

A. Priority Document Exchange (PDX) - Unless box A in subsection 2 (opt-out of authorization) is checked, the undersigned hereby **grants the USPTO authority** to provide the European Patent Office (EPO), the Japan Patent Office (JPO), the Korean Intellectual Property Office (KIPO), the State Intellectual Property Office of the People's Republic of China (SIPO), the World Intellectual Property Organization (WIPO), and any other foreign intellectual property office participating with the USPTO in a bilateral or multilateral priority document exchange agreement in which a foreign application claiming priority to the instant patent application is filed, access to: (1) the instant patent application-as-filed and its related bibliographic data, (2) any foreign or domestic application to which priority or benefit is claimed by the instant application and its related bibliographic data, and (3) the date of filing of this Authorization. See 37 CFR 1.14(h)(1).

B. Search Results from U.S. Application to EPO - Unless box B in subsection 2 (opt-out of authorization) is checked, the undersigned hereby **grants the USPTO authority** to provide the EPO access to the bibliographic data and search results from the instant patent application when a European patent application claiming priority to the instant patent application is filed. See 37 CFR 1.14(h)(2).

The applicant is reminded that the EPO's Rule 141(1) EPC (European Patent Convention) requires applicants to submit a copy of search results from the instant application without delay in a European patent application that claims priority to the instant application.

2. Opt-Out of Authorizations to Permit Access by a Foreign Intellectual Property Office(s)

☐ A. Applicant **DOES NOT** authorize the USPTO to permit a participating foreign IP office access to the instant application-as-filed. If this box is checked, the USPTO will not be providing a participating foreign IP office with any documents and information identified in subsection 1A above.

☐ B. Applicant **DOES NOT** authorize the USPTO to transmit to the EPO any search results from the instant patent application. If this box is checked, the USPTO will not be providing the EPO with search results from the instant application.

NOTE: Once the application has published or is otherwise publicly available, the USPTO may provide access to the application in accordance with 37 CFR 1.14.

Under the Paperwork Reduction Act of 1995, no persons are required to respond to a collection of information unless it contains a valid OMB control number.

Application Data Sheet 37 CFR 1.76	Attorney Docket Number	SKYW00056-1C US
	Application Number	
Title of Invention	FRONT CONTACT SOLAR CELL WITH FORMED EMITTER	

Applicant Information:

Providing assignment information in this section does not substitute for compliance with any requirement of part 3 of Title 37 of CFR to have an assignment recorded by the Office.

Applicant 1 Remove

If the applicant is the inventor (or the remaining joint inventor or inventors under 37 CFR 1.45), this section should not be completed. The information to be provided in this section is the name and address of the legal representative who is the applicant under 37 CFR 1.43; or the name and address of the assignee, person to whom the inventor is under an obligation to assign the invention, or person who otherwise shows sufficient proprietary interest in the matter who is the applicant under 37 CFR 1.46. If the applicant is an applicant under 37 CFR 1.46 (assignee, person to whom the inventor is obligated to assign, or person who otherwise shows sufficient proprietary interest) together with one or more joint inventors, then the joint inventor or inventors who are also the applicant should be identified in this section. Clear

● Assignee	Legal Representative under 35 U.S.C. 117	Joint Inventor
Person to whom the inventor is obligated to assign.	Person who shows sufficient proprietary interest	

If applicant is the legal representative, indicate the authority to file the patent application, the inventor is:

Name of the Deceased or Legally Incapacitated Inventor:

If the Applicant is an Organization check here. ☒

Organization Name	SunPower Corporation		
Mailing Address Information For Applicant:			
Address 1	51 Rio Robles		
Address 2			
City	San Jose	**State/Province**	CA
Country	US	Postal Code	95134
Phone Number		Fax Number	
Email Address			

Additional Applicant Data may be generated within this form by selecting the Add button. Add

Assignee Information including Non-Applicant Assignee Information:

Providing assignment information in this section does not substitute for compliance with any requirement of part 3 of Title 37 of CFR to have an assignment recorded by the Office.

Under the Paperwork Reduction Act of 1995, no persons are required to respond to a collection of information unless it contains a valid OMB control number.

Application Data Sheet 37 CFR 1.76	Attorney Docket Number	SKYW00056-1C US
	Application Number	
Title of Invention	FRONT CONTACT SOLAR CELL WITH FORMED EMITTER	

Assignee 1

Complete this section if assignee information, including non-applicant assignee information, is desired to be included on the patent application publication. An assignee-applicant identified in the "Applicant Information" section will appear on the patent application publication as an applicant. For an assignee-applicant, complete this section only if identification as an assignee is also desired on the patent application publication.

Remove

If the Assignee or Non-Applicant Assignee is an Organization check here. ☒

Organization Name	SunPower Corporation

Mailing Address Information For Assignee including Non-Applicant Assignee:

Address 1	51 Rio Robles		
Address 2			
City	San Jose	**State/Province**	CA
Country i	US	Postal Code	95134
Phone Number		Fax Number	
Email Address			

Additional Assignee or Non-Applicant Assignee Data may be generated within this form by selecting the Add button. Add

Signature:

Remove

NOTE: This Application Data Sheet must be signed in accordance with 37 CFR 1.33(b). **However, if this Application Data Sheet is submitted with the INITIAL filing of the application and either box A or B is not checked in subsection 2 of the "Authorization or Opt-Out of Authorization to Permit Access" section, then this form must also be signed in accordance with 37 CFR 1.14(c).**

This Application Data Sheet **must** be signed by a patent practitioner if one or more of the applicants is a **juristic entity** (e.g., corporation or association). If the applicant is two or more joint inventors, this form must be signed by a patent practitioner, **all** joint inventors who are the applicant, or one or more joint inventor-applicants who have been given power of attorney (e.g., see USPTO Form PTO/AIA/81) on behalf of **all** joint inventor-applicants.

See 37 CFR 1.4(d) for the manner of making signatures and certifications.

Signature	/Jackson Ho/			Date (YYYY-MM-DD)	2022-07-21
First Name	Jackson	Last Name	Ho	Registration Number	72,360

Additional Signature may be generated within this form by selecting the Add button. Add

Application Data Sheet 37 CFR 1.76	Attorney Docket Number	SKYW00056-1C US
	Application Number	
Title of Invention	FRONT CONTACT SOLAR CELL WITH FORMED EMITTER	

This collection of information is required by 37 CFR 1.76. The information is required to obtain or retain a benefit by the public which is to file (and by the USPTO to process) an application. Confidentiality is governed by 35 U.S.C. 122 and 37 CFR 1.14. This collection is estimated to take 23 minutes to complete, including gathering, preparing, and submitting the completed application data sheet form to the USPTO. Time will vary depending upon the individual case. Any comments on the amount of time you require to complete this form and/or suggestions for reducing this burden, should be sent to the Chief Information Officer, U.S. Patent and Trademark Office, U.S. Department of Commerce, P.O. Box 1450, Alexandria, VA 22313-1450. DO NOT SEND FEES OR COMPLETED FORMS TO THIS ADDRESS. **SEND TO: Commissioner for Patents, P.O. Box 1450, Alexandria, VA 22313-1450.**

Privacy Act Statement

The Privacy Act of 1974 (P.L. 93-579) requires that you be given certain information in connection with your submission of the attached form related to a patent application or patent. Accordingly, pursuant to the requirements of the Act, please be advised that: (1) the general authority for the collection of this information is 35 U.S.C. 2(b)(2); (2) furnishing of the information solicited is voluntary; and (3) the principal purpose for which the information is used by the U.S. Patent and Trademark Office is to process and/or examine your submission related to a patent application or patent. If you do not furnish the requested information, the U.S. Patent and Trademark Office may not be able to process and/or examine your submission, which may result in termination of proceedings or abandonment of the application or expiration of the patent.

The information provided by you in this form will be subject to the following routine uses:

1 The information on this form will be treated confidentially to the extent allowed under the Freedom of Information Act (5 U.S.C. 552) and the Privacy Act (5 U.S.C. 552a). Records from this system of records may be disclosed to the Department of Justice to determine whether the Freedom of Information Act requires disclosure of these records.

2. A record from this system of records may be disclosed, as a routine use, in the course of presenting evidence to a court, magistrate, or administrative tribunal, including disclosures to opposing counsel in the course of settlement negotiations.

3 A record in this system of records may be disclosed, as a routine use, to a Member of Congress submitting a request involving an individual, to whom the record pertains, when the individual has requested assistance from the Member with respect to the subject matter of the record.

4. A record in this system of records may be disclosed, as a routine use, to a contractor of the Agency having need for the information in order to perform a contract. Recipients of information shall be required to comply with the requirements of the Privacy Act of 1974, as amended, pursuant to 5 U.S.C. 552a(m).

5. A record related to an International Application filed under the Patent Cooperation Treaty in this system of records may be disclosed, as a routine use, to the International Bureau of the World Intellectual Property Organization, pursuant to the Patent CooperationTreaty.

6. A record in this system of records may be disclosed, as a routine use, to another federal agency for purposes of National Security review (35 U.S.C. 181) and for review pursuant to the Atomic Energy Act (42 U.S.C. 218(c)).

7. A record from this system of records may be disclosed, as a routine use, to the Administrator, General Services, or his/her designee, during an inspection of records conducted by GSA as part of that agency's responsibility to recommend improvements in records management practices and programs, under authority of 44 U.S.C. 2904 and 2906. Such disclosure shall be made in accordance with the GSA regulations governing inspection of records for this purpose, and any other relevant (i.e., GSA or Commerce) directive. Such disclosure shall not be used to make determinations about individuals.

8. A record from this system of records may be disclosed, as a routine use, to the public after either publication of the application pursuant to 35 U.S.C. 122(b) or issuance of a patent pursuant to 35 U.S.C. 151. Further, a record may be disclosed, subject to the limitations of 37 CFR 1.14, as a routine use, to the public if the record was filed in an application which became abandoned or in which the proceedings were terminated and which application is referenced by either a published application, an application open to public inspections or an issued patent.

9. A record from this system of records may be disclosed, as a routine use, to a Federal, State, or local law enforcement agency, if the USPTO becomes aware of a violation or potential violation of law or regulation.

Electronic Acknowledgement Receipt

EFS ID:	46243464
Application Number:	17870268
International Application Number:	
Confirmation Number:	1086
Title of Invention:	FRONT CONTACT SOLAR CELL WITH FORMED EMITTER
First Named Inventor/Applicant Name:	Peter John Cousins
Customer Number:	144187
Filer:	Jackson Ho/Julie Fosnaugh
Filer Authorized By:	Jackson Ho
Attorney Docket Number:	SKYW00056-1C US
Receipt Date:	21-JUL-2022
Filing Date:	
Time Stamp:	15:20:45
Application Type:	Utility under 35 USC 111(a)

Payment information:

Submitted with Payment	no

File Listing:

Document Number	Document Description	File Name	File Size(Bytes)/ Message Digest	Multi Part /.zip	Pages (if appl.)
1		S0123US3_SKYW00056_1CUS_APPLN_07212022_EF.pdf	492800 c17c497c85849e2fc01f7f6a0e310b76cbfc0d93	yes	24

	Multipart Description/PDF files in .zip description		
	Document Description	**Start**	**End**
	Specification	1	12
	Claims	13	15
	Abstract	16	16
	Drawings-only black and white line drawings	17	23
	Oath or Declaration filed	24	24

Warnings:					
Information:					
2	Assignee showing of ownership per 37 CFR 3.73	SKYW00056_1CUS_AssnStmt373c_EF.pdf	117590 1bffebb0b349005127e085d79c13644a5902768e	no	3
Warnings:					
Information:					
3	Power of Attorney	SKYW00056_1CUS_POA_EF.pdf	435182 c5fdd4ceacebd32ebd1b0f7c8a069c9c823807cf	no	1
Warnings:					
Information:					
4	Application Data Sheet	SKYW00056_1CUS_ADS_07212022_EF.pdf	2226268 3ffac2abd4d0a04fb836d32101eb58e614345b25	no	8
Warnings:					
Information:					
		Total Files Size (in bytes):	3271840		

This Acknowledgement Receipt evidences receipt on the noted date by the USPTO of the indicated documents, characterized by the applicant, and including page counts, where applicable. It serves as evidence of receipt similar to a Post Card, as described in MPEP 503.

New Applications Under 35 U.S.C. 111
If a new application is being filed and the application includes the necessary components for a filing date (see 37 CFR 1.53(b)-(d) and MPEP 506), a Filing Receipt (37 CFR 1.54) will be issued in due course and the date shown on this Acknowledgement Receipt will establish the filing date of the application.
National Stage of an International Application under 35 U.S.C. 371
If a timely submission to enter the national stage of an international application is compliant with the conditions of 35 U.S.C. 371 and other applicable requirements a Form PCT/DO/EO/903 indicating acceptance of the application as a national stage submission under 35 U.S.C. 371 will be issued in addition to the Filing Receipt, in due course.
New International Application Filed with the USPTO as a Receiving Office
If a new international application is being filed and the international application includes the necessary components for an international filing date (see PCT Article 11 and MPEP 1810), a Notification of the International Application Number and of the International Filing Date (Form PCT/RO/105) will be issued in due course, subject to prescriptions concerning national security, and the date shown on this Acknowledgement Receipt will establish the international filing date of the application.

FRONT CONTACT SOLAR CELL WITH FORMED EMITTER

Inventor: Peter John Cousins

REFERENCE TO RELATED APPLICATIONS

This application is a continuation of U.S. Application No. 16/460,035, filed July 2, 2019, which is a continuation of U.S. Application No. 14/504,771, filed on October 2, 2014, which is a continuation of U.S. Application No. 13/495,577, filed on June 13, 2012, now U.S. Patent No. 8,878,053, which is a divisional of U.S. Application No. 12/070,742, filed on February 20, 2008, now U.S. Patent No. 8,222,516. The just-mentioned disclosures are incorporated herein by reference in their entirety.

BACKGROUND OF THE INVENTION

1. Field of the Invention

The present invention relates generally to solar cells, and more particularly but not exclusively to solar cell fabrication processes and structures.

2. Description of the Background Art

Solar cells are well known devices for converting solar radiation to electrical energy. They may be fabricated on a semiconductor wafer using semiconductor processing technology. A solar cell includes P-type and N-type diffusion regions that form a junction. Solar radiation impinging on the solar cell creates electrons and holes that migrate to the diffusion regions, thereby creating voltage differentials between the

diffusion regions. In a backside contact solar cell, both the diffusion regions and the metal contacts coupled to them are on the backside of the solar cell. The metal contacts allow an external electrical circuit to be coupled to and be powered by the solar cell.

In a front contact solar cell, at least one of the metal contacts making an electrical connection to a diffusion region is on the front side of the solar cell. The front side of the solar cell, which is opposite the backside, faces the sun during normal operation to collect solar radiation. While backside contact solar cells have an aesthetic advantage over front contact solar cells due to the absence of metal contacts on the front side, and are thus preferred for residential applications, aesthetics is not a major requirement for power plants and other applications where power generation is the main concern. Disclosed herein are structures for a relatively efficient and cost-effective front contact solar cell and processes for manufacturing same.

SUMMARY

A bipolar solar cell includes a backside junction formed by an N-type silicon substrate and a P-type polysilicon emitter formed on the backside of the solar cell. An antireflection layer may be formed on a textured front surface of the silicon substrate. A negative polarity metal contact on the front side of the solar cell makes an electrical connection to the substrate, while a positive polarity metal contact on the backside of the solar cell makes an electrical connection to the polysilicon emitter. An external electrical circuit may be connected to the negative and positive metal contacts to be

powered by the solar cell. The positive polarity metal contact may form an infrared reflecting layer with an underlying dielectric layer for increased solar radiation collection.

These and other features of the present invention will be readily apparent to persons of ordinary skill in the art upon reading the entirety of this disclosure, which includes the accompanying drawings and claims.

DESCRIPTION OF THE DRAWINGS

FIG. 1 schematically shows a cross-section of a solar cell in accordance with an embodiment of the present invention.

FIG. 2 is a plan view schematically showing the front side of the solar cell of FIG. 1.

FIG. 3 is a plan view schematically showing the backside of the solar cell of FIG. 1.

FIG. 4, which comprises FIGS. 4A-4M, schematically illustrates the fabrication of the solar cell of FIG. 1 in accordance with an embodiment of the present invention.

The use of the same reference label in different figures indicates the same or like components. The figures are not drawn to scale.

DETAILED DESCRIPTION

In the present disclosure, numerous specific details are provided, such as examples of apparatus, process parameters, materials, process steps, and structures,

to provide a thorough understanding of embodiments of the invention. Persons of ordinary skill in the art will recognize, however, that the invention can be practiced without one or more of the specific details. In other instances, well-known details are not shown or described to avoid obscuring aspects of the invention.

FIG. 1 schematically shows a cross-section of a solar cell 100 in accordance with an embodiment of the present invention. The solar cell 100 has a front side where a metal contact 102 is located and a backside on a same side as the metal contact 110. The front side faces the sun during normal operation to collect solar radiation.

In the example of FIG. 1, the solar cell 100 includes a backside junction formed by a P-type doped polysilicon emitter 108 serving as a P-type diffusion region and an N-type silicon substrate 101 servings as an N-type diffusion region. The N-type silicon substrate 101 may comprise a long lifetime (e.g., 2 to 5ms) N-type silicon wafer and may have a thickness of about 100 to 250 μm as measured from the backside surface to a tip of the textured front side surface of the substrate. The front side surface of the substrate 101 is randomly textured (labeled as 113) and includes N-type doped regions 105 and 106 formed in the substrate. The N-type doped region 105 provides low front surface recombination and improves lateral conductivity whilst not compromising the blue response of the solar cell. The region 106, which may be a phosphorus diffusion, provides low contact resistance and minimizes contact recombination. The region 106 is also referred to as an "N-dot" because, in one embodiment, it forms a dot-shape to minimize the area of heavily diffused regions on the front surface. The N-type doped region 105 may have a sheet resistance of 100 to 500 Ω/sq, whilst the n-type doped region 106 may have a sheet resistance of 10 to 50 Ω/sq.

An antireflective coating (ARC) of silicon nitride layer 103 is formed on the textured front side surface of the substrate 101. The texture front side surface and the silicon nitride layer 103 help improve solar radiation collection efficiency. A passivating oxide 124 may comprise silicon dioxide thermally grown to a thickness of about 10 to 250 Angstroms on the front side surface of the substrate 101.

In one embodiment, the polysilicon emitter 108 is formed on a tunnel oxide layer 107. The polysilicon emitter 108 may be formed by forming a layer of polysilicon using Chemical Vapor Deposition (CVD), such as Low Pressure CVD (LPCVD) or Plasma Enhanced CVD (PECVD), and thermal anneal. The polysilicon emitter 108 may have a sheet resistance of 100 Ω/sq, and a thickness of 1000 to 2000 Angstroms. The tunnel oxide layer 107 may comprise silicon dioxide thermally grown to a thickness of about 10 to 50 Angstroms on the backside surface of the substrate 101. A metal contact 110 electrically connects to the polysilicon emitter 108 through contact holes 123 formed through a dielectric comprising a silicon dioxide layer 109. The metal contact 110 provides a positive polarity terminal to allow an external electrical circuit to be coupled to and be powered by the solar cell 100. The silicon dioxide layer 109 provides electrical isolation and allows the metal contact 110 to serve as an infrared reflecting layer for increased solar radiation collection. In one embodiment, the metal contact 110 comprises silver having a conductance of about 5-25 mΩ.cm and a thickness of about 15-35μm.

On the front side of the solar cell 100, the metal contact 102 electrically connects to the region 106 through a contact hole 120 formed through the silicon nitride layer 103. The metal contact 102 provides a negative polarity terminal to allow an external

electrical circuit to be coupled to and be powered by the solar cell 100. In one embodiment, the metal contact 102 comprises silver having a sheet resistance of about 5mΩ.cm and a thickness of about 15μm. The pitch between adjacent metal contacts 102 may be about 1 to 4 mm. In one embodiment, the metal contacts 102 are spaced at 400 to 1000 μm along each metal contact 102 (see FIG. 2).

In the example of FIG. 1, the edge isolation trench 111 is formed through the silicon dioxide layer 109, the polysilicon emitter 108, and a portion of the substrate 101 to provide edge electrical isolation.

FIG. 2 is a plan view schematically showing the front side of the solar cell 100. In the example of FIG. 2, two bus bars 201 run parallel on the front side of the substrate 101. The contact holes 120, in which the metal contacts 102 are formed, may each have a diameter of about 50 to 200 μm. A plurality of metal contacts 102 is formed perpendicular to the bus bars 201. Each metal contact 102 may have a width of about 60-120μm.

FIG. 3 is a plan view schematically showing the backside of the solar cell 100. In the example of FIG. 3, two bus bars 301, which are electrically coupled to metal contacts 110, run parallel on the backside. In practice, the bus bars 201 and 301 will be electrically connected to corresponding bus bars of adjacent solar cells to form an array of solar cells.

Solar cells have gained wide acceptance among energy consumers as a viable renewable energy source. Still, to be competitive with other energy sources, a solar cell manufacturer must be able to fabricate an efficient solar cell at relatively low cost. With

this goal in mind, a process for manufacturing the solar cell 100 is now discussed with reference to FIGS. 4A-4M.

FIG. 4, which comprises FIGS. 4A-4M, schematically illustrates the fabrication of the solar cell 100 in accordance with an embodiment of the present invention.

In FIG. 4A, an N-type silicon substrate 101 is prepared for processing into a solar cell by undergoing a damage etch step. The substrate 101 is in wafer form in this example, and is thus typically received with damaged surfaces due to the sawing process used by the wafer vendor to slice the substrate 101 from its ingot. The substrate 101 may be about 100 to 200 microns thick as received from the wafer vendor. In one embodiment, the damage etch step involves removal of about 10 to 20 μm from each side of the substrate 101 using a wet etch process comprising potassium hydroxide. The damage etch step may also include cleaning of the substrate 101 to remove metal contamination.

In FIG. 4B, tunnel oxides 402 and 107 are formed on the front and back surfaces, respectively, of the substrate 101. The tunnel oxides 402 and 107 may comprise silicon dioxide thermally grown to a thickness of about 10 to 50 Angstroms on the surfaces of the N-type silicon substrate 101. A layer of polysilicon is then formed on the tunnel oxides 402 and 107 to form the polysilicon layer 401 and the polysilicon emitter 108, respectively. Each of the polysilicon layer 401 and the polysilicon emitter 108 may be formed to a thickness of about 1000 to 2000 Angstroms by CVD.

In FIG. 4C, a P-type dopant source 461 is formed on the polysilicon emitter 108. As its name implies, the P-type dopant source 461 provides a source of P-type dopants for diffusion into the polysilicon emitter 108 in a subsequent dopant drive-in step. A

dielectric capping layer 462 is formed on the P-type dopant source 461 to prevent dopants from escaping from the backside of the solar cell during the drive-in step. In one embodiment, the P-type dopant source comprises BSG (borosilicate glass) deposited to a thickness of about 500 to 1000 Angstroms by atmospheric pressure CVD (APCVD) and has a dopant concentration of 5 to 10% by weight, while the capping layer 462 comprises undoped silicon dioxide formed to a thickness of about 2000 to 3000 Angstroms also by APCVD.

In FIG. 4D, the edge isolation trench 111 is formed near the edge of the substrate 101 on the backside. The trench 111 is relatively shallow (e.g., 10 μm deep into the substrate 101) and provides edge electrical isolation. In one embodiment, the trench 111 is formed by cutting through the capping layer 462, the P-type dopant source 461, the polysilicon emitter 108, the tunnel oxide 107, and into a shallow portion of the substrate 101 using a laser.

In FIG. 4E, exposed regions on the front surface of the substrate 101 is randomly textured to form the textured surface 113. In one embodiment, the front surface of the substrate 101 is textured with random pyramids using a wet etch process comprising potassium hydroxide and isopropyl alcohol.

In FIG. 4F, an N-type dopant source 412 is formed on regions of the textured surface 113 where contact holes 120 (see FIG. 1) will be subsequently formed to allow subsequently formed metal contacts 102 to electrically connect to the substrate 101. As its name implies, the N-type dopant source 412 provides a source of N-type dopants for diffusion into the front side of the substrate 101. In one embodiment, the N-type dopant

source 412 is formed by inkjet printing the dopant material directly onto the substrate 101.

In one embodiment, the N-type dopant source 412 comprises silicon dioxide doped with phosphorus. Only one N-type dopant source 412 is shown in FIG. 4F for clarity of illustration. In practice, there are several dot-shaped N-type dopant sources 412, one for each region where a contact hole 120 is to be formed (see FIG. 2). This allows formation of several dot shaped N-type doped regions 106 (see FIG. 1) after a subsequently performed drive-in step now discussed with reference to FIG. 4G.

In FIG. 4G, a dopant drive-in step is performed to diffuse N-type dopants from the N-type dopant source 412 into the substrate 101 to form the N-type dope region 106, to diffuse P-type dopants from the P-type dopant source 461 to the polysilicon emitter 108, and to diffuse N-type dopants into the front side of the substrate 101 to form the N-type doped region 105. Silicon dioxide layer 109 represents layers 461 and 462 after the drive-in step. The polysilicon emitter 108 also becomes a P-type doped layer after the drive-in step. The N-type doped region 105 may be formed by exposing the sample of FIG. 4G to phosphorus in a diffusion furnace, for example. The use of the N-type dopant source 412 allows for a more controlled and concentrated N-type diffusion to the N-type doped region 106. The thin thermal silicon dioxide layer 124 may be grown on the textured surface 113 during the drive-in process.

The drive-in step to dope the polysilicon emitter 108 on the backside and to form the N-type doped regions 105 and 106 on the front side may be formed in-situ, which in the context of the present disclosure means a single manual (i.e., by fabrication personnel) loading of the substrate 101 in a furnace or other single chamber or multi-

chamber processing tool. In one embodiment, the drive-in step is performed in a diffusion furnace. The preceding sequence of steps leading to the drive-in step allows for in-situ diffusion, which advantageously helps in lowering fabrication cost.

It is to be noted that the step of using an N-type dopant source 412 to diffuse dopants into the N-type doped region 106 may be omitted in some applications. That is, in an alternative process, the formation of the N-type dopant source 412 in FIG. 4F may be omitted. In that case, the N-type doped regions 105 and 106 will be both doped by introduction of an N-type dopant in the diffusion furnace during the drive-in step. All other process steps disclosed herein remain essentially the same.

In FIG. 4H, the antireflective coating of silicon nitride layer 103 is formed over the textured surface 113 after removal of the N-type dopant source 412. Besides being an antireflective coating, the silicon nitride layer 103 also advantageously serves as a dielectric, enabling the selective contacts to be formed on the front surface to reduce front surface recombination. The silicon nitride layer 103 may be formed to a thickness of about 450 Angstroms by PECVD, for example.

In FIG. 4I, a front contact mask 420 is formed on the silicon nitride layer 103 to create a pattern 421 defining the contact holes 120 (see FIG. 1). The mask 420 may comprise an acid resistance organic material, such as a resist, and formed using a printing process, such as screen printing or inkjet printing.

In FIG. 4J, a back contact mask 422 is formed on the silicon dioxide layer 109 to create patterns 423 defining the contact holes 123 (see FIG. 1). Similar to the mask 420, the mask 422 may comprise an organic material formed using a printing process.

In FIG. 4K, contact holes 120 and 123 are formed by removing exposed portions of the silicon nitride layer 103 and the silicon dioxide 109 in a contact etch step. In one embodiment, the contact holes 120 are formed by using a selective etch process that removes exposed portions of the silicon nitride layer 103 and stops on the substrate 101. The same etch process removes exposed portions of the silicon dioxide 109 and stops on the polysilicon emitter 108. In one embodiment, the etch process comprises a BOE (buffered oxide etch).

In FIG. 4L, the metal contact 110 is formed on the silicon dioxide layer 109 to fill the contact holes 123 and make electrical connection to the polysilicon emitter 108. The metal contact 110 may be formed using a printing process. The metal contact 110 may comprise silver, which, together with the silicon dioxide layer 109, makes an excellent backside infrared reflector. Other metals may also be used as a metal contact 110, such as aluminum, for example.

In FIG. 4M, the metal contact 120 is formed on the silicon nitride layer 103 to fill the contact holes 120 and make electrical connection to the substrate 101. The metal contact 120 may comprise silver and formed using a printing process.

Formation of the metal contacts 110 and 102 may be followed by a firing step. The firing step is applicable when using screen printed silver paste as metal contacts, but not when using other processes or metals. The solar cell 100 may then be visually inspected and tested.

While specific embodiments of the present invention have been provided, it is to be understood that these embodiments are for illustration purposes and not limiting.

Many additional embodiments will be apparent to persons of ordinary skill in the art reading this disclosure.

CLAIMS

What is claimed is:

1. A solar cell, comprising:
a substrate;
a first tunnel dielectric disposed over the substrate;
an emitter disposed over the first tunnel dielectric;
a front electrode disposed over a front surface of the substrate; and
a back electrode disposed over a back surface of the substrate.

2. The solar cell of claim 1, wherein the emitter is a polysilicon emitter.

3. The solar cell of claim 1, wherein the substrate is a monocrystalline silicon substrate.

4. The solar cell of claim 1, wherein the first tunnel dielectric is a tunnel oxide.

5. The solar cell of claim 1, wherein the emitter is disposed over the back surface of the substrate.

6. The solar cell of claim 1, further comprising a second tunnel dielectric disposed on an opposite side of the substrate than the first tunnel dielectric.

7. The solar cell of claim 1, wherein the back electrode includes silver.

8. The solar cell of claim 1, further comprising an antireflective layer disposed over the front surface of the substrate.

9. A solar cell, comprising:
a substrate;
an emitter over a back surface of the substrate;

a first dielectric between the emitter and back surface;
a front electrode disposed on a front surface of the solar cell; and
a back electrode disposed on a back surface of the solar cell.

10. The solar cell of claim 9, wherein the emitter is a polysilicon emitter.

11. The solar cell of claim 9, wherein the substrate is a monocrystalline silicon substrate.

12. The solar cell of claim 9, wherein the first dielectric is an oxide.

13. The solar cell of claim 9, further comprising a second dielectric disposed on an opposite side of the substrate than the first dielectric.

14. The solar cell of claim 9, wherein the back electrode includes silver.

15. A method of fabricating a solar cell, the method comprising:
forming a first tunnel dielectric on a front surface of a substrate;
forming a second tunnel dielectric on a back surface of the substrate;
forming an emitter over the first or second tunnel dielectric;
forming a front side electrode on a front surface of the solar cell; and
forming a back side electrode on a back surface of the solar cell.

16. The method of claim 15, wherein said forming the emitter comprises forming a polysilicon emitter.

17. The method of claim 15, wherein said forming the emitter comprises forming a first silicon layer on the second tunnel dielectric.

18. The method of claim 17, further comprising forming a second silicon layer on the first tunnel dielectric.

19. The method of claim 18, wherein forming the first and second silicon layers comprises forming first and second polysilicon layers, respectively.

20. The method of claim 15, wherein said forming the second tunnel dielectric comprises forming an oxide.

ABSTRACT

A bipolar solar cell includes a backside junction formed by an N-type silicon substrate and a P-type polysilicon emitter formed on the backside of the solar cell. An antireflection layer may be formed on a textured front surface of the silicon substrate. A negative polarity metal contact on the front side of the solar cell makes an electrical connection to the substrate, while a positive polarity metal contact on the backside of the solar cell makes an electrical connection to the polysilicon emitter. An external electrical circuit may be connected to the negative and positive metal contacts to be powered by the solar cell. The positive polarity metal contact may form an infrared reflecting layer with an underlying dielectric layer for increased solar radiation collection.

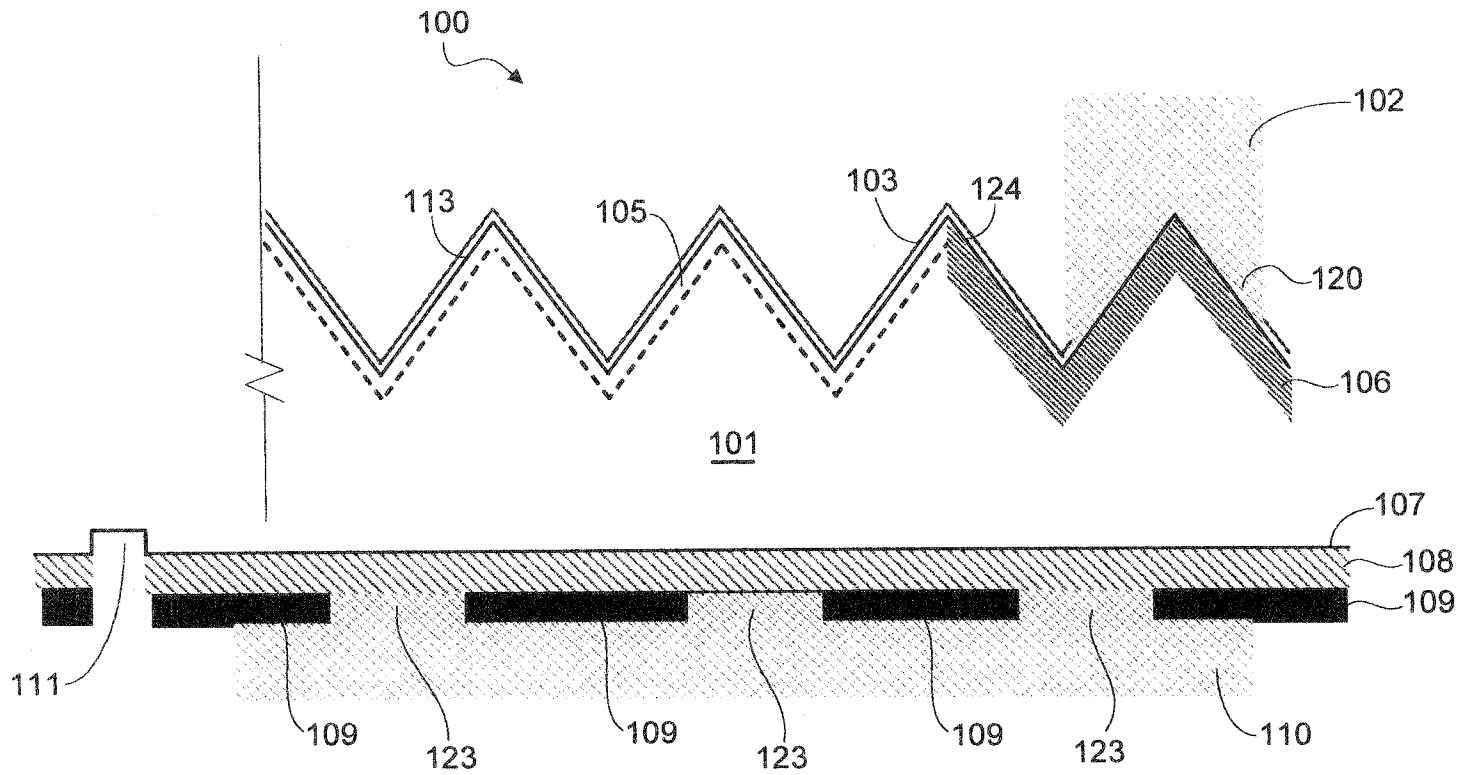
100
102
113
105
103
124
120
106
101
107
108
109
111
109
123
109
123
109
123
110

FIG. 1

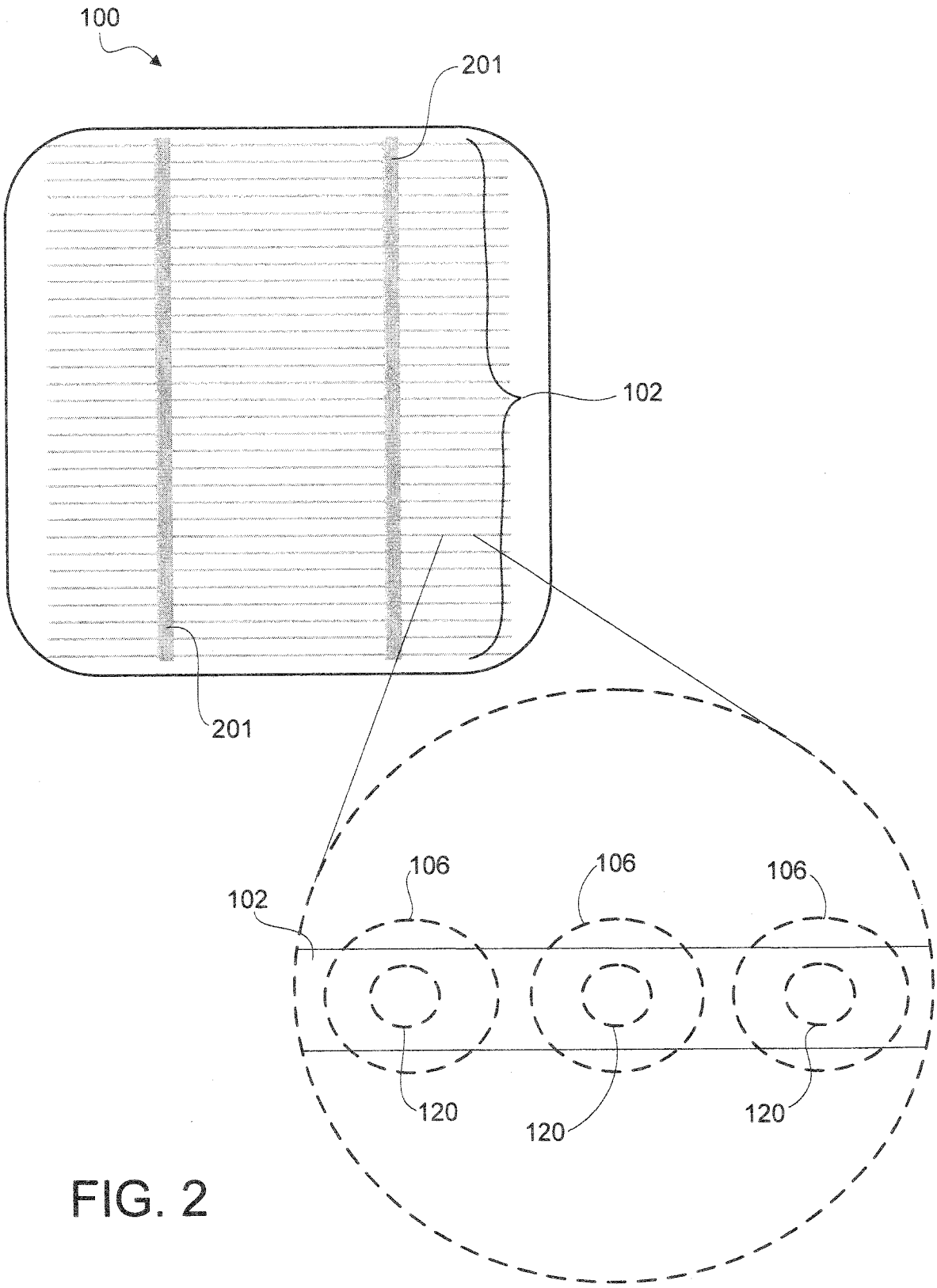

FIG. 2

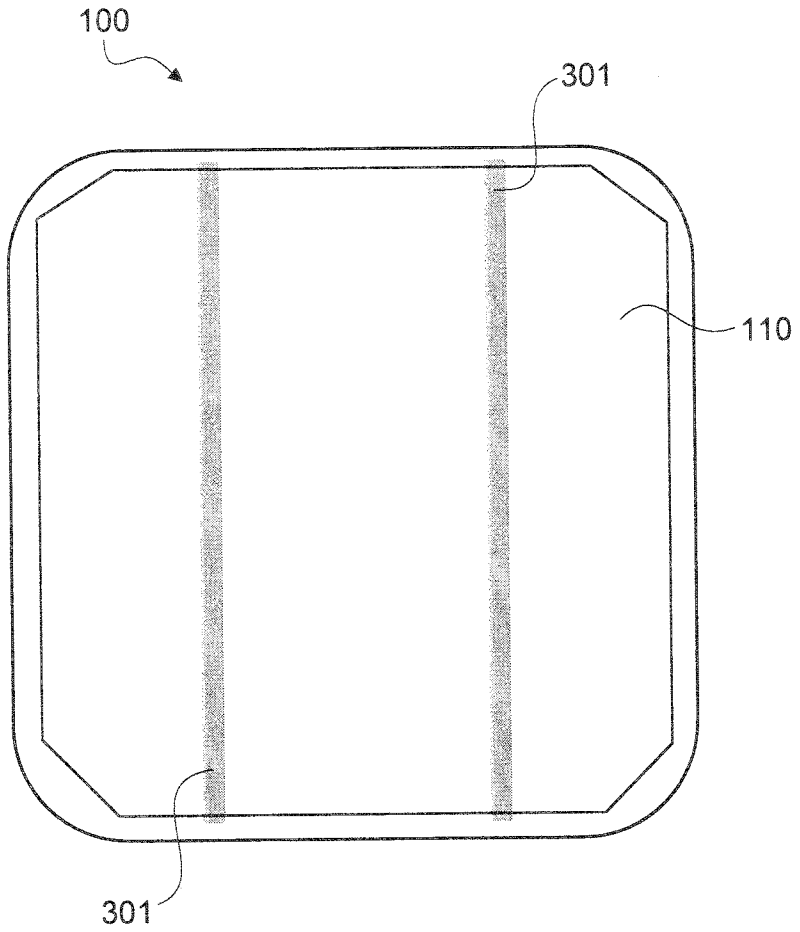

FIG. 3

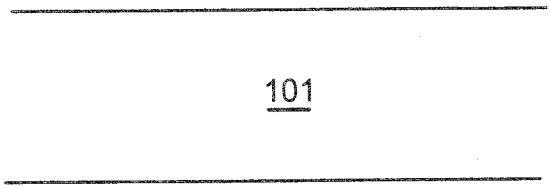

FIG. 4A

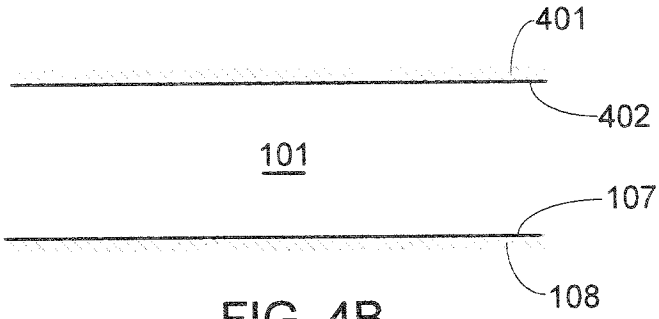

FIG. 4B

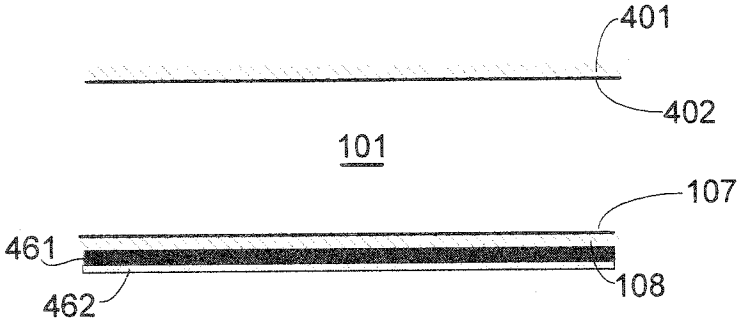

FIG. 4C

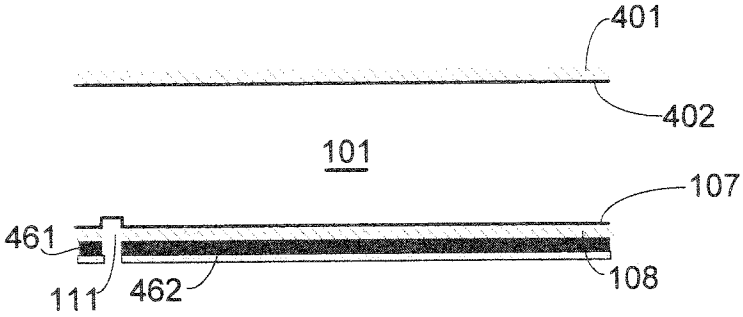

FIG. 4D

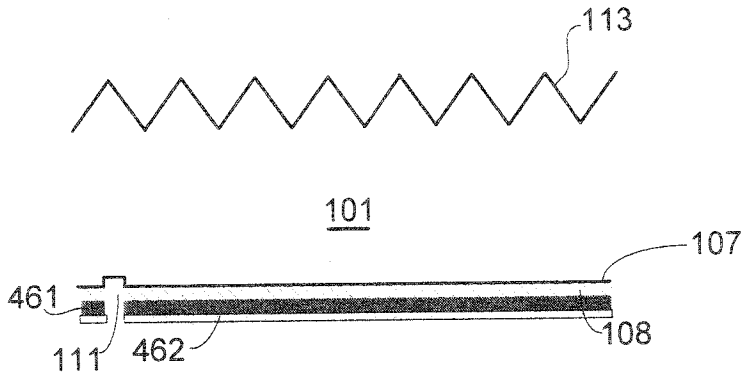

FIG. 4E

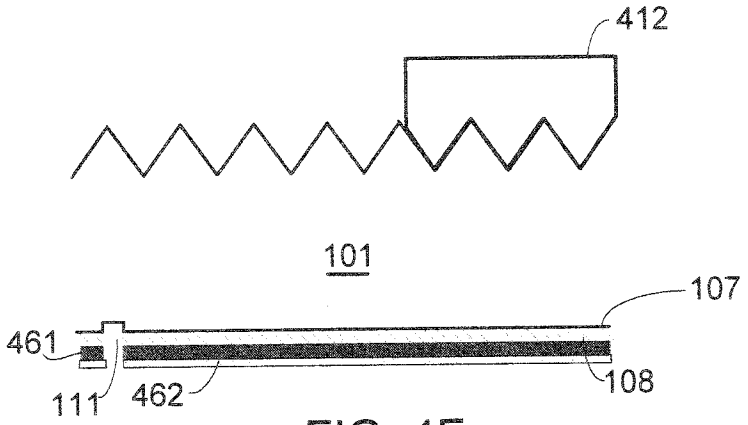

FIG. 4F

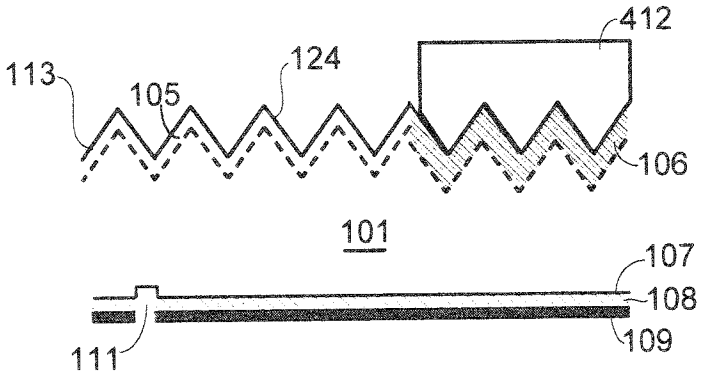

FIG. 4G

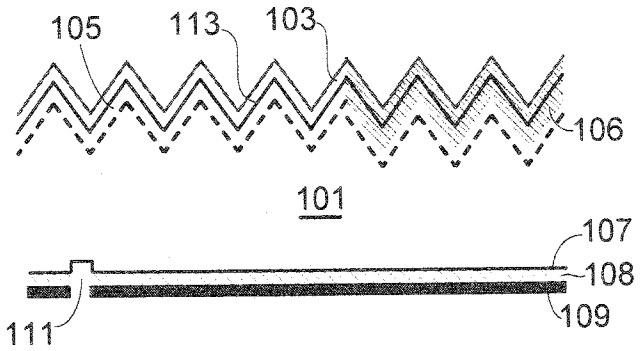

FIG. 4H

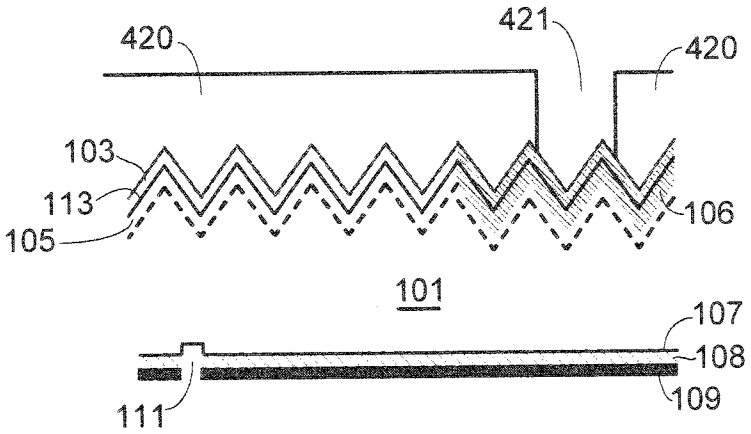

FIG. 4I

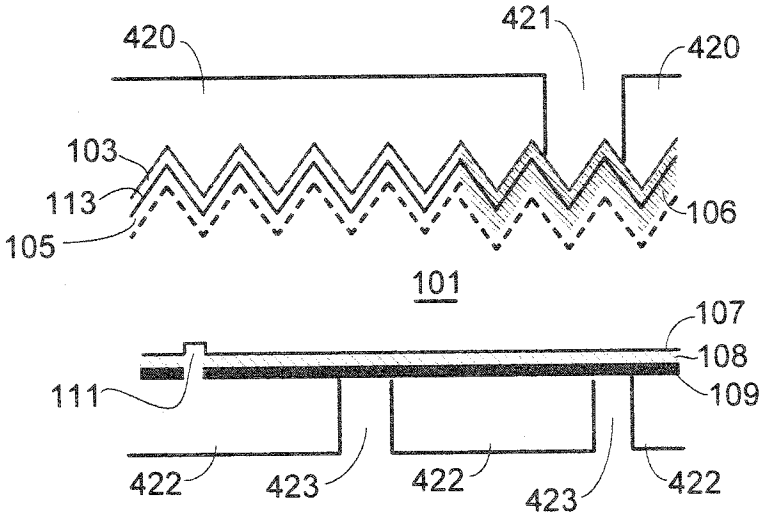

FIG. 4J

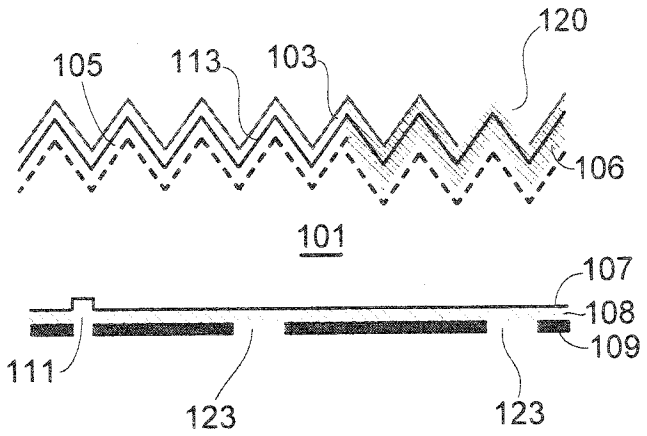

FIG. 4K

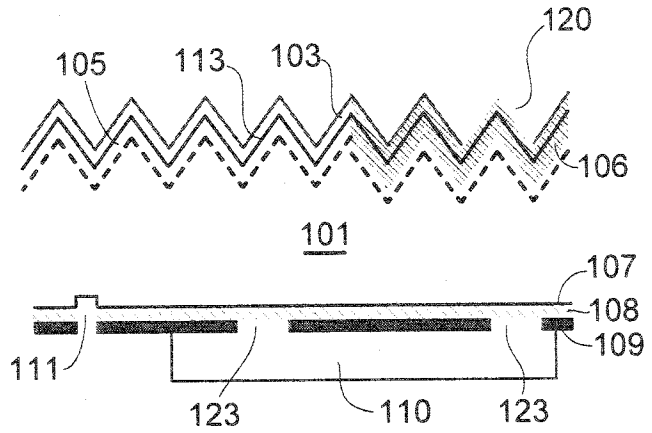

FIG. 4L

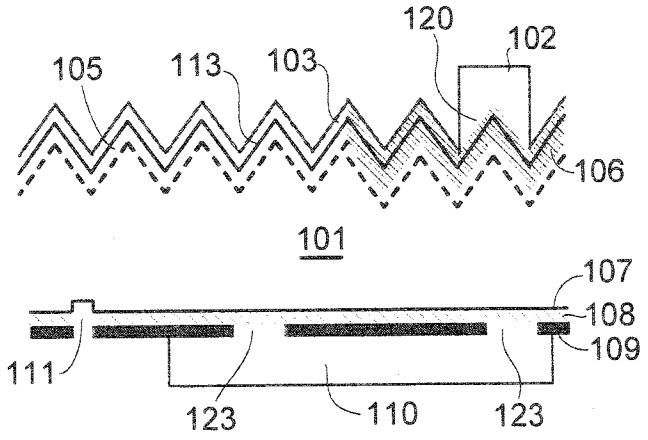

FIG. 4M

PTO/AIA/01 (06-12)
Approved for use through 11/30/2020. OMB 0651-0032
U.S. Patent and Trademark Office; U.S. DEPARTMENT OF COMMERCE
Under the Paperwork Reduction Act of 1995, no persons are required to respond to a collection of information unless it displays a valid OMB control number.

DECLARATION (37 CFR 1.63) FOR UTILITY OR DESIGN APPLICATION USING AN APPLICATION DATA SHEET (37 CFR 1.76)

Title of Invention	FRONT CONTACT SOLAR CELL WITH FORMED EMITTER

As the below named inventor, I hereby declare that:

This declaration is directed to:

☐ The attached application, or

☒ United States application or PCT international application number 16/460,035 filed on 07/02/2019.

The above-identified application was made or authorized to be made by me.

I believe that I am the original inventor or an original joint inventor of a claimed invention in the application.

I hereby acknowledge that any willful false statement made in this declaration is punishable under 18 U.S.C. 1001 by fine or imprisonment of not more than five (5) years, or both.

WARNING:

Petitioner/applicant is cautioned to avoid submitting personal information in documents filed in a patent application that may contribute to identity theft. Personal information such as social security numbers, bank account numbers, or credit card numbers (other than a check or credit card authorization form PTO-2038 submitted for payment purposes) is never required by the USPTO to support a petition or an application. If this type of personal information is included in documents submitted to the USPTO, petitioners/applicants should consider redacting such personal information from the documents before submitting them to the USPTO. Petitioner/applicant is advised that the record of a patent application is available to the public after publication of the application (unless a non-publication request in compliance with 37 CFR 1.213(a) is made in the application) or issuance of a patent. Furthermore, the record from an abandoned application may also be available to the public if the application is referenced in a published application or an issued patent (see 37 CFR 1.14). Checks and credit card authorization forms PTO-2038 submitted for payment purposes are not retained in the application file and therefore are not publicly available.

LEGAL NAME OF INVENTOR

Inventor: Peter John COUSINS Date (Optional): 19th SEP 2019

Signature: [signature]

Note: An application data sheet (PTO/SB/14 or equivalent), including naming the entire inventive entity, must accompany this form or must have been previously filed. Use an additional PTO/AIA/01 form for each additional inventor.

This collection of information is required by 35 U.S.C. 115 and 37 CFR 1.63. The information is required to obtain or retain a benefit by the public which is to file (and by the USPTO to process) an application. Confidentiality is governed by 35 U.S.C. 122 and 37 CFR 1.11 and 1.14. This collection is estimated to take 1 minute to complete, including gathering, preparing, and submitting the completed application form to the USPTO. Time will vary depending upon the individual case. Any comments on the amount of time you require to complete this form and/or suggestions for reducing this burden, should be sent to the Chief Information Officer, U.S. Patent and Trademark Office, U.S. Department of Commerce, P.O. Box 1450, Alexandria, VA 22313-1450. DO NOT SEND FEES OR COMPLETED FORMS TO THIS ADDRESS. **SEND TO: Commissioner for Patents, P.O. Box 1450, Alexandria, VA 22313-1450.**

If you need assistance in completing the form, call 1-800-PTO-9199 and select option 2.

PTO/AIA/96 (08-12)
Approved for use through 11/30/2020. OMB 0651-0031
U.S. Patent and Trademark Office; U.S. DEPARTMENT OF COMMERCE
Under the Paperwork Reduction Act of 1995, no persons are required to respond to a collection of information unless it displays a valid OMB control number.

STATEMENT UNDER 37 CFR 3.73(c)

Applicant/Patent Owner: SUNPOWER CORPORATION

Application No./Patent No.: _____ Filed/Issue Date: herewith

Titled: FRONT CONTACT SOLAR CELL WITH FORMED EMITTER

SUNPOWER CORPORATION, a corporation

(Name of Assignee) (Type of Assignee, e.g., corporation, partnership, university, government agency, etc.)

states that, for the patent application/patent identified above, it is (choose **one** of options 1, 2, 3 or 4 below):

1. ☑ The assignee of the entire right, title, and interest.

2. ☐ An assignee of less than the entire right, title, and interest (check applicable box):

☐ The extent (by percentage) of its ownership interest is _____%. Additional Statement(s) by the owners holding the balance of the interest must be submitted to account for 100% of the ownership interest.

☐ There are unspecified percentages of ownership. The other parties, including inventors, who together own the entire right, title and interest are:

Additional Statement(s) by the owner(s) holding the balance of the interest must be submitted to account for the entire right, title, and interest.

3. ☐ The assignee of an undivided interest in the entirety (a complete assignment from one of the joint inventors was made). The other parties, including inventors, who together own the entire right, title, and interest are:

Additional Statement(s) by the owner(s) holding the balance of the interest must be submitted to account for the entire right, title, and interest.

4. ☐ The recipient, via a court proceeding or the like (*e.g.*, bankruptcy, probate), of an undivided interest in the entirety (a complete transfer of ownership interest was made). The certified document(s) showing the transfer is attached.

The interest identified in option 1, 2 or 3 above (not option 4) is evidenced by either (choose **one** of options A or B below):

A. ☐ An assignment from the inventor(s) of the patent application/patent identified above. The assignment was recorded in the United States Patent and Trademark Office at Reel _____, Frame _____, or for which a copy thereof is attached.

B. ☑ A chain of title from the inventor(s), of the patent application/patent identified above, to the current assignee as follows:

1. From: Peter John Cousins To: SUNPOWER CORPORATION

The document was recorded in the United States Patent and Trademark Office at

Reel 020595, Frame 0792, or for which a copy thereof is attached.

2. From: _____ To: _____

The document was recorded in the United States Patent and Trademark Office at

Reel _____, Frame _____, or for which a copy thereof is attached.

This collection of information is required by 37 CFR 3.73(b). The information is required to obtain or retain a benefit by the public which is to file (and by the USPTO to process) an application. Confidentiality is governed by 35 U.S.C. 122 and 37 CFR 1.11 and 1.14. This collection is estimated to take 12 minutes to complete, including gathering, preparing, and submitting the completed application form to the USPTO. Time will vary depending upon the individual case. Any comments on the amount of time you require to complete this form and/or suggestions for reducing this burden, should be sent to the Chief Information Officer, U.S. Patent and Trademark Office, U.S. Department of Commerce, P.O. Box 1450, Alexandria, VA 22313-1450. DO NOT SEND FEES OR COMPLETED FORMS TO THIS ADDRESS. **SEND TO: Commissioner for Patents, P.O. Box 1450, Alexandria, VA 22313-1450.**

If you need assistance in completing the form, call 1-800-PTO-9199 and select option 2.

Under the Paperwork Reduction Act of 1995, no persons are required to respond to a collection of information unless it displays a valid OMB control number.

STATEMENT UNDER 37 CFR 3.73(c)

3. From: _____ To: _____

The document was recorded in the United States Patent and Trademark Office at

Reel _____, Frame _____, or for which a copy thereof is attached.

4. From: _____ To: _____

The document was recorded in the United States Patent and Trademark Office at

Reel _____, Frame _____, or for which a copy thereof is attached.

5. From: _____ To: _____

The document was recorded in the United States Patent and Trademark Office at

Reel _____, Frame _____, or for which a copy thereof is attached.

6. From: _____ To: _____

The document was recorded in the United States Patent and Trademark Office at

Reel _____, Frame _____, or for which a copy thereof is attached.

☐ Additional documents in the chain of title are listed on a supplemental sheet(s).

☑ As required by 37 CFR 3.73(c)(1)(i), the documentary evidence of the chain of title from the original owner to the assignee was, or concurrently is being, submitted for recordation pursuant to 37 CFR 3.11.

[NOTE: A separate copy (i.e., a true copy of the original assignment document(s)) must be submitted to Assignment Division in accordance with 37 CFR Part 3, to record the assignment in the records of the USPTO. See MPEP 302.08]

The undersigned (whose title is supplied below) is authorized to act on behalf of the assignee.

/Jackson Ho/	07-21-2022
Signature	Date
Jackson Ho	72,360
Printed or Typed Name	Title or Registration Number

Privacy Act Statement

The **Privacy Act of 1974 (P.L. 93-579)** requires that you be given certain information in connection with your submission of the attached form related to a patent application or patent. Accordingly, pursuant to the requirements of the Act, please be advised that: (1) the general authority for the collection of this information is 35 U.S.C. 2(b)(2); (2) furnishing of the information solicited is voluntary; and (3) the principal purpose for which the information is used by the U.S. Patent and Trademark Office is to process and/or examine your submission related to a patent application or patent. If you do not furnish the requested information, the U.S. Patent and Trademark Office may not be able to process and/or examine your submission, which may result in termination of proceedings or abandonment of the application or expiration of the patent.

The information provided by you in this form will be subject to the following routine uses:

1. The information on this form will be treated confidentially to the extent allowed under the Freedom of Information Act (5 U.S.C. 552) and the Privacy Act (5 U.S.C 552a). Records from this system of records may be disclosed to the Department of Justice to determine whether disclosure of these records is required by the Freedom of Information Act.
2. A record from this system of records may be disclosed, as a routine use, in the course of presenting evidence to a court, magistrate, or administrative tribunal, including disclosures to opposing counsel in the course of settlement negotiations.
3. A record in this system of records may be disclosed, as a routine use, to a Member of Congress submitting a request involving an individual, to whom the record pertains, when the individual has requested assistance from the Member with respect to the subject matter of the record.
4. A record in this system of records may be disclosed, as a routine use, to a contractor of the Agency having need for the information in order to perform a contract. Recipients of information shall be required to comply with the requirements of the Privacy Act of 1974, as amended, pursuant to 5 U.S.C. 552a(m).
5. A record related to an International Application filed under the Patent Cooperation Treaty in this system of records may be disclosed, as a routine use, to the International Bureau of the World Intellectual Property Organization, pursuant to the Patent Cooperation Treaty.
6. A record in this system of records may be disclosed, as a routine use, to another federal agency for purposes of National Security review (35 U.S.C. 181) and for review pursuant to the Atomic Energy Act (42 U.S.C. 218(c)).
7. A record from this system of records may be disclosed, as a routine use, to the Administrator, General Services, or his/her designee, during an inspection of records conducted by GSA as part of that agency's responsibility to recommend improvements in records management practices and programs, under authority of 44 U.S.C. 2904 and 2906. Such disclosure shall be made in accordance with the GSA regulations governing inspection of records for this purpose, and any other relevant (*i.e.*, GSA or Commerce) directive. Such disclosure shall not be used to make determinations about individuals.
8. A record from this system of records may be disclosed, as a routine use, to the public after either publication of the application pursuant to 35 U.S.C. 122(b) or issuance of a patent pursuant to 35 U.S.C. 151. Further, a record may be disclosed, subject to the limitations of 37 CFR 1.14, as a routine use, to the public if the record was filed in an application which became abandoned or in which the proceedings were terminated and which application is referenced by either a published application, an application open to public inspection or an issued patent.
9. A record from this system of records may be disclosed, as a routine use, to a Federal, State, or local law enforcement agency, if the USPTO becomes aware of a violation or potential violation of law or regulation.

UNITED STATES PATENT AND TRADEMARK OFFICE

UNITED STATES DEPARTMENT OF COMMERCE
United States Patent and Trademark Office
Address: COMMISSIONER FOR PATENTS
P.O. Box 1450
Alexandria, Virginia 22313-1450
www.uspto.gov

APPLICATION NUMBER	FILING OR 371(C) DATE	FIRST NAMED APPLICANT	ATTY. DOCKET NO./TITLE
17/870,268	07/21/2022	Peter John COUSINS	SKYW00056-1C US

CONFIRMATION NO. 1086

FORMALITIES LETTER

144187
Schmidt Patent Law, Inc.
2635 N. First Street
Suite 150
San Jose, CA 95134-2000

OC000000135549611

Date Mailed: 08/03/2022

NOTICE TO FILE MISSING PARTS OF NONPROVISIONAL APPLICATION

FILED UNDER 37 CFR 1.53(b)

Filing Date Granted

Items Required To Avoid Abandonment:

An application number and filing date have been accorded to this application. The item(s) indicated below, however, are missing. Applicant is given **TWO MONTHS** from the date of this Notice within which to file all required items below to avoid abandonment. Extensions of time may be obtained by filing a petition accompanied by the extension fee under the provisions of 37 CFR 1.136(a).

- The statutory basic filing fee is missing.
- The application search fee must be submitted.
- The application examination fee must be submitted.
- Surcharge as set forth in 37 CFR 1.16(f) must be submitted.
  The surcharge is due for any one of:
  - late submission of the basic filing fee, search fee, or examination fee,
  - late submission of inventor's oath or declaration,
  - filing an application that does not contain at least one claim on filing, or
  - submission of an application filed by reference to a previously filed application.

SUMMARY OF FEES DUE:

The fee(s) required within **TWO MONTHS** from the date of this Notice to avoid abandonment is/are itemized below. No entity status discount is in effect. If applicant is qualified for small entity status, a written assertion of small entity status must be submitted to establish small entity status. (See 37 CFR 1.27). If applicant is qualified for micro entity status, an acceptable Certification of Micro Entity Status must be submitted to establish micro entity status. (See 37 CFR 1.29 and forms PTO/SB/15A and 15B.)

- $ **320** basic filing fee.
- $ **160** surcharge.
- $ **700** search fee.
- $ **800** examination fee.
- $(**0**) previous unapplied payment amount.
- $ **1980** TOTAL FEE BALANCE DUE.

Replies must be received in the USPTO within the set time period or must include a proper Certificate of Mailing or Transmission under 37 CFR 1.8 with a mailing or transmission date within the set time period. For more information and a suggested format, see Form PTO/SB/92 and MPEP 512.

Replies should be mailed to:

Mail Stop Missing Parts
Commissioner for Patents
P.O. Box 1450
Alexandria VA 22313-1450

REPLY VIA ELECTRONIC FILING

A reply may be submitted via electronic filing only by registered users of the appropriate USPTO patent electronic filing system and must include:

- A separate document having the document description, "**Applicant response to Pre-Exam Formalities Notice**"; and
- the item(s) for which a reply period is set forth above.

For more information about electronic filing, contact the Patent Electronic Business Center (EBC) at 1-866-217-9197 or visit at https://www.uspto.gov/ebc.

NOTE: If the reply is not being submitted electronically, a copy of this notice must be included.

Questions about the contents of this notice and the requirements it sets forth should be directed to the Office of Data Management, Application Assistance Unit, at **(571) 272-4000** or **(571) 272-4200** or **1-888-786-0101**.

/elbanaybanay/

PATENT APPLICATION FEE DETERMINATION RECORD

Substitute for Form PTO-875

Application or Docket Number
17/870,268

APPLICATION AS FILED - PART I

FOR	(Column 1) NUMBER FILED	(Column 2) NUMBER EXTRA	SMALL ENTITY RATE($)	SMALL ENTITY FEE($)	OR	OTHER THAN SMALL ENTITY RATE($)	OTHER THAN SMALL ENTITY FEE($)
BASIC FEE (37 CFR 1.16(a), (b), or (c))	N/A	N/A	N/A			N/A	320
SEARCH FEE (37 CFR 1.16(k), (i), or (m))	N/A	N/A	N/A			N/A	700
EXAMINATION FEE (37 CFR 1.16(o), (p), or (q))	N/A	N/A	N/A			N/A	800
TOTAL CLAIMS (37 CFR 1.16(i))	20 minus 20 =	*			OR	x 100 =	0.00
INDEPENDENT CLAIMS (37 CFR 1.16(h))	3 minus 3 =	*				x 480 =	0.00
APPLICATION SIZE FEE (37 CFR 1.16(s))	If the specification and drawings exceed 100 sheets of paper, the application size fee due is $310 ($155 for small entity) for each additional 50 sheets or fraction thereof. See 35 U.S.C. 41(a)(1)(G) and 37 CFR 1.16(s).						0.00
MULTIPLE DEPENDENT CLAIM PRESENT (37 CFR 1.16(j))							0.00
* If the difference in column 1 is less than zero, enter "0" in column 2.			TOTAL			TOTAL	1820

APPLICATION AS AMENDED - PART II

		(Column 1) CLAIMS REMAINING AFTER AMENDMENT		(Column 2) HIGHEST NUMBER PREVIOUSLY PAID FOR	(Column 3) PRESENT EXTRA	SMALL ENTITY RATE($)	SMALL ENTITY ADDITIONAL FEE($)	OR	OTHER THAN SMALL ENTITY RATE($)	OTHER THAN SMALL ENTITY ADDITIONAL FEE($)
AMENDMENT A	Total (37 CFR 1.16(i))	*	Minus	**	=	x =		OR	x =	
AMENDMENT A	Independent (37 CFR 1.16(h))	*	Minus	***	=	x =		OR	x =	
AMENDMENT A	Application Size Fee (37 CFR 1.16(s))									
AMENDMENT A	FIRST PRESENTATION OF MULTIPLE DEPENDENT CLAIM (37 CFR 1.16(j))							OR		
						TOTAL ADD'L FEE		OR	TOTAL ADD'L FEE	

		(Column 1) CLAIMS REMAINING AFTER AMENDMENT		(Column 2) HIGHEST NUMBER PREVIOUSLY PAID FOR	(Column 3) PRESENT EXTRA	RATE($)	ADDITIONAL FEE($)	OR	RATE($)	ADDITIONAL FEE($)
AMENDMENT B	Total (37 CFR 1.16(i))	*	Minus	**	=	x =		OR	x =	
AMENDMENT B	Independent (37 CFR 1.16(h))	*	Minus	***	=	x =		OR	x =	
AMENDMENT B	Application Size Fee (37 CFR 1.16(s))									
AMENDMENT B	FIRST PRESENTATION OF MULTIPLE DEPENDENT CLAIM (37 CFR 1.16(j))							OR		
						TOTAL ADD'L FEE		OR	TOTAL ADD'L FEE	

* If the entry in column 1 is less than the entry in column 2, write "0" in column 3.
** If the "Highest Number Previously Paid For" IN THIS SPACE is less than 20, enter "20".
*** If the "Highest Number Previously Paid For" IN THIS SPACE is less than 3, enter "3".
The "Highest Number Previously Paid For" (Total or Independent) is the highest found in the appropriate box in column 1.

UNITED STATES PATENT AND TRADEMARK OFFICE

UNITED STATES DEPARTMENT OF COMMERCE
United States Patent and Trademark Office
Address: COMMISSIONER FOR PATENTS
P.O. Box 1450
Alexandria, Virginia 22313-1450
www.uspto.gov

APPLICATION NUMBER	FILING or 371(c) DATE	GRP ART UNIT	FIL FEE REC'D	ATTY.DOCKET.NO	TOT CLAIMS	IND CLAIMS
17/870,268	07/21/2022	1757	0.00	SKYW00056-1C US	20	3

CONFIRMATION NO. 1086

FILING RECEIPT

OC000000135549610

144187
Schmidt Patent Law, Inc.
2635 N. First Street
Suite 150
San Jose, CA 95134-2000

Date Mailed: 08/03/2022

Receipt is acknowledged of this non-provisional utility patent application. The application will be taken up for examination in due course. Applicant will be notified as to the results of the examination. Any correspondence concerning the application must include the following identification information: the U.S. APPLICATION NUMBER, FILING DATE, NAME OF FIRST INVENTOR, and TITLE OF INVENTION. Fees transmitted by check or draft are subject to collection.

Please verify the accuracy of the data presented on this receipt. If an error is noted on this Filing Receipt, please submit a written request for a corrected Filing Receipt, including a properly marked-up ADS showing the changes with strike-through for deletions and underlining for additions. If you received a "Notice to File Missing Parts" or other Notice requiring a response for this application, please submit any request for correction to this Filing Receipt with your reply to the Notice. When the USPTO processes the reply to the Notice, the USPTO will generate another Filing Receipt incorporating the requested corrections provided that the request is grantable.

Inventor(s)

Peter John COUSINS, Menlo Park, CA;

Applicant(s)

SunPower Corporation, San Jose, CA;

Assignment For Published Patent Application

SunPower Corporation, San Jose, CA

Power of Attorney: The patent practitioners associated with Customer Number 144187

Domestic Priority data as claimed by applicant

This application is a CON of 16/460,035 07/02/2019 ABN
which is a CON of 14/504,771 10/02/2014 ABN
which is a CON of 13/495,577 06/13/2012 PAT 8878053
which is a DIV of 12/070,742 02/20/2008 PAT 8222516

Foreign Applications for which priority is claimed (You may be eligible to benefit from the **Patent Prosecution Highway** program at the USPTO. Please see http://www.uspto.gov for more information.) - None.
Foreign application information must be provided in an Application Data Sheet in order to constitute a claim to foreign priority. See 37 CFR 1.55 and 1.76.

Permission to Access Application via Priority Document Exchange: Yes

Permission to Access Search Results: Yes

Applicant may provide or rescind an authorization for access using Form PTO/SB/39 or Form PTO/SB/69 as appropriate.

If Required, Foreign Filing License Granted: 08/01/2022

The country code and number of your priority application, to be used for filing abroad under the Paris Convention, is **US 17/870,268**

Projected Publication Date: To Be Determined - pending completion of Missing Parts

Non-Publication Request: No

Early Publication Request: No
Title

FRONT CONTACT SOLAR CELL WITH FORMED EMITTER

Preliminary Class

136

Statement under 37 CFR 1.55 or 1.78 for AIA (First Inventor to File) Transition Applications: No

PROTECTING YOUR INVENTION OUTSIDE THE UNITED STATES

Since the rights granted by a U.S. patent extend only throughout the territory of the United States and have no effect in a foreign country, an inventor who wishes patent protection in another country must apply for a patent in a specific country or in regional patent offices. Applicants may wish to consider the filing of an international application under the Patent Cooperation Treaty (PCT). An international (PCT) application generally has the same effect as a regular national patent application in each PCT-member country. The PCT process **simplifies** the filing of patent applications on the same invention in member countries, but **does not result** in a grant of "an international patent" and does not eliminate the need of applicants to file additional documents and fees in countries where patent protection is desired.

Almost every country has its own patent law, and a person desiring a patent in a particular country must make an application for patent in that country in accordance with its particular laws. Since the laws of many countries differ in various respects from the patent law of the United States, applicants are advised to seek guidance from specific foreign countries to ensure that patent rights are not lost prematurely.

Applicants also are advised that in the case of inventions made in the United States, the Director of the USPTO must issue a license before applicants can apply for a patent in a foreign country. The filing of a U.S. patent application serves as a request for a foreign filing license. The application's filing receipt contains further information and guidance as to the status of applicant's license for foreign filing.

Applicants may wish to consult the USPTO booklet, "General Information Concerning Patents" (specifically, the section entitled "Treaties and Foreign Patents") for more information on timeframes and deadlines for filing foreign patent applications. The guide is available either by contacting the USPTO Contact Center at 800-786-9199, or it can be viewed on the USPTO website at http://www.uspto.gov/web/offices/pac/doc/general/index.html.

For information on preventing theft of your intellectual property (patents, trademarks and copyrights), you may wish to consult the U.S. Government website, http://www.stopfakes.gov. Part of a Department of Commerce initiative, this website includes self-help "toolkits" giving innovators guidance on how to protect intellectual property in specific

countries such as China, Korea and Mexico. For questions regarding patent enforcement issues, applicants may call the U.S. Government hotline at 1-866-999-HALT (1-866-999-4258).

LICENSE FOR FOREIGN FILING UNDER

Title 35, United States Code, Section 184

Title 37, Code of Federal Regulations, 5.11 & 5.15

GRANTED

The applicant has been granted a license under 35 U.S.C. 184, if the phrase "IF REQUIRED, FOREIGN FILING LICENSE GRANTED" followed by a date appears on this form. Such licenses are issued in all applications where the conditions for issuance of a license have been met, regardless of whether or not a license may be required as set forth in 37 CFR 5.15. The scope and limitations of this license are set forth in 37 CFR 5.15(a) unless an earlier license has been issued under 37 CFR 5.15(b). The license is subject to revocation upon written notification. The date indicated is the effective date of the license, unless an earlier license of similar scope has been granted under 37 CFR 5.13 or 5.14.

This license is to be retained by the licensee and may be used at any time on or after the effective date thereof unless it is revoked. This license is automatically transferred to any related applications(s) filed under 37 CFR 1.53(d). This license is not retroactive.

The grant of a license does not in any way lessen the responsibility of a licensee for the security of the subject matter as imposed by any Government contract or the provisions of existing laws relating to espionage and the national security or the export of technical data. Licensees should apprise themselves of current regulations especially with respect to certain countries, of other agencies, particularly the Office of Defense Trade Controls, Department of State (with respect to Arms, Munitions and Implements of War (22 CFR 121-128)); the Bureau of Industry and Security, Department of Commerce (15 CFR parts 730-774); the Office of Foreign AssetsControl, Department of Treasury (31 CFR Parts 500+) and the Department of Energy.

NOT GRANTED

No license under 35 U.S.C. 184 has been granted at this time, if the phrase "IF REQUIRED, FOREIGN FILING LICENSE GRANTED" DOES NOT appear on this form. Applicant may still petition for a license under 37 CFR 5.12, if a license is desired before the expiration of 6 months from the filing date of the application. If 6 months has lapsed from the filing date of this application and the licensee has not received any indication of a secrecy order under 35 U.S.C. 181, the licensee may foreign file the application pursuant to 37 CFR 5.15(b).

SelectUSA

The United States represents the largest, most dynamic marketplace in the world and is an unparalleled location for business investment, innovation, and commercialization of new technologies. The U.S. offers tremendous resources and advantages for those who invest and manufacture goods here. Through SelectUSA, our nation works to promote and facilitate business investment. SelectUSA provides information assistance to the international investor community; serves as an ombudsman for existing and potential investors; advocates on behalf of U.S. cities, states, and regions competing for global investment; and counsels U.S. economic development organizations on investment attraction best practices. To learn more about why the United States is the best country in the world to develop

technology, manufacture products, deliver services, and grow your business, visit http://www.SelectUSA.gov or call +1-202-482-6800.

IN THE UNITED STATES PATENT AND TRADEMARK OFFICE

Applicant:	SunPower Corporation		
First Inventor:	Peter John Cousins		
Title:	FRONT CONTACT SOLAR CELL WITH FORMED EMITTER		
Application No.:	17/870,268	Filing Date:	06-21-2022
Examiner:	-	Group Art Unit:	1757
Docket No.:	SKYW00056-1C US	Confirmation No.:	1086

October 3, 2022

Filed Via EFS-Web
Commissioner for Patents
P.O. Box 1450
Alexandria, VA 22313-1450

PRELIMINARY AMENDMENT

Sir:

Please enter this amendment before beginning examination of this application.

Amendments to the claims begin on page 2.

Remarks begin on page 4.

AMENDMENTS TO THE CLAIMS

This listing of claims will replace all prior versions and listings of claims in the application:

1-20. (Canceled)

21. (New) A solar cell comprising:

a silicon substrate having a textured front surface and a back surface opposite the front surface, the front surface facing the sun to collect solar radiation during normal operation;

an antireflective layer over the textured front surface of the silicon substrate;

a doped diffusion region in the silicon substrate, the doped diffusion region proximate to the textured front surface of the silicon substrate;

a tunnel oxide layer formed on the back surface of the silicon substrate, the tunnel oxide layer having a thickness of about 10 to 50 Angstroms;

a doped polysilicon emitter layer formed on the tunnel oxide layer, the doped polysilicon emitter layer and the doped diffusion region having opposite conductivity types;

a front metal contact disposed on and in contact with the front surface of the silicon substrate; and

a rear metal contact disposed on and in contact with the doped polysilicon emitter layer.

22. (New) The solar cell of claim 21, wherein the antireflective layer comprises silicon nitride.

23. (New) The solar cell of claim 21 comprising an oxide layer formed on the textured front surface of the silicon substrate.

24. (New) The solar cell of claim 23, wherein the oxide layer comprises silicon dioxide.

25. (New) The solar cell of claim 24, wherein the silicon dioxide is thermally grown to a thickness of about 10 to 250 Angstroms.

26. (New) The solar cell of claim 21, wherein the tunnel oxide layer comprises silicon dioxide.

27. (New) The solar cell of claim 26, wherein the tunnel oxide layer is thermally grown.

28. (New) The solar cell of claim 21 comprising a dielectric layer formed on the doped polysilicon emitter layer.

29. (New) The solar cell of claim 28 wherein the dielectric layer comprises contact holes through which rear metal contact makes an electrical connection with the doped polysilicon emitter layer.

30. (New) The solar cell of claim 21, wherein rear metal contact comprises silver.

31. (New) The solar cell of claim 21 comprising a front bus bar attached to a front side of the solar cell, the front bus bar in electrical contact with the front metal contact.

32. (New) The solar cell of claim 21 comprising a rear bus bar attached to a rear side of the solar cell, the rear bus bar in electrical contact with the rear metal contact.

33. (New) The solar cell of claim 21, wherein the silicon substrate has a thickness measured from the back surface to a tip of the textured front surface of about 100 to 250 μm.

34. (New) The solar cell of claim 21, wherein the silicon substrate is a N-type silicon substrate.

REMARKS

This application was filed with claims 1-20. This preliminary amendment cancels claims 1-20 and adds new claims 21-34. Accordingly, claims 21-34 are submitted for examination.

No new matter has been added.

The Commissioner is hereby authorized to charge any additional fee(s), charge any underpayment of fee(s), or credit any overpayment associated with this communication to Deposit Account No. 60-3846.

CERTIFICATE OF EFS-WEB TRANSMISSION
Certificate of Transmission: I hereby certify that this correspondence is being transmitted to the United States Patent and Trademark Office (USPTO) via the USPTO's EFS-Web electronic filing system on October 3, 2022.

Jackson Ho

Signature: /Jackson Ho/

Respectfully submitted,

/Jackson Ho/
Jackson Ho
Attorney for Applicant
Reg. No. 72,360

Schmidt Patent Law, Inc.
2635 N. First Street
Suite 150
San Jose, CA 95134-2000
Telephone: (408) 331-1671
Facsimile: (669) 272-2077
E-mail: jho@spatentlaw.com

Electronic Patent Application Fee Transmittal

Application Number:	17870268
Filing Date:	21-Jul-2022
Title of Invention:	FRONT CONTACT SOLAR CELL WITH FORMED EMITTER
First Named Inventor/Applicant Name:	Peter John COUSINS
Filer:	Jackson Ho/Julie Fosnaugh
Attorney Docket Number:	SKYW00056-1C US

Filed as Large Entity

Filing Fees for Utility under 35 USC 111(a)

Description	Fee Code	Quantity	Amount	Sub-Total in USD($)
Basic Filing:				
UTILITY APPLICATION FILING	1011	1	320	320
UTILITY SEARCH FEE	1111	1	700	700
UTILITY EXAMINATION FEE	1311	1	800	800
Pages:				
Claims:				
Miscellaneous-Filing:				
LATE FILING FEE FOR OATH OR DECLARATION	1051	1	160	160
Petition:				

Description	Fee Code	Quantity	Amount	Sub-Total in USD($)
Patent-Appeals-and-Interference:				
Post-Allowance-and-Post-Issuance:				
Extension-of-Time:				
Miscellaneous:				
			Total in USD ($)	**1980**

Electronic Acknowledgement Receipt

EFS ID:	46741672
Application Number:	17870268
International Application Number:	
Confirmation Number:	1086
Title of Invention:	FRONT CONTACT SOLAR CELL WITH FORMED EMITTER
First Named Inventor/Applicant Name:	Peter John COUSINS
Customer Number:	144187
Filer:	Jackson Ho/Julie Fosnaugh
Filer Authorized By:	Jackson Ho
Attorney Docket Number:	SKYW00056-1C US
Receipt Date:	03-OCT-2022
Filing Date:	21-JUL-2022
Time Stamp:	15:55:58
Application Type:	Utility under 35 USC 111(a)

Payment information:

Submitted with Payment	yes
Payment Type	CARD
Payment was successfully received in RAM	$1980
RAM confirmation Number	E202203F56551522
Deposit Account	603846
Authorized User	Julie Fosnaugh

The Director of the USPTO is hereby authorized to charge indicated fees and credit any overpayment as follows:

37 CFR 1.21 (Miscellaneous fees and charges)

File Listing:

Document Number	Document Description	File Name	File Size(Bytes)/ Message Digest	Multi Part /.zip	Pages (if appl.)
1	Applicant Response to Pre-Exam Formalities Notice	SKYW00056_1CUS_S0123US4_RESPMPRTS_10032022_EF.pdf	117072 b04fc1a3ad5e67be91edf78ef4b546c3ad8a0e1d	no	2
Warnings:					
Information:					
2		SKYW00056_1CUS_S0123US4__PreAmdt_10032022_EF.pdf	131686 859fcc4a8d68664943b40fff384904a5ccd2465f	yes	5

Multipart Description/PDF files in .zip description

Document Description	Start	End
Preliminary Amendment	1	1
Claims	2	3
Applicant Arguments/Remarks Made in an Amendment	4	5

Warnings:					
Information:					
3	Fee Worksheet (SB06)	fee-info.pdf	46534 677886441d4793f77a9c4638b941aae87b6fa220	no	2
Warnings:					
Information:					
			Total Files Size (in bytes):	295292	

This Acknowledgement Receipt evidences receipt on the noted date by the USPTO of the indicated documents, characterized by the applicant, and including page counts, where applicable. It serves as evidence of receipt similar to a Post Card, as described in MPEP 503.

New Applications Under 35 U.S.C. 111
If a new application is being filed and the application includes the necessary components for a filing date (see 37 CFR 1.53(b)-(d) and MPEP 506), a Filing Receipt (37 CFR 1.54) will be issued in due course and the date shown on this Acknowledgement Receipt will establish the filing date of the application.
National Stage of an International Application under 35 U.S.C. 371
If a timely submission to enter the national stage of an international application is compliant with the conditions of 35 U.S.C. 371 and other applicable requirements a Form PCT/DO/EO/903 indicating acceptance of the application as a national stage submission under 35 U.S.C. 371 will be issued in addition to the Filing Receipt, in due course.
New International Application Filed with the USPTO as a Receiving Office
If a new international application is being filed and the international application includes the necessary components for an international filing date (see PCT Article 11 and MPEP 1810), a Notification of the International Application Number and of the International Filing Date (Form PCT/RO/105) will be issued in due course, subject to prescriptions concerning national security, and the date shown on this Acknowledgement Receipt will establish the international filing date of the application.

IN THE UNITED STATES PATENT AND TRADEMARK OFFICE

Applicant:	SunPower Corporation		
First Inventor:	Peter John Cousins		
Title:	FRONT CONTACT SOLAR CELL WITH FORMED EMITTER		
Application No.:	17/870,268	Filing Date:	07-21-2022
Examiner:	-	Group Art Unit:	1757
Docket No.:	SKYW00056-1C US	Confirmation No.:	1086

October 3, 2022

Mail Stop Missing Parts
Commissioner for Patents
P.O. Box 1450
Alexandria, VA 22313-1450

RESPONSE TO FILE MISSING PARTS OF NONPROVISIONAL APPLICATION

-Filing Date Granted-

Sir:

This responds to the Formalities Letter corresponding to the above captioned application having a mailing date of August 3, 2022. The required USPTO fees listed below are submitted:

- $ 320 basic filing fee.
- $ 160 surcharge.
- $ 700 search fee.
- $ 800 examination fee.
- $1980 TOTAL.

Applicant submits that the USPTO's formalities requirement has now been satisfied and the application filing date of July 21, 2022 is justified.

The Commissioner is hereby authorized to charge any additional fee(s), charge any underpayment of fee(s), or credit any overpayment associated with this communication to Deposit Account No. 60-3846.

CERTIFICATE OF EFS-WEB TRANSMISSION
Certificate of Transmission: I hereby certify that this correspondence is being transmitted to the United States Patent and Trademark Office (USPTO) via the USPTO's EFS-Web electronic filing system on October 3, 2022.

Jackson Ho

Signature: /Jackson Ho/

Respectfully submitted,

/Jackson Ho/
Jackson Ho
Attorney for Applicant
Reg. No. 72,360

Schmidt Patent Law, Inc.
2635 N. First Street
Suite 150
San Jose, CA 95134-2000
Telephone: (408) 331-1671
Facsimile: (669) 272-2077
E-mail: jho@spatentlaw.com

UNITED STATES PATENT AND TRADEMARK OFFICE

UNITED STATES DEPARTMENT OF COMMERCE
United States Patent and Trademark Office
Address: COMMISSIONER FOR PATENTS
P.O. Box 1450
Alexandria, Virginia 22313-1450
www.uspto.gov

APPLICATION NUMBER	FILING or 371(c) DATE	GRP ART UNIT	FIL FEE REC'D	ATTY.DOCKET.NO	TOT CLAIMS	IND CLAIMS
17/870,268	07/21/2022	1757	1980	SKYW00056-1C US	14	1

CONFIRMATION NO. 1086

UPDATED FILING RECEIPT

OC000000136490647*

144187
Schmidt Patent Law, Inc.
2635 N. First Street
Suite 150
San Jose, CA 95134-2000

Date Mailed: 10/05/2022

Receipt is acknowledged of this non-provisional utility patent application. The application will be taken up for examination in due course. Applicant will be notified as to the results of the examination. Any correspondence concerning the application must include the following identification information: the U.S. APPLICATION NUMBER, FILING DATE, NAME OF FIRST INVENTOR, and TITLE OF INVENTION. Fees transmitted by check or draft are subject to collection.

Please verify the accuracy of the data presented on this receipt. If an error is noted on this Filing Receipt, please submit a written request for a corrected Filing Receipt, including a properly marked-up ADS showing the changes with strike-through for deletions and underlining for additions. If you received a "Notice to File Missing Parts" or other Notice requiring a response for this application, please submit any request for correction to this Filing Receipt with your reply to the Notice. When the USPTO processes the reply to the Notice, the USPTO will generate another Filing Receipt incorporating the requested corrections provided that the request is grantable.

Inventor(s)

Peter John COUSINS, Menlo Park, CA;

Applicant(s)

SunPower Corporation, San Jose, CA;

Assignment For Published Patent Application

SunPower Corporation, San Jose, CA

Power of Attorney: The patent practitioners associated with Customer Number 144187

Domestic Priority data as claimed by applicant

This application is a CON of 16/460,035 07/02/2019 ABN
which is a CON of 14/504,771 10/02/2014 ABN
which is a CON of 13/495,577 06/13/2012 PAT 8878053
which is a DIV of 12/070,742 02/20/2008 PAT 8222516

Foreign Applications for which priority is claimed (You may be eligible to benefit from the **Patent Prosecution Highway** program at the USPTO. Please see http://www.uspto.gov for more information.) - None.
Foreign application information must be provided in an Application Data Sheet in order to constitute a claim to foreign priority. See 37 CFR 1.55 and 1.76.

Permission to Access Application via Priority Document Exchange: Yes

Permission to Access Search Results: Yes

Applicant may provide or rescind an authorization for access using Form PTO/SB/39 or Form PTO/SB/69 as appropriate.

If Required, Foreign Filing License Granted: 08/01/2022

The country code and number of your priority application, to be used for filing abroad under the Paris Convention, is **US 17/870,268**

Projected Publication Date: 01/12/2023

Non-Publication Request: No

Early Publication Request: No
Title

FRONT CONTACT SOLAR CELL WITH FORMED EMITTER

Preliminary Class

136

Statement under 37 CFR 1.55 or 1.78 for AIA (First Inventor to File) Transition Applications: No

PROTECTING YOUR INVENTION OUTSIDE THE UNITED STATES

Since the rights granted by a U.S. patent extend only throughout the territory of the United States and have no effect in a foreign country, an inventor who wishes patent protection in another country must apply for a patent in a specific country or in regional patent offices. Applicants may wish to consider the filing of an international application under the Patent Cooperation Treaty (PCT). An international (PCT) application generally has the same effect as a regular national patent application in each PCT-member country. The PCT process **simplifies** the filing of patent applications on the same invention in member countries, but **does not result** in a grant of "an international patent" and does not eliminate the need of applicants to file additional documents and fees in countries where patent protection is desired.

Almost every country has its own patent law, and a person desiring a patent in a particular country must make an application for patent in that country in accordance with its particular laws. Since the laws of many countries differ in various respects from the patent law of the United States, applicants are advised to seek guidance from specific foreign countries to ensure that patent rights are not lost prematurely.

Applicants also are advised that in the case of inventions made in the United States, the Director of the USPTO must issue a license before applicants can apply for a patent in a foreign country. The filing of a U.S. patent application serves as a request for a foreign filing license. The application's filing receipt contains further information and guidance as to the status of applicant's license for foreign filing.

Applicants may wish to consult the USPTO booklet, "General Information Concerning Patents" (specifically, the section entitled "Treaties and Foreign Patents") for more information on timeframes and deadlines for filing foreign patent applications. The guide is available either by contacting the USPTO Contact Center at 800-786-9199, or it can be viewed on the USPTO website at http://www.uspto.gov/web/offices/pac/doc/general/index.html.

For information on preventing theft of your intellectual property (patents, trademarks and copyrights), you may wish to consult the U.S. Government website, http://www.stopfakes.gov. Part of a Department of Commerce initiative, this website includes self-help "toolkits" giving innovators guidance on how to protect intellectual property in specific

countries such as China, Korea and Mexico. For questions regarding patent enforcement issues, applicants may call the U.S. Government hotline at 1-866-999-HALT (1-866-999-4258).

LICENSE FOR FOREIGN FILING UNDER

Title 35, United States Code, Section 184

Title 37, Code of Federal Regulations, 5.11 & 5.15

GRANTED

The applicant has been granted a license under 35 U.S.C. 184, if the phrase "IF REQUIRED, FOREIGN FILING LICENSE GRANTED" followed by a date appears on this form. Such licenses are issued in all applications where the conditions for issuance of a license have been met, regardless of whether or not a license may be required as set forth in 37 CFR 5.15. The scope and limitations of this license are set forth in 37 CFR 5.15(a) unless an earlier license has been issued under 37 CFR 5.15(b). The license is subject to revocation upon written notification. The date indicated is the effective date of the license, unless an earlier license of similar scope has been granted under 37 CFR 5.13 or 5.14.

This license is to be retained by the licensee and may be used at any time on or after the effective date thereof unless it is revoked. This license is automatically transferred to any related applications(s) filed under 37 CFR 1.53(d). This license is not retroactive.

The grant of a license does not in any way lessen the responsibility of a licensee for the security of the subject matter as imposed by any Government contract or the provisions of existing laws relating to espionage and the national security or the export of technical data. Licensees should apprise themselves of current regulations especially with respect to certain countries, of other agencies, particularly the Office of Defense Trade Controls, Department of State (with respect to Arms, Munitions and Implements of War (22 CFR 121-128)); the Bureau of Industry and Security, Department of Commerce (15 CFR parts 730-774); the Office of Foreign AssetsControl, Department of Treasury (31 CFR Parts 500+) and the Department of Energy.

NOT GRANTED

No license under 35 U.S.C. 184 has been granted at this time, if the phrase "IF REQUIRED, FOREIGN FILING LICENSE GRANTED" DOES NOT appear on this form. Applicant may still petition for a license under 37 CFR 5.12, if a license is desired before the expiration of 6 months from the filing date of the application. If 6 months has lapsed from the filing date of this application and the licensee has not received any indication of a secrecy order under 35 U.S.C. 181, the licensee may foreign file the application pursuant to 37 CFR 5.15(b).

SelectUSA

The United States represents the largest, most dynamic marketplace in the world and is an unparalleled location for business investment, innovation, and commercialization of new technologies. The U.S. offers tremendous resources and advantages for those who invest and manufacture goods here. Through SelectUSA, our nation works to promote and facilitate business investment. SelectUSA provides information assistance to the international investor community; serves as an ombudsman for existing and potential investors; advocates on behalf of U.S. cities, states, and regions competing for global investment; and counsels U.S. economic development organizations on investment attraction best practices. To learn more about why the United States is the best country in the world to develop

technology, manufacture products, deliver services, and grow your business, visit http://www.SelectUSA.gov or call +1-202-482-6800.

PATENT APPLICATION FEE DETERMINATION RECORD

Substitute for Form PTO-875

Application or Docket Number
17/870,268

APPLICATION AS FILED - PART I

FOR	(Column 1) NUMBER FILED	(Column 2) NUMBER EXTRA	SMALL ENTITY RATE($)	SMALL ENTITY FEE($)	OR	OTHER THAN SMALL ENTITY RATE($)	OTHER THAN SMALL ENTITY FEE($)
BASIC FEE (37 CFR 1.16(a), (b), or (c))	N/A	N/A	N/A			N/A	320
SEARCH FEE (37 CFR 1.16(k), (i), or (m))	N/A	N/A	N/A			N/A	700
EXAMINATION FEE (37 CFR 1.16(o), (p), or (q))	N/A	N/A	N/A			N/A	800
TOTAL CLAIMS (37 CFR 1.16(i))	14 minus 20 =	*			OR	x 100 =	0.00
INDEPENDENT CLAIMS (37 CFR 1.16(h))	1 minus 3 =	*				x 480 =	0.00
APPLICATION SIZE FEE (37 CFR 1.16(s))	If the specification and drawings exceed 100 sheets of paper, the application size fee due is $310 ($155 for small entity) for each additional 50 sheets or fraction thereof. See 35 U.S.C. 41(a)(1)(G) and 37 CFR 1.16(s).						0.00
MULTIPLE DEPENDENT CLAIM PRESENT (37 CFR 1.16(j))							0.00
* If the difference in column 1 is less than zero, enter "0" in column 2.			TOTAL			TOTAL	1820

APPLICATION AS AMENDED - PART II

		(Column 1) CLAIMS REMAINING AFTER AMENDMENT		(Column 2) HIGHEST NUMBER PREVIOUSLY PAID FOR	(Column 3) PRESENT EXTRA	SMALL ENTITY RATE($)	SMALL ENTITY ADDITIONAL FEE($)	OR	OTHER THAN SMALL ENTITY RATE($)	OTHER THAN SMALL ENTITY ADDITIONAL FEE($)
AMENDMENT A	Total (37 CFR 1.16(i))	*	Minus	**	=	x =		OR	x =	
AMENDMENT A	Independent (37 CFR 1.16(h))	*	Minus	***	=	x =		OR	x =	
AMENDMENT A	Application Size Fee (37 CFR 1.16(s))									
AMENDMENT A	FIRST PRESENTATION OF MULTIPLE DEPENDENT CLAIM (37 CFR 1.16(j))							OR		
						TOTAL ADD'L FEE		OR	TOTAL ADD'L FEE	

		(Column 1) CLAIMS REMAINING AFTER AMENDMENT		(Column 2) HIGHEST NUMBER PREVIOUSLY PAID FOR	(Column 3) PRESENT EXTRA	RATE($)	ADDITIONAL FEE($)	OR	RATE($)	ADDITIONAL FEE($)
AMENDMENT B	Total (37 CFR 1.16(i))	*	Minus	**	=	x =		OR	x =	
AMENDMENT B	Independent (37 CFR 1.16(h))	*	Minus	***	=	x =		OR	x =	
AMENDMENT B	Application Size Fee (37 CFR 1.16(s))									
AMENDMENT B	FIRST PRESENTATION OF MULTIPLE DEPENDENT CLAIM (37 CFR 1.16(j))							OR		
						TOTAL ADD'L FEE		OR	TOTAL ADD'L FEE	

* If the entry in column 1 is less than the entry in column 2, write "0" in column 3.
** If the "Highest Number Previously Paid For" IN THIS SPACE is less than 20, enter "20".
*** If the "Highest Number Previously Paid For" IN THIS SPACE is less than 3, enter "3".
The "Highest Number Previously Paid For" (Total or Independent) is the highest found in the appropriate box in column 1.

UNITED STATES PATENT AND TRADEMARK OFFICE

UNITED STATES DEPARTMENT OF COMMERCE
United States Patent and Trademark Office
Address: COMMISSIONER FOR PATENTS
P.O. Box 1450
Alexandria, Virginia 22313-1450
www.uspto.gov

APPLICATION NUMBER	FILING OR 371(C) DATE	FIRST NAMED APPLICANT	ATTY. DOCKET NO./TITLE
17/870,268	07/21/2022	Peter John COUSINS	SKYW00056-1C US

CONFIRMATION NO. 1086

PUBLICATION NOTICE

OC000000137233991

144187
Schmidt Patent Law, Inc.
2635 N. First Street
Suite 150
San Jose, CA 95134-2000

Title:FRONT CONTACT SOLAR CELL WITH FORMED EMITTER

Publication No.US-2023-0021009-A1
Publication Date:01/19/2023

NOTICE OF PUBLICATION OF APPLICATION

The above-identified application will be electronically published as a patent application publication pursuant to 37 CFR 1.211, et seq. The patent application publication number and publication date are set forth above.

The publication may be accessed through the USPTO's publically available Searchable Databases via the Internet at www.uspto.gov. The direct link to access the publication is currently http://www.uspto.gov/patft/.

The publication process established by the Office does not provide for mailing a copy of the publication to applicant. A copy of the publication may be obtained from the Office upon payment of the appropriate fee set forth in 37 CFR 1.19(a)(1). Orders for copies of patent application publications are handled by the USPTO's Public Records Division. The Public Records Division can be reached by telephone at (571) 272-3150 or (800) 972-6382, by facsimile at (571) 273-3250, by mail addressed to the United States Patent and Trademark Office, Public Records Division, Alexandria, VA 22313-1450 or via the Internet.

In addition, information on the status of the application, including the mailing date of Office actions and the dates of receipt of correspondence filed in the Office, may also be accessed via the Internet through the Patent Electronic Business Center at www.uspto.gov using the public side of the Patent Application Information and Retrieval (PAIR) system. The direct link to access this status information is currently https://portal.uspto.gov/pair/PublicPair. Prior to publication, such status information is confidential and may only be obtained by applicant using the private side of PAIR.

Further assistance in electronically accessing the publication, or about PAIR, is available by calling the Patent Electronic Business Center at 1-866-217-9197.

Office of Data Managment, Application Assistance Unit (571) 272-4000, or (571) 272-4200, or 1-888-786-0101

IN THE UNITED STATES PATENT AND TRADEMARK OFFICE

Applicant:	MAXEON SOLAR PTE. LTD.		
First Named Inventor:	Peter John COUSINS		
Title:	Front Contact Solar Cell with Formed Emitter		
Application No.:	17/870,268	Filing Date:	07-21-2022
Examiner:	Devina Pillay	Group Art Unit:	1726
Docket No.:	SKYW00056-1C US	Confirmation No.:	1086

February 9, 2023

Filed EFS-Web
Commissioner for Patents
P.O. Box 1450
Alexandria, VA 22313-1450

REQUEST FOR CORRECTED FILING RECEIPT

Dear Sir/Madam:

Submitted herewith for filing in the above identified application is a Supplemental Application Data Sheet, Statement under 3.73(c) and, Power of Attorney changing the Name of the Applicant/Assignee to "MAXEON SOLAR PTE. LTD.". Applicant requests that the Office issue a new, updated filing receipt.

Please telephone the undersigned at (408) 331-1671, if there are any questions.

CERTIFICATE OF EFS-WEB TRANSMISSION
Certificate of Transmission: I hereby certify that this correspondence is being transmitted to the United States Patent and Trademark Office (USPTO) via the USPTO's EFS-Web electronic filing system on February 9, 2023.

Jackson Ho

Signature: /Jackson Ho/

Respectfully submitted,

/Jackson Ho/
Jackson Ho
Attorney for Applicant
Reg. No. 72,360

Schmidt Patent Law, Inc.
2635 N. First Street, Suite 150
San Jose, CA 95134-2000
Tel: (408) 331-1671
Fax: (669) 272-2077
E-mail: jho@spatentlaw.com

PTO/AIA/80 (07-17)
Approved for use through 03/31/2021. OMB 0651-0035
U.S. Patent and Trademark Office; U.S. DEPARTMENT OF COMMERCE
Under the Paperwork Reduction Act of 1995, no person is required to respond to a collection of information unless it displays a valid OMB control number

POWER OF ATTORNEY TO PROSECUTE APPLICATIONS BEFORE THE USPTO

I hereby revoke all previous powers of attorney given in the application identified in the attached statement under 37 CFR 3.73(c).

I hereby appoint:

[X] Practitioners associated with Customer Number: 188295

OR

[ ] Practitioner(s) named below (if more than ten patent practitioners are to be named, then a customer number must be used):

Name	Registration Number	Name	Registration Number

As attorney(s) or agent(s) to represent the undersigned before the United States Patent and Trademark Office (USPTO) in connection with any and all patent applications assigned only to the undersigned according to the USPTO assignment records or assignment documents attached to this form in accordance with 37 CFR 3.73(c).

Please change the correspondence address for the application identified in the attached statement under 37 CFR 3.73(c) to:

[X] The address associated with Customer Number: 188295

OR

[ ]

Firm or individual name		
Address		
City	State	Zip
Country		
Telephone	Email	

Assignee name and address: Maxeon Solar Pte. Ltd.
8 Marina Boulevard #05-02
Marina Bay Financial Centre
Singapore 018981
SG

A copy of this form, together with a statement under 37 CFR 3.73(c) (Form PTO/AIA/96 or equivalent) is required to be filed in each application in which this form is used. The statement under 37 CFR 3.73(c) may be completed by one of the practitioners appointed in this form, and must identify the application in which this Power of Attorney is to be filed.

SIGNATURE of Assignee of Record

The individual whose signature and title is supplied below is authorized to act on behalf of the assignee.

Signature	Date 2022-Sep-24
Name Marc Robinson	Telephone
Title Associate General Counsel, Assistant Secretary	

This collection of information is required by 37 CFR 1.31, 1.32, and 1.33. The information is required to obtain or retain a benefit by the public, which is to update (and by the USPTO to process) the file of a patent or reexamination proceeding. Confidentiality is governed by 35 U.S.C. 122 and 37 CFR 1.11 and 1.14. This collection is estimated to take 18 minutes to complete, including gathering, preparing, and submitting the completed application form to the USPTO. Time will vary depending upon the individual case. Any comments on the amount of time you require to complete this form and/or suggestions for reducing this burden, should be sent to the Chief Information Officer, U.S. Patent and Trademark Office, U.S. Department of Commerce, P.O. Box 1450, Alexandria, VA 22313-1450. DO NOT SEND FEES OR COMPLETED FORMS TO THIS ADDRESS. **SEND TO: Commissioner for Patents, P.O. Box 1450, Alexandria, VA 22313-1450.**
If you need assistance in completing the form, call 1-800-PTO-9199 and select option 2.

Under the Paperwork Reduction Act of 1995, no persons are required to respond to a collection of information unless it displays a valid OMB control number.

STATEMENT UNDER 37 CFR 3.73(c)

Applicant/Patent Owner: MAXEON SOLAR PTE. LTD.

Application No./Patent No.: 17/870,268 Filed/Issue Date: 07/21/2022

Titled: FRONT CONTACT SOLAR CELL WITH FORMED EMITTER

MAXEON SOLAR PTE. LTD., a corporation

(Name of Assignee) (Type of Assignee, e.g., corporation, partnership, university, government agency, etc.)

states that, for the patent application/patent identified above, it is (choose **one** of options 1, 2, 3 or 4 below):

1. ☑ The assignee of the entire right, title, and interest.

2. ☐ An assignee of less than the entire right, title, and interest (check applicable box):

☐ The extent (by percentage) of its ownership interest is _____%. Additional Statement(s) by the owners holding the balance of the interest must be submitted to account for 100% of the ownership interest.

☐ There are unspecified percentages of ownership. The other parties, including inventors, who together own the entire right, title and interest are:

Additional Statement(s) by the owner(s) holding the balance of the interest must be submitted to account for the entire right, title, and interest.

3. ☐ The assignee of an undivided interest in the entirety (a complete assignment from one of the joint inventors was made). The other parties, including inventors, who together own the entire right, title, and interest are:

Additional Statement(s) by the owner(s) holding the balance of the interest must be submitted to account for the entire right, title, and interest.

4. ☐ The recipient, via a court proceeding or the like (*e.g.*, bankruptcy, probate), of an undivided interest in the entirety (a complete transfer of ownership interest was made). The certified document(s) showing the transfer is attached.

The interest identified in option 1, 2 or 3 above (not option 4) is evidenced by either (choose **one** of options A or B below):

A. ☐ An assignment from the inventor(s) of the patent application/patent identified above. The assignment was recorded in the United States Patent and Trademark Office at Reel _____, Frame _____, or for which a copy thereof is attached.

B. ☑ A chain of title from the inventor(s), of the patent application/patent identified above, to the current assignee as follows:

1. From: COUSINS, PETER JOHN To: SUNPOWER CORPORATION

The document was recorded in the United States Patent and Trademark Office at Reel 020595, Frame 0791, or for which a copy thereof is attached.

2. From: SUNPOWER CORPORATION To: MAXEON SOLAR PTE. LTD.

The document was recorded in the United States Patent and Trademark Office at Reel 062490, Frame 0742, or for which a copy thereof is attached.

This collection of information is required by 37 CFR 3.73(b). The information is required to obtain or retain a benefit by the public which is to file (and by the USPTO to process) an application. Confidentiality is governed by 35 U.S.C. 122 and 37 CFR 1.11 and 1.14. This collection is estimated to take 12 minutes to complete, including gathering, preparing, and submitting the completed application form to the USPTO. Time will vary depending upon the individual case. Any comments on the amount of time you require to complete this form and/or suggestions for reducing this burden, should be sent to the Chief Information Officer, U.S. Patent and Trademark Office, U.S. Department of Commerce, P.O. Box 1450, Alexandria, VA 22313-1450. DO NOT SEND FEES OR COMPLETED FORMS TO THIS ADDRESS. **SEND TO: Commissioner for Patents, P.O. Box 1450, Alexandria, VA 22313-1450.**

If you need assistance in completing the form, call 1-800-PTO-9199 and select option 2.

Under the Paperwork Reduction Act of 1995, no persons are required to respond to a collection of information unless it displays a valid OMB control number.

STATEMENT UNDER 37 CFR 3.73(c)

3. From: _____ To: _____

The document was recorded in the United States Patent and Trademark Office at

Reel _____, Frame _____, or for which a copy thereof is attached.

4. From: _____ To: _____

The document was recorded in the United States Patent and Trademark Office at

Reel _____, Frame _____, or for which a copy thereof is attached.

5. From: _____ To: _____

The document was recorded in the United States Patent and Trademark Office at

Reel _____, Frame _____, or for which a copy thereof is attached.

6. From: _____ To: _____

The document was recorded in the United States Patent and Trademark Office at

Reel _____, Frame _____, or for which a copy thereof is attached.

☐ Additional documents in the chain of title are listed on a supplemental sheet(s).

☑ As required by 37 CFR 3.73(c)(1)(i), the documentary evidence of the chain of title from the original owner to the assignee was, or concurrently is being, submitted for recordation pursuant to 37 CFR 3.11.

[NOTE: A separate copy (i.e., a true copy of the original assignment document(s)) must be submitted to Assignment Division in accordance with 37 CFR Part 3, to record the assignment in the records of the USPTO. See MPEP 302.08]

The undersigned (whose title is supplied below) is authorized to act on behalf of the assignee.

/Jackson Ho/	02-09-2023
Signature	Date
Jackson Ho	72,360
Printed or Typed Name	Title or Registration Number

Privacy Act Statement

The **Privacy Act of 1974 (P.L. 93-579)** requires that you be given certain information in connection with your submission of the attached form related to a patent application or patent. Accordingly, pursuant to the requirements of the Act, please be advised that: (1) the general authority for the collection of this information is 35 U.S.C. 2(b)(2); (2) furnishing of the information solicited is voluntary; and (3) the principal purpose for which the information is used by the U.S. Patent and Trademark Office is to process and/or examine your submission related to a patent application or patent. If you do not furnish the requested information, the U.S. Patent and Trademark Office may not be able to process and/or examine your submission, which may result in termination of proceedings or abandonment of the application or expiration of the patent.

The information provided by you in this form will be subject to the following routine uses:

1. The information on this form will be treated confidentially to the extent allowed under the Freedom of Information Act (5 U.S.C. 552) and the Privacy Act (5 U.S.C 552a). Records from this system of records may be disclosed to the Department of Justice to determine whether disclosure of these records is required by the Freedom of Information Act.
2. A record from this system of records may be disclosed, as a routine use, in the course of presenting evidence to a court, magistrate, or administrative tribunal, including disclosures to opposing counsel in the course of settlement negotiations.
3. A record in this system of records may be disclosed, as a routine use, to a Member of Congress submitting a request involving an individual, to whom the record pertains, when the individual has requested assistance from the Member with respect to the subject matter of the record.
4. A record in this system of records may be disclosed, as a routine use, to a contractor of the Agency having need for the information in order to perform a contract. Recipients of information shall be required to comply with the requirements of the Privacy Act of 1974, as amended, pursuant to 5 U.S.C. 552a(m).
5. A record related to an International Application filed under the Patent Cooperation Treaty in this system of records may be disclosed, as a routine use, to the International Bureau of the World Intellectual Property Organization, pursuant to the Patent Cooperation Treaty.
6. A record in this system of records may be disclosed, as a routine use, to another federal agency for purposes of National Security review (35 U.S.C. 181) and for review pursuant to the Atomic Energy Act (42 U.S.C. 218(c)).
7. A record from this system of records may be disclosed, as a routine use, to the Administrator, General Services, or his/her designee, during an inspection of records conducted by GSA as part of that agency's responsibility to recommend improvements in records management practices and programs, under authority of 44 U.S.C. 2904 and 2906. Such disclosure shall be made in accordance with the GSA regulations governing inspection of records for this purpose, and any other relevant (*i.e.*, GSA or Commerce) directive. Such disclosure shall not be used to make determinations about individuals.
8. A record from this system of records may be disclosed, as a routine use, to the public after either publication of the application pursuant to 35 U.S.C. 122(b) or issuance of a patent pursuant to 35 U.S.C. 151. Further, a record may be disclosed, subject to the limitations of 37 CFR 1.14, as a routine use, to the public if the record was filed in an application which became abandoned or in which the proceedings were terminated and which application is referenced by either a published application, an application open to public inspection or an issued patent.
9. A record from this system of records may be disclosed, as a routine use, to a Federal, State, or local law enforcement agency, if the USPTO becomes aware of a violation or potential violation of law or regulation.

Under the Paperwork Reduction Act of 1995, no persons are required to respond to a collection of information unless it contains a valid OMB control number.

Application Data Sheet 37 CFR 1.76	Attorney Docket Number	SKYW00056-1C US
	Application Number	17/870,268
Title of Invention	FRONT CONTACT SOLAR CELL WITH FORMED EMITTER	

The application data sheet is part of the provisional or nonprovisional application for which it is being submitted. The following form contains the bibliographic data arranged in a format specified by the United States Patent and Trademark Office as outlined in 37 CFR 1.76.
This document may be completed electronically and submitted to the Office in electronic format using the Electronic Filing System (EFS) or the document may be printed and included in a paper filed application.

Secrecy Order 37 CFR 5.2:

☐ Portions or all of the application associated with this Application Data Sheet may fall under a Secrecy Order pursuant to 37 CFR 5.2 (Paper filers only. Applications that fall under Secrecy Order may not be filed electronically.)

Inventor Information:

Inventor 1 Remove

Legal Name

Prefix	Given Name	Middle Name	Family Name	Suffix
	Peter	John	COUSINS	

Residence Information (Select One) ◉ US Residency ○ Non US Residency ○ Active US Military Service

City	Menlo Park	State/Province	CA	Country of Residence	US

Mailing Address of Inventor:

Address 1	c/o SunPower Corporation		
Address 2	51 Rio Robles		
City	San Jose	**State/Province**	CA
Postal Code	95134	**Country**	US

All Inventors Must Be Listed - Additional Inventor Information blocks may be generated within this form by selecting the **Add** button. Add

Correspondence Information:

Enter either Customer Number or complete the Correspondence Information section below.
For further information see 37 CFR 1.33(a).

☐ **An Address is being provided for the correspondence Information of this application.**

Customer Number	~~111187~~ **188295**		
Email Address		Add Email	Remove Email

Application Information:

Title of the Invention	FRONT CONTACT SOLAR CELL WITH FORMED EMITTER		
Attorney Docket Number	SKYW00056-1C US	**Small Entity Status Claimed**	☐
Application Type	Nonprovisional		
Subject Matter	Utility		
Total Number of Drawing Sheets (if any)	7	**Suggested Figure for Publication (if any)**	1

Under the Paperwork Reduction Act of 1995, no persons are required to respond to a collection of information unless it contains a valid OMB control number.

Application Data Sheet 37 CFR 1.76	Attorney Docket Number	SKYW00056-1C US
	Application Number	17/870,268
Title of Invention	FRONT CONTACT SOLAR CELL WITH FORMED EMITTER	

Filing By Reference:

Only complete this section when filing an application by reference under 35 U.S.C. 111(c) and 37 CFR 1.57(a). Do not complete this section if application papers including a specification and any drawings are being filed. Any domestic benefit or foreign priority information must be provided in the appropriate section(s) below (i.e., "Domestic Benefit/National Stage Information" and "Foreign Priority Information").

For the purposes of a filing date under 37 CFR 1.53(b), the description and any drawings of the present application are replaced by this reference to the previously filed application, subject to conditions and requirements of 37 CFR 1.57(a).

Application number of the previously filed application	Filing date (YYYY-MM-DD)	Intellectual Property Authority or Country

Publication Information:

☐ Request Early Publication (Fee required at time of Request 37 CFR 1.219)

☐ **Request Not to Publish.** I hereby request that the attached application not be published under 35 U.S.C. 122(b) and certify that the invention disclosed in the attached application **has not and will not** be the subject of an application filed in another country, or under a multilateral international agreement, that requires publication at eighteen months after filing.

Representative Information:

Representative information should be provided for all practitioners having a power of attorney in the application. Providing this information in the Application Data Sheet does not constitute a power of attorney in the application (see 37 CFR 1.32).
Either enter Customer Number or complete the Representative Name section below. If both sections are completed the customer Number will be used for the Representative Information during processing.

Please Select One:	◉ Customer Number	○ US Patent Practitioner	○ Limited Recognition (37 CFR 11.9)
Customer Number	~~444197~~ **188295**		

Domestic Benefit/National Stage Information:

This section allows for the applicant to either claim benefit under 35 U.S.C. 119(e), 120, 121, 365(c), or 386(c) or indicate National Stage entry from a PCT application. Providing benefit claim information in the Application Data Sheet constitutes the specific reference required by 35 U.S.C. 119(e) or 120, and 37 CFR 1.78.
When referring to the current application, please leave the "Application Number" field blank.

Prior Application Status	~~Pending~~ **Abandoned**		Remove
Application Number	Continuity Type	Prior Application Number	Filing or 371(c) Date (YYYY-MM-DD)
	Continuation of	16460035	2019-07-02

Under the Paperwork Reduction Act of 1995, no persons are required to respond to a collection of information unless it contains a valid OMB control number.

Application Data Sheet 37 CFR 1.76	Attorney Docket Number	SKYW00056-1C US
	Application Number	17/870,268
Title of Invention	FRONT CONTACT SOLAR CELL WITH FORMED EMITTER	

Prior Application Status	Abandoned		Remove
Application Number	Continuity Type	Prior Application Number	Filing or 371(c) Date (YYYY-MM-DD)
16460035	Continuation of	14504771	2014-10-02

Prior Application Status	Patented			Remove	
Application Number	Continuity Type	Prior Application Number	Filing Date (YYYY-MM-DD)	Patent Number	Issue Date (YYYY-MM-DD)
14504771	Continuation of	13495577	2012-06-13	8878053	2014-11-04

Prior Application Status	Patented			Remove	
Application Number	Continuity Type	Prior Application Number	Filing Date (YYYY-MM-DD)	Patent Number	Issue Date (YYYY-MM-DD)
13495577	Division of	12070742	2008-02-20	8222516	2012-07-17

Additional Domestic Benefit/National Stage Data may be generated within this form by selecting the **Add** button.

Foreign Priority Information:

This section allows for the applicant to claim priority to a foreign application. Providing this information in the application data sheet constitutes the claim for priority as required by 35 U.S.C. 119(b) and 37 CFR 1.55. When priority is claimed to a foreign application that is eligible for retrieval under the priority document exchange program (PDX)[i] the information will be used by the Office to automatically attempt retrieval pursuant to 37 CFR 1.55(i)(1) and (2). Under the PDX program, applicant bears the ultimate responsibility for ensuring that a copy of the foreign application is received by the Office from the participating foreign intellectual property office, or a certified copy of the foreign priority application is filed, within the time period specified in 37 CFR 1.55(g)(1).

Remove

Application Number	Country[i]	Filing Date (YYYY-MM-DD)	Access Code[i] (if applicable)

Additional Foreign Priority Data may be generated within this form by selecting the **Add** button.

Statement under 37 CFR 1.55 or 1.78 for AIA (First Inventor to File) Transition Applications

☐ This application (1) claims priority to or the benefit of an application filed before March 16, 2013 and (2) also contains, or contained at any time, a claim to a claimed invention that has an effective filing date on or after March 16, 2013.
NOTE: By providing this statement under 37 CFR 1.55 or 1.78, this application, with a filing date on or after March 16, 2013, will be examined under the first inventor to file provisions of the AIA.

Under the Paperwork Reduction Act of 1995, no persons are required to respond to a collection of information unless it contains a valid OMB control number.

Application Data Sheet 37 CFR 1.76	Attorney Docket Number	SKYW00056-1C US
	Application Number	17/870,268
Title of Invention	FRONT CONTACT SOLAR CELL WITH FORMED EMITTER	

Authorization or Opt-Out of Authorization to Permit Access:

When this Application Data Sheet is properly signed and filed with the application, applicant has provided written authority to permit a participating foreign intellectual property (IP) office access to the instant application-as-filed (see paragraph A in subsection 1 below) and the European Patent Office (EPO) access to any search results from the instant application (see paragraph B in subsection 1 below).

Should applicant choose not to provide an authorization identified in subsection 1 below, applicant **must opt-out** of the authorization by checking the corresponding box A or B or both in subsection 2 below.

NOTE: This section of the Application Data Sheet is **ONLY** reviewed and processed with the **INITIAL** filing of an application. After the initial filing of an application, an Application Data Sheet cannot be used to provide or rescind authorization for access by a foreign IP office(s). Instead, Form PTO/SB/39 or PTO/SB/69 must be used as appropriate.

1. Authorization to Permit Access by a Foreign Intellectual Property Office(s)

A. Priority Document Exchange (PDX) - Unless box A in subsection 2 (opt-out of authorization) is checked, the undersigned hereby **grants the USPTO authority** to provide the European Patent Office (EPO), the Japan Patent Office (JPO), the Korean Intellectual Property Office (KIPO), the State Intellectual Property Office of the People's Republic of China (SIPO), the World Intellectual Property Organization (WIPO), and any other foreign intellectual property office participating with the USPTO in a bilateral or multilateral priority document exchange agreement in which a foreign application claiming priority to the instant patent application is filed, access to: (1) the instant patent application-as-filed and its related bibliographic data, (2) any foreign or domestic application to which priority or benefit is claimed by the instant application and its related bibliographic data, and (3) the date of filing of this Authorization. See 37 CFR 1.14(h)(1).

B. Search Results from U.S. Application to EPO - Unless box B in subsection 2 (opt-out of authorization) is checked, the undersigned hereby **grants the USPTO authority** to provide the EPO access to the bibliographic data and search results from the instant patent application when a European patent application claiming priority to the instant patent application is filed. See 37 CFR 1.14(h)(2).

The applicant is reminded that the EPO's Rule 141(1) EPC (European Patent Convention) requires applicants to submit a copy of search results from the instant application without delay in a European patent application that claims priority to the instant application.

2. Opt-Out of Authorizations to Permit Access by a Foreign Intellectual Property Office(s)

☐ A. Applicant **DOES NOT** authorize the USPTO to permit a participating foreign IP office access to the instant application-as-filed. If this box is checked, the USPTO will not be providing a participating foreign IP office with any documents and information identified in subsection 1A above.

☐ B. Applicant **DOES NOT** authorize the USPTO to transmit to the EPO any search results from the instant patent application. If this box is checked, the USPTO will not be providing the EPO with search results from the instant application.

NOTE: Once the application has published or is otherwise publicly available, the USPTO may provide access to the application in accordance with 37 CFR 1.14.

Under the Paperwork Reduction Act of 1995, no persons are required to respond to a collection of information unless it contains a valid OMB control number.

Application Data Sheet 37 CFR 1.76	Attorney Docket Number	SKYW00056-1C US
	Application Number	17/870,268
Title of Invention	FRONT CONTACT SOLAR CELL WITH FORMED EMITTER	

Applicant Information:

Providing assignment information in this section does not substitute for compliance with any requirement of part 3 of Title 37 of CFR to have an assignment recorded by the Office.

Applicant 1

If the applicant is the inventor (or the remaining joint inventor or inventors under 37 CFR 1.45), this section should not be completed. The information to be provided in this section is the name and address of the legal representative who is the applicant under 37 CFR 1.43; or the name and address of the assignee, person to whom the inventor is under an obligation to assign the invention, or person who otherwise shows sufficient proprietary interest in the matter who is the applicant under 37 CFR 1.46. If the applicant is an applicant under 37 CFR 1.46 (assignee, person to whom the inventor is obligated to assign, or person who otherwise shows sufficient proprietary interest) together with one or more joint inventors, then the joint inventor or inventors who are also the applicant should be identified in this section.

Clear

- (●) Assignee
- ( ) Legal Representative under 35 U.S.C. 117
- ( ) Joint Inventor
- ( ) Person to whom the inventor is obligated to assign.
- ( ) Person who shows sufficient proprietary interest

If applicant is the legal representative, indicate the authority to file the patent application, the inventor is:

Name of the Deceased or Legally Incapacitated Inventor:

If the Applicant is an Organization check here. ☒

Organization Name	~~SunPower Corporation~~ **MAXEON SOLAR PTE. LTD.**		
Mailing Address Information For Applicant:			
Address 1	~~51 Rio Robles~~ **8 MARINA BOULEVARD #05-02**		
Address 2	**MARINA BAY FINANCIAL CENTRE**		
City	~~San Jose~~ **SINGAPORE**	**State/Province**	~~CA~~
Country	~~US~~ **SG**	Postal Code	~~95134~~ **18981**
Phone Number		Fax Number	
Email Address			

Additional Applicant Data may be generated within this form by selecting the Add button.

Assignee Information including Non-Applicant Assignee Information:

Providing assignment information in this section does not substitute for compliance with any requirement of part 3 of Title 37 of CFR to have an assignment recorded by the Office.

Under the Paperwork Reduction Act of 1995, no persons are required to respond to a collection of information unless it contains a valid OMB control number.

Application Data Sheet 37 CFR 1.76	Attorney Docket Number	SKYW00056-1C US
	Application Number	17/870,268
Title of Invention	FRONT CONTACT SOLAR CELL WITH FORMED EMITTER	

Assignee 1

Complete this section if assignee information, including non-applicant assignee information, is desired to be included on the patent application publication. An assignee-applicant identified in the "Applicant Information" section will appear on the patent application publication as an applicant. For an assignee-applicant, complete this section only if identification as an assignee is also desired on the patent application publication.

If the Assignee or Non-Applicant Assignee is an Organization check here. ☒

Organization Name	~~SunPower Corporation~~ **MAXEON SOLAR PTE. LTD.**

Mailing Address Information For Assignee including Non-Applicant Assignee:

Address 1	~~54 Rio Robles~~ **8 MARINA BOULEVARD #05-02**		
Address 2	**MARINA BAY FINANCIAL CENTRE**		
City	~~San Jose~~ **SINGAPORE**	**State/Province**	~~CA~~
Country i	~~US~~ **SG**	Postal Code	~~95134~~ **18981**
Phone Number		Fax Number	
Email Address			

Additional Assignee or Non-Applicant Assignee Data may be generated within this form by selecting the Add button.

Signature:

NOTE: This Application Data Sheet must be signed in accordance with 37 CFR 1.33(b). **However, if this Application Data Sheet is submitted with the INITIAL filing of the application and either box A or B is not checked in subsection 2 of the "Authorization or Opt-Out of Authorization to Permit Access" section, then this form must also be signed in accordance with 37 CFR 1.14(c).**

This Application Data Sheet **must** be signed by a patent practitioner if one or more of the applicants is a **juristic entity** (e.g., corporation or association). If the applicant is two or more joint inventors, this form must be signed by a patent practitioner, **all** joint inventors who are the applicant, or one or more joint inventor-applicants who have been given power of attorney (e.g., see USPTO Form PTO/AIA/81) on behalf of **all** joint inventor-applicants.

See 37 CFR 1.4(d) for the manner of making signatures and certifications.

Signature	/Jackson Ho/			Date (YYYY-MM-DD)	2023-02-09
First Name	Jackson	Last Name	Ho	Registration Number	72,360

Additional Signature may be generated within this form by selecting the Add button.

Under the Paperwork Reduction Act of 1995, no persons are required to respond to a collection of information unless it contains a valid OMB control number.

Application Data Sheet 37 CFR 1.76	Attorney Docket Number	SKYW00056-1C US
	Application Number	17/870,268
Title of Invention	FRONT CONTACT SOLAR CELL WITH FORMED EMITTER	

This collection of information is required by 37 CFR 1.76. The information is required to obtain or retain a benefit by the public which is to file (and by the USPTO to process) an application. Confidentiality is governed by 35 U.S.C. 122 and 37 CFR 1.14. This collection is estimated to take 23 minutes to complete, including gathering, preparing, and submitting the completed application data sheet form to the USPTO. Time will vary depending upon the individual case. Any comments on the amount of time you require to complete this form and/or suggestions for reducing this burden, should be sent to the Chief Information Officer, U.S. Patent and Trademark Office, U.S. Department of Commerce, P.O. Box 1450, Alexandria, VA 22313-1450. DO NOT SEND FEES OR COMPLETED FORMS TO THIS ADDRESS. **SEND TO: Commissioner for Patents, P.O. Box 1450, Alexandria, VA 22313-1450.**

Privacy Act Statement

The Privacy Act of 1974 (P.L. 93-579) requires that you be given certain information in connection with your submission of the attached form related to a patent application or patent. Accordingly, pursuant to the requirements of the Act, please be advised that: (1) the general authority for the collection of this information is 35 U.S.C. 2(b)(2); (2) furnishing of the information solicited is voluntary; and (3) the principal purpose for which the information is used by the U.S. Patent and Trademark Office is to process and/or examine your submission related to a patent application or patent. If you do not furnish the requested information, the U.S. Patent and Trademark Office may not be able to process and/or examine your submission, which may result in termination of proceedings or abandonment of the application or expiration of the patent.

The information provided by you in this form will be subject to the following routine uses:

1 The information on this form will be treated confidentially to the extent allowed under the Freedom of Information Act (5 U.S.C. 552) and the Privacy Act (5 U.S.C. 552a). Records from this system of records may be disclosed to the Department of Justice to determine whether the Freedom of Information Act requires disclosure of these records.

2. A record from this system of records may be disclosed, as a routine use, in the course of presenting evidence to a court, magistrate, or administrative tribunal, including disclosures to opposing counsel in the course of settlement negotiations.

3 A record in this system of records may be disclosed, as a routine use, to a Member of Congress submitting a request involving an individual, to whom the record pertains, when the individual has requested assistance from the Member with respect to the subject matter of the record.

4. A record in this system of records may be disclosed, as a routine use, to a contractor of the Agency having need for the information in order to perform a contract. Recipients of information shall be required to comply with the requirements of the Privacy Act of 1974, as amended, pursuant to 5 U.S.C. 552a(m).

5. A record related to an International Application filed under the Patent Cooperation Treaty in this system of records may be disclosed, as a routine use, to the International Bureau of the World Intellectual Property Organization, pursuant to the Patent CooperationTreaty.

6. A record in this system of records may be disclosed, as a routine use, to another federal agency for purposes of National Security review (35 U.S.C. 181) and for review pursuant to the Atomic Energy Act (42 U.S.C. 218(c)).

7. A record from this system of records may be disclosed, as a routine use, to the Administrator, General Services, or his/her designee, during an inspection of records conducted by GSA as part of that agency's responsibility to recommend improvements in records management practices and programs, under authority of 44 U.S.C. 2904 and 2906. Such disclosure shall be made in accordance with the GSA regulations governing inspection of records for this purpose, and any other relevant (i.e., GSA or Commerce) directive. Such disclosure shall not be used to make determinations about individuals.

8. A record from this system of records may be disclosed, as a routine use, to the public after either publication of the application pursuant to 35 U.S.C. 122(b) or issuance of a patent pursuant to 35 U.S.C. 151. Further, a record may be disclosed, subject to the limitations of 37 CFR 1.14, as a routine use, to the public if the record was filed in an application which became abandoned or in which the proceedings were terminated and which application is referenced by either a published application, an application open to public inspections or an issued patent.

9. A record from this system of records may be disclosed, as a routine use, to a Federal, State, or local law enforcement agency, if the USPTO becomes aware of a violation or potential violation of law or regulation.

Electronic Acknowledgement Receipt

EFS ID:	47508599
Application Number:	17870268
International Application Number:	
Confirmation Number:	1086
Title of Invention:	FRONT CONTACT SOLAR CELL WITH FORMED EMITTER
First Named Inventor/Applicant Name:	Peter John COUSINS
Customer Number:	144187
Filer:	Jackson Ho/Julie Fosnaugh
Filer Authorized By:	Jackson Ho
Attorney Docket Number:	SKYW00056-1C US
Receipt Date:	09-FEB-2023
Filing Date:	21-JUL-2022
Time Stamp:	15:39:34
Application Type:	Utility under 35 USC 111(a)

Payment information:

Submitted with Payment	no

File Listing:

Document Number	Document Description	File Name	File Size(Bytes)/ Message Digest	Multi Part /.zip	Pages (if appl.)
1	Request for Corrected Filing Receipt	S01234US4_SKYW00056-1CUS_TL_Req_CorrFR_EF.pdf	103455 4169726a7a99c1f5edac360d1997b783f3bb8a53	no	1

Warnings:

Information:					
2	Power of Attorney	S01234US4_SKYW00056_1CUS_POA_EF.pdf	143268 f290f5a86840bee42106fc646c9ba55e3ad56e95	no	1
Warnings:					
Information:					
3	Assignee showing of ownership per 37 CFR 3.73	S01234US4_SKYW00056-1CUS_Stmt373c_EF.pdf	118437 86741f57caa8d762a0ce5e902ca689750be4b0ec	no	3
Warnings:					
Information:					
4	Application Data Sheet	S01234US4_SKYW00056_1CUS_SuppADS_EF.pdf	182614 e4077d7cf3f40f77ddf6fc584b1987f6b66029f2	no	8
Warnings:					
Information:					
This is not an USPTO supplied ADS fillable form					
			Total Files Size (in bytes):	547774	

This Acknowledgement Receipt evidences receipt on the noted date by the USPTO of the indicated documents, characterized by the applicant, and including page counts, where applicable. It serves as evidence of receipt similar to a Post Card, as described in MPEP 503.

<u>New Applications Under 35 U.S.C. 111</u>
If a new application is being filed and the application includes the necessary components for a filing date (see 37 CFR 1.53(b)-(d) and MPEP 506), a Filing Receipt (37 CFR 1.54) will be issued in due course and the date shown on this Acknowledgement Receipt will establish the filing date of the application.
<u>National Stage of an International Application under 35 U.S.C. 371</u>
If a timely submission to enter the national stage of an international application is compliant with the conditions of 35 U.S.C. 371 and other applicable requirements a Form PCT/DO/EO/903 indicating acceptance of the application as a national stage submission under 35 U.S.C. 371 will be issued in addition to the Filing Receipt, in due course.
<u>New International Application Filed with the USPTO as a Receiving Office</u>
If a new international application is being filed and the international application includes the necessary components for an international filing date (see PCT Article 11 and MPEP 1810), a Notification of the International Application Number and of the International Filing Date (Form PCT/RO/105) will be issued in due course, subject to prescriptions concerning national security, and the date shown on this Acknowledgement Receipt will establish the international filing date of the application.

UNITED STATES PATENT AND TRADEMARK OFFICE

UNITED STATES DEPARTMENT OF COMMERCE
United States Patent and Trademark Office
Address: COMMISSIONER FOR PATENTS
P.O. Box 1450
Alexandria, Virginia 22313-1450
www.uspto.gov

APPLICATION NUMBER	FILING OR 371(C) DATE	FIRST NAMED APPLICANT	ATTY. DOCKET NO./TITLE
17/870,268	07/21/2022	Peter John COUSINS	SKYW00056-1C US

CONFIRMATION NO. 1086

POWER OF ATTORNEY NOTICE

144187
Schmidt Patent Law, Inc.
2635 N. First Street
Suite 150
San Jose, CA 95134-2000

OC000000137391690

Date Mailed: 02/14/2023

NOTICE REGARDING CHANGE OF POWER OF ATTORNEY

This is in response to the Power of Attorney filed 02/09/2023.

- The Power of Attorney to you in this application has been revoked by the applicant. Future correspondence will be mailed to the new address of record(37 CFR 1.33).

Questions about the contents of this notice and the requirements it sets forth should be directed to the Office of Data Management, Application Assistance Unit, at **(571) 272-4000** or **(571) 272-4200** or **1-888-786-0101**.

/ttran/

UNITED STATES PATENT AND TRADEMARK OFFICE

UNITED STATES DEPARTMENT OF COMMERCE
United States Patent and Trademark Office
Address: COMMISSIONER FOR PATENTS
P.O. Box 1450
Alexandria, Virginia 22313-1450
www.uspto.gov

APPLICATION NUMBER	FILING OR 371(C) DATE	FIRST NAMED APPLICANT	ATTY. DOCKET NO./TITLE
17/870,268	07/21/2022	Peter John COUSINS	SKYW00056-1C US

CONFIRMATION NO. 1086

188295
Schmidt Patent Law, Inc.
2635 N. First Street
Suite 150
San Jose, CA 95134-2000

POA ACCEPTANCE LETTER

OC000000137391693

Date Mailed: 02/14/2023

NOTICE OF ACCEPTANCE OF POWER OF ATTORNEY

This is in response to the Power of Attorney filed 02/09/2023.

The Power of Attorney in this application is accepted. Correspondence in this application will be mailed to the above address as provided by 37 CFR 1.33.

Questions about the contents of this notice and the requirements it sets forth should be directed to the Office of Data Management, Application Assistance Unit, at **(571) 272-4000** or **(571) 272-4200** or **1-888-786-0101**.

/ttran/

UNITED STATES PATENT AND TRADEMARK OFFICE

UNITED STATES DEPARTMENT OF COMMERCE
United States Patent and Trademark Office
Address: COMMISSIONER FOR PATENTS
P.O. Box 1450
Alexandria, Virginia 22313-1450
www.uspto.gov

APPLICATION NUMBER	FILING or 371(c) DATE	GRP ART UNIT	FIL FEE REC'D	ATTY.DOCKET.NO	TOT CLAIMS	IND CLAIMS
17/870,268	07/21/2022	1726	1980	SKYW00056-1C US	14	1

CONFIRMATION NO. 1086

CORRECTED FILING RECEIPT

188295
Schmidt Patent Law, Inc.
2635 N. First Street
Suite 150
San Jose, CA 95134-2000

OC000000137391698

Date Mailed: 02/14/2023

Receipt is acknowledged of this non-provisional utility patent application. The application will be taken up for examination in due course. Applicant will be notified as to the results of the examination. Any correspondence concerning the application must include the following identification information: the U.S. APPLICATION NUMBER, FILING DATE, NAME OF FIRST INVENTOR, and TITLE OF INVENTION. Fees transmitted by check or draft are subject to collection.

Please verify the accuracy of the data presented on this receipt. If an error is noted on this Filing Receipt, please submit a written request for a corrected Filing Receipt, including a properly marked-up ADS showing the changes with strike-through for deletions and underlining for additions. If you received a "Notice to File Missing Parts" or other Notice requiring a response for this application, please submit any request for correction to this Filing Receipt with your reply to the Notice. When the USPTO processes the reply to the Notice, the USPTO will generate another Filing Receipt incorporating the requested corrections provided that the request is grantable.

Inventor(s)

Peter John COUSINS, Menlo Park, CA;

Applicant(s)

MAXEON SOLAR PTE. LTD., Singapore, SINGAPORE;

Assignment For Published Patent Application

MAXEON SOLAR PTE. LTD., Singapore, SINGAPORE

Power of Attorney: The patent practitioners associated with Customer Number 188295

Domestic Priority data as claimed by applicant

This application is a CON of 16/460,035 07/02/2019 ABN
which is a CON of 14/504,771 10/02/2014 ABN
which is a CON of 13/495,577 06/13/2012 PAT 8878053
which is a DIV of 12/070,742 02/20/2008 PAT 8222516

Foreign Applications for which priority is claimed (You may be eligible to benefit from the **Patent Prosecution Highway** program at the USPTO. Please see http://www.uspto.gov for more information.) - None.
Foreign application information must be provided in an Application Data Sheet in order to constitute a claim to foreign priority. See 37 CFR 1.55 and 1.76.

Permission to Access Application via Priority Document Exchange: Yes

Permission to Access Search Results: Yes

Applicant may provide or rescind an authorization for access using Form PTO/SB/39 or Form PTO/SB/69 as appropriate.

If Required, Foreign Filing License Granted: 08/01/2022

The country code and number of your priority application, to be used for filing abroad under the Paris Convention, is **US 17/870,268**

Projected Publication Date: Not Applicable

Non-Publication Request: No

Early Publication Request: No
Title

FRONT CONTACT SOLAR CELL WITH FORMED EMITTER

Preliminary Class

136

Statement under 37 CFR 1.55 or 1.78 for AIA (First Inventor to File) Transition Applications: No

PROTECTING YOUR INVENTION OUTSIDE THE UNITED STATES

Since the rights granted by a U.S. patent extend only throughout the territory of the United States and have no effect in a foreign country, an inventor who wishes patent protection in another country must apply for a patent in a specific country or in regional patent offices. Applicants may wish to consider the filing of an international application under the Patent Cooperation Treaty (PCT). An international (PCT) application generally has the same effect as a regular national patent application in each PCT-member country. The PCT process **simplifies** the filing of patent applications on the same invention in member countries, but **does not result** in a grant of "an international patent" and does not eliminate the need of applicants to file additional documents and fees in countries where patent protection is desired.

Almost every country has its own patent law, and a person desiring a patent in a particular country must make an application for patent in that country in accordance with its particular laws. Since the laws of many countries differ in various respects from the patent law of the United States, applicants are advised to seek guidance from specific foreign countries to ensure that patent rights are not lost prematurely.

Applicants also are advised that in the case of inventions made in the United States, the Director of the USPTO must issue a license before applicants can apply for a patent in a foreign country. The filing of a U.S. patent application serves as a request for a foreign filing license. The application's filing receipt contains further information and guidance as to the status of applicant's license for foreign filing.

Applicants may wish to consult the USPTO booklet, "General Information Concerning Patents" (specifically, the section entitled "Treaties and Foreign Patents") for more information on timeframes and deadlines for filing foreign patent applications. The guide is available either by contacting the USPTO Contact Center at 800-786-9199, or it can be viewed on the USPTO website at http://www.uspto.gov/web/offices/pac/doc/general/index.html.

For information on preventing theft of your intellectual property (patents, trademarks and copyrights), you may wish to consult the U.S. Government website, http://www.stopfakes.gov. Part of a Department of Commerce initiative, this website includes self-help "toolkits" giving innovators guidance on how to protect intellectual property in specific

countries such as China, Korea and Mexico. For questions regarding patent enforcement issues, applicants may call the U.S. Government hotline at 1-866-999-HALT (1-866-999-4258).

LICENSE FOR FOREIGN FILING UNDER

Title 35, United States Code, Section 184

Title 37, Code of Federal Regulations, 5.11 & 5.15

GRANTED

The applicant has been granted a license under 35 U.S.C. 184, if the phrase "IF REQUIRED, FOREIGN FILING LICENSE GRANTED" followed by a date appears on this form. Such licenses are issued in all applications where the conditions for issuance of a license have been met, regardless of whether or not a license may be required as set forth in 37 CFR 5.15. The scope and limitations of this license are set forth in 37 CFR 5.15(a) unless an earlier license has been issued under 37 CFR 5.15(b). The license is subject to revocation upon written notification. The date indicated is the effective date of the license, unless an earlier license of similar scope has been granted under 37 CFR 5.13 or 5.14.

This license is to be retained by the licensee and may be used at any time on or after the effective date thereof unless it is revoked. This license is automatically transferred to any related applications(s) filed under 37 CFR 1.53(d). This license is not retroactive.

The grant of a license does not in any way lessen the responsibility of a licensee for the security of the subject matter as imposed by any Government contract or the provisions of existing laws relating to espionage and the national security or the export of technical data. Licensees should apprise themselves of current regulations especially with respect to certain countries, of other agencies, particularly the Office of Defense Trade Controls, Department of State (with respect to Arms, Munitions and Implements of War (22 CFR 121-128)); the Bureau of Industry and Security, Department of Commerce (15 CFR parts 730-774); the Office of Foreign AssetsControl, Department of Treasury (31 CFR Parts 500+) and the Department of Energy.

NOT GRANTED

No license under 35 U.S.C. 184 has been granted at this time, if the phrase "IF REQUIRED, FOREIGN FILING LICENSE GRANTED" DOES NOT appear on this form. Applicant may still petition for a license under 37 CFR 5.12, if a license is desired before the expiration of 6 months from the filing date of the application. If 6 months has lapsed from the filing date of this application and the licensee has not received any indication of a secrecy order under 35 U.S.C. 181, the licensee may foreign file the application pursuant to 37 CFR 5.15(b).

SelectUSA

The United States represents the largest, most dynamic marketplace in the world and is an unparalleled location for business investment, innovation, and commercialization of new technologies. The U.S. offers tremendous resources and advantages for those who invest and manufacture goods here. Through SelectUSA, our nation works to promote and facilitate business investment. SelectUSA provides information assistance to the international investor community; serves as an ombudsman for existing and potential investors; advocates on behalf of U.S. cities, states, and regions competing for global investment; and counsels U.S. economic development organizations on investment attraction best practices. To learn more about why the United States is the best country in the world to develop

technology, manufacture products, deliver services, and grow your business, visit http://www.SelectUSA.gov or call +1-202-482-6800.

PTO/SB/08a (01-22)
Approved for use through 05/31/2024. OMB 0651-0031
U.S. Patent and Trademark Office; U.S. DEPARTMENT OF COMMERCE
Under the Paperwork Reduction Act of 1995, no persons are required to respond to a collection of information unless it contains a valid OMB control number.

INFORMATION DISCLOSURE STATEMENT BY APPLICANT

(Not for submission under 37 CFR 1.99)

Application Number	17870268
Filing Date	2022-07-21
First Named Inventor	Peter John Cousins
Art Unit	1726
Examiner Name	DEVINA PILLAY
Attorney Docket Number	SKYW00056-1C US

U.S.PATENTS Remove

Examiner Initial*	Cite No	Patent Number	Kind Code[1]	Issue Date	Name of Patentee or Applicant of cited Document	Pages,Columns,Lines where Relevant Passages or Relevant Figures Appear
	1	8878053	B2	2014-11-04	Cousins	
	2	8222516	B2	2012-07-17	Cousins	
	3	3961997		1976-06-08	Chu	
	4	4427839		1984-01-24	Hall	
	5	4665277		1987-05-12	Sah et al.	
	6	4927770		1990-05-22	Swanson	
	7	5030295		1991-07-09	Swanson et al.	
	8	5053083		1991-10-01	Sinton	

INFORMATION DISCLOSURE STATEMENT BY APPLICANT (Not for submission under 37 CFR 1.99)		
	Application Number	17870268
	Filing Date	2022-07-21
	First Named Inventor	Peter John Cousins
	Art Unit	1726
	Examiner Name	DEVINA PILLAY
	Attorney Docket Number	SKYW00056-1C US

	9	5057439		1991-10-15	Swanson et al.	
	10	5217539		1993-06-08	Fraas et al.	
	11	5266125		1993-11-30	Rand et al.	
	12	5360990		1994-11-01	Swandon	
	13	5369291		1994-11-29	Swanson	
	14	5449626		1995-09-12	Hezel	
	15	5479018		1995-12-26	McKee et al.	
	16	5620904		1997-04-15	Hanoka	
	17	5641362		1997-06-24	Meier	
	18	5693578		1997-12-02	Nakanishi et al.	
	19	6262359		2001-07-17	Meier et al.	

INFORMATION DISCLOSURE STATEMENT BY APPLICANT (Not for submission under 37 CFR 1.99)		
	Application Number	17870268
	Filing Date	2022-07-21
	First Named Inventor	Peter John Cousins
	Art Unit	1726
	Examiner Name	DEVINA PILLAY
	Attorney Docket Number	SKYW00056-1C US

	20	6274402	B1	2001-08-14	Verlinden et al.	
	21	6313395	B1	2001-11-06	Crane et al.	
	22	6333457	B1	2001-12-25	Mulligan et al.	
	23	6337283	B1	2002-01-08	Verlinden et al.	
	24	6387726	B1	2002-05-14	Verlinden et al.	
	25	6423568	B1	2002-07-23	Verlinden et al.	
	26	6524880	B2	2003-02-25	Moon et al.	
	27	6638788	B2	2003-10-28	Emoto et al.	
	28	6998288	B1	2006-02-14	Smith et al.	
	29	6135350	B1	2006-10-24	White et al.	
	30	7468485	B1	2008-12-23	Swanson	

INFORMATION DISCLOSURE STATEMENT BY APPLICANT (Not for submission under 37 CFR 1.99)		
	Application Number	17870268
	Filing Date	2022-07-21
	First Named Inventor	Peter John Cousins
	Art Unit	1726
	Examiner Name	DEVINA PILLAY
	Attorney Docket Number	SKYW00056-1C US

	31	7633006	B1	2009-12-15	Swanson	
	32	8207444	B2	2012-06-26	Cousins	
	33	4492743		1983-01-08	Howe	
	34	4398054		1983-08-09	Madan	
	35	7998863	B2	2011-08-16	Wenham et al.	
	36	4900369		1990-02-13	Hezel et al.	
	37	4589191		1986-05-20	Green et al.	
	38	6429037	B1	2002-08-06	Wenham et al.	
	39	4865999		1989-09-12	Xi et al.	
	40	4525593		1985-06-25	Yablonovitch	
	41	6379994	B1	2002-04-30	Sano et al.	

INFORMATION DISCLOSURE STATEMENT BY APPLICANT (Not for submission under 37 CFR 1.99)		
	Application Number	17870268
	Filing Date	2022-07-21
	First Named Inventor	Peter John Cousins
	Art Unit	1726
	Examiner Name	DEVINA PILLAY
	Attorney Docket Number	SKYW00056-1C US

If you wish to add additional U.S. Patent citation information please click the Add button. Add

U.S.PATENT APPLICATION PUBLICATIONS Remove

Examiner Initial*	Cite No	Publication Number	Kind Code[1]	Publication Date	Name of Patentee or Applicant of cited Document	Pages,Columns,Lines where Relevant Passages or Relevant Figures Appear
	1	20020153039	A1	2002-10-24	Moon et al.	
	2	20030134469	A1	2003-07-17	Horzel et al.	
	3	20040200520	A1	2004-10-14	Mulligan et al.	
	4	20050016585	A1	2005-01-27	Munzer	
	5	20050268963	A1	2005-12-08	Jordan et al.	
	6	20060096635	A1	2006-05-11	Tuttle	
	7	20060130891	A1	2006-06-22	Carlson	
	8	20060157103	A1	2006-07-20	Sheats et al.	
	9	20060185716	A1	2006-08-24	Murozono et al.	

INFORMATION DISCLOSURE STATEMENT BY APPLICANT (Not for submission under 37 CFR 1.99)		
	Application Number	17870268
	Filing Date	2022-07-21
	First Named Inventor	Peter John Cousins
	Art Unit	1726
	Examiner Name	DEVINA PILLAY
	Attorney Docket Number	SKYW00056-1C US

	10	20070023081	A1	2007-02-01	Johnson et al.	
	11	20070082206	A1	2007-04-12	Hartig	
	12	20080078444	A1	2008-04-03	Atanackovic	
	13	20080173347	A1	2008-07-24	Korevaar et al.	
	14	20090159111	A1	2009-06-25	Jawarani et al.	
	15	20110114171	A1	2011-05-19	Meier et al.	
	16	20070256728	A1	2007-11-08	Cousins	
	17	20070194399	A1	2007-08-23	Bhattacharyya	
	18	20090301557	A1	2009-12-10	Agostinelli et al.	
	19	20080216893	A1	2008-09-11	Russell et al.	
	20	20080121266	A1	2008-05-29	Tsunomura et al.	

INFORMATION DISCLOSURE STATEMENT BY APPLICANT (Not for submission under 37 CFR 1.99)		
	Application Number	17870268
	Filing Date	2022-07-21
	First Named Inventor	Peter John Cousins
	Art Unit	1726
	Examiner Name	DEVINA PILLAY
	Attorney Docket Number	SKYW00056-1C US

	21	20070151599	A1	2007-07-05	Cousins			

If you wish to add additional U.S. Published Application citation information please click the Add button. Add

FOREIGN PATENT DOCUMENTS Remove

Examiner Initial*	Cite No	Foreign Document Number[3]	Country Code[2] i	Kind Code[4]	Publication Date	Name of Patentee or Applicant of cited Document	Pages,Columns,Lines where Relevant Passages or Relevant Figures Appear	T[5]
	1	2008/004791	WO	A1	2008-01-10	LG ELECTRONICS INC.		
	2	07-106611	JP	A	1995-04-21	TONEN CORP		
	3	2009/094578	WO	A2	2009-07-30	APPLIED MATERIALS, INC.		
	4	2009/094570	WO	A2	2009-07-30	APPLIED MATERIALS, INC.		

If you wish to add additional Foreign Patent Document citation information please click the Add button Add

NON-PATENT LITERATURE DOCUMENTS Remove

Examiner Initials*	Cite No	Include name of the author (in CAPITAL LETTERS), title of the article (when appropriate), title of the item (book, magazine, journal, serial, symposium, catalog, etc), date, pages(s), volume-issue number(s), publisher, city and/or country where published.	T[5]
	1	LINDHOLM, "Heavily doped Polysilicon-Contact Solar Cells", IEEE Electron Device Letters, vol. EDI.6, No. 7. pp. 363-365, Jul. 1985.	
	2	SILVESTRE, "Series Resistance in Double-Polysilicon Contacted Silicon Solar Cells", IEEE, 25th PVSC Washington DC, May 1996, pp. 497-500	

INFORMATION DISCLOSURE STATEMENT BY APPLICANT (Not for submission under 37 CFR 1.99)		
	Application Number	17870268
	Filing Date	2022-07-21
	First Named Inventor	Peter John Cousins
	Art Unit	1726
	Examiner Name	DEVINA PILLAY
	Attorney Docket Number	SKYW00056-1C US

	3	PCT International Search Report for Application No. PCT/US09/32345, March 23, 2009, 2 sheets.	
	4	W.P. MULLIGAN et al., "A Flat-Plate Concentrator: Micro-Concentrator Design Overview", 2000, 3 sheets, Proceedings of the 28th IEEE PVSC.	
	5	K.R. McINTOSH, et al., "The Choice of Silicon Wafer for the Production of Low-Cost Rear-Contaft Solar Cells", May 2003, 4 sheets, SunPower Corporation, Sunnyvale, California.	
	6	P.J. VERLINDEN et al., "Will We have a 20%-Efficient (PTC) Photovoltaic System?" 2001, 6 sheets, Proceedings of the 17th Europe Photovoltaic Solar Energy Conference.	
	7	W.P. MULLIGAN et al., "Development of Chi0Size Silicon Solar Cells", 2000, 6 sheets, Proceedings of the 28th IEEE PVSC.	
	8	TERAO et al., "A Mirror-Less Design for Micro-Concentrator Modules", 2000, 4 sheets, Proceedings of the 28th IEEE PVSC.	
	9	P.J. VERLINDEN et al., "Backside-Contact Silicon Solar Cells with Improved Efficiency for the '96 World Solar Challenge", 1997, 5 sheets, Proceedings of the 15th EPSEC.	
	10	P.J. VERLINDEN, et al., On-Year Comparison of a Concentrator Module with Silicon Point-Contact Solar Cell to a Fixed Flat Plate Module in Northern California", 2000, 4 sheets, Proceedings of the 16th EPSEC.	
	11	Richard M. Swanson, "The Promise of Concentrators", 2000, Prog. Photovolt. Res. Appl. 8 pp., 93-111.	
	12	Ronald A. Sinton et al., "Device Physics and Characterization of silicon Point-Contact Solar Cells", Feb. 1997, pp. 1-154, Stanford Electronics Laboratories, Stanford University, CA.	
	13	Richard Roland King, "Studies of Oxide-Passivated Emitters in Silicon and Applications to Solar Cells", Aug. 1990, pp. 1-200, (Thesis) Electrical Engineering Department of Stanford University, CA.	

INFORMATION DISCLOSURE STATEMENT BY APPLICANT (Not for submission under 37 CFR 1.99)	Application Number	17870268
	Filing Date	2022-07-21
	First Named Inventor	Peter John Cousins
	Art Unit	1726
	Examiner Name	DEVINA PILLAY
	Attorney Docket Number	SKYW00056-1C US

	14	Certified copy of priority document number US 61/023,342 filed 24 January 2008, 18 pages.	
	15	GAN, "Polysilicon emitters for silicon concentrator solar cells", Stanford University, 1990, 147 pages.	
	16	CHUANG et al., "Modeling and Characterization of SIPOS Emitter and Quasi-SIS Emitter Bipolar Transistors", IEEE Transactions on Electron Devices, Vol. 40, No. 4, April 1993, 8 pages.	
	17	GREEN et al., "High-Efficiency Silicon Solar Cells", IEEE Transactions on Electron Devices, Vol. ED-31, No. 5, May 1994, 5 pages.	
	18	SHEWCHUN et al., "MIS and SIS Solar Cells", IEEE Transactions on Electron Devices, Vol. ED-37, No. 4, April 1980, 12 pages.	
	19	OSIPOV, "Optically Induced Switching in BiStable Structures: Heavily Doped N+- Polysilicon-Tunnel Oxide Layer - n - Silicon, 375-382 © 1998 Kluwer Academic Publishers, pp. 375-382.	
	20	KRAY, "Study on the edge isolation of industrial silicon solar cells with waterjet-guided laser", Solar Energy Materials & Solar Cells 91 (2007) 1638-1644 (Year: 2007).	

If you wish to add additional non-patent literature document citation information please click the Add button Add

EXAMINER SIGNATURE

Examiner Signature		Date Considered	

*EXAMINER: Initial if reference considered, whether or not citation is in conformance with MPEP 609. Draw line through a citation if not in conformance and not considered. Include copy of this form with next communication to applicant.

[1] See Kind Codes of USPTO Patent Documents at www.USPTO.GOV or MPEP 901.04. [2] Enter office that issued the document, by the two-letter code (WIPO Standard ST.3). [3] For Japanese patent documents, the indication of the year of the reign of the Emperor must precede the serial number of the patent document. [4] Kind of document by the appropriate symbols as indicated on the document under WIPO Standard ST.16 if possible. [5] Applicant is to place a check mark here if English language translation is attached.

INFORMATION DISCLOSURE STATEMENT BY APPLICANT (Not for submission under 37 CFR 1.99)		
	Application Number	17870268
	Filing Date	2022-07-21
	First Named Inventor	Peter John Cousins
	Art Unit	1726
	Examiner Name	DEVINA PILLAY
	Attorney Docket Number	SKYW00056-1C US

CERTIFICATION STATEMENT

Please see 37 CFR 1.97 and 1.98 to make the appropriate selection(s):

That each item of information contained in the information disclosure statement was first cited in any communication from a foreign patent office in a counterpart foreign application not more than three months prior to the filing of the information disclosure statement. See 37 CFR 1.97(e)(1).

OR

☐ That no item of information contained in the information disclosure statement was cited in a communication from a foreign patent office in a counterpart foreign application, and, to the knowledge of the person signing the certification after making reasonable inquiry, no item of information contained in the information disclosure statement was known to any individual designated in 37 CFR 1.56(c) more than three months prior to the filing of the information disclosure statement. See 37 CFR 1.97(e)(2).

See attached certification statement.

The fee set forth in 37 CFR 1.17 (p) has been submitted herewith.

☒ A certification statement is not submitted herewith.

SIGNATURE

A signature of the applicant or representative is required in accordance with CFR 1.33, 10.18. Please see CFR 1.4(d) for the form of the signature.

Signature	/Jackson Ho/	Date (YYYY-MM-DD)	2023-02-16
Name/Print	Jackson Ho	Registration Number	72,360

This collection of information is required by 37 CFR 1.97 and 1.98. The information is required to obtain or retain a benefit by the public which is to file (and by the USPTO to process) an application. Confidentiality is governed by 35 U.S.C. 122 and 37 CFR 1.14. This collection is estimated to take 1 hour to complete, including gathering, preparing and submitting the completed application form to the USPTO. Time will vary depending upon the individual case. Any comments on the amount of time you require to complete this form and/or suggestions for reducing this burden, should be sent to the Chief Information Officer, U.S. Patent and Trademark Office, U.S. Department of Commerce, P.O. Box 1450, Alexandria, VA 22313-1450. DO NOT SEND FEES OR COMPLETED FORMS TO THIS ADDRESS. **SEND TO: Commissioner for Patents, P.O. Box 1450, Alexandria, VA 22313-1450.**

Privacy Act Statement

The Privacy Act of 1974 (P.L. 93-579) requires that you be given certain information in connection with your submission of the attached form related to a patent application or patent. Accordingly, pursuant to the requirements of the Act, please be advised that: (1) the general authority for the collection of this information is 35 U.S.C. 2(b)(2); (2) furnishing of the information solicited is voluntary; and (3) the principal purpose for which the information is used by the U.S. Patent and Trademark Office is to process and/or examine your submission related to a patent application or patent. If you do not furnish the requested information, the U.S. Patent and Trademark Office may not be able to process and/or examine your submission, which may result in termination of proceedings or abandonment of the application or expiration of the patent.

The information provided by you in this form will be subject to the following routine uses:

1. The information on this form will be treated confidentially to the extent allowed under the Freedom of Information Act (5 U.S.C. 552) and the Privacy Act (5 U.S.C. 552a). Records from this system of records may be disclosed to the Department of Justice to determine whether the Freedom of Information Act requires disclosure of these record s.

2. A record from this system of records may be disclosed, as a routine use, in the course of presenting evidence to a court, magistrate, or administrative tribunal, including disclosures to opposing counsel in the course of settlement negotiations.

3. A record in this system of records may be disclosed, as a routine use, to a Member of Congress submitting a request involving an individual, to whom the record pertains, when the individual has requested assistance from the Member with respect to the subject matter of the record.

4. A record in this system of records may be disclosed, as a routine use, to a contractor of the Agency having need for the information in order to perform a contract. Recipients of information shall be required to comply with the requirements of the Privacy Act of 1974, as amended, pursuant to 5 U.S.C. 552a(m).

5. A record related to an International Application filed under the Patent Cooperation Treaty in this system of records may be disclosed, as a routine use, to the International Bureau of the World Intellectual Property Organization, pursuant to the Patent Cooperation Treaty.

6. A record in this system of records may be disclosed, as a routine use, to another federal agency for purposes of National Security review (35 U.S.C. 181) and for review pursuant to the Atomic Energy Act (42 U.S.C. 218(c)).

7. A record from this system of records may be disclosed, as a routine use, to the Administrator, General Services, or his/her designee, during an inspection of records conducted by GSA as part of that agency's responsibility to recommend improvements in records management practices and programs, under authority of 44 U.S.C. 2904 and 2906. Such disclosure shall be made in accordance with the GSA regulations governing inspection of records for this purpose, and any other relevant (i.e., GSA or Commerce) directive. Such disclosure shall not be used to make determinations about individuals.

8. A record from this system of records may be disclosed, as a routine use, to the public after either publication of the application pursuant to 35 U.S.C. 122(b) or issuance of a patent pursuant to 35 U.S.C. 151. Further, a record may be disclosed, subject to the limitations of 37 CFR 1.14, as a routine use, to the public if the record was filed in an application which became abandoned or in which the proceedings were terminated and which application is referenced by either a published application, an application open to public inspections or an issued patent.

9. A record from this system of records may be disclosed, as a routine use, to a Federal, State, or local law enforcement agency, if the USPTO becomes aware of a violation or potential violation of law or regulation.

Electronic Acknowledgement Receipt

EFS ID:	47540157
Application Number:	17870268
International Application Number:	
Confirmation Number:	1086
Title of Invention:	FRONT CONTACT SOLAR CELL WITH FORMED EMITTER
First Named Inventor/Applicant Name:	Peter John COUSINS
Customer Number:	188295
Filer:	Jackson Ho/Julie Fosnaugh
Filer Authorized By:	Jackson Ho
Attorney Docket Number:	SKYW00056-1C US
Receipt Date:	16-FEB-2023
Filing Date:	21-JUL-2022
Time Stamp:	18:07:42
Application Type:	Utility under 35 USC 111(a)

Payment information:

Submitted with Payment	no

File Listing:

Document Number	Document Description	File Name	File Size(Bytes)/ Message Digest	Multi Part /.zip	Pages (if appl.)
1	Foreign Reference	JP07106611A.pdf	783652 0d5f4821411398c9351faffc123aea3c94139c67	no	12

Warnings:

Information:					
2	Foreign Reference	WO2009094578A2.pdf	526695 31ae04d32eacbd7e662d477e2a0c2675f2a796e3	no	14
Warnings:					
Information:					
3	Foreign Reference	WO2009094570A2.pdf	478543 50b68835a84aefbc3dc9e129b90bcadedd673fcc	no	14
Warnings:					
Information:					
4	Other reference-Patent/Application/ Search Documents	USSN_61023342_EF.pdf	9668411 f91371d14401b795b583cce1c5c5d40056fd177c	no	18
Warnings:					
Information:					
5	Non Patent Literature	Kray_NPL.pdf	688975 1d52abc8187482eb0bc31cc1ceb6b86aab65d1ef	no	7
Warnings:					
Information:					
6	Non Patent Literature	Chuang_SIPOS_NPL.pdf	704714 661ac174e969e2bd766e0cee66f520e3afadb770	no	8
Warnings:					
Information:					
7	Non Patent Literature	Green_HighEfficiency_NPL.pdf	718798 a619377283b622c49e65ec63967b0a1d9f96bdc2	no	5
Warnings:					
Information:					
8	Non Patent Literature	Osipov_NPL.pdf	783941 b47c2a69409a65c5a100fa0908402ef42619b36f	no	8
Warnings:					
Information:					

9	Non Patent Literature	Shewchun_MIS_SIS_NPL.pdf	1073866 21df1f57f53ee735897a92e476b4917b6c97b1a3	no	12
Warnings:					
Information:					
10	Information Disclosure Statement (IDS) Form (SB08)	S01234US4_SKYW00056-1CUS_IDS1_02162023_EF.pdf	1266766 b677f8c25b6db0d2ba924bbab22f63eec5a520ef	no	11
Warnings:					
Information:					
11	Non Patent Literature	Gan_NPL.pdf	15740074 9105bc671a6177d9950128a192aaad935c609b98	no	147
Warnings:					
Information:					
			Total Files Size (in bytes):	32434435	

This Acknowledgement Receipt evidences receipt on the noted date by the USPTO of the indicated documents, characterized by the applicant, and including page counts, where applicable. It serves as evidence of receipt similar to a Post Card, as described in MPEP 503.

<u>New Applications Under 35 U.S.C. 111</u>
If a new application is being filed and the application includes the necessary components for a filing date (see 37 CFR 1.53(b)-(d) and MPEP 506), a Filing Receipt (37 CFR 1.54) will be issued in due course and the date shown on this Acknowledgement Receipt will establish the filing date of the application.
<u>National Stage of an International Application under 35 U.S.C. 371</u>
If a timely submission to enter the national stage of an international application is compliant with the conditions of 35 U.S.C. 371 and other applicable requirements a Form PCT/DO/EO/903 indicating acceptance of the application as a national stage submission under 35 U.S.C. 371 will be issued in addition to the Filing Receipt, in due course.
<u>New International Application Filed with the USPTO as a Receiving Office</u>
If a new international application is being filed and the international application includes the necessary components for an international filing date (see PCT Article 11 and MPEP 1810), a Notification of the International Application Number and of the International Filing Date (Form PCT/RO/105) will be issued in due course, subject to prescriptions concerning national security, and the date shown on this Acknowledgement Receipt will establish the international filing date of the application.

UNITED STATES PATENT AND TRADEMARK OFFICE

UNITED STATES DEPARTMENT OF COMMERCE
United States Patent and Trademark Office
Address: COMMISSIONER FOR PATENTS
P.O. Box 1450
Alexandria, Virginia 22313-1450
www.uspto.gov

APPLICATION NO.	FILING DATE	FIRST NAMED INVENTOR	ATTORNEY DOCKET NO.	CONFIRMATION NO.
17/870,268	07/21/2022	Peter John COUSINS	SKYW00056-1C US	1086

188295 7590 02/20/2024
Schmidt Patent Law, Inc.
2635 N. First Street
Suite 150
San Jose, CA 95134-2000

EXAMINER
PILLAY, DEVINA

ART UNIT	PAPER NUMBER
1726	

NOTIFICATION DATE	DELIVERY MODE
02/20/2024	ELECTRONIC

Please find below and/or attached an Office communication concerning this application or proceeding.

The time period for reply, if any, is set in the attached communication.

Notice of the Office communication was sent electronically on above-indicated "Notification Date" to the following e-mail address(es):

docketing@spatentlaw.com

Office Action Summary	Application No. 17/870,268	Applicant(s) COUSINS, Peter John	
	Examiner DEVINA PILLAY	Art Unit 1726	AIA (FITF) Status No

-- The MAILING DATE of this communication appears on the cover sheet with the correspondence address --

Period for Reply

A SHORTENED STATUTORY PERIOD FOR REPLY IS SET TO EXPIRE 3 MONTHS FROM THE MAILING DATE OF THIS COMMUNICATION.

- Extensions of time may be available under the provisions of 37 CFR 1.136(a). In no event, however, may a reply be timely filed after SIX (6) MONTHS from the mailing date of this communication.
- If NO period for reply is specified above, the maximum statutory period will apply and will expire SIX (6) MONTHS from the mailing date of this communication.
- Failure to reply within the set or extended period for reply will, by statute, cause the application to become ABANDONED (35 U.S.C. § 133). Any reply received by the Office later than three months after the mailing date of this communication, even if timely filed, may reduce any earned patent term adjustment. See 37 CFR 1.704(b).

Status

1)☑ Responsive to communication(s) filed on 10/03/2022.

☐ A declaration(s)/affidavit(s) under **37 CFR 1.130(b)** was/were filed on _____.

2a)☐ This action is **FINAL.** 2b) ☑ This action is non-final.

3)☐ An election was made by the applicant in response to a restriction requirement set forth during the interview on _____; the restriction requirement and election have been incorporated into this action.

4)☐ Since this application is in condition for allowance except for formal matters, prosecution as to the merits is closed in accordance with the practice under *Ex parte Quayle*, 1935 C.D. 11, 453 O.G. 213.

Disposition of Claims*

5) ☑ Claim(s) 21-34 is/are pending in the application.

5a) Of the above claim(s) _____ is/are withdrawn from consideration.

6) ☐ Claim(s) _____ is/are allowed.

7) ☑ Claim(s) 21-34 is/are rejected.

8) ☐ Claim(s) _____ is/are objected to.

9) ☐ Claim(s) _____ are subject to restriction and/or election requirement

* If any claims have been determined allowable, you may be eligible to benefit from the **Patent Prosecution Highway** program at a participating intellectual property office for the corresponding application. For more information, please see http://www.uspto.gov/patents/init_events/pph/index.jsp or send an inquiry to **PPHfeedback@uspto.gov.**

Application Papers

10)☐ The specification is objected to by the Examiner.

11)☑ The drawing(s) filed on 07/21/2022 is/are: a)☑ accepted or b)☐ objected to by the Examiner.

Applicant may not request that any objection to the drawing(s) be held in abeyance. See 37 CFR 1.85(a).

Replacement drawing sheet(s) including the correction is required if the drawing(s) is objected to. See 37 CFR 1.121(d).

Priority under 35 U.S.C. § 119

12)☐ Acknowledgment is made of a claim for foreign priority under 35 U.S.C. § 119(a)-(d) or (f).

Certified copies:

a)☐ All b)☐ Some** c)☐ None of the:

1.☐ Certified copies of the priority documents have been received.

2.☐ Certified copies of the priority documents have been received in Application No. _____.

3.☐ Copies of the certified copies of the priority documents have been received in this National Stage application from the International Bureau (PCT Rule 17.2(a)).

** See the attached detailed Office action for a list of the certified copies not received.

Attachment(s)

1) ☑ Notice of References Cited (PTO-892)

2) ☑ Information Disclosure Statement(s) (PTO/SB/08a and/or PTO/SB/08b) Paper No(s)/Mail Date 02/16/2023.

3) ☐ Interview Summary (PTO-413) Paper No(s)/Mail Date _____.

4) ☐ Other: _____.

DETAILED ACTION

Notice of Pre-AIA or AIA Status

The present application is being examined under the pre-AIA first to invent provisions.

Claim Rejections - 35 USC § 103

In the event the determination of the status of the application as subject to AIA 35 U.S.C. 102 and 103 (or as subject to pre-AIA 35 U.S.C. 102 and 103) is incorrect, any correction of the statutory basis for the rejection will not be considered a new ground of rejection if the prior art relied upon, and the rationale supporting the rejection, would be the same under either status.

The following is a quotation of pre-AIA 35 U.S.C. 103(a) which forms the basis for all obviousness rejections set forth in this Office action:

> (a) A patent may not be obtained though the invention is not identically disclosed or described as set forth in section 102, if the differences between the subject matter sought to be patented and the prior art are such that the subject matter as a whole would have been obvious at the time the invention was made to a person having ordinary skill in the art to which said subject matter pertains. Patentability shall not be negatived by the manner in which the invention was made.

The factual inquiries for establishing a background for determining obviousness under pre-AIA 35 U.S.C. 103(a) are summarized as follows:

1. Determining the scope and contents of the prior art.

2. Ascertaining the differences between the prior art and the claims at issue.

3. Resolving the level of ordinary skill in the pertinent art.

4. Considering objective evidence present in the application indicating obviousness or nonobviousness.

Claims 21, 22, 26, 27, 30, 33, and 34 is/are rejected under pre-AIA 35 U.S.C. 103(a) as being unpatentable over Meier (US 6,262,359) in view of Jordan (US 2005/0268963 A1) in view of Okayasu (JP07-106611, Human Translation) in view of Borden (WO 2009/094578 A2).

Regarding claims 21, 22, 26, 27,34, Meier discloses a solar cell comprising (see Fig. 3D, C5/L38-C6/L55):

a n-type silicon substrate (218 n-type, C5/L30-42) having a front surface that faces the sun to collect solar radiation during normal operation and a back surface opposite the front surface;

an anti-reflection (214, silicon nitride, C6/L20-25) over the front surface of the solar cell;

a doped diffusion region in the front surface (216 high doped concentration area n+) of the substrate

a doped emitter layer (220 p-type) forming a backside junction with the substrate;

a front metal electrode (212, C7/L25-30) disposed over the front surface of the substrate;

a back metal electrode (222, C6/L25-30) disposed over the back surface of the substrate.

However, Meier does not disclose that there is a textured surface on the N-type silicon substrate on the front side of the solar cell.

Jordan discloses that the front surface of the solar cell is textured ([0022]). In addition, Jordan discloses that texturizing the front surface increases light absorption ([0022]).

It would have been obvious to one of ordinary skill in the art at the time of the invention to modify the front surface of Meier by texturizing the front surface as disclosed by Jordan because it increases light adsorption.

However, Meier does not disclose that the emitter is a polysilicon emitter and that there is a tunnel oxide formed between the emitter and the back surface of the substrate.

Okayasu discloses that instead of forming an emitter from a portion of a substrate which is doped, an emitter can be formed using a doped polysilicon layer ([0005] [0009], Abstract) and by forming an emitter this way the thickness can be more accurately controlled and it prevents generation of floating foreign matter ([0008] [0009]).

It would have been obvious to one of ordinary skill in the art at the time of the invention to replace the method of forming the emitter from a portion of a substrate of Meier and instead form the emitter by using a doped polysilicon layer as disclosed by Okayasu because the thickness can be more accurately controlled and it prevent generation of floating foreign matter.

However, modified Meier does not disclose a tunneling dielectric oxide between the emitter/front surface field and the substrate.

Borden discloses that tunnel oxides can be used in solar cells between doped polysilicon layers and monocrystalline substrates [0016].

Borden discloses that the tunnel oxide is SiO_2 which can be formed by a rapid thermal oxidation process ([0018], see Fig. 2A), and is around 12 Å.

Furthermore, Borden discloses that by providing the tunneling layer it prevents epitaxial growth of the emitter layer and further it protects the surface from plasma damage of the deposited emitter layer [0020].

It would have been obvious to one of ordinary skill in the art at the time of the invention to modify the interface between the doped polycrystalline emitter layer and monocrystalline substrate of modified Meier by having a tunneling oxide, SiO_2 of around 12 Å, at the interface as disclosed by Borden because it prevents epitaxial growth of the emitter layer and further it protects the crystalline surface from plasma damage of the deposited emitter layer.

Regarding claim 30, modified Meier discloses all of the claim limitations as set forth above.

Meier discloses that the front contact can be silver (212, C7/L10-15).

However, Meier does not disclose that the electrode that is in contact with the p-type polysilicon layer on the rear is silver.

Okayasu discloses that the back electrode on the polysilicon emitter is formed of a silver electrode [0044].

It would have been obvious to one of ordinary skill in the art at the time of the invention to replace the aluminum electrode of Meier with the silver electrode of Okayasu because one of ordinary skill in the art would have been able to carry out such a substitution, and the results would be reasonably predictable.

Regarding claim 33, modified Meier discloses all of the claim limitations as set forth above.

Meier discloses that thicknesses of the substrate for forming a solar cell is between 30-200 microns.

It would have been obvious to one of ordinary skill in the art at the time of the invention to modify the thickness from the tip of the textured front surface to the back surface to be within the range disclosed by Meier because Meier discloses that this is an appropriate thickness for a silicon solar cell.

It is also noted that according to MPEP 2131.03 and MPEP 2144.05, it would have been obvious to one of ordinary skill in the art at the time the invention was made to select the portion of the prior art's range which is within the range of applicant's claims because it has been held to be obvious to select a value in a known range by optimization for the best results. As to optimization results, a patent will not be granted based upon the optimization of result effective variables when the optimization is obtained through routine experimentation unless there is a showing of unexpected results which properly rebuts the *prima facie* case of obviousness. See *In re Boesch,* 617 F.2d 272, 276, 205 USPQ 215, 219 (CCPA 1980). See also *In re Woodruff,* 919 F.2d 1575, 1578, 16 USPQ2d 1934, 1936-37 (Fed. Cir. 1990).

Claims 23-25 and 28-29 is/are rejected under pre-AIA 35 U.S.C. 103(a) as being unpatentable over Meier (US 6,262,359) in view of Jordan (US 2005/0268963 A1) in view of Okayasu (JP07-106611, Human Translation) in view of Borden (WO 2009/094578 A2) as applied to claims 21, 22, 26, 27, 30, 33, and 34 above and in further view of Schmidt (Surface passivation of silicon solar cells using plasma-enhanced chemical-vapour-deposited SiN films and thin thermal SiO_2/plasma SiN stacks).

Regarding claims 23-25, modified Meier discloses all of the claim limitations as set forth above.

Meier discloses a SiN layer can be optionally grown on the front surface (see layer 214, C6/L20-25).

However, Meier does not disclose a silicon dioxide layer that is thermally grown having a thickness between 10-250 Å.

Schmidt discloses a silicon dioxide layer that is thermally grown (see section 2.3, 900°C) with thickness between approximately 50-300 Å under a silicon nitride layer on a doped silicon layer (see solar cell 4 or 5 in Table 1) on the front surface or the back surface.

It would have been obvious to one of ordinary skill in the art at the time of the invention to modify the silicon nitride layer on the front surface of Meier by replacing it with silicon oxide and silicon nitride stack as disclosed by Schmidt because it can improve solar cell and performance and/or because it is an equivalent structure for replacing a silicon nitride structure on the front surface of a doped silicon surface because Schmidt discloses it is an equivalent structure.

It would have been obvious to one of ordinary skill in the art at the time of invention to have selected the overlapping portion of the ranges disclosed by the reference because selection of overlapping portion of ranges has been held to be a prima facie case of obviousness. *In re Malagari*, 182 USPQ 549.

Regarding claims 28 and 29, modified Meier discloses all of the claim limitations as set forth above.

However, modified Meier does not disclose a passivation layer on the doped polysilicon emitter.

Schmidt discloses a silicon dioxide layer that is thermally grown (see section 2.3, 900°C) with thickness between approximately 50-300 Å under a silicon nitride layer on a doped silicon layer (see solar cell 4 or 5 in Table 1) on an emitter and further discloses that if this structure is constructed on the back surface rear surface contacts can pierce through the SiO_2/SiN layer stack to contact the emitter.

It would have been obvious to one of ordinary skill in the art at the time of the invention to modify the back surface of the polysilicon emitter Meier by passivating it with a silicon oxide and silicon nitride stack as disclosed by Schmidt because it can improve solar cell and performance and furthermore it would have been appropriate to provide openings in these layers so that the rear metal contacts can pierce through them as disclosed by Schmidt because it will allow for the rear contact to contact the doped silicon layer.

Claims 31 and 32 is/are rejected under pre-AIA 35 U.S.C. 103(a) as being unpatentable over Meier (US 6,262,359) in view of Jordan (US 2005/0268963 A1) in view of Okayasu (JP07-106611, Human Translation) in view of Borden (WO 2009/094578 A2) as applied to claims 21, 22, 26, 27, 30, 33, and 34 above and in further view of in view of Tsunomura (US 2008/0121266 A1).

Regarding claims 31 and 32, modified Meier discloses all of the claim limitations as set forth above.

However, modified Meier does not disclose two bus bars on the front which run perpendicular to electrodes and two bus bars on the rear of the cell.

Tsunomura discloses two bus bars on the front (20) which run perpendicular to electrodes (30) and two bus bars on the rear of the cell (20) (see Figs. 2 and 3) ([0029][0030]).

It would have been obvious to one of ordinary skill in the art at the time of the invention to modify the solar cell of Meier so that there are bus bars as disclosed by Tsunomura because it will improve the collection of photogenerated carriers because there are additional contacts and conductivity of the electrode.

Double Patenting

The nonstatutory double patenting rejection is based on a judicially created doctrine grounded in public policy (a policy reflected in the statute) so as to prevent the unjustified or improper timewise extension of the "right to exclude" granted by a patent and to prevent possible harassment by multiple assignees. A nonstatutory double patenting rejection is appropriate where the conflicting claims are not identical, but at least one examined application claim is not patentably distinct from the reference claim(s) because the examined application claim is either anticipated by, or would have been obvious over, the reference claim(s). See, e.g., *In re Berg*, 140 F.3d 1428, 46 USPQ2d 1226 (Fed. Cir. 1998); *In re Goodman*, 11 F.3d 1046, 29 USPQ2d 2010 (Fed. Cir. 1993); *In re Longi*, 759 F.2d 887, 225 USPQ 645 (Fed. Cir. 1985); *In re Van Ornum*, 686 F.2d 937, 214 USPQ 761 (CCPA 1982); *In re Vogel*, 422 F.2d 438, 164 USPQ 619 (CCPA 1970); *In re Thorington*, 418 F.2d 528, 163 USPQ 644 (CCPA 1969).

A timely filed terminal disclaimer in compliance with 37 CFR 1.321(c) or 1.321(d) may be used to overcome an actual or provisional rejection based on nonstatutory double patenting provided the reference application or patent either is shown to be

commonly owned with the examined application, or claims an invention made as a result of activities undertaken within the scope of a joint research agreement. See MPEP § 717.02 for applications subject to examination under the first inventor to file provisions of the AIA as explained in MPEP § 2159. See MPEP § 2146 *et seq.* for applications not subject to examination under the first inventor to file provisions of the AIA. A terminal disclaimer must be signed in compliance with 37 CFR 1.321(b).

The USPTO Internet website contains terminal disclaimer forms which may be used. Please visit www.uspto.gov/patent/patents-forms. The filing date of the application in which the form is filed determines what form (e.g., PTO/SB/25, PTO/SB/26, PTO/AIA/25, or PTO/AIA/26) should be used. A web-based eTerminal Disclaimer may be filled out completely online using web-screens. An eTerminal Disclaimer that meets all requirements is auto-processed and approved immediately upon submission. For more information about eTerminal Disclaimers, refer to www.uspto.gov/patents/process/file/efs/guidance/eTD-info-I.jsp.

Claims 21-34 are rejected on the ground of nonstatutory double patenting as being unpatentable over claims 1-12 of U.S. Patent No. 8,222,516 in view of Meier (US 6,262,359) in view of Borden (WO 2009/094578 A2) in view of Schmidt (Surface passivation of silicon solar cells using plasma-enhanced chemical-vapour-deposited SiN films and thin thermal SiO_2/plasma SiN stacks) in view of Tsunomura (US 2008/0121266 A1).

Although the claims at issue are not identical, they are not patentably distinct from each other because they recite a substantially similar structure for a solar cell with the exception of:

- the doped diffusion region in the silicon substrate (Meier)
- tunnel oxide thickness (SiO_2 of around 12 Å taught by Borden)
- bus bar structures connected to electrode (taught by Tsunomura)
- substrate thickness between 100-250 microns (taught by Meier)

It would have been obvious to one of ordinary skill in the art at the time of filing to modify the thickness of the substrate and the modify the front surface of the solar cell surface of claims 1-12 of U.S. Patent No. 8,222,516 as disclosed by Meier because doing so can improve solar cell performed (front surface field) and to modify the thickness from the tip of the textured front surface to the back surface to be within the range disclosed by Meier because Meier discloses that this is an appropriate thickness for a silicon solar cell.

It would have been obvious to one of ordinary skill in the art at the time of the invention to modify the solar cell of claims 1-12 of U.S. Patent No. 8,222,516 so that there are bus bars as disclosed by Tsunomura because it will improve the collection of photogenerated carriers because there are additional contacts and conductivity of the electrode.

It would have been obvious to one of ordinary skill in the art at the time of the invention to modify the interface between the doped polycrystalline emitter layer and monocrystalline substrate of claims 1-12 of U.S. Patent No. 8,222,516 by having a tunneling oxide, SiO_2 of around 12 Å, at the interface as disclosed by Borden because it prevents epitaxial growth of the emitter layer and further it protects the crystalline surface from plasma damage of the deposited emitter layer.

Conclusion

Any inquiry concerning this communication or earlier communications from the examiner should be directed to DEVINA PILLAY whose telephone number is (571)270-1180. The examiner can normally be reached Monday-Friday 9:30-6:00.

Examiner interviews are available via telephone, in-person, and video conferencing using a USPTO supplied web-based collaboration tool. To schedule an interview, applicant is encouraged to use the USPTO Automated Interview Request (AIR) at http://www.uspto.gov/interviewpractice.

If attempts to reach the examiner by telephone are unsuccessful, the examiner's supervisor, Jeffrey T Barton can be reached on 517-272-1307. The fax phone number for the organization where this application or proceeding is assigned is 571-273-8300.

Information regarding the status of published or unpublished applications may be obtained from Patent Center. Unpublished application information in Patent Center is available to registered users. To file and manage patent submissions in Patent Center, visit: https://patentcenter.uspto.gov. Visit https://www.uspto.gov/patents/apply/patent-center for more information about Patent Center and https://www.uspto.gov/patents/docx for information about filing in DOCX format. For additional questions, contact the Electronic Business Center (EBC) at 866-217-9197 (toll-free). If you would like assistance from a USPTO Customer Service Representative, call 800-786-9199 (IN USA OR CANADA) or 571-272-1000.

DEVINA PILLAY
Primary Examiner
Art Unit 1726

/DEVINA PILLAY/
Primary Examiner, Art Unit 1726

Notice of References Cited	Application/Control No. 17/870,268	Applicant(s)/Patent Under Reexamination COUSINS, Peter John	
	Examiner DEVINA PILLAY	Art Unit 1726	Page 1 of 1

U.S. PATENT DOCUMENTS

*		Document Number Country Code-Number-Kind Code	Date YYYY-MM-DD	Name	CPC Classification	US Classification
*	A	US-6262359-B1	07-2001	Meier; Daniel L.	H01L31/022425	136/258
*	B	US-20050268963-A1	12-2005	Jordan, David	B23K26/364	257/466
*	C	US-20080121266-A1	05-2008	Tsunomura; Yasufumi	H01L31/0516	136/244
	D					
	E					
	F					
	G					
	H					
	I					
	J					
	K					
	L					
	M					

FOREIGN PATENT DOCUMENTS

*		Document Number Country Code-Number-Kind Code	Date YYYY-MM-DD	Country	Name	CPC Classification
	N	JP-07106611-A	04-1995	JP	OKAYASU Y	
	O	WO-2009094578-A2	07-2009	WO	BORDEN P	H01L31/0745
	P					
	Q					
	R					
	S					
	T					

NON-PATENT DOCUMENTS

*		Include as applicable: Author, Title Date, Publisher, Edition or Volume, Pertinent Pages)
	U	Okayasu, JP07-106611, Human Translation (Year: 1995)
	V	Schmidt, Surface passivation of silicon solar cells using plasma-enhanced chemical-vapour-deposited SiN films and thin thermal SiO2/plasma SiN stacks" Semicond. Sci. Technol. 16 (2001) 164–170 (Year: 2001)
	W	
	X	

*A copy of this reference is not being furnished with this Office action. (See MPEP § 707.05(a).)
Dates in YYYY-MM-DD format are publication dates. Classifications may be US or foreign.

Search Notes	Application/Control No.	Applicant(s)/Patent Under Reexamination
	17/870,268	COUSINS, Peter John
	Examiner	**Art Unit**
	DEVINA PILLAY	1726

CPC - Searched*		
Symbol	**Date**	**Examiner**
H01L31/0236,0745,1804,022425,068,182,056	01/18/2023	DP
Y02E10/52,547	01/18/2023	DP
Y02P70/521	01/18/2023	DP

CPC Combination Sets - Searched*		
Symbol	**Date**	**Examiner**

US Classification - Searched*			
Class	**Subclass**	**Date**	**Examiner**

* See search history printout included with this form or the SEARCH NOTES box below to determine the scope of the search.

Search Notes		
Search Notes	**Date**	**Examiner**
Inventor and Assignee search	01/18/2023	DP
Search	01/18/2023	DP
CPC Search Text Limited	01/18/2023	DP

Interference Search			
US Class/CPC Symbol	**US Subclass/CPC Group**	**Date**	**Examiner**

PE2E SEARCH - Search History (Prior Art)

Ref #	Hits	Search Query	DBs	Default Operator	Plurals	British Equivalents	Time Stamp
L1	2	"20030134469"	(US-PGPUB; USPAT; USOCR; FPRS; EPO; JPO; DERWENT; IBM_TDB)	OR	ON	ON	2009/12/07 08:43 AM
L2	4	("2003/0134469").URPN.	(USPAT)	OR	ON	ON	2009/12/07 08:56 AM
L3	0	"10353261"	(USPAT)	OR	ON	ON	2009/12/07 08:57 AM
L4	1	"10/353261"	(USPAT)	OR	ON	ON	2009/12/07 08:57 AM
L5	19	("2999240" | "4001864" | "4104091" | "4133698" | "4142200" | "4152824" | "4156822" | "4201798" | "4377901" | "4478879" | "5013396" | "5543333" | "6096968" | "6136673" | "6146483" | "6206996" | "6278053").PN. OR ("6825104").URPN.	(US-PGPUB; USPAT; USOCR)	OR	ON	ON	2009/12/07 08:58 AM
L6	39	(back near surface near field) and texture and dielectric	(US-PGPUB; USPAT; USOCR)	OR	ON	ON	2009/12/07 08:58 AM
L7	18	(back near surface near field) and texture and dielectric and anti near reflective	(US-PGPUB; USPAT; USOCR)	OR	ON	ON	2009/12/07 09:06 AM
L8	18	(back near surface near field) and texture and dielectric and anti near reflective	(US-PGPUB; USPAT; USOCR; FPRS; EPO; JPO; DERWENT; IBM_TDB)	OR	ON	ON	2009/12/07 09:06 AM
L9	10	(back near surface near field) and texture and antireflective and emitter	(US-PGPUB; USPAT; USOCR)	OR	ON	ON	2009/12/07 09:09 AM
L10	65	texture and antireflective and emitter	(US-PGPUB; USPAT; USOCR)	OR	ON	ON	2009/12/07 09:09 AM
L11	66	texture and antireflective and emitter	(US-PGPUB; USPAT; USOCR; FPRS; EPO; JPO; DERWENT; IBM_TDB)	OR	ON	ON	2009/12/07 09:10 AM
L12	120	textur$4 and antireflective and emitter	(US-PGPUB; USPAT; USOCR; FPRS; EPO; JPO; DERWENT; IBM_TDB)	OR	ON	ON	2009/12/07 09:11 AM
L13	54	L12 not L11	(US-PGPUB; USPAT; USOCR; FPRS; EPO; JPO; DERWENT;	OR	ON	ON	2009/12/07 09:11 AM

			IBM_TDB)				
L14	18	L13 and dielectric	(US-PGPUB; USPAT; USOCR; FPRS; EPO; JPO; DERWENT; IBM_TDB)	OR	ON	ON	2009/12/07 09:12 AM
L15	3	"20070082206"	(US-PGPUB; USPAT; USOCR; FPRS; EPO; JPO; DERWENT; IBM_TDB)	OR	ON	ON	2009/12/07 09:17 AM
L16	443	dielectric and antireflective and emitter	(US-PGPUB; USPAT; USOCR; FPRS; EPO; JPO; DERWENT; IBM_TDB)	OR	ON	ON	2009/12/07 09:17 AM
L17	132	dielectric and antireflective and emitter and ((solar near cell) (photovoltaic))	(US-PGPUB; USPAT; USOCR; FPRS; EPO; JPO; DERWENT; IBM_TDB)	OR	ON	ON	2009/12/07 09:18 AM
L18	192	(back near surface near field) and dielectric	(US-PGPUB; USPAT; USOCR)	OR	ON	ON	2009/12/07 09:18 AM
L19	1	"20030134469"	(US-PGPUB; USPAT; USOCR)	OR	ON	ON	2009/12/07 09:28 AM
L20	19	("3413157" | "4012235" | "4239810" | "4313768" | "4604791" | "4624045" | "4633031" | "4781766" | "4836861" | "4910153" | "5879977" | "6111191").PN. OR ("6210991").URPN.	(US-PGPUB; USPAT; USOCR)	OR	ON	ON	2009/12/07 09:51 AM
L21	2	"20060196535"	(US-PGPUB; USPAT; USOCR)	OR	ON	ON	2009/12/07 09:55 AM
L22	14	("20030070707" | "4070097" | "4084099" | "4278831" | "4496788" | "5057439" | "5066340" | "5213628" | "5468652" | "5728230" | "6013582" | "6118258" | "6210991" | "6465724").PN. OR ("7554031").URPN.	(US-PGPUB; USPAT; USOCR)	OR	ON	ON	2009/12/07 10:13 AM
L23	346	dielectric and (antireflection or anti near reflection or ARC) and emitter and textur$5	(US-PGPUB; USPAT; USOCR)	OR	ON	ON	2009/12/07 10:17 AM
L24	347	dielectric and (antireflection or anti near reflection or ARC) and emitter and textur$5	(US-PGPUB; USPAT; USOCR; FPRS; EPO; JPO; DERWENT; IBM_TDB)	OR	ON	ON	2009/12/07 10:17 AM
L25	124	L23 and ((solar near cell) (photovoltaic))	(US-PGPUB; USPAT; USOCR; FPRS; EPO; JPO; DERWENT; IBM_TDB)	OR	ON	ON	2009/12/07 10:17 AM

L26	7	11/263159	(US-PGPUB; USPAT; USOCR; FPRS; EPO; JPO; DERWENT; IBM_TDB)	OR	ON	ON	2009/12/07 10:50 AM
L27	29	L24 and optoelectronic	(US-PGPUB; USPAT; USOCR; FPRS; EPO; JPO; DERWENT; IBM_TDB)	OR	ON	ON	2009/12/07 11:08 AM
L28	479	dielectric and (antireflection or anti near reflection or ARC) and (emitter or collector) and textur$5	(US-PGPUB; USPAT; USOCR)	OR	ON	ON	2009/12/07 11:09 AM
L29	133	L28 not L24	(US-PGPUB; USPAT; USOCR)	OR	ON	ON	2009/12/07 11:09 AM
L30	32	L29 and ((solar near cell) (photovoltaic))	(US-PGPUB; USPAT; USOCR; FPRS; EPO; JPO; DERWENT; IBM_TDB)	OR	ON	ON	2009/12/07 11:09 AM
L31	19	("4090213" | "4131486" | "4133698" | "4232245" | "4255211" | "4315097" | "4316049" | "4341918" | "4365262" | "4367368" | "4385198" | "4427839").PN. OR ("4665277").URPN.	(US-PGPUB; USPAT; USOCR)	OR	ON	ON	2009/12/07 11:32 AM
L32	14	("3150999" | "4227942" | "4348254").PN. OR ("4427839").URPN.	(US-PGPUB; USPAT; USOCR)	OR	ON	ON	2009/12/07 11:35 AM
L33	1092	(antireflection or anti near reflection or ARC) and emitter and textur$5	(US-PGPUB; USPAT; USOCR; FPRS; EPO; JPO; DERWENT; IBM_TDB)	OR	ON	ON	2009/12/07 11:47 AM
L34	233	L33 and (solar near cell)	(US-PGPUB; USPAT; USOCR; FPRS; EPO; JPO; DERWENT; IBM_TDB)	OR	ON	ON	2009/12/07 11:47 AM
L35	215	L34 not (L17)	(US-PGPUB; USPAT; USOCR; FPRS; EPO; JPO; DERWENT; IBM_TDB)	OR	ON	ON	2009/12/07 11:47 AM
L36	215	L35 not L29	(US-PGPUB; USPAT; USOCR; FPRS; EPO; JPO; DERWENT; IBM_TDB)	OR	ON	ON	2009/12/07 11:48 AM
L37	0	2004/0112426	(US-PGPUB; USPAT; USOCR; FPRS; EPO; JPO; DERWENT; IBM_TDB)	OR	ON	ON	2009/12/07 12:08 PM
L38	2	"20040112426"	(US-PGPUB; USPAT; USOCR; FPRS; EPO; JPO; DERWENT; IBM_TDB)	OR	ON	ON	2009/12/07 12:08 PM

L39	10	("20040200520" | "4234352" | "4478879" | "4920639" | "4927770" | "5053083" | "5320684" | "5538564" | "5641362" | "6624737").PN. OR ("7339110").URPN.	(US-PGPUB; USPAT; USOCR)	OR	ON	ON	2009/12/07 12:14 PM
L40	88	(back near surface near field) and antireflective and emitter	(US-PGPUB; USPAT; USOCR; FPRS; EPO; JPO; DERWENT; IBM_TDB)	OR	ON	ON	2009/12/07 12:23 PM
L41	175	(back near surface near field) and (antireflective ARC (anti near reflective)) and emitter	(US-PGPUB; USPAT; USOCR; FPRS; EPO; JPO; DERWENT; IBM_TDB)	OR	ON	ON	2009/12/07 12:24 PM
L42	87	L41 not L40	(US-PGPUB; USPAT; USOCR; FPRS; EPO; JPO; DERWENT; IBM_TDB)	OR	ON	ON	2009/12/07 12:24 PM
L43	138	L41 not L36	(US-PGPUB; USPAT; USOCR; FPRS; EPO; JPO; DERWENT; IBM_TDB)	OR	ON	ON	2009/12/07 12:24 PM
L44	26	("2841860" | "2854363" | "3134906" | "4070689" | "4341589" | "4428783" | "4523966" | "4665277" | "4703553" | "5156978").PN. OR ("5928438").URPN.	(US-PGPUB; USPAT; USOCR)	OR	ON	ON	2009/12/07 12:30 PM
L45	19	("4090213" | "4131486" | "4133698" | "4232245" | "4255211" | "4315097" | "4316049" | "4341918" | "4365262" | "4367368" | "4385198" | "4427839").PN. OR ("4665277").URPN.	(US-PGPUB; USPAT; USOCR)	OR	ON	ON	2009/12/07 01:00 PM
L46	11	("3081370" | "3757123" | "3948682" | "3969746").PN. OR ("4131486").URPN.	(US-PGPUB; USPAT; USOCR)	OR	ON	ON	2009/12/07 01:02 PM
L47	15	"5258077"	(US-PGPUB; USPAT; USOCR; FPRS; EPO; JPO; DERWENT; IBM_TDB)	OR	ON	ON	2009/12/07 02:11 PM
L48	14	("3895975" | "4056879" | "4106047" | "4131486" | "4226017" | "4916503" | "5538564" | "5641362" | "5951742" | "5973260" | "6071753").PN. OR ("6262359").URPN.	(US-PGPUB; USPAT; USOCR)	OR	ON	ON	2009/12/07 02:13 PM
L49	7	(back near junction) and (passiv$4 with	(US-PGPUB; USPAT; USOCR; FPRS; EPO;	OR	ON	ON	2009/12/07 03:25 PM

		"SiO.sub.2")	JPO; DERWENT; IBM_TDB)				
L50	10	(back with surface with field) and (passiv$4 with "SiO.sub.2")	(US-PGPUB; USPAT; USOCR; FPRS; EPO; JPO; DERWENT; IBM_TDB)	OR	ON	ON	2009/12/07 03:27 PM
L51	15	(passiv$4 with "SiO.sub.2" with emitter)	(US-PGPUB; USPAT; USOCR; FPRS; EPO; JPO; DERWENT; IBM_TDB)	OR	ON	ON	2009/12/07 03:28 PM
L52	1984	(passiv$4 with ("SiO.sub.2" or (silicon near dioxide)))	(US-PGPUB; USPAT; USOCR; FPRS; EPO; JPO; DERWENT; IBM_TDB)	OR	ON	ON	2009/12/07 03:31 PM
L53	67	(passiv$4 with ("SiO.sub.2" or (silicon near dioxide))) and solar near cell	(US-PGPUB; USPAT; USOCR; FPRS; EPO; JPO; DERWENT; IBM_TDB)	OR	ON	ON	2009/12/07 03:31 PM
L54	3	"20070082206"	(US-PGPUB; USPAT; USOCR; FPRS; EPO; JPO; DERWENT; IBM_TDB)	OR	ON	ON	2009/12/07 03:37 PM
L55	14	("3895975" | "4056879" | "4106047" | "4131486" | "4226017" | "4916503" | "5538564" | "5641362" | "5951742" | "5973260" | "6071753").PN. OR ("6262359").URPN.	(US-PGPUB; USPAT; USOCR)	OR	ON	ON	2009/12/07 04:00 PM
L56	163	(back near junction) and (solar near cell)	(US-PGPUB; USPAT; USOCR; FPRS; EPO; JPO; DERWENT; IBM_TDB)	OR	ON	ON	2009/12/07 04:13 PM
L57	141	(back near junction) and (photovoltaic)	(US-PGPUB; USPAT; USOCR; FPRS; EPO; JPO; DERWENT; IBM_TDB)	OR	ON	ON	2009/12/07 04:29 PM
L58	39	L57 not L56	(US-PGPUB; USPAT; USOCR; FPRS; EPO; JPO; DERWENT; IBM_TDB)	OR	ON	ON	2009/12/07 04:29 PM
L59	345	(back near2 junction) and (solar near cell or (photovoltaic))	(US-PGPUB; USPAT; USOCR; FPRS; EPO; JPO; DERWENT; IBM_TDB)	OR	ON	ON	2009/12/07 04:31 PM
L60	182	L59 not L56	(US-PGPUB; USPAT; USOCR; FPRS; EPO; JPO; DERWENT; IBM_TDB)	OR	ON	ON	2009/12/07 04:31 PM
L61	32	L60 and emitter	(US-PGPUB; USPAT; USOCR; FPRS; EPO; JPO; DERWENT; IBM_TDB)	OR	ON	ON	2009/12/07 04:31 PM
L62	16	(US-20050268963-$ or	(US-PGPUB; USPAT;	OR	ON	ON	2009/12/07

		US-20020153039-$ or US-20060196535-$ or US-20090101199-$ or US-20040097062-$ or US-20040112426-$ or US-20070186970-$).did. or (US-4379944-$ or US-4665277-$ or US-5320684-$ or US-6210991-$ or US-5792280-$ or US-5899704-$ or US-6262359-$ or US-5258077-$).did. or (US-20090205712-$).did.	DERWENT)				04:33 PM
L63	0	L62 and (isolation near2 trench)	(US-PGPUB; USPAT; USOCR; FPRS; EPO; JPO; DERWENT; IBM_TDB)	OR	ON	ON	2009/12/07 04:34 PM
L64	346	dielectric and (antireflection or anti near reflection or ARC) and emitter and textur$5	(US-PGPUB; USPAT; USOCR)	OR	ON	ON	2009/12/07 04:34 PM
L65	16	L64 and (isolation near trench)	(US-PGPUB; USPAT; USOCR)	OR	ON	ON	2009/12/07 04:34 PM
L66	251	solar near cell and (isolation near trench)	(US-PGPUB; USPAT; USOCR)	OR	ON	ON	2009/12/07 04:35 PM
L67	232	(back with surface with field) and (isolation near trench)	(US-PGPUB; USPAT; USOCR; FPRS; EPO; JPO; DERWENT; IBM_TDB)	OR	ON	ON	2009/12/07 04:36 PM
L68	2	L67 and solar near cell	(US-PGPUB; USPAT; USOCR; FPRS; EPO; JPO; DERWENT; IBM_TDB)	OR	ON	ON	2009/12/07 04:36 PM
L69	24	(back with surface with field) and (isolation near2 edge) and (solar near cell)	(US-PGPUB; USPAT; USOCR; FPRS; EPO; JPO; DERWENT; IBM_TDB)	OR	ON	ON	2009/12/07 04:40 PM
L70	49	("20030134469"|"20040200520"|"20040200520"|"20060130891"|"20070082206"|"3961997"|"3961997"|"4927770"|"4927770"|"5030295"|"5053083"|"5057439"|"5164019"|"5217539"|"5360990"|"5369291"|"5641362"|"5030295"|"5053083"|"5057439"|"5164019"|"5217539"|"5266125"|"5360990"|"5369291"|"5641362"|"6274402"|"6313395"|"6333457"|"6387	(US-PGPUB; USPAT; USOCR; FPRS; EPO; JPO; DERWENT; IBM_TDB)	OR	ON	ON	2009/12/07 04:54 PM

		726"|"6423568"|"6998288"|"6998288"|"6274402"|"6313395"|"6333457"|"6337283"|"6387726"|"6423568"|"6524880"|"6998288"|"7135350"|"7135350").PN.					
L71	288	oxide with passiv$5 with emitter	(US-PGPUB; USPAT; USOCR; FPRS; EPO; JPO; DERWENT; IBM_TDB)	OR	ON	ON	2009/12/07 05:00 PM
L72	32	L71 and ((solar near cell) photovoltaic)	(US-PGPUB; USPAT; USOCR; FPRS; EPO; JPO; DERWENT; IBM_TDB)	OR	ON	ON	2009/12/07 05:00 PM
L73	29	"4726850"	(US-PGPUB; USPAT; USOCR; FPRS; EPO; JPO; DERWENT; IBM_TDB)	OR	ON	ON	2009/12/07 05:29 PM
L74	0	(back with surface with field) and (isolat$3 near5 edge with trench) and (solar near cell)	(US-PGPUB; USPAT; USOCR; FPRS; EPO; JPO; DERWENT; IBM_TDB)	OR	ON	ON	2009/12/07 05:34 PM
L75	32	(back with surface with field) and (isolat$3 near5 edge) and (solar near cell)	(US-PGPUB; USPAT; USOCR; FPRS; EPO; JPO; DERWENT; IBM_TDB)	OR	ON	ON	2009/12/07 05:34 PM
L76	39	(back with surface with field) and (isolation near5 trench with etch)	(US-PGPUB; USPAT; USOCR; FPRS; EPO; JPO; DERWENT; IBM_TDB)	OR	ON	ON	2009/12/07 05:40 PM
L77	20	(solar near cell) and (isolation near5 trench with etch)	(US-PGPUB; USPAT; USOCR; FPRS; EPO; JPO; DERWENT; IBM_TDB)	OR	ON	ON	2009/12/07 05:41 PM
L78	304	(solar near cell) and (isolation near5 trench)	(US-PGPUB; USPAT; USOCR; FPRS; EPO; JPO; DERWENT; IBM_TDB)	OR	ON	ON	2009/12/07 05:42 PM
L79	7	(solar near cell) and (isolation near5 trench with edge)	(US-PGPUB; USPAT; USOCR; FPRS; EPO; JPO; DERWENT; IBM_TDB)	OR	ON	ON	2009/12/07 05:42 PM
L80	24	(trench with (electric$4 near isolat$4)) and emitter and (solar near cell)	(US-PGPUB; USPAT; USOCR; FPRS; EPO; JPO; DERWENT; IBM_TDB)	OR	ON	ON	2009/12/07 05:52 PM
L81	41	(silver near5 ("SiO.sub.2" or silicon near dioxide)) and (solar near cell) and emitter	(US-PGPUB; USPAT; USOCR; FPRS; EPO; JPO; DERWENT; IBM_TDB)	OR	ON	ON	2009/12/07 06:06 PM
L82	42	(silver near5 ("SiO.sub.2" or silicon	(US-PGPUB; USPAT; USOCR; FPRS; EPO;	OR	ON	ON	2009/12/07 06:07 PM

		near dioxide or passiv$4)) and (solar near cell) and emitter	JPO; DERWENT; IBM_TDB)				
L83	50	((silver or Ag) near5 ("SiO.sub.2" or silicon near dioxide or passiv$4)) and (solar near cell) and emitter	(US-PGPUB; USPAT; USOCR; FPRS; EPO; JPO; DERWENT; IBM_TDB)	OR	ON	ON	2009/12/07 06:07 PM
L84	44	((silver) near5 ("SiO.sub.2" or silicon near dioxide or passiv$4)) and ((solar near cell) or photovoltaic) and emitter	(US-PGPUB; USPAT; USOCR; FPRS; EPO; JPO; DERWENT; IBM_TDB)	OR	ON	ON	2009/12/07 06:08 PM
L85	90	((silver) near5 ("SiO.sub.2" or silicon near dioxide or passiv$4)) and ((solar near cell) or photovoltaic)	(US-PGPUB; USPAT; USOCR; FPRS; EPO; JPO; DERWENT; IBM_TDB)	OR	ON	ON	2009/12/07 06:09 PM
L86	46	L85 not L84	(US-PGPUB; USPAT; USOCR; FPRS; EPO; JPO; DERWENT; IBM_TDB)	OR	ON	ON	2009/12/07 06:09 PM
L87	105	((silver) near5 ("SiO.sub.2" or silicon near dioxide or passiv$4)) and ((solar near cell) or photovoltaic or optoelectronic)	(US-PGPUB; USPAT; USOCR; FPRS; EPO; JPO; DERWENT; IBM_TDB)	OR	ON	ON	2009/12/07 06:12 PM
L88	15	L87 not L85	(US-PGPUB; USPAT; USOCR; FPRS; EPO; JPO; DERWENT; IBM_TDB)	OR	ON	ON	2009/12/07 06:12 PM
L89	345	((silver) with ("SiO.sub.2" or silicon near dioxide or passiv$4)) and ((solar near cell) or photovoltaic or optoelectronic)	(US-PGPUB; USPAT; USOCR; FPRS; EPO; JPO; DERWENT; IBM_TDB)	OR	ON	ON	2009/12/07 06:13 PM
L90	240	L89 not L87	(US-PGPUB; USPAT; USOCR; FPRS; EPO; JPO; DERWENT; IBM_TDB)	OR	ON	ON	2009/12/07 06:13 PM
L91	14	("3150999" | "4227942" | "4348254").PN. OR ("4427839").URPN.	(US-PGPUB; USPAT; USOCR)	OR	ON	ON	2009/12/07 06:17 PM
L92	1122	silver with infrared with reflect$4	(US-PGPUB; USPAT; USOCR)	OR	ON	ON	2009/12/07 06:38 PM
L93	584	silver near5 infrared with reflect$4	(US-PGPUB; USPAT; USOCR)	OR	ON	ON	2009/12/07 06:38 PM

L94	565	silver near5 infrared near5 reflect$4	(US-PGPUB; USPAT; USOCR)	OR	ON	ON	2009/12/07 06:38 PM
L95	25	L94 and solar near cell	(US-PGPUB; USPAT; USOCR)	OR	ON	ON	2009/12/07 06:38 PM
L96	29	L94 and photovoltaic	(US-PGPUB; USPAT; USOCR)	OR	ON	ON	2009/12/07 06:41 PM
L97	18	"5479018"	(US-PGPUB; USPAT; USOCR)	OR	ON	ON	2009/12/07 06:56 PM
L98	1822	dichroic near coating	(US-PGPUB; USPAT; USOCR; FPRS; EPO; JPO; DERWENT; IBM_TDB)	OR	ON	ON	2009/12/08 07:20 AM
L99	54	dichroic near coating and (powder)	(US-PGPUB; USPAT; USOCR; FPRS; EPO; JPO; DERWENT; IBM_TDB)	OR	ON	ON	2009/12/08 07:21 AM
L100	296	(fluorescent near powder) and (light near5 film)	(US-PGPUB; USPAT; USOCR; FPRS; EPO; JPO; DERWENT; IBM_TDB)	OR	ON	ON	2009/12/08 07:22 AM
L101	1	6262359B1	(US-PGPUB; USPAT; USOCR; FPRS; EPO; JPO; DERWENT; IBM_TDB)	OR	ON	ON	2009/12/10 07:08 AM
L102	1	2000-587576.NRAN.	(DERWENT)	OR	ON	ON	2009/12/10 07:08 AM
L103	5	"6262359"	(US-PGPUB; USPAT; USOCR; FPRS; EPO; JPO; DERWENT; IBM_TDB)	OR	ON	ON	2009/12/10 07:08 AM
L104	14	("3895975" | "4056879" | "4106047" | "4131486" | "4226017" | "4916503" | "5538564" | "5641362" | "5951742" | "5973260" | "6071753").PN. OR ("6262359").URPN.	(US-PGPUB; USPAT; USOCR)	OR	ON	ON	2009/12/10 07:09 AM
L105	11	("3081370" | "3757123" | "3948682" | "3969746").PN. OR ("4131486").URPN.	(US-PGPUB; USPAT; USOCR)	OR	ON	ON	2009/12/10 07:09 AM
L106	12	("4090213" | "4131486" | "4133698" | "4232245" | "4255211" | "4315097" | "4316049" | "4341918" | "4365262" | "4367368" | "4385198" | "4427839").PN.	(US-PGPUB; USPAT; USOCR)	OR	ON	ON	2009/12/10 07:11 AM
L107	14	("3150999" | "4227942" | "4348254").PN. OR ("4427839").URPN.	(US-PGPUB; USPAT; USOCR)	OR	ON	ON	2009/12/10 07:11 AM
L108	19	("4090213" | "4131486" | "4133698" | "4232245"	(US-PGPUB; USPAT; USOCR)	OR	ON	ON	2009/12/10 07:11 AM

		| "4255211" | "4315097" | "4316049" | "4341918" | "4365262" | "4367368" | "4385198" | "4427839").PN. OR ("4665277").URPN.					
L109	9	floating same emitter same solar same cell	(US-PGPUB; USPAT; USOCR)	OR	ON	ON	2009/12/10 07:33 AM
L110	19	("4090213" | "4131486" | "4133698" | "4232245" | "4255211" | "4315097" | "4316049" | "4341918" | "4365262" | "4367368" | "4385198" | "4427839").PN. OR ("4665277").URPN.	(US-PGPUB; USPAT; USOCR)	OR	ON	ON	2009/12/10 07:35 AM
L111	7	"6262359"	(US-PGPUB; USPAT; USOCR; FPRS; EPO; JPO; DERWENT; IBM_TDB)	OR	ON	ON	2010/05/20 07:23 AM
L112	16	("3895975" | "4056879" | "4106047" | "4131486" | "4226017" | "4916503" | "5538564" | "5641362" | "5951742" | "5973260" | "6071753").PN. OR ("6262359").URPN.	(US-PGPUB; USPAT; USOCR)	OR	ON	ON	2010/05/20 07:23 AM
L113	4	L112 and polycrystal$4	(US-PGPUB; USPAT; USOCR)	OR	ON	ON	2010/05/20 07:23 AM
L114	9	("4377901" | "4478879" | "5082791" | "5665175").PN. OR ("6071753").URPN.	(US-PGPUB; USPAT; USOCR)	OR	ON	ON	2010/05/20 07:26 AM
L115	10	("20020011590" | "5103851" | "5437734" | "5738732" | "6071753" | "6130380" | "6166320" | "6548751").PN. OR ("6927417").URPN.	(US-PGPUB; USPAT; USOCR)	OR	ON	ON	2010/05/20 07:28 AM
L116	6	("4837607" | "5543333" | "5738732").PN. OR ("6130380").URPN.	(US-PGPUB; USPAT; USOCR)	OR	ON	ON	2010/05/20 07:29 AM
L117	414	polycrystalline near5 substrate same emitter	(US-PGPUB; USPAT; USOCR)	OR	ON	ON	2010/05/20 07:43 AM
L118	45	L117 and ((solar photovoltaic) near (battery device cell))	(US-PGPUB; USPAT; USOCR)	OR	ON	ON	2010/05/20 07:43 AM
L119	10	"4665277"	(US-PGPUB; USPAT; USOCR; FPRS; EPO; JPO; DERWENT; IBM_TDB)	OR	ON	ON	2010/05/20 08:39 AM
L120	1	"12070742"	(US-PGPUB; USPAT; USOCR; FPRS; EPO; JPO; DERWENT;	OR	ON	ON	2010/05/20 08:44 AM

			IBM_TDB)				
L121	1	"12070742"	(US-PGPUB; USPAT; USOCR; FPRS; EPO; JPO; DERWENT; IBM_TDB)	OR	ON	ON	2012/03/15 01:12 PM
L122	41	polysilicon near2 emitter and (photovoltaic solar near2 (Cell device battery))	(US-PGPUB; USPAT; USOCR; FPRS; EPO; JPO; DERWENT; IBM_TDB)	OR	OFF	OFF	2012/03/15 01:28 PM
L123	18	"4989059"	(US-PGPUB; USPAT; USOCR; FPRS; EPO; JPO; DERWENT; IBM_TDB)	OR	OFF	OFF	2012/03/15 01:34 PM
L124	50	(polysilicon polycrystalline) near2 emitter and (photovoltaic solar near2 (Cell device battery))	(US-PGPUB; USPAT; USOCR; FPRS; EPO; JPO; DERWENT; IBM_TDB)	OR	OFF	OFF	2012/03/15 01:35 PM
L125	9	L124 not L122	(US-PGPUB; USPAT; USOCR; FPRS; EPO; JPO; DERWENT; IBM_TDB)	OR	OFF	OFF	2012/03/15 01:35 PM
L126	343	(polysilicon polycrystalline) same emitter and (photovoltaic solar near2 (Cell device battery))	(US-PGPUB; USPAT; USOCR; FPRS; EPO; JPO; DERWENT; IBM_TDB)	OR	OFF	OFF	2012/03/15 01:37 PM
L127	297	(polysilicon polycrystalline) same emitter and (photovoltaic solar near2 (Cell device battery)) and (dielectric oxide)	(US-PGPUB; USPAT; USOCR; FPRS; EPO; JPO; DERWENT; IBM_TDB)	OR	OFF	OFF	2012/03/15 01:37 PM
L128	347591	(polysilicon polycrystalline) wiith emitter and (photovoltaic solar near2 (Cell device battery)) and (dielectric oxide)	(US-PGPUB; USPAT; USOCR; FPRS; EPO; JPO; DERWENT; IBM_TDB)	OR	OFF	OFF	2012/03/15 01:37 PM
L129	128	(polysilicon polycrystalline) with emitter and (photovoltaic solar near2 (Cell device battery)) and (dielectric oxide)	(US-PGPUB; USPAT; USOCR; FPRS; EPO; JPO; DERWENT; IBM_TDB)	OR	OFF	OFF	2012/03/15 01:37 PM
L130	86	L129 not L124	(US-PGPUB; USPAT; USOCR; FPRS; EPO; JPO; DERWENT; IBM_TDB)	OR	OFF	OFF	2012/03/15 01:38 PM

L131	2	"20090159111"	(US-PGPUB; USPAT; USOCR; FPRS; EPO; JPO; DERWENT; IBM_TDB)	OR	OFF	OFF	2012/03/15 01:43 PM
L132	6	"2008004791"	(US-PGPUB; USPAT; USOCR; FPRS; EPO; JPO; DERWENT; IBM_TDB)	OR	OFF	OFF	2012/03/15 01:46 PM
L133	10	"7468485"	(US-PGPUB; USPAT; USOCR; FPRS; EPO; JPO; DERWENT; IBM_TDB)	OR	OFF	OFF	2012/03/15 01:47 PM
L134	24	("3961997" | "4927770" | "5030295" | "5053083" | "5057439" | "5164019" | "5360990" | "5369291" | "5641362" | "6274402" | "6313395" | "6333457" | "6337283" | "6387726" | "6423568" | "6998288").PN. OR ("7468485").URPN.	(US-PGPUB; USPAT; USOCR)	OR	OFF	OFF	2012/03/15 01:49 PM
L135	14	"5057439"	(US-PGPUB; USPAT; USOCR)	OR	OFF	OFF	2012/03/15 01:55 PM
L136	1	"20090159111"	(US-PGPUB; USPAT; USOCR)	OR	OFF	OFF	2012/03/15 01:55 PM
L137	23	("4090213" | "4131486" | "4133698" | "4232245" | "4255211" | "4315097" | "4316049" | "4341918" | "4365262" | "4367368" | "4385198" | "4427839").PN. OR ("4665277").URPN.	(US-PGPUB; USPAT; USOCR)	OR	OFF	OFF	2012/03/15 01:58 PM
L138	0	L129 not L126	(US-PGPUB; USPAT; USOCR; FPRS; EPO; JPO; DERWENT; IBM_TDB)	OR	OFF	OFF	2012/03/15 02:03 PM
L139	215	L126 not L129	(US-PGPUB; USPAT; USOCR; FPRS; EPO; JPO; DERWENT; IBM_TDB)	OR	OFF	OFF	2012/03/15 02:03 PM
L140	74	emitter and (photovoltaic solar near2 (Cell device battery)) and tunnel near oxide	(US-PGPUB; USPAT; USOCR; FPRS; EPO; JPO; DERWENT; IBM_TDB)	OR	OFF	OFF	2012/03/15 02:04 PM
L141	75	emitter and (photovoltaic solar near2 (Cell device battery)) and tunnel$3 near oxide	(US-PGPUB; USPAT; USOCR; FPRS; EPO; JPO; DERWENT; IBM_TDB)	OR	OFF	OFF	2012/03/15 02:10 PM
L142	1	L141 not L140	(US-PGPUB; USPAT; USOCR; FPRS; EPO;	OR	OFF	OFF	2012/03/15 02:10 PM

			JPO; DERWENT; IBM_TDB)				
L143	222	emitter and (photovoltaic solar near2 (Cell device battery)) and tunnel$3 near5 (oxide barrier)	(US-PGPUB; USPAT; USOCR; FPRS; EPO; JPO; DERWENT; IBM_TDB)	OR	OFF	OFF	2012/03/15 02:11 PM
L144	147	L143 not L141	(US-PGPUB; USPAT; USOCR; FPRS; EPO; JPO; DERWENT; IBM_TDB)	OR	OFF	OFF	2012/03/15 02:12 PM
L145	188	emitter and (photovoltaic solar near2 (Cell device battery)) and tunnel$3 near2 (oxide barrier)	(US-PGPUB; USPAT; USOCR; FPRS; EPO; JPO; DERWENT; IBM_TDB)	OR	OFF	OFF	2012/03/15 02:22 PM
L146	488	(photovoltaic solar near2 (Cell device battery)) and tunnel$3 near2 (oxide barrier)	(US-PGPUB; USPAT; USOCR; FPRS; EPO; JPO; DERWENT; IBM_TDB)	OR	OFF	OFF	2012/03/15 02:27 PM
L147	413	(photovoltaic solar near2 (Cell device battery)) and tunnel$3 near2 (oxide barrier) and silicon	(US-PGPUB; USPAT; USOCR; FPRS; EPO; JPO; DERWENT; IBM_TDB)	OR	OFF	OFF	2012/03/15 02:27 PM
L148	238	L147 not L145	(US-PGPUB; USPAT; USOCR; FPRS; EPO; JPO; DERWENT; IBM_TDB)	OR	OFF	OFF	2012/03/15 02:28 PM
L149	24	("3961997" | "4927770" | "5030295" | "5053083" | "5057439" | "5164019" | "5360990" | "5369291" | "5641362" | "6274402" | "6313395" | "6333457" | "6337283" | "6387726" | "6423568" | "6998288").PN. OR ("7468485").URPN.	(US-PGPUB; USPAT; USOCR)	OR	OFF	OFF	2012/03/15 02:32 PM
L150	0	Sah.in. and emittter	(US-PGPUB; USPAT; USOCR)	OR	OFF	OFF	2012/03/15 02:35 PM
L151	10	Sah.in. and emitter	(US-PGPUB; USPAT; USOCR)	OR	OFF	OFF	2012/03/15 02:35 PM
L152	23	("4090213" | "4131486" | "4133698" | "4232245" | "4255211" | "4315097" | "4316049" | "4341918" | "4365262" | "4367368" | "4385198" | "4427839").PN. OR ("4665277").URPN.	(US-PGPUB; USPAT; USOCR)	OR	OFF	OFF	2012/03/15 02:36 PM
L153	4089	(photovoltaic solar near2 (Cell device battery)) and	(US-PGPUB; USPAT; USOCR; FPRS; EPO; JPO; DERWENT;	OR	OFF	OFF	2012/03/15 02:39 PM

		(passivat$4 near2 oxide dielectric) and silicon and (passivat$4 near2 oxide dielectric) with (reflect$4 metal)	IBM_TDB)				
L154	11442	(photovoltaic solar near2 (Cell device battery)) and (passivat$4 near2 oxide dielectric) and silicon	(US-PGPUB; USPAT; USOCR; FPRS; EPO; JPO; DERWENT; IBM_TDB)	OR	OFF	OFF	2012/03/15 02:39 PM
L155	11442	(photovoltaic solar near2 (Cell device battery)) and ((passivat$4 near2 oxide) dielectric) and silicon	(US-PGPUB; USPAT; USOCR; FPRS; EPO; JPO; DERWENT; IBM_TDB)	OR	OFF	OFF	2012/03/15 02:40 PM
L156	11276	(photovoltaic solar near (Cell battery)) and ((passivat$4 near2 oxide) dielectric) and silicon	(US-PGPUB; USPAT; USOCR; FPRS; EPO; JPO; DERWENT; IBM_TDB)	OR	OFF	OFF	2012/03/15 02:40 PM
L157	4063	(photovoltaic solar near (Cell battery)) and ((passivat$4 near2 oxide) dielectric) and silicon and (passivat$4 near2 oxide dielectric) with (reflect$4 metal)	(US-PGPUB; USPAT; USOCR; FPRS; EPO; JPO; DERWENT; IBM_TDB)	OR	OFF	OFF	2012/03/15 02:40 PM
L158	612	(photovoltaic solar near (Cell battery)) and ((passivat$4 near2 oxide) dielectric) and silicon and (passivat$4 near2 oxide dielectric) with (reflect$4 metal) and tunnel$3	(US-PGPUB; USPAT; USOCR; FPRS; EPO; JPO; DERWENT; IBM_TDB)	OR	OFF	OFF	2012/03/15 02:40 PM
L159	612	(photovoltaic solar near (Cell battery)) and ((passivat$4 near2 oxide) dielectric) and silicon and (passivat$4 near2 oxide dielectric) with (reflect$4 metal) and tunnel$3 and silicon	(US-PGPUB; USPAT; USOCR; FPRS; EPO; JPO; DERWENT; IBM_TDB)	OR	OFF	OFF	2012/03/15 02:40 PM
L160	301	(photovoltaic solar near (Cell battery)) and ((passivat$4 near2 oxide) dielectric) and silicon and (passivat$4 near2 oxide dielectric) with (reflect$4 metal) and tunnel$3 and emitter	(US-PGPUB; USPAT; USOCR; FPRS; EPO; JPO; DERWENT; IBM_TDB)	OR	OFF	OFF	2012/03/15 02:41 PM
L161	301	L160 not L148	(US-PGPUB; USPAT;	OR	OFF	OFF	2012/03/15

			USOCR; FPRS; EPO; JPO; DERWENT; IBM_TDB)				02:41 PM
L162	8	"5956571"	(US-PGPUB; USPAT; USOCR; FPRS; EPO; JPO; DERWENT; IBM_TDB)	OR	OFF	OFF	2012/03/15 02:57 PM
L163	58	"4200472"	(US-PGPUB; USPAT; USOCR; FPRS; EPO; JPO; DERWENT; IBM_TDB)	OR	OFF	OFF	2012/03/15 02:58 PM
L164	2	"20060130891"	(US-PGPUB; USPAT; USOCR; FPRS; EPO; JPO; DERWENT; IBM_TDB)	OR	OFF	OFF	2012/03/15 02:59 PM
L165	50	Borden.in. and emitter	(US-PGPUB; USPAT; USOCR; FPRS; EPO; JPO; DERWENT; IBM_TDB)	OR	OFF	OFF	2012/03/15 03:00 PM
L166	13	"5057439"	(USPAT)	OR	OFF	OFF	2012/03/16 07:33 AM
L167	0	"20090159111"	(USPAT)	OR	OFF	OFF	2012/03/16 07:36 AM
L168	2	"20090159111"	(US-PGPUB; USPAT; USOCR; FPRS; EPO; JPO; DERWENT; IBM_TDB)	OR	OFF	OFF	2012/03/16 07:36 AM
L169	2	"20050268963"	(US-PGPUB; USPAT; USOCR; FPRS; EPO; JPO; DERWENT; IBM_TDB)	OR	OFF	OFF	2012/03/16 07:38 AM
L170	24	("3961997" | "4927770" | "5030295" | "5053083" | "5057439" | "5164019" | "5360990" | "5369291" | "5641362" | "6274402" | "6313395" | "6333457" | "6337283" | "6387726" | "6423568" | "6998288").PN. OR ("7468485").URPN.	(US-PGPUB; USPAT; USOCR)	OR	OFF	OFF	2012/03/16 07:45 AM
L171	14	("4403392" | "4502206").PN. OR ("5057439").URPN.	(US-PGPUB; USPAT; USOCR)	OR	OFF	OFF	2012/03/16 07:47 AM
L172	1	"20060096635"	(US-PGPUB; USPAT; USOCR)	OR	OFF	OFF	2012/03/16 07:49 AM
L173	1	"20090159111"	(US-PGPUB; USPAT; USOCR)	OR	OFF	OFF	2012/03/16 07:49 AM
L174	1	"20050268963"	(US-PGPUB; USPAT; USOCR)	OR	OFF	OFF	2012/03/16 07:54 AM
L175	114	polysilicon near emitter and native near oxide	(US-PGPUB; USPAT; USOCR)	OR	OFF	OFF	2012/03/16 08:12 AM
L176	2	polysilicon near emitter	(US-PGPUB; USPAT;	OR	OFF	OFF	2012/03/16

		and native near oxide and (photovoltaic and solar near2 (battery cell device))	USOCR)				08:13 AM
L177	367	polysilicon near emitter and "SiO.sub.2"	(US-PGPUB; USPAT; USOCR)	OR	OFF	OFF	2012/03/16 08:14 AM
L178	2	polysilicon near emitter and "SiO.sub.2" and (photovoltaic and solar near2 (battery cell device))	(US-PGPUB; USPAT; USOCR)	OR	OFF	OFF	2012/03/16 08:15 AM
L179	6	Borden.in. and polysilicon near emitter	(US-PGPUB; USPAT; USOCR)	OR	OFF	OFF	2012/03/16 08:15 AM
L180	10	polysilicon near emitter and (photovoltaic and solar near2 (battery cell device))	(US-PGPUB; USPAT; USOCR)	OR	OFF	OFF	2012/03/16 08:17 AM
L181	17	(polycyrstalline multicrystalline polysilicon) near2 emitter and (photovoltaic and solar near2 (battery cell device))	(US-PGPUB; USPAT; USOCR)	OR	OFF	OFF	2012/03/16 08:19 AM
L182	0	"2008004791"	(US-PGPUB; USPAT; USOCR)	OR	OFF	OFF	2012/03/16 08:27 AM
L183	2	"20080004791"	(US-PGPUB; USPAT; USOCR)	OR	OFF	OFF	2012/03/16 08:28 AM
L184	0	"2008004791"	(US-PGPUB; USPAT; USOCR)	OR	OFF	OFF	2012/03/16 08:28 AM
L185	6	"2008004791"	(US-PGPUB; USPAT; USOCR; FPRS; EPO; JPO; DERWENT; IBM_TDB)	OR	OFF	OFF	2012/03/16 08:28 AM
L186	3869	438/72.ccls. 438/57.ccls. 438/69.ccls. 438/97.ccls. 438/98.ccls. 257/461.ccls. 257/436.ccls.	(USPAT)	OR	OFF	OFF	2012/03/19 08:37 AM
L187	7338	438/72.ccls. 438/57.ccls. 438/69.ccls. 438/97.ccls. 438/98.ccls. 257/461.ccls. 257/436.ccls.	(US-PGPUB; USPAT; USOCR; FPRS; EPO; JPO; DERWENT; IBM_TDB)	OR	OFF	OFF	2012/03/19 08:37 AM
L188	552	L187 and emitter and (photovoltaic solar near (cell device battery))	(US-PGPUB; USPAT; USOCR; FPRS; EPO; JPO; DERWENT; IBM_TDB)	OR	OFF	OFF	2012/03/19 08:37 AM
L189	426	L188 and oxide	(US-PGPUB; USPAT; USOCR; FPRS; EPO;	OR	OFF	OFF	2012/03/19 08:38 AM

			JPO; DERWENT; IBM_TDB)				
L190	39	L188 and oxide and polysilicon	(US-PGPUB; USPAT; USOCR; FPRS; EPO; JPO; DERWENT; IBM_TDB)	OR	OFF	OFF	2012/03/19 08:38 AM
L191	419	L188 and oxide and silicon	(US-PGPUB; USPAT; USOCR; FPRS; EPO; JPO; DERWENT; IBM_TDB)	OR	OFF	OFF	2012/03/19 08:45 AM
L192	237	L188 and oxide and (light near incident front) near5 (contact wir$4 connect$4)	(US-PGPUB; USPAT; USOCR; FPRS; EPO; JPO; DERWENT; IBM_TDB)	OR	OFF	OFF	2012/03/19 08:46 AM
L193	12	L188 and oxide and (light near incident front) near5 (contact wir$4 connect$4) and tunnel$3 near5 oxide	(US-PGPUB; USPAT; USOCR; FPRS; EPO; JPO; DERWENT; IBM_TDB)	OR	OFF	OFF	2012/03/19 08:53 AM
L194	2	"12707042"	(US-PGPUB; USPAT; USOCR; FPRS; EPO; JPO; DERWENT; IBM_TDB)	OR	OFF	OFF	2013/09/11 10:10 AM
L195	16	"1270742"	(US-PGPUB; USPAT; USOCR; FPRS; EPO; JPO; DERWENT; IBM_TDB)	OR	OFF	OFF	2013/09/11 10:10 AM
L196	2	"12070742"	(US-PGPUB; USPAT; USOCR; FPRS; EPO; JPO; DERWENT; IBM_TDB)	OR	OFF	OFF	2013/09/11 10:10 AM
L197	31	("20030134469" | "20040200520" | "20050268963" | "20060130891" | "20060157103" | "20070082206" | "3961997" | "4427839" | "4665277" | "4927770" | "5030295" | "5053083" | "5057439" | "5164019" | "5217539" | "5266125" | "5360990" | "5369291" | "5449626" | "5479018" | "5641362" | "6262359" | "6274402" | "6313395" | "6333457" | "6337283" | "6387726" | "6423568" | "6524880" | "6998288" | "7135350").PN. OR ("8222516").URPN.	(US-PGPUB; USPAT; USOCR)	OR	ON	ON	2013/09/11 10:11 AM
L198	1	"20040055894"	(US-PGPUB; USPAT; USOCR)	OR	ON	ON	2013/09/11 10:26 AM
L199	2	"11915984"	(US-PGPUB; USPAT; USOCR)	OR	ON	ON	2013/09/11 10:26 AM

L200	2	"20090159111"	(US-PGPUB; USPAT; USOCR; FPRS; EPO; JPO; DERWENT; IBM_TDB)	OR	ON	ON	2013/09/11 10:32 AM
L201	42	("3961997" | "4927770" | "5030295" | "5053083" | "5057439" | "5164019" | "5360990" | "5369291" | "5641362" | "6274402" | "6313395" | "6333457" | "6337283" | "6387726" | "6423568" | "6998288").PN. OR ("7468485").URPN.	(US-PGPUB; USPAT; USOCR)	OR	ON	ON	2013/09/11 10:35 AM
L202	26	"5057439"	(US-PGPUB; USPAT; USOCR)	OR	ON	ON	2013/09/11 10:41 AM
L203	26	("4403392" | "4502206").PN. OR ("5057439").URPN.	(US-PGPUB; USPAT; USOCR)	OR	ON	ON	2013/09/11 10:42 AM
L204	1	"12983846"	(US-PGPUB; USPAT; USOCR)	OR	ON	ON	2013/09/11 10:50 AM
L205	33	polysilicon near emitter and (solar photovoltaic).ab.	(US-PGPUB; USPAT; USOCR; FPRS; EPO; JPO; DERWENT; IBM_TDB)	OR	ON	ON	2013/09/11 10:51 AM
L206	3	"7468482"	(US-PGPUB; USPAT; USOCR; FPRS; EPO; JPO; DERWENT; IBM_TDB)	OR	ON	ON	2013/09/11 10:54 AM
L207	30	"7468485"	(US-PGPUB; USPAT; USOCR; FPRS; EPO; JPO; DERWENT; IBM_TDB)	OR	ON	ON	2013/09/11 10:54 AM
L208	2	"20090288704"	(US-PGPUB; USPAT; USOCR; FPRS; EPO; JPO; DERWENT; IBM_TDB)	OR	ON	ON	2013/09/11 11:01 AM
L209	1	2009-P84539.NRAN.	(DERWENT)	OR	ON	ON	2013/09/11 11:01 AM
L210	3	"20070256728"	(US-PGPUB; USPAT; USOCR; FPRS; EPO; JPO; DERWENT; IBM_TDB)	OR	ON	ON	2013/09/11 11:03 AM
L211	2074	polysilicon near emitter	(US-PGPUB; USPAT; USOCR; FPRS; EPO; JPO; DERWENT; IBM_TDB)	OR	ON	ON	2013/09/11 11:08 AM
L212	55	polysilicon near emitter and (solar photovoltaic)	(US-PGPUB; USPAT; USOCR; FPRS; EPO; JPO; DERWENT; IBM_TDB)	OR	ON	ON	2013/09/11 11:08 AM
L213	72	polysilicon near5 emitter and (solar	(US-PGPUB; USPAT; USOCR; FPRS; EPO;	OR	ON	ON	2013/09/11 11:14 AM

		photovoltaic)	JPO; DERWENT; IBM_TDB)				
L214	17	L213 not L212	(US-PGPUB; USPAT; USOCR; FPRS; EPO; JPO; DERWENT; IBM_TDB)	OR	ON	ON	2013/09/11 11:14 AM
L215	6	"2008004791"	(US-PGPUB; USPAT; USOCR; FPRS; EPO; JPO; DERWENT; IBM_TDB)	OR	ON	ON	2013/09/11 11:15 AM
L216	24	(polycyrstalline multicrystalline polysilicon) near2 emitter and (photovoltaic and solar near2 (battery cell device))	(US-PGPUB; USPAT; USOCR)	OR	OFF	OFF	2013/09/11 11:17 AM
L217	4	lindholm.in. and solar near cell	(US-PGPUB; USPAT; USOCR; FPRS; EPO; JPO; DERWENT; IBM_TDB)	OR	ON	ON	2013/09/11 11:54 AM
L218	0	lindholm.in. and "136."	(US-PGPUB; USPAT; USOCR; FPRS; EPO; JPO; DERWENT; IBM_TDB)	OR	ON	ON	2013/09/11 11:56 AM
L219	3	lindholm.in. and "136".clas.	(US-PGPUB; USPAT; USOCR; FPRS; EPO; JPO; DERWENT; IBM_TDB)	OR	ON	ON	2013/09/11 11:56 AM
L220	2	polysilicon near solar same emitter	(US-PGPUB; USPAT; USOCR; FPRS; EPO; JPO; DERWENT; IBM_TDB)	OR	ON	ON	2013/09/11 11:59 AM
L221	20	("3900943" | "4062038" | "4171997" | "4197141" | "4219368" | "4230508" | "4249957" | "4278473" | "4283589" | "4320168" | "4366338").PN. OR ("4431858").URPN.	(US-PGPUB; USPAT; USOCR)	OR	ON	ON	2013/09/11 12:00 PM
L222	6	("20030183270" | "20090255574" | "20090283138" | "3969163" | "4431858" | "4571448").PN. OR ("8283557").URPN.	(US-PGPUB; USPAT; USOCR)	OR	ON	ON	2013/09/11 12:02 PM
L223	26	("4403392" | "4502206").PN. OR ("5057439").URPN.	(US-PGPUB; USPAT; USOCR)	OR	ON	ON	2013/09/11 01:29 PM
L224	2	"12166266"	(US-PGPUB; USPAT; USOCR; FPRS; EPO; JPO; DERWENT; IBM_TDB)	OR	ON	ON	2013/09/11 01:43 PM
L225	395	polysilicon near5	(US-PGPUB; USPAT;	OR	ON	ON	2013/09/11

		emitter same oxide same dopant	USOCR; FPRS; EPO; JPO; DERWENT; IBM_TDB)				01:45 PM
L226	377	polysilicon near5 emitter same oxide with dop$3	(US-PGPUB; USPAT; USOCR; FPRS; EPO; JPO; DERWENT; IBM_TDB)	OR	ON	ON	2013/09/11 01:45 PM
L227	26	polysilicon near5 emitter same oxide with dop$3 same phosphorus	(US-PGPUB; USPAT; USOCR; FPRS; EPO; JPO; DERWENT; IBM_TDB)	OR	ON	ON	2013/09/11 01:45 PM
L228	6	"11201817"	(US-PGPUB; USPAT; USOCR; FPRS; EPO; JPO; DERWENT; IBM_TDB)	OR	ON	ON	2013/09/11 01:48 PM
L229	53	Swanson near Richard and solar near cell	(US-PGPUB; USPAT; USOCR; FPRS; EPO; JPO; DERWENT; IBM_TDB)	OR	ON	ON	2013/09/11 01:52 PM
L230	158	"5053083"	(US-PGPUB; USPAT; USOCR; FPRS; EPO; JPO; DERWENT; IBM_TDB)	OR	ON	ON	2013/09/11 01:53 PM
L231	38	("20040200520" | "4234352" | "4478879" | "4920639" | "4927770" | "5053083" | "5320684" | "5538564" | "5641362" | "6624737").PN. OR ("7339110").URPN.	(US-PGPUB; USPAT; USOCR)	OR	ON	ON	2013/09/11 02:03 PM
L232	687	phosphosilicate near glass same (dielectric oxide) with (passivation capping)	(US-PGPUB; USPAT; USOCR)	OR	ON	ON	2013/09/11 02:14 PM
L233	41	phosphosilicate near glass same (dielectric oxide) with (passivation capping) same polysilicon	(US-PGPUB; USPAT; USOCR)	OR	ON	ON	2013/09/11 02:15 PM
L234	0	"2008004791"	(US-PGPUB; USPAT; USOCR)	OR	ON	ON	2013/09/11 02:17 PM
L235	2	"20080004791"	(US-PGPUB; USPAT; USOCR)	OR	ON	ON	2013/09/11 02:17 PM
L236	59	"5693578"	(US-PGPUB; USPAT; USOCR)	OR	ON	ON	2013/09/11 02:17 PM
L237	11	(back near surface near field BSF) same polysilicon	(US-PGPUB; USPAT; USOCR)	OR	ON	ON	2013/09/11 02:19 PM
L238	14	(back near surface near field BSF) same polysilicon	(US-PGPUB; USPAT; USOCR; FPRS; EPO; JPO; DERWENT; IBM_TDB)	OR	ON	ON	2013/09/11 02:21 PM
L239	3	L238 not L237	(US-PGPUB; USPAT;	OR	ON	ON	2013/09/11

			USOCR; FPRS; EPO; JPO; DERWENT; IBM_TDB)				02:21 PM
L240	81	(back near surface near field BSF) same polycrystalline near silicon	(US-PGPUB; USPAT; USOCR; FPRS; EPO; JPO; DERWENT; IBM_TDB)	OR	ON	ON	2013/09/11 02:23 PM
L241	81	L240 not L238	(US-PGPUB; USPAT; USOCR; FPRS; EPO; JPO; DERWENT; IBM_TDB)	OR	ON	ON	2013/09/11 02:23 PM
L242	157	(back near surface near field BSF) and polysilicon	(US-PGPUB; USPAT; USOCR; FPRS; EPO; JPO; DERWENT; IBM_TDB)	OR	ON	ON	2013/09/11 02:35 PM
L243	143	L242 not L238	(US-PGPUB; USPAT; USOCR; FPRS; EPO; JPO; DERWENT; IBM_TDB)	OR	ON	ON	2013/09/11 02:35 PM
L244	476	(back near surface near field BSF) same passivat$4 and (solar photovoltaic).ab.	(US-PGPUB; USPAT; USOCR; FPRS; EPO; JPO; DERWENT; IBM_TDB)	OR	ON	ON	2013/09/11 02:45 PM
L245	108	(back near surface near field BSF) same passivat$4 and (solar photovoltaic).ab. and heterojunction	(US-PGPUB; USPAT; USOCR; FPRS; EPO; JPO; DERWENT; IBM_TDB)	OR	ON	ON	2013/09/11 02:45 PM
L246	26	"4315097"	(US-PGPUB; USPAT; USOCR; FPRS; EPO; JPO; DERWENT; IBM_TDB)	OR	ON	ON	2013/09/11 03:00 PM
L247	2	"20040205520"	(US-PGPUB; USPAT; USOCR; FPRS; EPO; JPO; DERWENT; IBM_TDB)	OR	ON	ON	2013/09/11 03:02 PM
L248	3	"20040200520"	(US-PGPUB; USPAT; USOCR; FPRS; EPO; JPO; DERWENT; IBM_TDB)	OR	ON	ON	2013/09/11 03:02 PM
L249	25	(back near surface near field BSF) same passivat$4 and (solar photovoltaic).ab. and polysilicon	(US-PGPUB; USPAT; USOCR; FPRS; EPO; JPO; DERWENT; IBM_TDB)	OR	ON	ON	2013/09/11 03:09 PM
L250	717	(back near surface near field BSF) same (capping oxide dielectric passivat$4) and (solar photovoltaic).ab.	(US-PGPUB; USPAT; USOCR; FPRS; EPO; JPO; DERWENT; IBM_TDB)	OR	ON	ON	2013/09/11 03:10 PM
L251	75	(back near surface near field BSF) same (capping oxide dielectric passivat$4) and (solar	(US-PGPUB; USPAT; USOCR; FPRS; EPO; JPO; DERWENT; IBM_TDB)	OR	ON	ON	2013/09/11 03:11 PM

		photovoltaic).ab. and Phosphosilicate					
L252	114	(back near surface near field BSF) same (capping oxide dielectric passivat$4) and (solar photovoltaic).ab. and (Phosphosilicate PSG)	(US-PGPUB; USPAT; USOCR; FPRS; EPO; JPO; DERWENT; IBM_TDB)	OR	ON	ON	2013/09/11 03:16 PM
L253	39	L252 not L251	(US-PGPUB; USPAT; USOCR; FPRS; EPO; JPO; DERWENT; IBM_TDB)	OR	ON	ON	2013/09/11 03:16 PM
L254	158	(back near surface near field BSF) same (capping oxide dielectric passivat$4) and (Phosphosilicate PSG)	(US-PGPUB; USPAT; USOCR; FPRS; EPO; JPO; DERWENT; IBM_TDB)	OR	ON	ON	2013/09/11 03:18 PM
L255	44	L254 not L252	(US-PGPUB; USPAT; USOCR; FPRS; EPO; JPO; DERWENT; IBM_TDB)	OR	ON	ON	2013/09/11 03:18 PM
L256	1163	(back near surface near field BSF) same (capping oxide dielectric passivat$4)	(US-PGPUB; USPAT; USOCR; FPRS; EPO; JPO; DERWENT; IBM_TDB)	OR	ON	ON	2013/09/11 03:20 PM
L257	727	(back near surface near field BSF) same (capping oxide dielectric passivat$4) and (solar photovoltaic photoelectric).ab.	(US-PGPUB; USPAT; USOCR; FPRS; EPO; JPO; DERWENT; IBM_TDB)	OR	ON	ON	2013/09/11 03:21 PM
L258	33	(back near surface near field BSF) same (capping oxide dielectric passivat$4) and (solar photovoltaic photoelectric).ab. and polysilicon	(US-PGPUB; USPAT; USOCR; FPRS; EPO; JPO; DERWENT; IBM_TDB)	OR	ON	ON	2013/09/11 03:21 PM
L259	703	polysilicon with PSG with (dielectric oxide)	(US-PGPUB; USPAT; USOCR; FPRS; EPO; JPO; DERWENT; IBM_TDB)	OR	ON	ON	2013/09/11 03:30 PM
L260	81	polysilicon with PSG with (dielectric oxide) and emitter	(US-PGPUB; USPAT; USOCR; FPRS; EPO; JPO; DERWENT; IBM_TDB)	OR	ON	ON	2013/09/11 03:31 PM
L261	225	polysilicon with PSG with (dielectric oxide) same dop$3	(US-PGPUB; USPAT; USOCR; FPRS; EPO; JPO; DERWENT; IBM_TDB)	OR	ON	ON	2013/09/11 03:33 PM
L262	2	polysilicon with PSG with (dielectric oxide) same dop$3 and (solar photovoltaic)	(US-PGPUB; USPAT; USOCR; FPRS; EPO; JPO; DERWENT; IBM_TDB)	OR	ON	ON	2013/09/11 03:34 PM

L263	44	polysilicon with PSG with (dielectric oxide) and (solar photovoltaic)	(US-PGPUB; USPAT; USOCR; FPRS; EPO; JPO; DERWENT; IBM_TDB)	OR	ON	ON	2013/09/11 03:34 PM
L264	161	(phosphosilicate PSG) with (dielectric oxide) same dop$4 and (solar photovoltaic)	(US-PGPUB; USPAT; USOCR; FPRS; EPO; JPO; DERWENT; IBM_TDB)	OR	ON	ON	2013/09/11 03:35 PM
L265	62	(phosphosilicate PSG) with (dielectric oxide) same dop$4 and (solar photovoltaic).ab.	(US-PGPUB; USPAT; USOCR; FPRS; EPO; JPO; DERWENT; IBM_TDB)	OR	ON	ON	2013/09/11 03:35 PM
L266	103	(phosphosilicate PSG borosilicate BSG) with (dielectric oxide) same dop$4 and (solar photovoltaic).ab.	(US-PGPUB; USPAT; USOCR; FPRS; EPO; JPO; DERWENT; IBM_TDB)	OR	ON	ON	2013/09/11 03:42 PM
L267	41	L266 not L265	(US-PGPUB; USPAT; USOCR; FPRS; EPO; JPO; DERWENT; IBM_TDB)	OR	ON	ON	2013/09/11 03:42 PM
L268	2	"20080173347"	(US-PGPUB; USPAT; USOCR; FPRS; EPO; JPO; DERWENT; IBM_TDB)	OR	ON	ON	2013/09/11 03:43 PM
L269	3	"20060196535"	(US-PGPUB; USPAT; USOCR; FPRS; EPO; JPO; DERWENT; IBM_TDB)	OR	ON	ON	2013/09/11 03:45 PM
L270	179	"4927770"	(US-PGPUB; USPAT; USOCR; FPRS; EPO; JPO; DERWENT; IBM_TDB)	OR	ON	ON	2013/09/11 03:46 PM
L271	57	(phosphosilicate PSG borosilicate BSG) with (dielectric oxide cap$4) same dop$4 and (back near surface near field BSF)	(US-PGPUB; USPAT; USOCR; FPRS; EPO; JPO; DERWENT; IBM_TDB)	OR	ON	ON	2013/09/11 03:50 PM
L272	145	(phosphosilicate PSG borosilicate BSG) with (dielectric oxide cap$4) and (back near surface near field BSF)	(US-PGPUB; USPAT; USOCR; FPRS; EPO; JPO; DERWENT; IBM_TDB)	OR	ON	ON	2013/09/11 03:52 PM
L273	0	L271 not L271	(US-PGPUB; USPAT; USOCR; FPRS; EPO; JPO; DERWENT; IBM_TDB)	OR	ON	ON	2013/09/11 03:52 PM
L274	88	L272 not L271	(US-PGPUB; USPAT; USOCR; FPRS; EPO; JPO; DERWENT; IBM_TDB)	OR	ON	ON	2013/09/11 03:53 PM
L275	190	(phosphosilicate PSG borosilicate BSG) with	(US-PGPUB; USPAT; USOCR; FPRS; EPO;	OR	ON	ON	2013/09/12 07:22 AM

		(dielectric oxide cap$4) with (dop$4) with (burn$4 escap$4 leav$4 diffus$4)	JPO; DERWENT; IBM_TDB)				
L276	130	(phosphosilicate PSG borosilicate BSG) with (dielectric "SiO.sub.2" silicon near oxide cap$4) with (dop$4) with (burn$4 escap$4 leav$4 diffus$4)	(US-PGPUB; USPAT; USOCR; FPRS; EPO; JPO; DERWENT; IBM_TDB)	OR	ON	ON	2013/09/12 07:28 AM
L277	341	(phosphosilicate PSG borosilicate BSG) with (dielectric "SiO.sub.2" silicon near oxide cap$4) and (solar photoelectric photovoltaic).ab.	(US-PGPUB; USPAT; USOCR; FPRS; EPO; JPO; DERWENT; IBM_TDB)	OR	ON	ON	2013/09/12 07:39 AM
L278	14	(phosphosilicate PSG borosilicate BSG) with (dielectric "SiO.sub.2" silicon near oxide cap$4) with (dop$4) with (burn$4 escap$4 leav$4 diffus$4) and (solar photoelectric photovoltaic).ab.	(US-PGPUB; USPAT; USOCR; FPRS; EPO; JPO; DERWENT; IBM_TDB)	OR	ON	ON	2013/09/12 07:42 AM
L279	23	(phosphosilicate PSG borosilicate BSG) with (dielectric "SiO.sub.2" silicon near oxide cap$4) with (dop$4) with (burn$4 escap$4 leav$4 diffus$4) and (solar photoelectric photovoltaic)	(US-PGPUB; USPAT; USOCR; FPRS; EPO; JPO; DERWENT; IBM_TDB)	OR	ON	ON	2013/09/12 07:44 AM
L280	18	(phosphosilicate PSG borosilicate BSG) with (cap$4) with (dop$4) and (solar photoelectric photovoltaic)	(US-PGPUB; USPAT; USOCR; FPRS; EPO; JPO; DERWENT; IBM_TDB)	OR	ON	ON	2013/09/12 07:46 AM
L281	35	("3895975" | "4056879" | "4106047" | "4131486" | "4226017" | "4916503" | "5538564" | "5641362" | "5951742" | "5973260" | "6071753").PN. OR ("6262359").URPN.	(US-PGPUB; USPAT; USOCR)	OR	ON	ON	2013/09/12 09:04 AM
L282	6	(oxide with tunnel) same (pn near junction) and (solar photovoltaic).ab.	(US-PGPUB; USPAT; USOCR; FPRS; EPO; JPO; DERWENT; IBM_TDB)	OR	ON	ON	2013/09/12 09:08 AM
L283	6	(oxide with tunnel$5) same (pn near junction) and (solar	(US-PGPUB; USPAT; USOCR; FPRS; EPO; JPO; DERWENT;	OR	ON	ON	2013/09/12 09:10 AM

		photovoltaic).ab.	IBM_TDB)				
L284	86	(oxide with tunnel$5) same (junction) and (solar photovoltaic).ab.	(US-PGPUB; USPAT; USOCR; FPRS; EPO; JPO; DERWENT; IBM_TDB)	OR	ON	ON	2013/09/12 09:10 AM
L285	80	L284 not L283	(US-PGPUB; USPAT; USOCR; FPRS; EPO; JPO; DERWENT; IBM_TDB)	OR	ON	ON	2013/09/12 09:10 AM
L286	3	"20070256728"	(US-PGPUB; USPAT; USOCR; FPRS; EPO; JPO; DERWENT; IBM_TDB)	OR	ON	ON	2013/09/12 09:12 AM
L287	52	"4272641"	(US-PGPUB; USPAT; USOCR; FPRS; EPO; JPO; DERWENT; IBM_TDB)	OR	ON	ON	2013/09/12 09:14 AM
L288	211	(oxide with tunnel$5) and (solar photovoltaic).ab.	(US-PGPUB; USPAT; USOCR; FPRS; EPO; JPO; DERWENT; IBM_TDB)	OR	ON	ON	2013/09/12 09:15 AM
L289	88	thin same (oxide with tunnel$5) and (solar photovoltaic).ab.	(US-PGPUB; USPAT; USOCR; FPRS; EPO; JPO; DERWENT; IBM_TDB)	OR	ON	ON	2013/09/12 09:15 AM
L290	87	L289 not L287	(US-PGPUB; USPAT; USOCR; FPRS; EPO; JPO; DERWENT; IBM_TDB)	OR	ON	ON	2013/09/12 09:15 AM
L291	1100	(oxide with tunnel$5) and (solar photovoltaic photoelectric)	(US-PGPUB; USPAT; USOCR; FPRS; EPO; JPO; DERWENT; IBM_TDB)	OR	ON	ON	2013/09/12 09:22 AM
L292	301	(oxide with tunnel$5) same (pn junction p-type n-type) and (solar photovoltaic photoelectric)	(US-PGPUB; USPAT; USOCR; FPRS; EPO; JPO; DERWENT; IBM_TDB)	OR	ON	ON	2013/09/12 09:24 AM
L293	243	(L292 not L289)	(US-PGPUB; USPAT; USOCR; FPRS; EPO; JPO; DERWENT; IBM_TDB)	OR	ON	ON	2013/09/12 09:24 AM
L294	7	"4495375"	(US-PGPUB; USPAT; USOCR; FPRS; EPO; JPO; DERWENT; IBM_TDB)	OR	ON	ON	2013/09/12 09:31 AM
L295	6	("3990097" | "4338482").PN. OR ("4495375").URPN.	(US-PGPUB; USPAT; USOCR)	OR	ON	ON	2013/09/12 09:31 AM
L296	24	("3559281" | "4013485" | "4062102" | "4253881" | "4403239" | "4404421" | "4404422" | "4495375" | "4640002" | "4806496"	(US-PGPUB; USPAT; USOCR)	OR	ON	ON	2013/09/12 09:32 AM

		| "4828628").PN. OR ("4891325").URPN.					
L297	60	"6998288"	(US-PGPUB; USPAT; USOCR; FPRS; EPO; JPO; DERWENT; IBM_TDB)	OR	ON	ON	2013/09/12 09:41 AM
L298	53	("20040200520" | "4927770" | "5053083" | "5164019" | "5217539" | "5360990" | "5369291" | "6274402" | "6313395" | "6333457" | "6337283" | "6387726" | "6423568").PN. OR ("6998288").URPN.	(US-PGPUB; USPAT; USOCR)	OR	ON	ON	2013/09/12 09:55 AM
L299	23	Sunpower.as. and oxide.clm.	(US-PGPUB; USPAT; USOCR; FPRS; EPO; JPO; DERWENT; IBM_TDB)	OR	ON	ON	2013/09/12 10:35 AM
L300	5	"12070742"	(US-PGPUB; USPAT; USOCR)	OR	OFF	OFF	2016/06/08 09:05 AM
L301	5181	tunneling near2 oxide	(US-PGPUB; USPAT; USOCR)	OR	OFF	OFF	2016/06/08 09:19 AM
L302	205	tunnel$4 near2 oxide and (solar photovoltaic) and (rear$4 back$4) near2 (electrode contact) and (passivat$4 anti?reflect$4 ARC)	(US-PGPUB; USPAT; USOCR)	OR	OFF	OFF	2016/06/08 09:20 AM
L303	210	tunnel$4 near2 oxide and (solar photovoltaic) and (rear$4 back$4) near2 (electrode contact) and (passivat$4 anti?reflect$4 ARC)	(US-PGPUB; USPAT; USOCR; FPRS; EPO; JPO; DERWENT; IBM_TDB)	OR	OFF	OFF	2016/06/08 09:29 AM
L304	5	L303 not L302	(US-PGPUB; USPAT; USOCR; FPRS; EPO; JPO; DERWENT; IBM_TDB)	OR	OFF	OFF	2016/06/08 09:29 AM
L305	238	(heterojunction) and (solar photovoltaic) and (rear$4 back$4) near2 (electrode contact) and (passivat$4 anti?reflect$4 ARC) and (polysilicon polycrystalline) same (wafer monocrystalline)	(US-PGPUB; USPAT; USOCR; FPRS; EPO; JPO; DERWENT; IBM_TDB)	OR	OFF	OFF	2016/06/08 09:31 AM
L306	99	"7468485"	(US-PGPUB; USPAT; USOCR; FPRS; EPO; JPO; DERWENT; IBM_TDB)	OR	OFF	OFF	2016/06/08 09:46 AM

L307	66	"6262359"	(US-PGPUB; USPAT; USOCR; FPRS; EPO; JPO; DERWENT; IBM_TDB)	OR	OFF	OFF	2016/06/08 09:49 AM
L308	421	(heterojunction) and (solar photovoltaic) and (passivat$4 anti?reflect$4 ARC) and (polysilicon polycrystalline) same (wafer monocrystalline)	(US-PGPUB; USPAT; USOCR; FPRS; EPO; JPO; DERWENT; IBM_TDB)	OR	OFF	OFF	2016/06/08 10:20 AM
L309	183	L308 not L305	(US-PGPUB; USPAT; USOCR; FPRS; EPO; JPO; DERWENT; IBM_TDB)	OR	OFF	OFF	2016/06/08 10:21 AM
L310	49	"5030295"	(US-PGPUB; USPAT; USOCR; FPRS; EPO; JPO; DERWENT; IBM_TDB)	OR	OFF	OFF	2016/06/08 10:23 AM
L311	129	("4602120" | "4675468" | "4703553" | "4726850" | "4781766" | "4824489" | "5030295" | "5053083" | "5346850").PN. OR ("5538564").URPN.	(US-PGPUB; USPAT; USOCR)	OR	ON	ON	2016/06/08 10:25 AM
L312	248	tunnel$4 near2 oxide and (solar photovoltaic) and (rear$4 back$4) near2 (electrode contact)	(US-PGPUB; USPAT; USOCR; FPRS; EPO; JPO; DERWENT; IBM_TDB)	OR	OFF	OFF	2016/06/08 10:43 AM
L313	199	tunnel$4 near2 oxide and (solar photovoltaic) and (polysilicon polycrystalline) same (wafer monocrystalline)	(US-PGPUB; USPAT; USOCR; FPRS; EPO; JPO; DERWENT; IBM_TDB)	OR	OFF	OFF	2016/06/08 10:44 AM
L314	105	L313 not L302	(US-PGPUB; USPAT; USOCR; FPRS; EPO; JPO; DERWENT; IBM_TDB)	OR	OFF	OFF	2016/06/08 10:44 AM
L315	516	(solar photovoltaic) and (polysilicon polycrystalline) with emitter	(US-PGPUB; USPAT; USOCR; FPRS; EPO; JPO; DERWENT; IBM_TDB)	OR	OFF	OFF	2016/06/08 10:48 AM
L316	115	(solar photovoltaic) and (polysilicon polycrystalline) with emitter and heterojunction	(US-PGPUB; USPAT; USOCR; FPRS; EPO; JPO; DERWENT; IBM_TDB)	OR	OFF	OFF	2016/06/08 10:49 AM
L317	635	(solar photovoltaic) and (polysilicon polycrystalline multicrystalline silicon) with emitter and heterojunction	(US-PGPUB; USPAT; USOCR; FPRS; EPO; JPO; DERWENT; IBM_TDB)	OR	OFF	OFF	2016/06/08 10:59 AM

L318	442	(solar photovoltaic) and (polysilicon polycrystalline multicrystalline silicon Si) with emitter and heterojunction and (polysilicon polycrystalline multicrystalline)	(US-PGPUB; USPAT; USOCR; FPRS; EPO; JPO; DERWENT; IBM_TDB)	OR	OFF	OFF	2016/06/08 10:59 AM
L319	327	L318 not L316	(US-PGPUB; USPAT; USOCR; FPRS; EPO; JPO; DERWENT; IBM_TDB)	OR	OFF	OFF	2016/06/08 11:00 AM
L320	51	("4403392" | "4502206").PN. OR ("5057439").URPN.	(US-PGPUB; USPAT; USOCR)	OR	ON	ON	2016/06/08 11:09 AM
L321	8	("20030089393" | "20060255340" | "20060263642" | "4703553" | "5011565" | "5057439" | "6403877" | "7858430").PN. OR ("8207443").URPN.	(US-PGPUB; USPAT; USOCR)	OR	ON	ON	2016/06/08 11:12 AM
L322	34	"5030295"	(US-PGPUB; USPAT; USOCR)	OR	ON	ON	2016/06/08 11:16 AM
L323	1803	tunnel$4 and (solar photovoltaic) and heterojunction	(US-PGPUB; USPAT; USOCR; FPRS; EPO; JPO; DERWENT; IBM_TDB)	OR	OFF	OFF	2016/06/08 11:20 AM
L324	380	tunnel$4 and (solar photovoltaic) and heterojunction and emitter and heterojunction and (polysilicon polycrystalline multicrystalline)	(US-PGPUB; USPAT; USOCR; FPRS; EPO; JPO; DERWENT; IBM_TDB)	OR	OFF	OFF	2016/06/08 11:20 AM
L325	275	L324 not L319	(US-PGPUB; USPAT; USOCR; FPRS; EPO; JPO; DERWENT; IBM_TDB)	OR	OFF	OFF	2016/06/08 11:20 AM
L326	3	"20060263642"	(US-PGPUB; USPAT; USOCR; FPRS; EPO; JPO; DERWENT; IBM_TDB)	OR	ON	ON	2016/06/08 11:22 AM
L327	807	tunnel$4 and (solar photovoltaic) and heterojunction and emitter	(US-PGPUB; USPAT; USOCR; FPRS; EPO; JPO; DERWENT; IBM_TDB)	OR	OFF	OFF	2016/06/08 11:23 AM
L328	427	L327 not L324	(US-PGPUB; USPAT; USOCR; FPRS; EPO; JPO; DERWENT; IBM_TDB)	OR	OFF	OFF	2016/06/08 11:23 AM
L329	35	"5563092"	(US-PGPUB; USPAT;	OR	ON	ON	2016/06/08

			USOCR; FPRS; EPO; JPO; DERWENT; IBM_TDB)				12:23 PM
L330	516761	polycrystalline and (thin tunnel$3) oxide and crystalline	(US-PGPUB; USPAT; USOCR; FPRS; EPO; JPO; DERWENT; IBM_TDB)	OR	ON	ON	2016/06/08 12:25 PM
L331	11587	polycrystalline and (thin tunnel$3) near2 oxide and crystalline	(US-PGPUB; USPAT; USOCR; FPRS; EPO; JPO; DERWENT; IBM_TDB)	OR	ON	ON	2016/06/08 12:25 PM
L332	1066	polycrystalline same (thin tunnel$3) near2 oxide same (monocrystalline wafer crystalline)	(US-PGPUB; USPAT; USOCR; FPRS; EPO; JPO; DERWENT; IBM_TDB)	OR	ON	ON	2016/06/08 12:25 PM
L333	147	polycrystalline same (thin tunnel$3) near2 oxide same (monocrystalline wafer crystalline) and (solar photovoltaic)	(US-PGPUB; USPAT; USOCR; FPRS; EPO; JPO; DERWENT; IBM_TDB)	OR	ON	ON	2016/06/08 12:25 PM
L334	282	(polysilicon polycrystalline) same (thin tunnel$3) near2 oxide same (monocrystalline wafer crystalline) and (solar photovoltaic)	(US-PGPUB; USPAT; USOCR; FPRS; EPO; JPO; DERWENT; IBM_TDB)	OR	ON	ON	2016/06/08 12:30 PM
L335	27	(emitter) with (thin tunnel$3) near2 oxide same (monocrystalline wafer crystalline) and (solar photovoltaic)	(US-PGPUB; USPAT; USOCR; FPRS; EPO; JPO; DERWENT; IBM_TDB)	OR	ON	ON	2016/06/08 12:39 PM
L336	28	(emitter) with (thin tunnel$3 interfacial) near2 oxide same (monocrystalline wafer crystalline) and (solar photovoltaic)	(US-PGPUB; USPAT; USOCR; FPRS; EPO; JPO; DERWENT; IBM_TDB)	OR	ON	ON	2016/06/08 12:40 PM
L337	1098	(thin tunnel$3) near2 oxide and heterojunction and (solar photovoltaic)	(US-PGPUB; USPAT; USOCR; FPRS; EPO; JPO; DERWENT; IBM_TDB)	OR	ON	ON	2016/06/08 12:42 PM
L339	432	(thin tunnel$3) near2 oxide and heterojunction and (solar photovoltaic).ab.	(US-PGPUB; USPAT; USOCR; FPRS; EPO; JPO; DERWENT; IBM_TDB)	OR	ON	ON	2016/06/08 12:43 PM
L340	405	L339 not L328	(US-PGPUB; USPAT; USOCR; FPRS; EPO; JPO; DERWENT; IBM_TDB)	OR	ON	ON	2016/06/08 12:43 PM
L341	176	(interfacial interface tunnel$3) near2 oxide	(US-PGPUB; USPAT; USOCR; FPRS; EPO;	OR	ON	ON	2016/06/08 12:46 PM

		and heterojunction and (solar photovoltaic).ab.	JPO; DERWENT; IBM_TDB)				
L342	3	"20070256728"	(US-PGPUB; USPAT; USOCR; FPRS; EPO; JPO; DERWENT; IBM_TDB)	OR	ON	ON	2016/06/08 12:49 PM
L343	16	emitter with interfacial near oxide and (solar photovoltaic)	(US-PGPUB; USPAT; USOCR; FPRS; EPO; JPO; DERWENT; IBM_TDB)	OR	ON	ON	2016/06/08 01:02 PM
L344	24	("3919639" | "4296372" | "4431460" | "4464627" | "4467519" | "4483726" | "4598249" | "4609867" | "4695794" | "4709141" | "4859939" | "4956603").PN. OR ("5138256").URPN.	(US-PGPUB; USPAT; USOCR)	OR	ON	ON	2016/06/08 01:05 PM
L345	353	(interfacial interface tunnel$3) near2 oxide same (polysilicon polycrystalline) and (solar photovoltaic)	(US-PGPUB; USPAT; USOCR; FPRS; EPO; JPO; DERWENT; IBM_TDB)	OR	ON	ON	2016/06/08 01:06 PM
L346	356	(interfacial interface tunnel$3) near2 oxide same (polysilicon polycrystalline multicrystalline) and (solar photovoltaic)	(US-PGPUB; USPAT; USOCR; FPRS; EPO; JPO; DERWENT; IBM_TDB)	OR	ON	ON	2016/06/08 01:09 PM
L347	449	(interfacial interface tunnel$3 silicon) near2 oxide with (interfac$3 tunnel$) same (polysilicon polycrystalline) and (solar photovoltaic)	(US-PGPUB; USPAT; USOCR; FPRS; EPO; JPO; DERWENT; IBM_TDB)	OR	ON	ON	2016/06/08 01:14 PM
L348	62	tunneling near oxide and (solar photovoltaic).ab.	(US-PGPUB; USPAT; USOCR; FPRS; EPO; JPO; DERWENT; IBM_TDB)	OR	ON	ON	2016/06/08 01:23 PM
L349	2632	(inversion tunneling near oxide) and (solar photovoltaic).ab.	(US-PGPUB; USPAT; USOCR; FPRS; EPO; JPO; DERWENT; IBM_TDB)	OR	ON	ON	2016/06/08 01:25 PM
L350	123	(inversion with oxide tunneling near oxide) and (solar photovoltaic).ab.	(US-PGPUB; USPAT; USOCR; FPRS; EPO; JPO; DERWENT; IBM_TDB)	OR	ON	ON	2016/06/08 01:25 PM
L351	276	(inversion with oxide tunnel$3 near oxide) and (solar photovoltaic).ab.	(US-PGPUB; USPAT; USOCR; FPRS; EPO; JPO; DERWENT; IBM_TDB)	OR	ON	ON	2016/06/08 01:26 PM
L352	222	(tunnel$3 near oxide) and (solar	(US-PGPUB; USPAT; USOCR; FPRS; EPO;	OR	ON	ON	2016/06/08 01:27 PM

		photovoltaic).ab.	JPO; DERWENT; IBM_TDB)				
L353	153	L352 not L350	(US-PGPUB; USPAT; USOCR; FPRS; EPO; JPO; DERWENT; IBM_TDB)	OR	ON	ON	2016/06/08 01:27 PM
L354	35	"5563092"	(US-PGPUB; USPAT; USOCR; FPRS; EPO; JPO; DERWENT; IBM_TDB)	OR	ON	ON	2016/06/08 01:37 PM
L355	84638	polysilicon with interfac$4 oxide with growth	(US-PGPUB; USPAT; USOCR; FPRS; EPO; JPO; DERWENT; IBM_TDB)	OR	ON	ON	2016/06/08 01:38 PM
L356	17344	polysilicon with interfac$4 oxide with growth with (crystalline single near crystal wafer)	(US-PGPUB; USPAT; USOCR; FPRS; EPO; JPO; DERWENT; IBM_TDB)	OR	ON	ON	2016/06/08 01:38 PM
L357	0	polysilicon with interfac$4 near3 oxide with growth with (crystalline single near crystal wafer)	(US-PGPUB; USPAT; USOCR; FPRS; EPO; JPO; DERWENT; IBM_TDB)	OR	ON	ON	2016/06/08 01:38 PM
L358	62	polysilicon with interfac$4 near3 oxide with (crystalline single near crystal wafer)	(US-PGPUB; USPAT; USOCR; FPRS; EPO; JPO; DERWENT; IBM_TDB)	OR	ON	ON	2016/06/08 01:38 PM
L359	142	"5011565"	(US-PGPUB; USPAT; USOCR; FPRS; EPO; JPO; DERWENT; IBM_TDB)	OR	ON	ON	2016/06/08 03:47 PM
L360	72	"5057439"	(US-PGPUB; USPAT; USOCR; FPRS; EPO; JPO; DERWENT; IBM_TDB)	OR	ON	ON	2016/06/08 03:51 PM
L361	6	"7858430"	(US-PGPUB; USPAT; USOCR; FPRS; EPO; JPO; DERWENT; IBM_TDB)	OR	ON	ON	2016/06/08 03:54 PM
L362	17	(anti?reflect$4) with (stack) with ITO and (solar photovoltaic)	(US-PGPUB; USPAT; USOCR; FPRS; EPO; JPO; DERWENT; IBM_TDB)	OR	ON	ON	2016/06/08 04:15 PM
L363	4439	(aluminum Al) with (silver Ag) with electrode and (solar photovoltaic).ab.	(US-PGPUB; USPAT; USOCR; FPRS; EPO; JPO; DERWENT; IBM_TDB)	OR	ON	ON	2016/06/08 05:20 PM
L364	660	(aluminum Al) with (silver Ag) with electrode and (solar photovoltaic).ab. and BSF	(US-PGPUB; USPAT; USOCR; FPRS; EPO; JPO; DERWENT; IBM_TDB)	OR	ON	ON	2016/06/08 05:21 PM
L365	51	("4403392" |	(US-PGPUB; USPAT;	OR	ON	ON	2016/06/08

		"4502206").PN. OR ("5057439").URPN.	USOCR)				05:40 PM
L366	212	(polycrystalline polysilicon) near2 emitter and (solar photovoltaic)	(US-PGPUB; USPAT; USOCR; FPRS; EPO; JPO; DERWENT; IBM_TDB)	OR	ON	ON	2016/06/08 05:51 PM
L367	689	(polycrystalline polysilicon) and BSF and (single near crystal$4 monocrystalline) near5 substrate and (solar photovoltaic)	(US-PGPUB; USPAT; USOCR; FPRS; EPO; JPO; DERWENT; IBM_TDB)	OR	ON	ON	2016/06/08 05:52 PM
L368	699	(polycrystalline polysilicon) and (FSF BSF) and (single near crystal$4 monocrystalline) near5 substrate and (solar photovoltaic)	(US-PGPUB; USPAT; USOCR; FPRS; EPO; JPO; DERWENT; IBM_TDB)	OR	ON	ON	2016/06/08 05:53 PM
L369	507	(polycrystalline polysilicon) and (FSF BSF) and (single near crystal$4 monocrystalline) near5 substrate and (solar photovoltaic).ab.	(US-PGPUB; USPAT; USOCR; FPRS; EPO; JPO; DERWENT; IBM_TDB)	OR	ON	ON	2016/06/08 05:53 PM
L370	63	(polycrystalline polysilicon) and (FSF) and (single near crystal$4 monocrystalline) near5 substrate and (solar photovoltaic).ab.	(US-PGPUB; USPAT; USOCR; FPRS; EPO; JPO; DERWENT; IBM_TDB)	OR	ON	ON	2016/06/08 05:54 PM
L371	93	(FSF) and (single near crystal$4 monocrystalline) near5 substrate and (solar photovoltaic).ab.	(US-PGPUB; USPAT; USOCR; FPRS; EPO; JPO; DERWENT; IBM_TDB)	OR	ON	ON	2016/06/08 05:55 PM
L372	30	L371 not L370	(US-PGPUB; USPAT; USOCR; FPRS; EPO; JPO; DERWENT; IBM_TDB)	OR	ON	ON	2016/06/08 05:56 PM
L373	186	(FSF front near2 surface near field) and (single near crystal$4 monocrystalline) near5 substrate and (solar photovoltaic).ab.	(US-PGPUB; USPAT; USOCR; FPRS; EPO; JPO; DERWENT; IBM_TDB)	OR	ON	ON	2016/06/08 05:57 PM
L374	265	(FSF front near2 surface near field) and (single near crystal$4 monocrystalline wafer) near5 substrate and (solar photovoltaic).ab.	(US-PGPUB; USPAT; USOCR; FPRS; EPO; JPO; DERWENT; IBM_TDB)	OR	ON	ON	2016/06/08 05:58 PM

L375	172	L374 not L371	(US-PGPUB; USPAT; USOCR; FPRS; EPO; JPO; DERWENT; IBM_TDB)	OR	ON	ON	2016/06/08 05:58 PM
L376	71	Veschetti.in.	(US-PGPUB; USPAT; USOCR; FPRS; EPO; JPO; DERWENT; IBM_TDB)	OR	ON	ON	2016/06/08 06:02 PM
L377	53	Veschetti.in. and photovoltaic	(US-PGPUB; USPAT; USOCR; FPRS; EPO; JPO; DERWENT; IBM_TDB)	OR	ON	ON	2016/06/08 06:02 PM
L378	1	2008-D39688.NRAN.	(DERWENT)	OR	ON	ON	2016/06/08 06:03 PM
L379	7	"2003083955"	(US-PGPUB; USPAT; USOCR; FPRS; EPO; JPO; DERWENT; IBM_TDB)	OR	ON	ON	2016/06/08 06:04 PM
L380	19	"5134090"	(US-PGPUB; USPAT; USOCR; FPRS; EPO; JPO; DERWENT; IBM_TDB)	OR	ON	ON	2016/06/08 06:06 PM
L381	2	("20030183270"|"5057439").PN.	(US-PGPUB; USPAT)	OR	ON	ON	2016/06/08 06:21 PM
L382	2	"20030183270"	(US-PGPUB; USPAT)	OR	ON	ON	2016/06/08 06:25 PM
L383	2	("8222516"|"8878053").PN.	(US-PGPUB; USPAT)	OR	ON	ON	2016/06/08 06:29 PM
L384	32	(H01L31/0236 H01L31/0745 H01L31/1804 H01L31/022425 H01L31/068 H01L31/182 H01L31/056).cpc. and (Y02E10/52 Y02P70/521 Y02E10/547).cpc. and (polysilicon polycrystalline) near emitter and tunnel$3 near oxide	(US-PGPUB; USPAT; USOCR; FPRS; EPO; JPO; DERWENT; IBM_TDB)	OR	ON	ON	2016/06/08 06:44 PM
L385	1	"14504771"	(US-PGPUB; USPAT; USOCR; FPRS; EPO; JPO; DERWENT; IBM_TDB)	OR	ON	ON	2016/10/05 10:07 AM
L386	76	(US-20050268963-$ or US-20020153039-$ or US-20060196535-$ or US-20090101199-$ or US-20040097062-$ or US-20040112426-$ or US-20070186970-$ or US-20050272175-$ or	(US-PGPUB; USPAT; FPRS; EPO; DERWENT)	OR	ON	ON	2016/10/05 10:10 AM

		US-20040063326-$ or US-20100224238-$ or US-20100000597-$ or US-20070256728-$ or US-20060060238-$ or US-20080092944-$ or US-20110162706-$ or US-20070151598-$ or US-20080092951-$ or US-20110104618-$ or US-20080223446-$ or US-20070151599-$ or US-20090205712-$ or US-20100186803-$ or US-20090142880-$ or US-20060255340-$ or US-20050017257-$ or US-20100186802-$).did. or (US-20020142500-$ or US-20040003836-$ or US-20100087031-$).did. or (US-4379944-$ or US-4665277-$ or US-5320684-$ or US-6210991-$ or US-5792280-$ or US-5899704-$ or US-6262359-$ or US-5258077-$ or US-6071753-$ or US-7468485-$ or US-7838400-$ or US-5641362-$ or US-8222516-$ or US-3961997-$ or US-5057439-$ or US-8207443-$ or US-5138256-$ or US-7633006-$ or US-6130380-$ or US-5738731-$ or US-4927770-$ or US-6624049-$ or US-4152824-$ or US-6214743-$ or US-7029943-$ or US-6998288-$).did. or (US-8878053-$ or US-8207444-$ or US-5538564-$ or US-7566974-$ or US-5030295-$ or US-6407012-$ or US-5563092-$ or US-7858430-$ or US-7554031-$).did. or (WO-2009094578-$ or					

		WO-2009094578-$).did. or (WO-2009094578-$).did. or (US-20090205712-$ or US-20080121279-$ or WO-2007130188-$ or US-7468485-$ or JP-07106611-$ or US-20040200520-$ or JP-2004247364-$ or US-5030295-$ or WO-03083955-$).did.					
L387	19	L386 and emitter with (back$4 rear$4)	(US-PGPUB; USPAT; USOCR; FPRS; EPO; JPO; DERWENT; IBM_TDB)	OR	ON	ON	2016/10/05 10:10 AM
L388	5	"20060048809"	(US-PGPUB; USPAT; USOCR; FPRS; EPO; JPO; DERWENT; IBM_TDB)	OR	ON	ON	2016/10/06 09:33 AM
L389	10	"2007106611"	(US-PGPUB; USPAT; USOCR; FPRS; EPO; JPO; DERWENT; IBM_TDB)	OR	ON	ON	2017/01/10 03:14 PM
L390	5	"07106611"	(US-PGPUB; USPAT; USOCR; FPRS; EPO; JPO; DERWENT; IBM_TDB)	OR	ON	ON	2017/01/10 03:16 PM
L391	5	"07106611"	(US-PGPUB; USPAT; USOCR; FPRS; EPO; JPO; DERWENT; IBM_TDB)	OR	ON	ON	2017/01/18 11:38 AM
L392	2	"12421570"	(US-PGPUB; USPAT; USOCR; FPRS; EPO; JPO; DERWENT; IBM_TDB)	OR	ON	ON	2017/01/31 10:50 AM
L393	116	"7468485"	(US-PGPUB; USPAT; USOCR; FPRS; EPO; JPO; DERWENT; IBM_TDB)	OR	ON	ON	2017/01/31 10:53 AM
L394	70	"6262359"	(US-PGPUB; USPAT; USOCR; FPRS; EPO; JPO; DERWENT; IBM_TDB)	OR	ON	ON	2017/04/14 09:47 AM
L395	23	"2009094578"	(US-PGPUB; USPAT; USOCR; FPRS; EPO; JPO; DERWENT; IBM_TDB)	OR	ON	ON	2017/04/14 10:09 AM
L396	1	"14504771"	(US-PGPUB; USPAT; USOCR; FPRS; EPO; JPO; DERWENT; IBM_TDB)	OR	ON	ON	2017/04/17 11:21 AM
L397	23	"2009094578"	(US-PGPUB; USPAT; USOCR; FPRS; EPO;	OR	ON	ON	2017/04/17 11:40 AM

			JPO; DERWENT; IBM_TDB)				
L398	23	"2009094578"	(US-PGPUB; USPAT; USOCR; FPRS; EPO; JPO; DERWENT; IBM_TDB)	OR	ON	ON	2017/04/17 03:34 PM
L399	18	"2009031886"	(US-PGPUB; USPAT; USOCR; FPRS; EPO; JPO; DERWENT; IBM_TDB)	OR	ON	ON	2017/04/17 03:34 PM
L400	1	"14504771"	(US-PGPUB; USPAT; USOCR; FPRS; EPO; JPO; DERWENT; IBM_TDB)	OR	ON	ON	2017/06/26 09:27 AM
L401	73	"6262359"	(US-PGPUB; USPAT; USOCR; FPRS; EPO; JPO; DERWENT; IBM_TDB)	OR	ON	ON	2017/06/26 09:30 AM
L402	76	(US-20050268963-$ or US-20020153039-$ or US-20060196535-$ or US-20090101199-$ or US-20040097062-$ or US-20040112426-$ or US-20070186970-$ or US-20050272175-$ or US-20040063326-$ or US-20100224238-$ or US-20100000597-$ or US-20070256728-$ or US-20060060238-$ or US-20080092944-$ or US-20110162706-$ or US-20070151598-$ or US-20080092951-$ or US-20110104618-$ or US-20080223446-$ or US-20070151599-$ or US-20090205712-$ or US-20100186803-$ or US-20090142880-$ or US-20060255340-$ or US-20050017257-$ or US-20100186802-$).did. or (US-20020142500-$ or US-20040003836-$ or US-20100087031-$).did. or (US-4379944-$ or US-4665277-$ or US-5320684-$ or US-6210991-$ or US-5792280-$ or US-5899704-$ or US-6262359-$ or US-5258077-$ or US-	(US-PGPUB; USPAT; FPRS; EPO; DERWENT)	OR	ON	ON	2017/06/26 09:33 AM

		6071753-$ or US-7468485-$ or US-7838400-$ or US-5641362-$ or US-8222516-$ or US-3961997-$ or US-5057439-$ or US-8207443-$ or US-5138256-$ or US-7633006-$ or US-6130380-$ or US-5738731-$ or US-4927770-$ or US-6624049-$ or US-4152824-$ or US-6214743-$ or US-7029943-$ or US-6998288-$).did. or (US-8878053-$ or US-8207444-$ or US-5538564-$ or US-7566974-$ or US-5030295-$ or US-6407012-$ or US-5563092-$ or US-7858430-$ or US-7554031-$).did. or (WO-2009094578-$ or WO-2009094578-$).did. or (WO-2009094578-$).did. or (US-20090205712-$ or US-20080121279-$ or WO-2007130188-$ or US-7468485-$ or JP-07106611-$ or US-20040200520-$ or JP-2004247364-$ or US-5030295-$ or WO-03083955-$).did.					
L403	25	L402 and (contact near2 (resistance resistivi$3))	(US-PGPUB; USPAT; USOCR; FPRS; EPO; JPO; DERWENT; IBM_TDB)	OR	ON	ON	2017/06/26 09:34 AM
L404	787	(solar photovoltaic).ab. and (contact near2 (resistance resistivi$3)) near7 (dop$3 diffus$4)	(US-PGPUB; USPAT; USOCR; FPRS; EPO; JPO; DERWENT; IBM_TDB)	OR	ON	ON	2017/06/26 09:39 AM
L405	678	(solar photovoltaic).ab. and (contact near2 (resistance resistivi$3)) near7 (dop$3 diffus$4) and (crystal$4 wafer)	(US-PGPUB; USPAT; USOCR; FPRS; EPO; JPO; DERWENT; IBM_TDB)	OR	ON	ON	2017/06/26 09:43 AM
L406	230	(solar photovoltaic).ab. and (contact near2 (resistance resistivi$3)) near7 (dop$3 diffus$4)	(US-PGPUB; USPAT; USOCR; FPRS; EPO; JPO; DERWENT; IBM_TDB)	OR	ON	ON	2017/06/26 09:46 AM

		and (crystal$4 wafer) and ohms					
L408	1	L400 and omega	(US-PGPUB; USPAT; USOCR; FPRS; EPO; JPO; DERWENT; IBM_TDB)	OR	ON	ON	2017/06/26 09:51 AM
L409	196	(solar photovoltaic).ab. and (contact near2 (resistance resistivi$3)) near7 (dop$3 diffus$4) and (crystal$4 wafer) and omega	(US-PGPUB; USPAT; USOCR; FPRS; EPO; JPO; DERWENT; IBM_TDB)	OR	ON	ON	2017/06/26 09:51 AM
L410	14	("3620829" | "4078945" | "4227942" | "4640001" | "4675466").PN. OR ("5759292").URPN.	(US-PGPUB; USPAT; USOCR)	OR	ON	ON	2017/06/26 10:16 AM
L411	66	(solar photovoltaic).ab. and (contact near2 (resistance resistivi$3)) near7 (dop$3 diffus$4) same omega	(US-PGPUB; USPAT; USOCR; FPRS; EPO; JPO; DERWENT; IBM_TDB)	OR	ON	ON	2017/06/26 10:20 AM
L412	219	(solar photovoltaic).ab. and (contact near2 (resistance resistivi$3)) same omega	(US-PGPUB; USPAT; USOCR; FPRS; EPO; JPO; DERWENT; IBM_TDB)	OR	ON	ON	2017/06/26 10:22 AM
L413	153	L412 not L411	(US-PGPUB; USPAT; USOCR; FPRS; EPO; JPO; DERWENT; IBM_TDB)	OR	ON	ON	2017/06/26 10:22 AM
L414	9	"20090017606"	(US-PGPUB; USPAT; USOCR; FPRS; EPO; JPO; DERWENT; IBM_TDB)	OR	ON	ON	2017/06/26 10:26 AM
L415	1	2007-797066.NRAN.	(DERWENT)	OR	ON	ON	2017/06/26 10:26 AM
L416	1	2007-797066.NRAN.	(DERWENT)	OR	ON	ON	2017/06/26 10:28 AM
L417	120	"4152824"	(US-PGPUB; USPAT; USOCR; FPRS; EPO; JPO; DERWENT; IBM_TDB)	OR	ON	ON	2017/06/26 10:29 AM
L418	209	(solar photovoltaic).ab. and (contact near2 (resistance resistivi$3)) near7 (dop$3 diffus$4) and omega	(US-PGPUB; USPAT; USOCR; FPRS; EPO; JPO; DERWENT; IBM_TDB)	OR	ON	ON	2017/06/26 11:07 AM
L419	107	L418 not L412	(US-PGPUB; USPAT; USOCR; FPRS; EPO; JPO; DERWENT; IBM_TDB)	OR	ON	ON	2017/06/26 11:07 AM
L420	131	(solar photovoltaic).ab. and (contact near2 (resistance resistivi$3)) near7 (dop$3 diffus$4)	(US-PGPUB; USPAT; USOCR; FPRS; EPO; JPO; DERWENT; IBM_TDB)	OR	ON	ON	2017/06/26 11:18 AM

		and (back rear) near2 (junction)					
L421	3	"20100197126"	(US-PGPUB; USPAT; USOCR; FPRS; EPO; JPO; DERWENT; IBM_TDB)	OR	ON	ON	2017/06/26 11:23 AM
L422	210	"6429037"	(US-PGPUB; USPAT; USOCR; FPRS; EPO; JPO; DERWENT; IBM_TDB)	OR	ON	ON	2017/06/26 11:25 AM
L423	82	(US-20050268963-$ or US-20020153039-$ or US-20060196535-$ or US-20090101199-$ or US-20040097062-$ or US-20040112426-$ or US-20070186970-$ or US-20050272175-$ or US-20040063326-$ or US-20100224238-$ or US-20100000597-$ or US-20070256728-$ or US-20060060238-$ or US-20080092944-$ or US-20110162706-$ or US-20070151598-$ or US-20080092951-$ or US-20110104618-$ or US-20080223446-$ or US-20070151599-$ or US-20090205712-$ or US-20100186803-$ or US-20090142880-$ or US-20060255340-$ or US-20050017257-$ or US-20100186802-$).did. or (US-20020142500-$ or US-20040003836-$ or US-20100087031-$ or US-20090017606-$ or US-20090183768-$ or US-20110139231-$).did. or (US-4379944-$ or US-4665277-$ or US-5320684-$ or US-6210991-$ or US-5792280-$ or US-5899704-$ or US-6262359-$ or US-5258077-$ or US-6071753-$ or US-7468485-$ or US-7838400-$ or US-5641362-$ or US-8222516-$ or US-3961997-$ or US-	(US-PGPUB; USPAT; FPRS; EPO; DERWENT)	OR	ON	ON	2017/06/26 12:56 PM

		5057439-$ or US-8207443-$ or US-5138256-$ or US-7633006-$ or US-6130380-$ or US-5738731-$ or US-4927770-$ or US-6624049-$ or US-4152824-$ or US-6214743-$ or US-7029943-$ or US-6998288-$).did. or (US-8878053-$ or US-8207444-$ or US-5538564-$ or US-7566974-$ or US-5030295-$ or US-6407012-$ or US-5563092-$ or US-7858430-$ or US-7554031-$ or US-5759292-$ or US-6429037-$).did. or (WO-2009094578-$ or WO-2009094578-$).did. or (WO-2009094578-$).did. or (US-20090205712-$ or US-20080121279-$ or WO-2007130188-$ or US-7468485-$ or JP-07106611-$ or US-20040200520-$ or JP-2004247364-$ or US-5030295-$ or WO-03083955-$ or WO-2007082760-$).did.					
L424	34	L423 and polysilicon	(US-PGPUB; USPAT; FPRS; EPO; DERWENT)	OR	ON	ON	2017/06/26 12:56 PM
L425	105792	(silicon near nitride "Si.sub.3N.sub.4") with dielectric	(US-PGPUB; USPAT; FPRS; EPO; DERWENT)	OR	ON	ON	2017/06/26 01:59 PM
L426	1931	(silicon near nitride "Si.sub.3N.sub.4") with dielectric and (solar photovoltaic).ab.	(US-PGPUB; USPAT; FPRS; EPO; DERWENT)	OR	ON	ON	2017/06/26 01:59 PM
L427	1235	(silicon near nitride "Si.sub.3N.sub.4") near5 dielectric and (solar photovoltaic).ab.	(US-PGPUB; USPAT; FPRS; EPO; DERWENT)	OR	ON	ON	2017/06/26 01:59 PM
L428	785	(silicon near nitride "Si.sub.3N.sub.4") near5 dielectric and (solar photovoltaic).ab. and H01L31$.cpc.	(US-PGPUB; USPAT; FPRS; EPO; DERWENT)	OR	ON	ON	2017/06/26 02:00 PM

L429	373	(silicon near nitride "Si.sub.3N.sub.4") near8 (titanium dioxide "TiO.sub.2") with dielectric and (solar photovoltaic).ab. and H01L31$.cpc.	(US-PGPUB; USPAT; FPRS; EPO; DERWENT)	OR	ON	ON	2017/06/26 02:00 PM
L430	91	(silicon near nitride "Si.sub.3N.sub.4") near8 (titanium near dioxide "TiO.sub.2") with dielectric and (solar photovoltaic).ab. and H01L31$.cpc.	(US-PGPUB; USPAT; FPRS; EPO; DERWENT)	OR	ON	ON	2017/06/26 02:01 PM
L431	82	(US-20050268963-$ or US-20020153039-$ or US-20060196535-$ or US-20090101199-$ or US-20040097062-$ or US-20040112426-$ or US-20070186970-$ or US-20050272175-$ or US-20040063326-$ or US-20100224238-$ or US-20100000597-$ or US-20070256728-$ or US-20060060238-$ or US-20080092944-$ or US-20110162706-$ or US-20070151598-$ or US-20080092951-$ or US-20110104618-$ or US-20080223446-$ or US-20070151599-$ or US-20090205712-$ or US-20100186803-$ or US-20090142880-$ or US-20060255340-$ or US-20050017257-$ or US-20100186802-$).did. or (US-20020142500-$ or US-20040003836-$ or US-20100087031-$ or US-20090017606-$ or US-20090183768-$ or US-20110139231-$).did. or (US-4379944-$ or US-4665277-$ or US-5320684-$ or US-6210991-$ or US-5792280-$ or US-5899704-$ or US-6262359-$ or US-5258077-$ or US-6071753-$ or US-7468485-$ or US-	(US-PGPUB; USPAT; FPRS; EPO; DERWENT)	OR	ON	ON	2017/06/26 02:59 PM

		7838400-$ or US-5641362-$ or US-8222516-$ or US-3961997-$ or US-5057439-$ or US-8207443-$ or US-5138256-$ or US-7633006-$ or US-6130380-$ or US-5738731-$ or US-4927770-$ or US-6624049-$ or US-4152824-$ or US-6214743-$ or US-7029943-$ or US-6998288-$).did. or (US-8878053-$ or US-8207444-$ or US-5538564-$ or US-7566974-$ or US-5030295-$ or US-6407012-$ or US-5563092-$ or US-7858430-$ or US-7554031-$ or US-5759292-$ or US-6429037-$).did. or (WO-2009094578-$ or WO-2009094578-$).did. or (WO-2009094578-$).did. or (US-20090205712-$ or US-20080121279-$ or WO-2007130188-$ or US-7468485-$ or JP-07106611-$ or US-20040200520-$ or JP-2004247364-$ or US-5030295-$ or WO-03083955-$ or WO-2007082760-$).did.					
L432	17	L431 and omega	(US-PGPUB; USPAT; FPRS; EPO; DERWENT)	OR	ON	ON	2017/06/26 02:59 PM
L433	1	2007-797066.NRAN.	(DERWENT)	OR	ON	ON	2017/06/26 03:03 PM
L434	1	2007-797066.NRAN.	(DERWENT)	OR	ON	ON	2017/06/26 03:09 PM
L435	21	"8222516"	(US-PGPUB; USPAT; FPRS; EPO; DERWENT)	OR	ON	ON	2017/06/26 03:27 PM
L436	27	"8207444"	(US-PGPUB; USPAT; FPRS; EPO; DERWENT)	OR	ON	ON	2017/06/26 03:28 PM
L437	667	grad$4 with index and (solar photovoltaic).ab.	(US-PGPUB; USPAT; FPRS; EPO;	OR	ON	ON	2017/06/26 04:39 PM

			DERWENT)				
L438	114	grad$4 with index same (oxide "TiO.sub.2" silica SiO) and (solar photovoltaic).ab.	(US-PGPUB; USPAT; FPRS; EPO; DERWENT)	OR	ON	ON	2017/06/26 04:39 PM
L439	1	"14504771"	(US-PGPUB; USPAT; USOCR; FPRS; EPO; JPO; DERWENT; IBM_TDB)	OR	ON	ON	2017/09/28 11:59 AM
L440	692	polysilicon with surface near2 field	(US-PGPUB; USPAT; USOCR; FPRS; EPO; JPO; DERWENT; IBM_TDB)	OR	ON	ON	2017/09/28 02:44 PM
L441	71	polysilicon with surface near2 field same (crystalline wafer monocrystalline crystal)	(US-PGPUB; USPAT; USOCR; FPRS; EPO; JPO; DERWENT; IBM_TDB)	OR	ON	ON	2017/09/28 02:45 PM
L442	73	(polysilicon) with (surface near2 field BSF FSF) same (crystalline wafer monocrystalline crystal)	(US-PGPUB; USPAT; USOCR; FPRS; EPO; JPO; DERWENT; IBM_TDB)	OR	ON	ON	2017/09/28 02:47 PM
L443	146	(polysilicon polycrystalline near2 silicon) with (surface near2 field BSF FSF) same (crystalline wafer monocrystalline crystal)	(US-PGPUB; USPAT; USOCR; FPRS; EPO; JPO; DERWENT; IBM_TDB)	OR	ON	ON	2017/09/28 02:48 PM
L444	73	L443 not L442	(US-PGPUB; USPAT; USOCR; FPRS; EPO; JPO; DERWENT; IBM_TDB)	OR	ON	ON	2017/09/28 02:49 PM
L445	1	"14504771"	(US-PGPUB; USPAT; USOCR; FPRS; EPO; JPO; DERWENT; IBM_TDB)	OR	ON	ON	2018/03/01 06:41 PM
L446	1	"14504771"	(US-PGPUB; USPAT; USOCR; FPRS; EPO; JPO; DERWENT; IBM_TDB)	OR	ON	ON	2018/03/05 04:07 PM
L447	83	(US-20050268963-$ or US-20020153039-$ or US-20060196535-$ or US-20090101199-$ or US-20040097062-$ or US-20040112426-$ or US-20070186970-$ or US-20050272175-$ or US-20040063326-$ or US-20100224238-$ or US-20100000597-$ or US-20070256728-$ or US-20060060238-$ or US-20080092944-$ or US-20110162706-$ or	(US-PGPUB; USPAT; FPRS; EPO; DERWENT)	OR	ON	ON	2018/03/28 01:53 PM

		US-20070151598-$ or US-20080092951-$ or US-20110104618-$ or US-20080223446-$ or US-20070151599-$ or US-20090205712-$ or US-20100186803-$ or US-20090142880-$ or US-20060255340-$ or US-20050017257-$ or US-20100186802-$).did. or (US-20020142500-$ or US-20040003836-$ or US-20100087031-$ or US-20090017606-$ or US-20090183768-$ or US-20110139231-$).did. or (US-4379944-$ or US-4665277-$ or US-5320684-$ or US-6210991-$ or US-5792280-$ or US-5899704-$ or US-6262359-$ or US-5258077-$ or US-6071753-$ or US-7468485-$ or US-7838400-$ or US-5641362-$ or US-8222516-$ or US-3961997-$ or US-5057439-$ or US-8207443-$ or US-5138256-$ or US-7633006-$ or US-6130380-$ or US-5738731-$ or US-4927770-$ or US-6624049-$ or US-4152824-$ or US-6214743-$ or US-7029943-$ or US-6998288-$).did. or (US-8878053-$ or US-8207444-$ or US-5538564-$ or US-7566974-$ or US-5030295-$ or US-6407012-$ or US-5563092-$ or US-7858430-$ or US-7554031-$ or US-5759292-$ or US-6429037-$ or US-6146483-$).did. or (WO-2009094578-$ or WO-2009094578-$).did.					

		or (WO-2009094578-$).did. or (US-20090205712-$ or US-20080121279-$ or WO-2007130188-$ or US-7468485-$ or JP-07106611-$ or US-20040200520-$ or JP-2004247364-$ or US-5030295-$ or WO-03083955-$ or WO-2007082760-$).did.					
L448	47	L447 and (Al aluminum) with (electrode contact)	(US-PGPUB; USPAT; USOCR; FPRS; EPO; JPO; DERWENT; IBM_TDB)	OR	ON	ON	2018/03/28 01:54 PM
L449	10	"20060157103"	(US-PGPUB; USPAT; USOCR; FPRS; EPO; JPO; DERWENT; IBM_TDB)	OR	ON	ON	2020/05/26 04:56 PM
L450	3	"20090205712"	(US-PGPUB; USPAT; USOCR; FPRS; EPO; JPO; DERWENT; IBM_TDB)	OR	ON	ON	2020/05/26 04:58 PM
L451	4	"20100037936"	(US-PGPUB; USPAT; USOCR; FPRS; EPO; JPO; DERWENT; IBM_TDB)	OR	ON	ON	2020/05/26 04:58 PM
L452	83	(US-20050268963-$ or US-20020153039-$ or US-20060196535-$ or US-20090101199-$ or US-20040097062-$ or US-20040112426-$ or US-20070186970-$ or US-20050272175-$ or US-20040063326-$ or US-20100224238-$ or US-20100000597-$ or US-20070256728-$ or US-20060060238-$ or US-20080092944-$ or US-20110162706-$ or US-20070151598-$ or US-20080092951-$ or US-20110104618-$ or US-20080223446-$ or US-20070151599-$ or US-20090205712-$ or US-20100186803-$ or US-20090142880-$ or US-20060255340-$ or US-20050017257-$ or US-20100186802-$).did. or (US-20020142500-$ or US-	(US-PGPUB; USPAT; FPRS; EPO; DERWENT)	OR	ON	ON	2020/05/26 04:59 PM

		20040003836-$ or US-20100087031-$ or US-20090017606-$ or US-20090183768-$ or US-20110139231-$).did. or (US-4379944-$ or US-4665277-$ or US-5320684-$ or US-6210991-$ or US-5792280-$ or US-5899704-$ or US-6262359-$ or US-5258077-$ or US-6071753-$ or US-7468485-$ or US-7838400-$ or US-5641362-$ or US-8222516-$ or US-3961997-$ or US-5057439-$ or US-8207443-$ or US-5138256-$ or US-7633006-$ or US-6130380-$ or US-5738731-$ or US-4927770-$ or US-6624049-$ or US-4152824-$ or US-6214743-$ or US-7029943-$ or US-6998288-$).did. or (US-8878053-$ or US-8207444-$ or US-5538564-$ or US-7566974-$ or US-5030295-$ or US-6407012-$ or US-5563092-$ or US-7858430-$ or US-7554031-$ or US-5759292-$ or US-6429037-$ or US-6146483-$).did. or (WO-2009094578-$ or WO-2009094578-$).did. or (WO-2009094578-$).did. or (US-20090205712-$ or US-20080121279-$ or WO-2007130188-$ or US-7468485-$ or JP-07106611-$ or US-20040200520-$ or JP-2004247364-$ or US-5030295-$ or WO-03083955-$ or WO-2007082760-$).did.					
L453	10	L452 and edge near2	(US-PGPUB; USPAT;	OR	ON	ON	2020/05/26

		isolation	USOCR; FPRS; EPO; JPO; DERWENT; IBM_TDB)				04:59 PM
L454	14	"12166266"	(US-PGPUB; USPAT; USOCR; FPRS; EPO; JPO; DERWENT; IBM_TDB)	OR	ON	ON	2020/05/26 05:01 PM
L455	0	"12166266" and trench.clm.	(US-PGPUB; USPAT; USOCR; FPRS; EPO; JPO; DERWENT; IBM_TDB)	OR	ON	ON	2020/05/26 05:03 PM
L456	48	trench same edge with electric$4 with isolation and (solar near2 (cell battery) photovoltaic)	(US-PGPUB; USPAT; USOCR; FPRS; EPO; JPO; DERWENT; IBM_TDB)	OR	ON	ON	2020/05/26 05:03 PM
L457	2257	(photovoltaic solar near2 (cell battery)) same (back rear) near contact and (busbar bus near bar)	(US-PGPUB; USPAT; USOCR; FPRS; EPO; JPO; DERWENT; IBM_TDB)	OR	ON	ON	2020/05/26 05:27 PM
L458	1925	(photovoltaic solar near2 (cell battery)) with (back rear) near contact and (busbar bus near bar)	(US-PGPUB; USPAT; USOCR; FPRS; EPO; JPO; DERWENT; IBM_TDB)	OR	ON	ON	2020/05/26 05:28 PM
L459	633	(photovoltaic solar near2 (cell battery)) with (back rear) near contact and (busbar bus near bar) same interconnect$4	(US-PGPUB; USPAT; USOCR; FPRS; EPO; JPO; DERWENT; IBM_TDB)	OR	ON	ON	2020/05/26 05:28 PM
L460	3398	(photovoltaic solar near2 (cell battery)) and (busbar bus near bar) with (rear back)	(US-PGPUB; USPAT; USOCR; FPRS; EPO; JPO; DERWENT; IBM_TDB)	OR	ON	ON	2020/05/26 05:32 PM
L461	2145	(photovoltaic solar near2 (cell battery)) and (busbar bus near bar) with (rear back)	(US-PGPUB; USPAT; USOCR)	OR	ON	ON	2020/05/26 05:32 PM
L462	1258	(photovoltaic solar near2 (cell battery)) and (busbar bus near bar) with (rear back) and (busbar bus near bar) with (front)	(US-PGPUB; USPAT; USOCR)	OR	ON	ON	2020/05/26 05:32 PM
L463	90	(photovoltaic solar near2 (cell battery)) and (busbar bus near bar) with (rear back) and (busbar bus near bar) with (front) and (front near surface near field FSF)	(US-PGPUB; USPAT; USOCR)	OR	ON	ON	2020/05/26 05:34 PM
L464	275	(photovoltaic solar	(US-PGPUB; USPAT;	OR	ON	ON	2020/05/26

		near2 (cell battery)) and (busbar bus near bar) and (front near surface near field FSF)	USOCR)				05:36 PM
L465	185	L464 not L463	(US-PGPUB; USPAT; USOCR)	OR	ON	ON	2020/05/26 05:37 PM
L466	1488	(photovoltaic solar near2 (cell battery)) and (busbar bus near bar) and (surface near field FSF)	(US-PGPUB; USPAT; USOCR)	OR	ON	ON	2020/05/26 05:39 PM
L467	314	(photovoltaic solar near2 (cell battery)) and (busbar bus near bar) and (back near junction)	(US-PGPUB; USPAT; USOCR)	OR	ON	ON	2020/05/26 05:39 PM
L468	220	L467 not L464	(US-PGPUB; USPAT; USOCR)	OR	ON	ON	2020/05/26 05:39 PM
L469	394	(photovoltaic solar near2 (cell battery)) and (busbar bus near bar) and ((back rear) near junction)	(US-PGPUB; USPAT; USOCR)	OR	ON	ON	2020/05/26 05:42 PM
L470	80	L469 not L467	(US-PGPUB; USPAT; USOCR)	OR	ON	ON	2020/05/26 05:42 PM
L471	73	"4665277"	(US-PGPUB; USPAT; USOCR; FPRS; EPO; JPO; DERWENT; IBM_TDB)	OR	ON	ON	2020/05/27 09:40 AM
L472	2	"20090301557"	(US-PGPUB; USPAT; USOCR; FPRS; EPO; JPO; DERWENT; IBM_TDB)	OR	ON	ON	2020/05/27 09:47 AM
L473	1	"14686801"	(US-PGPUB; USPAT; USOCR; FPRS; EPO; JPO; DERWENT; IBM_TDB)	OR	ON	ON	2020/05/27 09:49 AM
L474	14	("20100218821"|"20100275983"|"20130061924"|"20090301557"|"20100224251"|"20120040490").PN.	(US-PGPUB; USPAT; USOCR; FPRS; EPO; JPO; DERWENT; IBM_TDB)	OR	ON	ON	2020/05/27 09:52 AM
L475	3	"20040200520"	(US-PGPUB; USPAT; USOCR; FPRS; EPO; JPO; DERWENT; IBM_TDB)	OR	ON	ON	2020/05/27 10:00 AM
L476	3	"20050189015"	(US-PGPUB; USPAT; USOCR; FPRS; EPO; JPO; DERWENT; IBM_TDB)	OR	ON	ON	2020/05/27 10:02 AM
L477	2	"20050189013"	(US-PGPUB; USPAT; USOCR; FPRS; EPO; JPO; DERWENT; IBM_TDB)	OR	ON	ON	2020/05/27 10:02 AM

L478	9	"6461947"	(US-PGPUB; USPAT; USOCR; FPRS; EPO; JPO; DERWENT; IBM_TDB)	OR	ON	ON	2020/05/27 10:03 AM
L479	1119	point near contact with (rear back) and ("SiO.sub.2" silica passivat$4)	(US-PGPUB; USPAT; USOCR; FPRS; EPO; JPO; DERWENT; IBM_TDB)	OR	ON	ON	2020/05/27 10:05 AM
L480	191	point near contact with (rear back) and ("SiO.sub.2" silica passivat$4) same (reflect$4 mirror) and (photovoltaic solar near2 (Cell battery module panel) photoelectric photocell photo?cell).ab.	(US-PGPUB; USPAT; USOCR; FPRS; EPO; JPO; DERWENT; IBM_TDB)	OR	ON	ON	2020/05/27 10:06 AM
L481	98	"7388147"	(US-PGPUB; USPAT; USOCR; FPRS; EPO; JPO; DERWENT; IBM_TDB)	OR	ON	ON	2020/05/27 10:29 AM
L482	89	("20030160026" | "4234352" | "4478879" | "4557037" | "4920639" | "4927770" | "5053083" | "5151168" | "5310699" | "6551931" | "6638688").PN. OR ("7388147").URPN.	(US-PGPUB; USPAT; USOCR)	OR	ON	ON	2020/05/27 10:30 AM
L483	611	edge near isolation and (photovoltaic solar near2 (Cell battery module panel) photoelectric photocell photo?cell).ab.	(US-PGPUB; USPAT; USOCR; FPRS; EPO; JPO; DERWENT; IBM_TDB)	OR	ON	ON	2020/05/27 11:54 AM
L484	269	edge near isolation same (cut$3 saw$3 laser scribe) and (photovoltaic solar near2 (Cell battery module panel) photoelectric photocell photo?cell).ab.	(US-PGPUB; USPAT; USOCR; FPRS; EPO; JPO; DERWENT; IBM_TDB)	OR	ON	ON	2020/05/27 11:56 AM
L485	67	"4726850"	(US-PGPUB; USPAT; USOCR; FPRS; EPO; JPO; DERWENT; IBM_TDB)	OR	ON	ON	2020/05/27 11:58 AM
L486	16	"02103810"	(US-PGPUB; USPAT; USOCR; FPRS; EPO; JPO; DERWENT; IBM_TDB)	OR	ON	ON	2020/05/27 11:59 AM
L487	8	"20080121266"	(US-PGPUB; USPAT; USOCR; FPRS; EPO; JPO; DERWENT;	OR	ON	ON	2020/05/27 12:31 PM

			IBM_TDB)				
L488	47	(H01L31/0236 H01L31/0745 H01L31/1804 H01L31/022425 H01L31/068 H01L31/182 H01L31/056).cpc. and (Y02E10/52 Y02P70/521 Y02E10/547).cpc. and (polysilicon polycrystalline) near emitter and tunnel$3 near oxide	(US-PGPUB; USPAT; USOCR; FPRS; EPO; JPO; DERWENT; IBM_TDB)	OR	ON	ON	2020/05/27 12:52 PM
L489	242	((("COUSINS") near3 ("Peter"))).INV.	(US-PGPUB; USPAT; USOCR; EPO; JPO; DERWENT)	OR	ON	ON	2020/05/27 01:32 PM
L490	13	L489 and texture and antireflective and emitter	(US-PGPUB; USPAT; USOCR)	OR	ON	ON	2020/05/27 01:32 PM
L491	52	(point) near5 contact with (dot) and H01L31$.cpc.	(US-PGPUB; USPAT; USOCR; FPRS; EPO; JPO; DERWENT; IBM_TDB)	OR	ON	ON	2020/10/05 01:35 PM
L492	4568	(point) near5 contact and H01L31$.cpc.	(US-PGPUB; USPAT; USOCR; FPRS; EPO; JPO; DERWENT; IBM_TDB)	OR	ON	ON	2020/10/05 01:36 PM
L493	1299	(point) near5 contact and (circle dot spherical) and H01L31$.cpc.	(US-PGPUB; USPAT; USOCR; FPRS; EPO; JPO; DERWENT; IBM_TDB)	OR	ON	ON	2020/10/05 01:36 PM
L494	196	(point) near5 contact same (circle dot spherical) and H01L31$.cpc.	(US-PGPUB; USPAT; USOCR; FPRS; EPO; JPO; DERWENT; IBM_TDB)	OR	ON	ON	2020/10/05 01:37 PM
L495	92	(point) near5 contact with (circle dot spherical) and H01L31$.cpc.	(US-PGPUB; USPAT; USOCR; FPRS; EPO; JPO; DERWENT; IBM_TDB)	OR	ON	ON	2020/10/05 01:37 PM
L496	50	(H01L31/0236 H01L31/0745 H01L31/1804 H01L31/022425 H01L31/068 H01L31/182 H01L31/056).cpc. and (Y02E10/52 Y02P70/521 Y02E10/547).cpc. and (polysilicon polycrystalline) near emitter and tunnel$3 near oxide	(US-PGPUB; USPAT; USOCR; FPRS; EPO; JPO; DERWENT; IBM_TDB)	OR	ON	ON	2020/10/05 05:53 PM

L497	8	"20080121266"	(US-PGPUB; USPAT; USOCR; FPRS; EPO; JPO; DERWENT; IBM_TDB)	OR	ON	ON	2021/01/04 10:43 AM
L498	94	((US-20040112426-A1 OR US-20080121266-A1 OR US-20040063326-A1 OR US-20070186970-A1 OR US-20050268963-A1 OR US-20040097062-A1 OR US-20090101199-A1 OR US-20060196535-A1 OR US-20020153039-A1 OR US-20080223446-A1 OR US-20110104618-A1 OR US-20070151598-A1 OR US-20110162706-A1 OR US-20080092944-A1 OR US-20100000597-A1 OR US-20050017257-A1 OR US-20040003836-A1 OR US-20020142500-A1 OR US-20100186802-A1 OR US-20100087031-A1 OR US-20060255340-A1 OR US-20090142880-A1 OR US-20100186803-A1 OR US-20080216893-A1 OR US-20090301557-A1 OR US-20070137699-A1 OR US-20090205712-A1 OR US-20110139231-A1 OR US-20090183768-A1 OR US-20090017606-A1 OR US-20060060238-A1 OR US-20070256728-A1 OR US-20100224238-A1 OR US-20070151599-A1 OR US-20080092951-A1 OR US-20050272175-A1).did. AND PGPB.dbnm.) OR ((US-7468485-B1 OR US-20090205712-A1 OR US-20080121279-A1 OR JP-07106611-A OR WO-03083955-A1	(US-PGPUB; USPAT; USOCR; FIT (AU, AP, AT, BE, BG, BR, BY, CA, CH, CN, CS, CU, CZ, DD, DE, DK, EA, EE, EP, ES, FI, FR, GB, HR, HU, ID, IE, IL, IS, IT, JP, KR, LT, LU, LV, MA, OA, RU, SU, WO, MC, MD, MY, NL, NO, NZ, PH, PL, PT, RO, RS, SE, SG, SI, SK, TH, TN, TR, TW, UA, VN); FPRS; EPO; JPO; DERWENT; IBM_TDB)	OR	ON	ON	2023/01/17 11:08 PM

		OR JP-2004247364-A OR US-20040200520-A1 OR US-5030295-A OR WO-2007082760-A1 OR WO-2007130188-A2).did. AND DWPI.dbnm.) OR ((US-7468485-B1 OR US-6071753-A OR US-5258077-A OR US-6262359-B1 OR US-5899704-A OR US-6210991-B1 OR US-5320684-A OR US-4665277-A OR US-4379944-A OR US-5792280-A OR US-8878053-B2 OR US-6998288-B1 OR US-6214743-B1 OR US-6624049-B1 OR US-4927770-A OR US-7633006-B1 OR US-5057439-A OR US-3961997-A OR US-8222516-B2 OR US-7838400-B2 OR US-7554031-B2 OR US-7858430-B2 OR US-5563092-A OR US-6407012-B1 OR US-5030295-A OR US-7566974-B2 OR US-5538564-A OR US-8207444-B2 OR US-4865999-A OR US-7943416-B2 OR US-7704352-B2 OR US-7388147-B2 OR US-6461947-B1 OR US-4989059-A OR US-6146483-A OR US-6429037-B1 OR US-5759292-A OR US-5138256-A OR US-8207443-B2 OR US-5641362-A OR US-7029943-B2 OR US-4152824-A OR US-5738731-A OR US-6130380-A).did. AND USPT.dbnm.) OR ((WO-2009094578-A2 OR DE-102007035883-A1).did. AND EPAB.dbnm.) OR ((WO-2009094578-A3 OR WO-2009094578-					

		A2).did. AND FPRS.dbnm.)					
L504	77	L495	(US-PGPUB; USPAT; USOCR)	OR	ON	ON	2023/01/17 11:11 PM
L505	231	L484	(US-PGPUB; USPAT; USOCR)	OR	ON	ON	2023/01/17 11:11 PM
L506	886	L505	(US-PGPUB; USPAT; USOCR; FIT (AU, AP, AT, BE, BG, BR, BY, CA, CH, CN, CS, CU, CZ, DD, DE, DK, EA, EE, EP, ES, FI, FR, GB, HR, HU, ID, IE, IL, IS, IT, JP, KR, LT, LU, LV, MA, OA, RU, SU, WO, MC, MD, MY, NL, NO, NZ, PH, PL, PT, RO, RS, SE, SG, SI, SK, TH, TN, TR, TW, UA, VN); FPRS; EPO; JPO; DERWENT; IBM_TDB)	OR	ON	ON	2023/01/18 02:20 AM
L507	1	"17870268"	(US-PGPUB; USPAT; USOCR; FIT (AU, AP, AT, BE, BG, BR, BY, CA, CH, CN, CS, CU, CZ, DD, DE, DK, EA, EE, EP, ES, FI, FR, GB, HR, HU, ID, IE, IL, IS, IT, JP, KR, LT, LU, LV, MA, OA, RU, SU, WO, MC, MD, MY, NL, NO, NZ, PH, PL, PT, RO, RS, SE, SG, SI, SK, TH, TN, TR, TW, UA, VN); FPRS; EPO; JPO; DERWENT; IBM_TDB)	OR	ON	ON	2023/01/18 12:20 PM
L508	4	"16460035"	(US-PGPUB; USPAT; USOCR; FIT (AU, AP, AT, BE, BG, BR, BY, CA, CH, CN, CS, CU, CZ, DD, DE, DK, EA, EE, EP, ES, FI, FR, GB, HR, HU, ID, IE, IL, IS, IT, JP, KR, LT, LU, LV, MA, OA, RU, SU, WO, MC, MD, MY, NL, NO, NZ, PH, PL, PT, RO, RS, SE, SG, SI, SK, TH, TN, TR, TW, UA, VN); FPRS; EPO; JPO; DERWENT; IBM_TDB)	OR	ON	ON	2023/01/18 12:20 PM
L509	3	"16815844"	(US-PGPUB; USPAT; USOCR; FIT (AU, AP,	OR	ON	ON	2023/01/18 12:52 PM

			AT, BE, BG, BR, BY, CA, CH, CN, CS, CU, CZ, DD, DE, DK, EA, EE, EP, ES, FI, FR, GB, HR, HU, ID, IE, IL, IS, IT, JP, KR, LT, LU, LV, MA, OA, RU, SU, WO, MC, MD, MY, NL, NO, NZ, PH, PL, PT, RO, RS, SE, SG, SI, SK, TH, TN, TR, TW, UA, VN); FPRS; EPO; JPO; DERWENT; IBM_TDB)				
L510	18	("20100112792"|"20070256728"|"20060130891"|"20060196535"|"20120055547"|"20100218821").PN.	(US-PGPUB; USPAT; USOCR; FIT (AU, AP, AT, BE, BG, BR, BY, CA, CH, CN, CS, CU, CZ, DD, DE, DK, EA, EE, EP, ES, FI, FR, GB, HR, HU, ID, IE, IL, IS, IT, JP, KR, LT, LU, LV, MA, OA, RU, SU, WO, MC, MD, MY, NL, NO, NZ, PH, PL, PT, RO, RS, SE, SG, SI, SK, TH, TN, TR, TW, UA, VN); FPRS; EPO; JPO; DERWENT; IBM_TDB)	OR	ON	ON	2023/01/18 12:54 PM
L511	11	"20060130891"	(US-PGPUB; USPAT; USOCR; FIT (AU, AP, AT, BE, BG, BR, BY, CA, CH, CN, CS, CU, CZ, DD, DE, DK, EA, EE, EP, ES, FI, FR, GB, HR, HU, ID, IE, IL, IS, IT, JP, KR, LT, LU, LV, MA, OA, RU, SU, WO, MC, MD, MY, NL, NO, NZ, PH, PL, PT, RO, RS, SE, SG, SI, SK, TH, TN, TR, TW, UA, VN); FPRS; EPO; JPO; DERWENT; IBM_TDB)	OR	ON	ON	2023/01/18 01:07 PM
L512	95	((US-20060130891-A1 OR US-20040112426-A1 OR US-20080121266-A1 OR US-20040063326-A1 OR US-20070186970-A1 OR US-20050268963-A1 OR US-20040097062-A1 OR US-20090101199-A1 OR US-	(US-PGPUB; USPAT; USOCR; FIT (AU, AP, AT, BE, BG, BR, BY, CA, CH, CN, CS, CU, CZ, DD, DE, DK, EA, EE, EP, ES, FI, FR, GB, HR, HU, ID, IE, IL, IS, IT, JP, KR, LT, LU, LV, MA, OA, RU, SU, WO, MC, MD, MY, NL, NO, NZ, PH, PL, PT, RO,	OR	ON	ON	2023/01/18 01:16 PM

		20060196535-A1 OR US-20020153039-A1 OR US-20080223446-A1 OR US-20110104618-A1 OR US-20070151598-A1 OR US-20110162706-A1 OR US-20080092944-A1 OR US-20100000597-A1 OR US-20050017257-A1 OR US-20040003836-A1 OR US-20020142500-A1 OR US-20100186802-A1 OR US-20100087031-A1 OR US-20060255340-A1 OR US-20090142880-A1 OR US-20100186803-A1 OR US-20080216893-A1 OR US-20090301557-A1 OR US-20070137699-A1 OR US-20090205712-A1 OR US-20110139231-A1 OR US-20090183768-A1 OR US-20090017606-A1 OR US-20060060238-A1 OR US-20070256728-A1 OR US-20100224238-A1 OR US-20070151599-A1 OR US-20080092951-A1 OR US-20050272175-A1).did. AND PGPB.dbnm.) OR ((US-7468485-B1 OR US-20090205712-A1 OR US-20080121279-A1 OR JP-07106611-A OR WO-03083955-A1 OR JP-2004247364-A OR US-20040200520-A1 OR US-5030295-A OR WO-2007082760-A1 OR WO-2007130188-A2).did. AND DWPI.dbnm.) OR ((US-7468485-B1 OR US-6071753-A OR US-5258077-A OR US-6262359-B1 OR US-5899704-A OR US-6210991-B1 OR US-	RS, SE, SG, SI, SK, TH, TN, TR, TW, UA, VN); FPRS; EPO; JPO; DERWENT; IBM_TDB)				

		5320684-A OR US-4665277-A OR US-4379944-A OR US-7838400-B2 OR US-5792280-A OR US-8878053-B2 OR US-6998288-B1 OR US-6214743-B1 OR US-6624049-B1 OR US-4927770-A OR US-7633006-B1 OR US-5057439-A OR US-3961997-A OR US-8222516-B2 OR US-7554031-B2 OR US-7858430-B2 OR US-5563092-A OR US-6407012-B1 OR US-5030295-A OR US-7566974-B2 OR US-5538564-A OR US-8207444-B2 OR US-4865999-A OR US-7943416-B2 OR US-7704352-B2 OR US-7388147-B2 OR US-6461947-B1 OR US-4989059-A OR US-6146483-A OR US-6429037-B1 OR US-5759292-A OR US-5138256-A OR US-8207443-B2 OR US-5641362-A OR US-7029943-B2 OR US-4152824-A OR US-5738731-A OR US-6130380-A).did. AND USPT.dbnm.) OR ((WO-2009094578-A2 OR DE-102007035883-A1).did. AND EPAB.dbnm.) OR ((WO-2009094578-A3 OR WO-2009094578-A2).did. AND FPRS.dbnm.)					
L513	30	L512 AND thermal NEAR oxid$5	(US-PGPUB; USPAT; USOCR; FIT (AU, AP, AT, BE, BG, BR, BY, CA, CH, CN, CS, CU, CZ, DD, DE, DK, EA, EE, EP, ES, FI, FR, GB, HR, HU, ID, IE, IL, IS, IT, JP, KR, LT, LU, LV, MA, OA, RU, SU, WO, MC, MD, MY, NL, NO, NZ, PH, PL, PT, RO,	OR	ON	ON	2023/01/18 01:17 PM

			RS, SE, SG, SI, SK, TH, TN, TR, TW, UA, VN); FPRS; EPO; JPO; DERWENT; IBM_TDB)				
L514	595	(front NEAR surface NEAR field FSF) AND (thermal NEAR oxid$5) SAME (nitride SiN$3)	(US-PGPUB; USPAT; USOCR; FIT (AU, AP, AT, BE, BG, BR, BY, CA, CH, CN, CS, CU, CZ, DD, DE, DK, EA, EE, EP, ES, FI, FR, GB, HR, HU, ID, IE, IL, IS, IT, JP, KR, LT, LU, LV, MA, OA, RU, SU, WO, MC, MD, MY, NL, NO, NZ, PH, PL, PT, RO, RS, SE, SG, SI, SK, TH, TN, TR, TW, UA, VN); FPRS; EPO; JPO; DERWENT; IBM_TDB)	OR	ON	ON	2023/01/18 01:36 PM
L515	438	(front NEAR surface NEAR field FSF) AND (thermal NEAR oxid$5) SAME (nitride SiN$3) AND (solar photoelectric photovoltaic).ab.	(US-PGPUB; USPAT; USOCR; FIT (AU, AP, AT, BE, BG, BR, BY, CA, CH, CN, CS, CU, CZ, DD, DE, DK, EA, EE, EP, ES, FI, FR, GB, HR, HU, ID, IE, IL, IS, IT, JP, KR, LT, LU, LV, MA, OA, RU, SU, WO, MC, MD, MY, NL, NO, NZ, PH, PL, PT, RO, RS, SE, SG, SI, SK, TH, TN, TR, TW, UA, VN); FPRS; EPO; JPO; DERWENT; IBM_TDB)	OR	ON	ON	2023/01/18 01:36 PM
L516	4	L498 AND busbar	(US-PGPUB; USPAT; USOCR; FIT (AU, AP, AT, BE, BG, BR, BY, CA, CH, CN, CS, CU, CZ, DD, DE, DK, EA, EE, EP, ES, FI, FR, GB, HR, HU, ID, IE, IL, IS, IT, JP, KR, LT, LU, LV, MA, OA, RU, SU, WO, MC, MD, MY, NL, NO, NZ, PH, PL, PT, RO, RS, SE, SG, SI, SK, TH, TN, TR, TW, UA, VN); FPRS; EPO; JPO; DERWENT; IBM_TDB)	OR	ON	ON	2023/01/18 03:30 PM
L517	2	L498 AND bus?bar	(US-PGPUB; USPAT; USOCR; FIT (AU, AP, AT, BE, BG, BR, BY, CA, CH, CN, CS, CU,	OR	ON	ON	2023/01/18 03:30 PM

			CZ, DD, DE, DK, EA, EE, EP, ES, FI, FR, GB, HR, HU, ID, IE, IL, IS, IT, JP, KR, LT, LU, LV, MA, OA, RU, SU, WO, MC, MD, MY, NL, NO, NZ, PH, PL, PT, RO, RS, SE, SG, SI, SK, TH, TN, TR, TW, UA, VN); FPRS; EPO; JPO; DERWENT; IBM_TDB)				
L518	97	((US-20060130891-A1 OR US-20040112426-A1 OR US-20080121266-A1 OR US-20040063326-A1 OR US-20070186970-A1 OR US-20050268963-A1 OR US-20040097062-A1 OR US-20090101199-A1 OR US-20060196535-A1 OR US-20020153039-A1 OR US-20070151598-A1 OR US-20090142880-A1 OR US-20080223446-A1 OR US-20110104618-A1 OR US-20110162706-A1 OR US-20080092944-A1 OR US-20100000597-A1 OR US-20050017257-A1 OR US-20040003836-A1 OR US-20020142500-A1 OR US-20100186802-A1 OR US-20100087031-A1 OR US-20060255340-A1 OR US-20100186803-A1 OR US-20080216893-A1 OR US-20090301557-A1 OR US-20070137699-A1 OR US-20090205712-A1 OR US-20110139231-A1 OR US-20090183768-A1 OR US-20090017606-A1 OR US-20060060238-A1 OR US-20070256728-A1 OR US-20100224238-A1 OR US-20070151599-	(US-PGPUB; USPAT; USOCR; FIT (AU, AP, AT, BE, BG, BR, BY, CA, CH, CN, CS, CU, CZ, DD, DE, DK, EA, EE, EP, ES, FI, FR, GB, HR, HU, ID, IE, IL, IS, IT, JP, KR, LT, LU, LV, MA, OA, RU, SU, WO, MC, MD, MY, NL, NO, NZ, PH, PL, PT, RO, RS, SE, SG, SI, SK, TH, TN, TR, TW, UA, VN); FPRS; EPO; JPO; DERWENT; IBM_TDB)	OR	ON	ON	2023/01/18 03:32 PM

		A1 OR US-20080092951-A1 OR US-20050272175-A1).did. AND PGPB.dbnm.) OR ((JP-2007281044-A OR JP-H0823109-A).did. AND FTDB.dbnm.) OR ((US-7468485-B1 OR US-20090205712-A1 OR US-20080121279-A1 OR JP-07106611-A OR WO-03083955-A1 OR JP-2004247364-A OR US-20040200520-A1 OR US-5030295-A OR WO-2007082760-A1 OR WO-2007130188-A2).did. AND DWPI.dbnm.) OR ((US-7468485-B1 OR US-6071753-A OR US-5258077-A OR US-6262359-B1 OR US-5899704-A OR US-6210991-B1 OR US-5320684-A OR US-4665277-A OR US-4379944-A OR US-7838400-B2 OR US-6624049-B1 OR US-5792280-A OR US-8878053-B2 OR US-6998288-B1 OR US-6214743-B1 OR US-4927770-A OR US-7633006-B1 OR US-5057439-A OR US-3961997-A OR US-8222516-B2 OR US-7554031-B2 OR US-7858430-B2 OR US-5563092-A OR US-6407012-B1 OR US-5030295-A OR US-7566974-B2 OR US-5538564-A OR US-8207444-B2 OR US-4865999-A OR US-7943416-B2 OR US-7704352-B2 OR US-7388147-B2 OR US-6461947-B1 OR US-4989059-A OR US-6146483-A OR US-6429037-B1 OR US-5759292-A OR US-5138256-A OR US-					

		8207443-B2 OR US-5641362-A OR US-7029943-B2 OR US-4152824-A OR US-5738731-A OR US-6130380-A).did. AND USPT.dbnm.) OR ((WO-2009094578-A2 OR DE-102007035883-A1).did. AND EPAB.dbnm.) OR ((WO-2009094578-A3 OR WO-2009094578-A2).did. AND FPRS.dbnm.)					
L519	11	"20080121266"	(US-PGPUB; USPAT; USOCR; FIT (AU, AP, AT, BE, BG, BR, BY, CA, CH, CN, CS, CU, CZ, DD, DE, DK, EA, EE, EP, ES, FI, FR, GB, HR, HU, ID, IE, IL, IS, IT, JP, KR, LT, LU, LV, MA, OA, RU, SU, WO, MC, MD, MY, NL, NO, NZ, PH, PL, PT, RO, RS, SE, SG, SI, SK, TH, TN, TR, TW, UA, VN); FPRS; EPO; JPO; DERWENT; IBM_TDB)	OR	ON	ON	2023/01/18 03:37 PM
L520	9	"12070742"	(US-PGPUB; USPAT; USOCR; FIT (AU, AP, AT, BE, BG, BR, BY, CA, CH, CN, CS, CU, CZ, DD, DE, DK, EA, EE, EP, ES, FI, FR, GB, HR, HU, ID, IE, IL, IS, IT, JP, KR, LT, LU, LV, MA, OA, RU, SU, WO, MC, MD, MY, NL, NO, NZ, PH, PL, PT, RO, RS, SE, SG, SI, SK, TH, TN, TR, TW, UA, VN); FPRS; EPO; JPO; DERWENT; IBM_TDB)	OR	ON	ON	2023/01/18 04:05 PM
L521	747	((("SUNPOWER") near3 ("CORPORATION"))).AS,AANM.	(USPAT)	OR	ON	ON	2023/01/18 04:34 PM
L522	268	((("COUSINS") near3 ("Peter"))).INV.	(US-PGPUB; USPAT; USOCR; EPO; JPO; DERWENT)	OR	ON	ON	2023/01/18 04:34 PM
L523	159	(L521 L522) AND L457	(US-PGPUB; USPAT; USOCR; FIT (AU, AP,	OR	ON	ON	2023/01/18 04:35 PM

			AT, BE, BG, BR, BY, CA, CH, CN, CS, CU, CZ, DD, DE, DK, EA, EE, EP, ES, FI, FR, GB, HR, HU, ID, IE, IL, IS, IT, JP, KR, LT, LU, LV, MA, OA, RU, SU, WO, MC, MD, MY, NL, NO, NZ, PH, PL, PT, RO, RS, SE, SG, SI, SK, TH, TN, TR, TW, UA, VN); FPRS; EPO; JPO; DERWENT; IBM_TDB)				
L524	90	(L521 L522) AND L457	(US-PGPUB; USPAT)	OR	ON	ON	2023/01/18 04:35 PM

PE2E SEARCH - Search History (Interference)

There are no Interference searches to show.

Bibliographic Data

Application No: 17/870,268

Foreign Priority claimed: ○ Yes ◉ No

35 USC 119 (a-d) conditions met: ☐ Yes ☑ No ☐ Met After Allowance

Verified and Acknowledged: /DEVINA PILLAY/ [ ]

Examiner's Signature Initials

Title: FRONT CONTACT SOLAR CELL WITH FORMED EMITTER

FILING or 371(c) DATE	CLASS	GROUP ART UNIT	ATTORNEY DOCKET NO.
07/21/2022 **RULE**	136	1726	SKYW00056-1C US

APPLICANTS

SunPower Corporation, San Jose, CA,

INVENTORS

Peter John COUSINS, Menlo Park, CA, UNITED STATES

CONTINUING DATA

This application is a CON of 16460035 07/02/2019ABN

16460035 is a CON of 14504771 10/02/2014ABN

14504771 is a CON of 13495577 06/13/2012 PAT 8878053

13495577 is a DIV of 12070742 02/20/2008 PAT 8222516

FOREIGN APPLICATIONS

IF REQUIRED, FOREIGN LICENSE GRANTED**

08/01/2022

STATE OR COUNTRY

UNITED STATES

ADDRESS

Schmidt Patent Law, Inc.
2635 N. First Street
Suite 150
San Jose, CA 95134-2000
UNITED STATES

FILING FEE RECEIVED

$1,980

Doc code: IDS
Doc description: Information Disclosure Statement (IDS) Filed

PTO/SB/08a (01-22)
Approved for use through 05/31/2024. OMB 0651-0031
U.S. Patent and Trademark Office; U.S. DEPARTMENT OF COMMERCE
Under the Paperwork Reduction Act of 1995, no persons are required to respond to a collection of information unless it contains a valid OMB control number.

INFORMATION DISCLOSURE STATEMENT BY APPLICANT

(Not for submission under 37 CFR 1.99)

Application Number	17870268
Filing Date	2022-07-21
First Named Inventor	Peter John Cousins
Art Unit	1726
Examiner Name	DEVINA PILLAY
Attorney Docket Number	SKYW00056-1C US

U.S.PATENTS Remove

Examiner Initial*	Cite No	Patent Number	Kind Code[1]	Issue Date	Name of Patentee or Applicant of cited Document	Pages,Columns,Lines where Relevant Passages or Relevant Figures Appear
	1	8878053	B2	2014-11-04	Cousins	
	2	8222516	B2	2012-07-17	Cousins	
	3	3961997		1976-06-08	Chu	
	4	4427839		1984-01-24	Hall	
	5	4665277		1987-05-12	Sah et al.	
	6	4927770		1990-05-22	Swanson	
	7	5030295		1991-07-09	Swanson et al.	
	8	5053083		1991-10-01	Sinton	

ALL REFERENCES CONSIDERED EXCEPT WHERE LINED THROUGH. /D.P./

INFORMATION DISCLOSURE STATEMENT BY APPLICANT (Not for submission under 37 CFR 1.99)		
	Application Number	17870268
	Filing Date	2022-07-21
	First Named Inventor	Peter John Cousins
	Art Unit	1726
	Examiner Name	DEVINA PILLAY
	Attorney Docket Number	SKYW00056-1C US

	9	5057439		1991-10-15	Swanson et al.	
	10	5217539		1993-06-08	Fraas et al.	
	11	5266125		1993-11-30	Rand et al.	
	12	5360990		1994-11-01	Swandon	
	13	5369291		1994-11-29	Swanson	
	14	5449626		1995-09-12	Hezel	
	15	5479018		1995-12-26	McKee et al.	
	16	5620904		1997-04-15	Hanoka	
	17	5641362		1997-06-24	Meier	
	18	5693578		1997-12-02	Nakanishi et al.	
	19	6262359		2001-07-17	Meier et al.	

ALL REFERENCES CONSIDERED EXCEPT WHERE LINED THROUGH. /D.P./

INFORMATION DISCLOSURE STATEMENT BY APPLICANT (Not for submission under 37 CFR 1.99)		
	Application Number	17870268
	Filing Date	2022-07-21
	First Named Inventor	Peter John Cousins
	Art Unit	1726
	Examiner Name	DEVINA PILLAY
	Attorney Docket Number	SKYW00056-1C US

	20	6274402	B1	2001-08-14	Verlinden et al.	
	21	6313395	B1	2001-11-06	Crane et al.	
	22	6333457	B1	2001-12-25	Mulligan et al.	
	23	6337283	B1	2002-01-08	Verlinden et al.	
	24	6387726	B1	2002-05-14	Verlinden et al.	
	25	6423568	B1	2002-07-23	Verlinden et al.	
	26	6524880	B2	2003-02-25	Moon et al.	
	27	6638788	B2	2003-10-28	Emoto et al.	
	28	6998288	B1	2006-02-14	Smith et al.	
	29	6135350	B1	2006-10-24	White et al.	
	30	7468485	B1	2008-12-23	Swanson	

ALL REFERENCES CONSIDERED EXCEPT WHERE LINED THROUGH. /D.P./

INFORMATION DISCLOSURE STATEMENT BY APPLICANT (Not for submission under 37 CFR 1.99)		
	Application Number	17870268
	Filing Date	2022-07-21
	First Named Inventor	Peter John Cousins
	Art Unit	1726
	Examiner Name	DEVINA PILLAY
	Attorney Docket Number	SKYW00056-1C US

	31	7633006	B1	2009-12-15	Swanson	
	32	8207444	B2	2012-06-26	Cousins	
	33	4492743		1983-01-08	Howe	
	34	4398054		1983-08-09	Madan	
	35	7998863	B2	2011-08-16	Wenham et al.	
	36	4900369		1990-02-13	Hezel et al.	
	37	4589191		1986-05-20	Green et al.	
	38	6429037	B1	2002-08-06	Wenham et al.	
	39	4865999		1989-09-12	Xi et al.	
	40	4525593		1985-06-25	Yablonovitch	
	41	6379994	B1	2002-04-30	Sano et al.	

ALL REFERENCES CONSIDERED EXCEPT WHERE LINED THROUGH. /D.P./

INFORMATION DISCLOSURE STATEMENT BY APPLICANT

(Not for submission under 37 CFR 1.99)

Application Number	17870268
Filing Date	2022-07-21
First Named Inventor	Peter John Cousins
Art Unit	1726
Examiner Name	DEVINA PILLAY
Attorney Docket Number	SKYW00056-1C US

If you wish to add additional U.S. Patent citation information please click the Add button. Add

U.S.PATENT APPLICATION PUBLICATIONS Remove

Examiner Initial*	Cite No	Publication Number	Kind Code[1]	Publication Date	Name of Patentee or Applicant of cited Document	Pages,Columns,Lines where Relevant Passages or Relevant Figures Appear
	1	20020153039	A1	2002-10-24	Moon et al.	
	2	20030134469	A1	2003-07-17	Horzel et al.	
	3	20040200520	A1	2004-10-14	Mulligan et al.	
	4	20050016585	A1	2005-01-27	Munzer	
	5	20050268963	A1	2005-12-08	Jordan et al.	
	6	20060096635	A1	2006-05-11	Tuttle	
	7	20060130891	A1	2006-06-22	Carlson	
	8	20060157103	A1	2006-07-20	Sheats et al.	
	9	20060185716	A1	2006-08-24	Murozono et al.	

ALL REFERENCES CONSIDERED EXCEPT WHERE LINED THROUGH. /D.P./

INFORMATION DISCLOSURE STATEMENT BY APPLICANT (Not for submission under 37 CFR 1.99)		
	Application Number	17870268
	Filing Date	2022-07-21
	First Named Inventor	Peter John Cousins
	Art Unit	1726
	Examiner Name	DEVINA PILLAY
	Attorney Docket Number	SKYW00056-1C US

	10	20070023081	A1	2007-02-01	Johnson et al.	
	11	20070082206	A1	2007-04-12	Hartig	
	12	20080078444	A1	2008-04-03	Atanackovic	
	13	20080173347	A1	2008-07-24	Korevaar et al.	
	14	20090159111	A1	2009-06-25	Jawarani et al.	
	15	20110114171	A1	2011-05-19	Meier et al.	
	16	20070256728	A1	2007-11-08	Cousins	
	17	20070194399	A1	2007-08-23	Bhattacharyya	
	18	20090301557	A1	2009-12-10	Agostinelli et al.	
	19	20080216893	A1	2008-09-11	Russell et al.	
	20	20080121266	A1	2008-05-29	Tsunomura et al.	

ALL REFERENCES CONSIDERED EXCEPT WHERE LINED THROUGH. /D.P./

INFORMATION DISCLOSURE STATEMENT BY APPLICANT (Not for submission under 37 CFR 1.99)		
	Application Number	17870268
	Filing Date	2022-07-21
	First Named Inventor	Peter John Cousins
	Art Unit	1726
	Examiner Name	DEVINA PILLAY
	Attorney Docket Number	SKYW00056-1C US

	21	20070151599	A1	2007-07-05	Cousins			

If you wish to add additional U.S. Published Application citation information please click the Add button. Add

FOREIGN PATENT DOCUMENTS Remove

Examiner Initial*	Cite No	Foreign Document Number[3]	Country Code[2] i	Kind Code[4]	Publication Date	Name of Patentee or Applicant of cited Document	Pages,Columns,Lines where Relevant Passages or Relevant Figures Appear	T[5]
	1	2008/004791	WO	A1	2008-01-10	LG ELECTRONICS INC.		
	2	07-106611	JP	A	1995-04-21	TONEN CORP		
	3	2009/094578	WO	A2	2009-07-30	APPLIED MATERIALS, INC.		
	4	2009/094570	WO	A2	2009-07-30	APPLIED MATERIALS, INC.		

If you wish to add additional Foreign Patent Document citation information please click the Add button Add

NON-PATENT LITERATURE DOCUMENTS Remove

Examiner Initials*	Cite No	Include name of the author (in CAPITAL LETTERS), title of the article (when appropriate), title of the item (book, magazine, journal, serial, symposium, catalog, etc), date, pages(s), volume-issue number(s), publisher, city and/or country where published.	T[5]
	1	LINDHOLM, "Heavily doped Polysilicon-Contact Solar Cells", IEEE Electron Device Letters, vol. EDI.6, No. 7. pp. 363-365, Jul. 1985.	
	2	SILVESTRE, "Series Resistance in Double-Polysilicon Contacted Silicon Solar Cells", IEEE, 25th PVSC Washington DC, May 1996, pp. 497-500	

ALL REFERENCES CONSIDERED EXCEPT WHERE LINED THROUGH. /D.P./

INFORMATION DISCLOSURE STATEMENT BY APPLICANT (Not for submission under 37 CFR 1.99)		
	Application Number	17870268
	Filing Date	2022-07-21
	First Named Inventor	Peter John Cousins
	Art Unit	1726
	Examiner Name	DEVINA PILLAY
	Attorney Docket Number	SKYW00056-1C US

	3	PCT International Search Report for Application No. PCT/US09/32345, March 23, 2009, 2 sheets.	
	4	W.P. MULLIGAN et al., "A Flat-Plate Concentrator: Micro-Concentrator Design Overview", 2000, 3 sheets, Proceedings of the 28th IEEE PVSC.	
	5	K.R. McINTOSH, et al., "The Choice of Silicon Wafer for the Production of Low-Cost Rear-Contaft Solar Cells", May 2003, 4 sheets, SunPower Corporation, Sunnyvale, California.	
	6	P.J. VERLINDEN et al., "Will We have a 20%-Efficient (PTC) Photovoltaic System?" 2001, 6 sheets, Proceedings of the 17th Europe Photovoltaic Solar Energy Conference.	
	7	W.P. MULLIGAN et al., "Development of Chi0Size Silicon Solar Cells", 2000, 6 sheets, Proceedings of the 28th IEEE PVSC.	
	8	TERAO et al., "A Mirror-Less Design for Micro-Concentrator Modules", 2000, 4 sheets, Proceedings of the 28th IEEE PVSC.	
	9	P.J. VERLINDEN et al., "Backside-Contact Silicon Solar Cells with Improved Efficiency for the '96 World Solar Challenge", 1997, 5 sheets, Proceedings of the 15th EPSEC.	
	10	P.J. VERLINDEN, et al., On-Year Comparison of a Concentrator Module with Silicon Point-Contact Solar Cell to a Fixed Flat Plate Module in Northern California", 2000, 4 sheets, Proceedings of the 16th EPSEC.	
	11	Richard M. Swanson, "The Promise of Concentrators", 2000, Prog. Photovolt. Res. Appl. 8 pp., 93-111.	
	12	Ronald A. Sinton et al., "Device Physics and Characterization of silicon Point-Contact Solar Cells", Feb. 1997, pp. 1-154, Stanford Electronics Laboratories, Stanford University, CA.	
	13	Richard Roland King, "Studies of Oxide-Passivated Emitters in Silicon and Applications to Solar Cells", Aug. 1990, pp. 1-200, (Thesis) Electrical Engineering Department of Stanford University, CA.	

ALL REFERENCES CONSIDERED EXCEPT WHERE LINED THROUGH. /D.P./

INFORMATION DISCLOSURE STATEMENT BY APPLICANT (Not for submission under 37 CFR 1.99)		
	Application Number	17870268
	Filing Date	2022-07-21
	First Named Inventor	Peter John Cousins
	Art Unit	1726
	Examiner Name	DEVINA PILLAY
	Attorney Docket Number	SKYW00056-1C US

	14	Certified copy of priority document number US 61/023,342 filed 24 January 2008, 18 pages.	
	15	GAN, "Polysilicon emitters for silicon concentrator solar cells", Stanford University, 1990, 147 pages.	
	16	CHUANG et al., "Modeling and Characterization of SIPOS Emitter and Quasi-SIS Emitter Bipolar Transistors", IEEE Transactions on Electron Devices, Vol. 40, No. 4, April 1993, 8 pages.	
	17	GREEN et al., "High-Efficiency Silicon Solar Cells", IEEE Transactions on Electron Devices, Vol. ED-31, No. 5, May 1994, 5 pages.	
	18	SHEWCHUN et al., "MIS and SIS Solar Cells", IEEE Transactions on Electron Devices, Vol. ED-37, No. 4, April 1980, 12 pages.	
	19	OSIPOV, "Optically Induced Switching in BiStable Structures: Heavily Doped N+- Polysilicon-Tunnel Oxide Layer - n - Silicon, 375-382 © 1998 Kluwer Academic Publishers, pp. 375-382.	
	20	KRAY, "Study on the edge isolation of industrial silicon solar cells with waterjet-guided laser", Solar Energy Materials & Solar Cells 91 (2007) 1638-1644 (Year: 2007).	

If you wish to add additional non-patent literature document citation information please click the Add button Add

EXAMINER SIGNATURE

Examiner Signature	/DEVINA PILLAY/	Date Considered	02/13/2024

*EXAMINER: Initial if reference considered, whether or not citation is in conformance with MPEP 609. Draw line through a citation if not in conformance and not considered. Include copy of this form with next communication to applicant.

[1] See Kind Codes of USPTO Patent Documents at www.USPTO.GOV or MPEP 901.04. [2] Enter office that issued the document, by the two-letter code (WIPO Standard ST.3). [3] For Japanese patent documents, the indication of the year of the reign of the Emperor must precede the serial number of the patent document. [4] Kind of document by the appropriate symbols as indicated on the document under WIPO Standard ST.16 if possible. [5] Applicant is to place a check mark here if English language translation is attached.

ALL REFERENCES CONSIDERED EXCEPT WHERE LINED THROUGH. /D.P./

INFORMATION DISCLOSURE STATEMENT BY APPLICANT

(Not for submission under 37 CFR 1.99)

Application Number	17870268
Filing Date	2022-07-21
First Named Inventor	Peter John Cousins
Art Unit	1726
Examiner Name	DEVINA PILLAY
Attorney Docket Number	SKYW00056-1C US

CERTIFICATION STATEMENT

Please see 37 CFR 1.97 and 1.98 to make the appropriate selection(s):

That each item of information contained in the information disclosure statement was first cited in any communication from a foreign patent office in a counterpart foreign application not more than three months prior to the filing of the information disclosure statement. See 37 CFR 1.97(e)(1).

OR

☐ That no item of information contained in the information disclosure statement was cited in a communication from a foreign patent office in a counterpart foreign application, and, to the knowledge of the person signing the certification after making reasonable inquiry, no item of information contained in the information disclosure statement was known to any individual designated in 37 CFR 1.56(c) more than three months prior to the filing of the information disclosure statement. See 37 CFR 1.97(e)(2).

See attached certification statement.

The fee set forth in 37 CFR 1.17 (p) has been submitted herewith.

X A certification statement is not submitted herewith.

SIGNATURE

A signature of the applicant or representative is required in accordance with CFR 1.33, 10.18. Please see CFR 1.4(d) for the form of the signature.

Signature	/Jackson Ho/	Date (YYYY-MM-DD)	2023-02-16
Name/Print	Jackson Ho	Registration Number	72,360

This collection of information is required by 37 CFR 1.97 and 1.98. The information is required to obtain or retain a benefit by the public which is to file (and by the USPTO to process) an application. Confidentiality is governed by 35 U.S.C. 122 and 37 CFR 1.14. This collection is estimated to take 1 hour to complete, including gathering, preparing and submitting the completed application form to the USPTO. Time will vary depending upon the individual case. Any comments on the amount of time you require to complete this form and/or suggestions for reducing this burden, should be sent to the Chief Information Officer, U.S. Patent and Trademark Office, U.S. Department of Commerce, P.O. Box 1450, Alexandria, VA 22313-1450. DO NOT SEND FEES OR COMPLETED FORMS TO THIS ADDRESS. **SEND TO: Commissioner for Patents, P.O. Box 1450, Alexandria, VA 22313-1450.**

ALL REFERENCES CONSIDERED EXCEPT WHERE LINED THROUGH. /D.P./

Privacy Act Statement

The Privacy Act of 1974 (P.L. 93-579) requires that you be given certain information in connection with your submission of the attached form related to a patent application or patent. Accordingly, pursuant to the requirements of the Act, please be advised that: (1) the general authority for the collection of this information is 35 U.S.C. 2(b)(2); (2) furnishing of the information solicited is voluntary; and (3) the principal purpose for which the information is used by the U.S. Patent and Trademark Office is to process and/or examine your submission related to a patent application or patent. If you do not furnish the requested information, the U.S. Patent and Trademark Office may not be able to process and/or examine your submission, which may result in termination of proceedings or abandonment of the application or expiration of the patent.

The information provided by you in this form will be subject to the following routine uses:

1. The information on this form will be treated confidentially to the extent allowed under the Freedom of Information Act (5 U.S.C. 552) and the Privacy Act (5 U.S.C. 552a). Records from this system of records may be disclosed to the Department of Justice to determine whether the Freedom of Information Act requires disclosure of these record s.

2. A record from this system of records may be disclosed, as a routine use, in the course of presenting evidence to a court, magistrate, or administrative tribunal, including disclosures to opposing counsel in the course of settlement negotiations.

3. A record in this system of records may be disclosed, as a routine use, to a Member of Congress submitting a request involving an individual, to whom the record pertains, when the individual has requested assistance from the Member with respect to the subject matter of the record.

4. A record in this system of records may be disclosed, as a routine use, to a contractor of the Agency having need for the information in order to perform a contract. Recipients of information shall be required to comply with the requirements of the Privacy Act of 1974, as amended, pursuant to 5 U.S.C. 552a(m).

5. A record related to an International Application filed under the Patent Cooperation Treaty in this system of records may be disclosed, as a routine use, to the International Bureau of the World Intellectual Property Organization, pursuant to the Patent Cooperation Treaty.

6. A record in this system of records may be disclosed, as a routine use, to another federal agency for purposes of National Security review (35 U.S.C. 181) and for review pursuant to the Atomic Energy Act (42 U.S.C. 218(c)).

7. A record from this system of records may be disclosed, as a routine use, to the Administrator, General Services, or his/her designee, during an inspection of records conducted by GSA as part of that agency's responsibility to recommend improvements in records management practices and programs, under authority of 44 U.S.C. 2904 and 2906. Such disclosure shall be made in accordance with the GSA regulations governing inspection of records for this purpose, and any other relevant (i.e., GSA or Commerce) directive. Such disclosure shall not be used to make determinations about individuals.

8. A record from this system of records may be disclosed, as a routine use, to the public after either publication of the application pursuant to 35 U.S.C. 122(b) or issuance of a patent pursuant to 35 U.S.C. 151. Further, a record may be disclosed, subject to the limitations of 37 CFR 1.14, as a routine use, to the public if the record was filed in an application which became abandoned or in which the proceedings were terminated and which application is referenced by either a published application, an application open to public inspections or an issued patent.

9. A record from this system of records may be disclosed, as a routine use, to a Federal, State, or local law enforcement agency, if the USPTO becomes aware of a violation or potential violation of law or regulation.

ALL REFERENCES CONSIDERED EXCEPT WHERE LINED THROUGH. /D.P./

Doc Code: TRAN.LET

Document Description: Transmittal Letter

PTO/SB/21 (07-09)
Approved for use through 05/31/2024. OMB 0651-0031
U.S. Patent and Trademark Office; U.S. DEPARTMENT OF COMMERCE
Under the Paperwork Reduction Act of 1995, no persons are required to respond to a collection of information unless it displays a valid OMB control number.

TRANSMITTAL FORM

(to be used for all correspondence after initial filing)

Application Number	17/870,268
Filing Date	07/21/2022
First Named Inventor	Peter John COUSINS
Art Unit	1726
Examiner Name	DEVINA PILLAY
Attorney Docket Number	SKYW00056-1C US
Total Number of Pages in This Submission	1

ENCLOSURES *(Check all that apply)*

- [x] Fee Transmittal Form
  - [x] Fee Attached
- [ ] Amendment/Reply
  - [ ] After Final
  - [ ] Affidavits/declaration(s)
- [x] Extension of Time Request
- [ ] Express Abandonment Request
- [ ] Information Disclosure Statement
- [ ] Certified Copy of Priority Document(s)
- [ ] Reply to Missing Parts/ Incomplete Application
  - [ ] Reply to Missing Parts under 37 CFR 1.52 or 1.53
- [ ] Drawing(s)
- [ ] Licensing-related Papers
- [ ] Petition
- [ ] Petition to Convert to a Provisional Application
- [ ] Power of Attorney, Revocation Change of Correspondence Address
- [ ] Terminal Disclaimer
- [ ] Request for Refund
- [ ] CD, Number of CD(s) _____
  - [ ] Landscape Table on CD
- [ ] After Allowance Communication to TC
- [ ] Appeal Communication to Board of Appeals and Interferences
- [ ] Appeal Communication to TC **(Appeal Notice, Brief, Reply Brief)**
- [ ] Proprietary Information
- [ ] Status Letter
- [ ] Other Enclosure(s) (please Identify below):

Remarks

Under 37 CFR 1.17(a)(3) Request and pay three month extension fee; OA dated 02/20/2024.

SIGNATURE OF APPLICANT, ATTORNEY, OR AGENT

Firm Name	Schmidt Patent Law, Inc.		
Signature	/Jackson Ho/		
Printed name	Jackson Ho		
Date	08/12/2024	Reg. No.	72,360

CERTIFICATE OF TRANSMISSION/MAILING

I hereby certify that this correspondence is being facsimile transmitted to the USPTO or deposited with the United States Postal Service with sufficient postage as first class mail in an envelope addressed to: Commissioner for Patents, P.O. Box 1450, Alexandria, VA 22313-1450 on the date shown below:

Signature	/Jackson Ho, Reg. No. 72,360/		
Typed or printed name	Jackson Ho, Reg. No. 72,360	Date	08/12/2024

A Federal agency may not conduct or sponsor, and a person is not required to respond to, nor shall a person be subject to a penalty for failure to comply with an information collection subject to the requirements of the Paperwork Reduction Act of 1995, unless the information collection has a currently valid OMB Control Number. The OMB Control Number for this information collection is 0651-0031. Public burden for this form is estimated to average 2 hours per response, including the time for reviewing instructions, searching existing data sources, gathering and maintaining the data needed, and completing and reviewing the information collection. Send comments regarding this burden estimate or any other aspect of this information collection, including suggestions for reducing this burden to the Chief Administrative Officer, United States Patent and Trademark Office, P.O. Box 1450, Alexandria, VA 22313-1450 or email InformationCollection@uspto.gov. **DO NOT SEND FEES OR COMPLETED FORMS TO THIS ADDRESS. If filing this completed form by mail, send to: Commissioner for Patents, P.O. Box 1450, Alexandria, VA 22313-1450.**

If you need assistance in completing the form, call 1-800-PTO-9199 and select option 2.

Privacy Act Statement

The Privacy Act of 1974 (P.L. 93-579) requires that you be given certain information in connection with your submission of the attached form related to a patent application or patent. The United States Patent and Trademark Office (USPTO) collects the information in this record under authority of 35 U.S.C. 2. The USPTO's system of records is used to manage all applicant and owner information including name, citizenship, residence, post office address, and other information with respect to inventors and their legal representatives pertaining to the applicant's/owner's activities in connection with the invention for which a patent is sought or has been granted. The applicable Privacy Act System of Records Notice for the information collected in this form is COMMERCE/PAT-TM-7 Patent Application Files, available in the Federal Register at 78 FR 19243 (March 29, 2013). https://www.govinfo.gov/content/pkg/FR-2013-03-29/pdf/2013-07341.pdf

Routine uses of the information in this record may include disclosure to: 1) law enforcement, in the event that the system of records indicates a violation or potential violation of law; 2) a Federal, state, local, or international agency, in response to its request; 3) a contractor of the USPTO having need for the information in order to perform a contract; 4) the Department of Justice for determination of whether the Freedom of Information Act (FOIA) requires disclosure of the record; 5) a Member of Congress submitting a request involving an individual to whom the record pertains, when the individual has requested the Member's assistance with respect to the subject matter of the record; 6) a court, magistrate, or administrative tribunal, in the course of presenting evidence, including disclosures to opposing counsel in the course of settlement negotiations; 7) the Administrator, General Services Administration (GSA), or their designee, during an inspection of records conducted by GSA under authority of 44 U.S.C. 2904 and 2906, in accordance with the GSA regulations and any other relevant (i.e., GSA or Commerce) directive, where such disclosure shall not be used to make determinations about individuals; 8) another federal agency for purposes of National Security review (35 U.S.C. 181) and for review pursuant to the Atomic Energy Act (42 U.S.C. 218(c)); 9) the Office of Personnel Management (OPM) for personnel research purposes; and 9) the Office of Management and Budget (OMB) for legislative coordination and clearance.

If you do not furnish the information requested on this form, the USPTO may not be able to process and/or examine your submission, which may result in termination of proceedings, abandonment of the application, and/or expiration of the patent.

Additional Uses

Additional USPTO uses of the information in this record may include disclosure to: 1) the International Bureau of the World Intellectual Property Organization, if the record is related to an international application filed under the Patent Cooperation Treaty; 2) the public i) after publication of the application pursuant to 35 U.S.C. 122(b), ii) after issuance of a patent pursuant to 35 U.S.C. 151, iii) if the record was filed in an application which became abandoned or in which the proceedings were terminated and which application is referenced by either a published application, an application open to public inspections, or an issued patent, or iv) without publication of the application or patent under the specific circumstances provided for by 37 CFR 1.14(a)(1)(v)-(vii); and/or 3) the National Archives and Records Administration, for inspection of records.

UNITED STATES
PATENT AND TRADEMARK OFFICE

P.O. Box 1450
Alexandria, VA 22313 - 1450
www.uspto.gov

ELECTRONIC ACKNOWLEDGEMENT RECEIPT

APPLICATION #	RECEIPT DATE / TIME	ATTORNEY DOCKET #
17/870,268	**08/12/2024 11:50:01 AM Z ET**	**SKYW00056-1C US**

Title of Invention

FRONT CONTACT SOLAR CELL WITH FORMED EMITTER

Application Information

APPLICATION TYPE	Utility - Nonprovisional Application under 35 USC 111(a)	PATENT #	-
CONFIRMATION #	1086	FILED BY	Julie Fosnaugh
PATENT CENTER #	66727254	FILING DATE	07/21/2022
CUSTOMER #	188295	FIRST NAMED INVENTOR	Peter John COUSINS
CORRESPONDENCE ADDRESS	-	AUTHORIZED BY	Jackson Ho

Documents

TOTAL DOCUMENTS: 1

DOCUMENT	PAGES	DESCRIPTION	SIZE (KB)
S0123US4_SKYW00056-1C US_sb0021_08122024.pdf	2	Transmittal Letter	271 KB

Digest

DOCUMENT	MESSAGE DIGEST(SHA-512)
S0123US4_SKYW00056-1C US_sb0021_08122024.pdf	77BC5A824DBE71BCCDD2E43F2923DB0ABB68529E190040DBBFA18450208BFF45C24C644F35ADA64F72466809401CAB63F04AB9CE755DD0BB0806800D579E4DB8

This Acknowledgement Receipt evidences receipt on the noted date by the USPTO of the indicated documents, characterized by the applicant, and including page counts, where applicable. It serves as evidence of receipt similar to a Post Card, as described in MPEP 503.

New Applications Under 35 U.S.C. 111

If a new application is being filed and the application includes the necessary components for filing date (see 37 CFR 1.53(b)-(d) and MPEP 506), a Filing Receipt (37 CFR 1.54) will be issued in due course and the date shown on this Acknowledgement Receipt will establish the filing date of the application

National Stage of an International Application under 35 U.S.C. 371

If a timely submission to enter the national stage of an international application is compliant with the conditions of 35 U.S.C. 371 and other applicable requirements a Form PCT/DO/EO/903 indicating acceptance of the application as a national stage submission under 35 U.S.C. 371 will be issued in addition to the Filing Receipt, in due course.

New International Application Filed with the USPTO as a Receiving Office

If a new international application is being filed and the international application includes the necessary components for an international filing date (see PCT Article 11 and MPEP 1810), a Notification of the International Application Number and of the International Filing Date (Form PCT/RO/105) will be issued in due course, subject to prescriptions concerning national security, and the date shown on this Acknowledgement Receipt will establish the international filing date of the application.

UNITED STATES
PATENT AND TRADEMARK OFFICE

P.O. Box 1450
Alexandria, VA 22313 - 1450
www.uspto.gov

ELECTRONIC PAYMENT RECEIPT

APPLICATION #	RECEIPT DATE / TIME	ATTORNEY DOCKET #
17/870,268	**08/12/2024 11:50:01 AM Z ET**	**SKYW00056-1C US**

Title of Invention

FRONT CONTACT SOLAR CELL WITH FORMED EMITTER

Application Information

APPLICATION TYPE	Utility - Nonprovisional Application under 35 USC 111(a)	PATENT #	-
CONFIRMATION #	1086	FILED BY	Julie Fosnaugh
PATENT CENTER #	66727254	AUTHORIZED BY	Jackson Ho
CUSTOMER #	188295	FILING DATE	07/21/2022
CORRESPONDENCE ADDRESS	-	FIRST NAMED INVENTOR	Peter John COUSINS

Payment Information

PAYMENT METHOD	PAYMENT TRANSACTION ID	PAYMENT AUTHORIZED BY
CARD / 2008	**E20248BB52257304**	**Julie Fosnaugh**

PRE-AUTHORIZED ACCOUNT	PRE-AUTHORIZED CATEGORY
603846	**37 CFR 1.21 (Miscellaneous fees and charges)**

FEE CODE	DESCRIPTION	ITEM PRICE($)	QUANTITY	ITEM TOTAL($)
1253	EXTENSION FOR RESPONSE WITHIN THIRD MONTH	1480.00	1	1480.00
			TOTAL AMOUNT:	**$1,480.00**

This Acknowledgement Receipt evidences receipt on the noted date by the USPTO of the indicated documents, characterized by the applicant, and including page counts, where applicable. It serves as evidence of receipt similar to a Post Card, as described in MPEP 503.

New Applications Under 35 U.S.C. 111

If a new application is being filed and the application includes the necessary components for filing date (see 37 CFR 1.53(b)-(d) and MPEP 506), a Filing Receipt (37 CFR 1.54) will be issued in due course and the date shown on this Acknowledgement Receipt will establish the filing date of the application

National Stage of an International Application under 35 U.S.C. 371

If a timely submission to enter the national stage of an international application is compliant with the conditions of 35 U.S.C. 371 and other applicable requirements a Form PCT/DO/EO/903 indicating acceptance of the application as a national stage submission under 35 U.S.C. 371 will be issued in addition to the Filing Receipt, in due course.

New International Application Filed with the USPTO as a Receiving Office

If a new international application is being filed and the international application includes the necessary components for an international filing date (see PCT Article 11 and MPEP 1810), a Notification of the International Application Number and of the International Filing Date (Form PCT/RO/105) will be issued in due course, subject to prescriptions concerning national security, and the date shown on this Acknowledgement Receipt will establish the international filing date of the application.

PTO/SB/06 (09-11)
Approved for use through 1/31/2014. OMB 0651-0032
U.S. Patent and Trademark Office; U.S. DEPARTMENT OF COMMERCE
Under the Paperwork Reduction Act of 1995, no persons are required to respond to a collection of information unless it displays a valid OMB control number.

PATENT APPLICATION FEE DETERMINATION RECORD Substitute for Form PTO-875	Application or Docket Number 17/870,268	Filing Date 07/21/2022	☐ To be Mailed

ENTITY: ☑ LARGE ☐ SMALL ☐ MICRO

APPLICATION AS FILED - PART I

FOR	(Column 1) NUMBER FILED	(Column 2) NUMBER EXTRA		RATE ($)	FEE ($)
☐ BASIC FEE (37 CFR 1.16(a), (b), or (c))	N/A	N/A		N/A	
☐ SEARCH FEE (37 CFR 1.16(k), (i), or (m))	N/A	N/A		N/A	
☐ EXAMINATION FEE (37 CFR 1.16(o), (p), or (q))	N/A	N/A		N/A	
TOTAL CLAIMS (37 CFR 1.16(i))	minus 20 =	*		x $100 =	
INDEPENDENT CLAIMS (37 CFR 1.16(h))	minus 3 =	*		x $480 =	
☐ APPLICATION SIZE FEE (37 CFR 1.16(s))	If the specification and drawings exceed 100 sheets of paper, the application size fee due is $310 ($155 for small entity) for each additional 50 sheets or fraction thereof. See 35 U.S.C. 41(a)(1)(G) and 37 CFR 1.16(s).				
☐ MULTIPLE DEPENDENT CLAIM PRESENT (37 CFR 1.16(j))					
* If the difference in column 1 is less than zero, enter "0" in column 2.				TOTAL	

APPLICATION AS AMENDED - PART II

AMENDMENT	08/20/2024	(Column 1) CLAIMS REMAINING AFTER AMENDMENT		(Column 2) HIGHEST NUMBER PREVIOUSLY PAID FOR	(Column 3) PRESENT EXTRA		RATE ($)	ADDITIONAL FEE ($)
	Total (37 CFR 1.16(i))	* 20	Minus	** 20	= 0		x $100 =	0
	Independent (37 CFR 1.16(h))	* 1	Minus	*** 3	= 0		x $480 =	0
	☐ Application Size Fee (37 CFR 1.16(s))							
	☐ FIRST PRESENTATION OF MULTIPLE DEPENDENT CLAIM (37 CFR 1.16(j))							
							TOTAL ADD'L FEE	0

AMENDMENT		(Column 1) CLAIMS REMAINING AFTER AMENDMENT		(Column 2) HIGHEST NUMBER PREVIOUSLY PAID FOR	(Column 3) PRESENT EXTRA		RATE ($)	ADDITIONAL FEE ($)
	Total (37 CFR 1.16(i))	*	Minus	**	=		x $0 =	
	Independent (37 CFR 1.16(h))	*	Minus	***	=		x $0 =	
	☐ Application Size Fee (37 CFR 1.16(s))							
	☐ FIRST PRESENTATION OF MULTIPLE DEPENDENT CLAIM (37 CFR 1.16(j))							
							TOTAL ADD'L FEE	

* If the entry in column 1 is less than the entry in column 2, write "0" in column 3.	LIE
** If the "Highest Number Previously Paid For" IN THIS SPACE is less than 20, enter "20".	/DIANE FLOYD/
*** If the "Highest Number Previously Paid For" IN THIS SPACE is less than 3, enter "3".	
The "Highest Number Previously Paid For" (Total or Independent) is the highest number found in the appropriate box in column 1.	

This collection of information is required by 37 CFR 1.16. The information is required to obtain or retain a benefit by the public which is to file (and by the USPTO to process) an application. Confidentiality is governed by 35 U.S.C. 122 and 37 CFR 1.14. This collection is estimated to take 12 minutes to complete, including gathering, preparing, and submitting the completed application form to the USPTO. Time will vary depending upon the individual case. Any comments on the amount of time you require to complete this form and/or suggestions for reducing this burden, should be sent to the Chief Information Officer, U.S. Patent and Trademark Office, U.S. Department of Commerce, P.O. Box 1450, Alexandria, VA 22313-1450. DO NOT SEND FEES OR COMPLETED FORMS TO THIS ADDRESS. **SEND TO: Commissioner for Patents, P.O. Box 1450, Alexandria, VA 22313-1450.**

If you need assistance in completing the form, call 1-800-PTO-9199 and select option 2.

UNITED STATES
PATENT AND TRADEMARK OFFICE

P.O. Box 1450
Alexandria, VA 22313 - 1450
www.uspto.gov

ELECTRONIC ACKNOWLEDGEMENT RECEIPT

APPLICATION #	RECEIPT DATE / TIME	ATTORNEY DOCKET #
17/870,268	**08/20/2024 07:23:18 PM Z ET**	**SKYW00056-1C US**

Title of Invention

FRONT CONTACT SOLAR CELL WITH FORMED EMITTER

Application Information

APPLICATION TYPE	Utility - Nonprovisional Application under 35 USC 111(a)	PATENT #	-
CONFIRMATION #	1086	FILED BY	Julie Fosnaugh
PATENT CENTER #	66861242	FILING DATE	07/21/2022
CUSTOMER #	188295	FIRST NAMED INVENTOR	Peter John COUSINS
CORRESPONDENCE ADDRESS	-	AUTHORIZED BY	Jackson Ho

Documents

TOTAL DOCUMENTS: 3

DOCUMENT		PAGES	DESCRIPTION	SIZE (KB)
S0123US4_SKYW00056-1C US - RESP_OA_08202024.pdf		7	-	104 KB
S0123US4_SKYW00056-1C US - RESP_OA_08202024-A....pdf	(1-1)	1	Amendment/Request for Reconsideration-After Non-Final Rejection	70 KB
S0123US4_SKYW00056-1C US - RESP_OA_08202024-CLM.pdf	(2-4)	3	Claims	73 KB
S0123US4_SKYW00056-1C US - RESP_OA_08202024-	(5-7)	3	Applicant Arguments/Remarks Made in an Amendment	94 KB

REM.pdf

Digest

DOCUMENT	MESSAGE DIGEST(SHA-512)
S0123US4_SKYW00056-1C US - RESP_OA_08202024.pdf	C8A9F67B728FD75078BCA93A1C89F51ACB104FEDD8EA72D74A66086CB88A680E385F571A07C1E19402931B75B31B240DCFCEED25451AF6A3F417C825407F7419
S0123US4_SKYW00056-1C US - RESP_OA_08202024-A....pdf	EEF6D0FDB0F4638B31DA781B012E8600D053424D7FBACA661AD5A98C040596A42830D2B18AF8662DCEDF3DFD6C25F43C55C5394FB08DB72A5A68B9EAC4C87528
S0123US4_SKYW00056-1C US - RESP_OA_08202024-CLM.pdf	AB6704F48D33085E72AAEEAFB902E3A890441DE3ABD023CF6EB4790A3E460AC96EE65AD25CD5653059EC8D25E82FF21B3AE8BB481A5FED7C0F12921E58B0334F
S0123US4_SKYW00056-1C US - RESP_OA_08202024-REM.pdf	4E800C75DCCD6CEAA611FAF22785C790A23DB8D354FD17A0A4AED3B1BE00E76251DAA6E99C445BC4BDB4FF3FC2A698252DE8374B50FFCDFDA3877DE7C60EBE90

This Acknowledgement Receipt evidences receipt on the noted date by the USPTO of the indicated documents, characterized by the applicant, and including page counts, where applicable. It serves as evidence of receipt similar to a Post Card, as described in MPEP 503.

New Applications Under 35 U.S.C. 111

If a new application is being filed and the application includes the necessary components for filing date (see 37 CFR 1.53(b)-(d) and MPEP 506), a Filing Receipt (37 CFR 1.54) will be issued in due course and the date shown on this Acknowledgement Receipt will establish the filing date of the application

National Stage of an International Application under 35 U.S.C. 371

If a timely submission to enter the national stage of an international application is compliant with the conditions of 35 U.S.C. 371 and other applicable requirements a Form PCT/DO/EO/903 indicating acceptance of the application as a national stage submission under 35 U.S.C. 371 will be issued in addition to the Filing Receipt, in due course.

New International Application Filed with the USPTO as a Receiving Office

If a new international application is being filed and the international application includes the necessary components for an international filing date (see PCT Article 11 and MPEP 1810), a Notification of the International Application Number and of the International Filing Date (Form PCT/RO/105) will be issued in due course, subject to prescriptions concerning national security, and the date shown on this Acknowledgement Receipt will establish the international filing date of the application.

IN THE UNITED STATES PATENT AND TRADEMARK OFFICE

Applicant: MAXEON SOLAR PTE. LTD

First Named Inventor: Peter John Cousins

Title: FRONT CONTACT SOLAR CELL WITH FORMED EMITTER

Application No.:	17/870,268	Filing Date:	07/21/2022
Examiner:	Devina Pillay	Art Unit:	1726
Docket No.:	SKYW00056-1C US	Confirmation No.:	1086

Filed via Patent Center
Commissioner for Patents
P.O. Box 1450
Alexandria, VA 22313-1450

AMENDMENT AND RESPONSE TO OFFICE ACTION

Sir:

This responds to the Office Action dated February 20, 2024. The three month extension fee under 37 CFR 1.17(a)(3) was submitted in the above application on 08/12/2024.

Amendments to the claims begin on page 2.

Remarks begin on page 5.

AMENDMENTS TO THE CLAIMS

This listing of claims will replace all prior versions and listings of claims in the application:

1-20. (Canceled)

21. (Currently amended) A solar cell comprising:

a silicon substrate having a textured front surface and a back surface opposite the front surface, the front surface facing the sun to collect solar radiation during normal operation;

an antireflective layer over the textured front surface of the silicon substrate;

a doped diffusion region in the silicon substrate, the doped diffusion region proximate to the textured front surface of the silicon substrate, wherein the antireflective layer is formed over at least a portion of the doped diffusion region;

a tunnel oxide layer formed on the back surface of the silicon substrate, the tunnel oxide layer having a thickness of about 10 to 50 Angstroms;

a doped polysilicon ~~emitter~~ region layer formed on the tunnel oxide layer, the doped polysilicon ~~emitter~~ region layer and the doped diffusion region having opposite conductivity types;

a front metal contact disposed on and in electrical contact with a portion of the doped diffusion region ~~the front surface of the silicon substrate~~; and

a rear metal contact disposed on and in contact with the doped polysilicon ~~emitter~~ region layer.

22. (Previously presented) The solar cell of claim 21, wherein the antireflective layer comprises silicon nitride.

23. (Previously presented) The solar cell of claim 21 comprising an oxide layer formed on the textured front surface of the silicon substrate.

24. (Previously presented) The solar cell of claim 23, wherein the oxide layer comprises silicon dioxide.

25. (Previously presented) The solar cell of claim 24, wherein the silicon dioxide is thermally grown to a thickness of about 10 to 250 Angstroms.

26. (Previously presented) The solar cell of claim 21, wherein the tunnel oxide layer comprises silicon dioxide.

27. (Previously presented) The solar cell of claim 26, wherein the tunnel oxide layer is thermally grown.

28. (Currently amended) The solar cell of claim 21 comprising a dielectric layer formed on the doped polysilicon ~~emitter~~ region layer.

29. (Currently amended) The solar cell of claim 28 wherein the dielectric layer comprises contact holes through which rear metal contact makes an electrical connection with the doped polysilicon ~~emitter~~ region layer.

30. (Previously presented) The solar cell of claim 21, wherein rear metal contact comprises silver.

31-33. (Canceled)

34. (Previously presented) The solar cell of claim 21, wherein the silicon substrate is a N-type silicon substrate.

35. (New) The solar cell of claim 21, comprising a trench formed on the back surface of the solar cell, wherein the trench is formed through the doped polysilicon region layer and the tunnel oxide layer.

36. (New) The solar cell of claim 35, wherein the trench is formed through a portion of the silicon substrate.

37. (New) The solar cell of claim 35, wherein the trench separates portions of the doped polysilicon ~~emitter~~ region on the back surface of the solar cell.

38. (New) The solar cell of claim 35, wherein the trench is formed near an edge of the silicon substrate on the back surface.

39. (New) The solar cell of claim 21, wherein:

the doped diffusion region in the silicon substrate includes a first doped diffusion region and a second doped diffusion region,

the first doped diffusion region is located under and in contact with the front metal contact, and

the first doped diffusion region has a lower sheet resistance than the second doped diffusion region.

40. (New) The solar cell of claim 39, wherein the first doped diffusion region is formed from a different dopant source than the second doped diffusion region.

41. (New) The solar cell of claim 39, wherein the front metal contact is narrower than the first doped diffusion region.

42. (New) The solar cell of claim 41, wherein the antireflective layer is formed over the second doped diffusion region and a portion of the first doped diffusion region, whereby the antireflective layer has contact holes through which the front metal contact contacts the first doped diffusion region.

43. (New) The solar cell of claim 39, wherein the first doped diffusion region has a circular shape from a plan view of the front surface.

REMARKS

In the Office Action dated February 20, 2024, claims 21-34 were rejected. With this response, claim 21 has been amended for clarity, claims 31-33 are canceled without prejudice or disclaimer, and claims 35-43 are newly added. Support for the amendments to the claims is found in the originally filed drawings, including Figs. 1-2 and 4G and the corresponding portions of the specification. The Examiner is encouraged to contact the undersigned to discuss the amendments and any questions regarding the support.

No new matter has been added.

Claim Rejections – 35 USC 103

Claims 21, 22, 26, 27, 30, 33 and 34 are rejected under 35 USC 103 as being unpatentable over U.S. patent no. 6,262,359 to Meier, (hereinafter referred to as, "Meier") in view of U.S. publication no. 2005/0268963 to Jordan, (hereinafter referred to as, "Jordan") in view of JP07-106611 to Okayasu, (hereinafter referred to as, "Okayasu") in view of WO 2009/094578 A2 to Borden, (hereinafter referred to as, "Borden"). Claims 23-25 and 28-29 are rejected as being unpatentable over Meier, in view of Jordan, Okayasu and Borden as applied to claims 21, 22, 26, 27, 30, 33 and 34 above and in further view of, "Surface passivation of silicon solar cells using plasma-enhanced chemical-vapour deposited SiN films and thin thermal Sio_2/plasma SiN stack", to Schmidt, (hereinafter referred to as, "Schmidt"). Claims 31 and 32 are rejected under 35 USC as being unpatentable over Meier, in view of Jordan, Okayasu and Borden as applied to claims 21, 22, 26, 27, 30, 33 and 34 above and in further view of U.S. publication no. 2008/0121266 to Tsunomura, (hereinafter referred to as, "Tsunomura").

Applicant respectfully submits that the combination of Meier, Jordan, Okayasu, and Borden would result, presuming such a combination were proper, would result in a solar cell having a polysilicon region located at the front surface. On the other hand, claim 21 recites a diffusion region in the silicon substrate proximate the front surface and a polysilicon region at the back surface. Claim 21 is clarified herein to emphasize this distinction by clarifying the structural arrangement of the doped diffusion region, the antireflective layer, and the front metal contact – there's no separate polysilicon region at the front surface.

Applicant further submits that Jordan, Schmidt, and Tsunomura do not cure this deficiency. Therefore, applicant submits that claims 21-30 and 35-43 are patentable under 35

USC 103 over Meier in view of Okayasu and Borden and in further view of Jordan, Schmidt, and/or Tsunomura.

Double Patenting Rejection

Claims 21-34 were rejected on the ground of nonstatutory double patenting rejection as being unpatentable over claims 1-12 of U.S. patent no. 8,222,516 in view of Meier, Borden, Schmidt and Tsunomura. Applicant submits that this double patenting rejection may be moot in view of the claim amendments.

Conclusion

The Commissioner is hereby authorized to charge any additional fee(s), charge any underpayment of fee(s), or credit any overpayment associated with this communication to Deposit Account No. 60-3846.

Respectfully submitted,

/Jackson Ho/
Jackson Ho, Reg. No. 72,360
Attorney for Applicant

Schmidt Patent Law, Inc.
2635 N. First Street, Suite 150
San Jose, CA 95134-2000
Telephone: +1.408.331.1671
E-mail: jho@spatentlaw.com

Certificate of Patent Center Transmission: I hereby certify that this correspondence is being transmitted electronically via the U.S. Patent and Trademark Office (USPTO) Patent Center filing system to the USPTO on: August 20, 2024.

/Jackson Ho/
Jackson Ho, Reg. No. 72,360

UNITED STATES PATENT AND TRADEMARK OFFICE

UNITED STATES DEPARTMENT OF COMMERCE
United States Patent and Trademark Office
Address: COMMISSIONER FOR PATENTS
P.O. Box 1450
Alexandria, Virginia 22313-1450
www.uspto.gov

APPLICATION NO.	FILING DATE	FIRST NAMED INVENTOR	ATTORNEY DOCKET NO.	CONFIRMATION NO.
17/870,268	07/21/2022	Peter John COUSINS	SKYW00056-1C US	1086

188295 7590 09/16/2024
Schmidt Patent Law, Inc.
2635 N. First Street
Suite 150
San Jose, CA 95134-2000

EXAMINER
PILLAY, DEVINA

ART UNIT	PAPER NUMBER
1726	

NOTIFICATION DATE	DELIVERY MODE
09/16/2024	ELECTRONIC

Please find below and/or attached an Office communication concerning this application or proceeding.

The time period for reply, if any, is set in the attached communication.

Notice of the Office communication was sent electronically on above-indicated "Notification Date" to the following e-mail address(es):

docketing@spatentlaw.com

Office Action Summary	Application No. 17/870,268	Applicant(s) COUSINS, Peter John	
	Examiner DEVINA PILLAY	Art Unit 1726	AIA (FITF) Status No

-- The MAILING DATE of this communication appears on the cover sheet with the correspondence address --

Period for Reply

A SHORTENED STATUTORY PERIOD FOR REPLY IS SET TO EXPIRE 3 MONTHS FROM THE MAILING DATE OF THIS COMMUNICATION.

- Extensions of time may be available under the provisions of 37 CFR 1.136(a). In no event, however, may a reply be timely filed after SIX (6) MONTHS from the mailing date of this communication.
- If NO period for reply is specified above, the maximum statutory period will apply and will expire SIX (6) MONTHS from the mailing date of this communication.
- Failure to reply within the set or extended period for reply will, by statute, cause the application to become ABANDONED (35 U.S.C. § 133). Any reply received by the Office later than three months after the mailing date of this communication, even if timely filed, may reduce any earned patent term adjustment. See 37 CFR 1.704(b).

Status

1)☐ Responsive to communication(s) filed on _____.

☐ A declaration(s)/affidavit(s) under **37 CFR 1.130(b)** was/were filed on _____.

2a)☑ This action is **FINAL.** 2b) ☐ This action is non-final.

3)☐ An election was made by the applicant in response to a restriction requirement set forth during the interview on _____; the restriction requirement and election have been incorporated into this action.

4)☐ Since this application is in condition for allowance except for formal matters, prosecution as to the merits is closed in accordance with the practice under *Ex parte Quayle*, 1935 C.D. 11, 453 O.G. 213.

Disposition of Claims*

5) ☑ Claim(s) 21-30 and 34-43 is/are pending in the application.

5a) Of the above claim(s) _____ is/are withdrawn from consideration.

6) ☐ Claim(s) _____ is/are allowed.

7) ☑ Claim(s) 21-30 and 34-43 is/are rejected.

8) ☐ Claim(s) _____ is/are objected to.

9) ☐ Claim(s) _____ are subject to restriction and/or election requirement

* If any claims have been determined allowable, you may be eligible to benefit from the **Patent Prosecution Highway** program at a participating intellectual property office for the corresponding application. For more information, please see http://www.uspto.gov/patents/init_events/pph/index.jsp or send an inquiry to **PPHfeedback@uspto.gov.**

Application Papers

10)☐ The specification is objected to by the Examiner.

11)☐ The drawing(s) filed on _____ is/are: a)☐ accepted or b)☐ objected to by the Examiner.

Applicant may not request that any objection to the drawing(s) be held in abeyance. See 37 CFR 1.85(a).

Replacement drawing sheet(s) including the correction is required if the drawing(s) is objected to. See 37 CFR 1.121(d).

Priority under 35 U.S.C. § 119

12)☐ Acknowledgment is made of a claim for foreign priority under 35 U.S.C. § 119(a)-(d) or (f).

Certified copies:

a)☐ All b)☐ Some** c)☐ None of the:

1.☐ Certified copies of the priority documents have been received.

2.☐ Certified copies of the priority documents have been received in Application No. _____.

3.☐ Copies of the certified copies of the priority documents have been received in this National Stage application from the International Bureau (PCT Rule 17.2(a)).

** See the attached detailed Office action for a list of the certified copies not received.

Attachment(s)

1) ☑ Notice of References Cited (PTO-892)

2) ☐ Information Disclosure Statement(s) (PTO/SB/08a and/or PTO/SB/08b) Paper No(s)/Mail Date _____.

3) ☐ Interview Summary (PTO-413) Paper No(s)/Mail Date _____.

4) ☐ Other: _____.

DETAILED ACTION

Notice of Pre-AIA or AIA Status

The present application is being examined under the pre-AIA first to invent provisions.

Claim Rejections - 35 USC § 103

The text of those sections of Title 35, U.S. Code not included in this action can be found in a prior Office action.

Claims 21, 22, 26, 27, 30, and 34 is/are rejected under pre-AIA 35 U.S.C. 103(a) as being unpatentable over Meier (US 6,262,359) in view of Jordan (US 2005/0268963 A1) in view of Okayasu (JP07-106611, Human Translation) in view of Borden (WO 2009/094578 A2).

Regarding claim 21, 22, 26, 27, and 34, Meier discloses a solar cell comprising (see Fig. 3D, C5/L38-C6/L55):

a n-type silicon substrate (218 n-type, C5/L30-42) having a front surface that faces the sun to collect solar radiation during normal operation and a back surface opposite the front surface;

an anti-reflection (214, silicon nitride, C6/L20-25) over the front surface of the solar cell;

a n-type doped diffusion region in the front surface (216 high doped concentration area n+) of the substrate;

wherein the antireflection layer (214) is formed over at least a portion of the doped diffusion region (216) (See Fig. 3D);

a p-type doped region layer (220 emitter of p-type) forming a backside junction with the substrate; and the p-type doped region layer (220 is p-type) having an opposite dopant type to the n-type doped diffusion region (216 is n-type);

a front metal electrode (212, C7/L25-30) disposed on and in electrical contact with a portion of the n-type doped diffusion region (216);

a back metal electrode (222, C6/L25-30) disposed on and in electrical contact with the p-type doped region layer (220).

However, Meier does not disclose that there is a textured surface on the N-type silicon substrate on the front side of the solar cell.

Jordan discloses that the front surface of the solar cell is textured ([0022]). In addition, Jordan discloses that texturizing the front surface increases light absorption ([0022]).

It would have been obvious to one of ordinary skill in the art at the time of the invention to modify the front surface of Meier by texturizing the front surface as disclosed by Jordan because it increases light adsorption.

However, Meier does not disclose that the emitter is a polysilicon emitter and that there is a tunnel oxide formed between the emitter and the back surface of the substrate.

Okayasu discloses that instead of forming an emitter from a portion of a substrate which is doped, an emitter can be formed using a doped polysilicon layer ([0005] [0009], Abstract) and by forming an emitter this way the thickness can be more accurately controlled and it prevents generation of floating foreign matter ([0008] [0009]).

It would have been obvious to one of ordinary skill in the art at the time of the invention to replace the method of forming the p-type doped region layer (emitter) from a portion of a substrate of Meier and instead form the p-type doped region layer (emitter) by using a doped polysilicon layer as disclosed by Okayasu because the thickness can be more accurately controlled and it prevent generation of floating foreign matter.

However, modified Meier does not disclose a tunneling dielectric oxide between the emitter/front surface field and the substrate.

Borden discloses that tunnel oxides can be used in solar cells between doped polysilicon layers and monocrystalline substrates [0016].

Borden discloses that the tunnel oxide is SiO_2 which can be formed by a rapid thermal oxidation process ([0018], see Fig. 2A), and is around 12 Å.

Furthermore, Borden discloses that by providing the tunneling layer it prevents epitaxial growth of the emitter layer and further it protects the surface from plasma damage of the deposited emitter layer [0020].

It would have been obvious to one of ordinary skill in the art at the time of the invention to modify the interface between the p-type doped region layer (doped polycrystalline emitter layer) and monocrystalline substrate of modified Meier by having a tunneling oxide, SiO_2 of around 12 Å, at the interface as disclosed by Borden because it prevents epitaxial growth of the emitter layer and further it protects the crystalline surface from plasma damage of the deposited emitter layer.

<u>Regarding claim 30,</u> modified Meier discloses all of the claim limitations as set forth above.

Meier discloses that the front contact can be silver (212, C7/L10-15).

However, Meier does not disclose that the electrode that is in contact with the p-type polysilicon layer on the rear is silver.

Okayasu discloses that the back electrode on the polysilicon emitter is formed of a silver electrode [0044].

It would have been obvious to one of ordinary skill in the art at the time of the invention to replace the aluminum electrode of Meier with the silver electrode of Okayasu because one of ordinary skill in the art would have been able to carry out such a substitution, and the results would be reasonably predictable.

Claims 23-25 and 28-29 is/are rejected under pre-AIA 35 U.S.C. 103(a) as being unpatentable over Meier (US 6,262,359) in view of Jordan (US 2005/0268963 A1) in view of Okayasu (JP07-106611, Human Translation) in view of Borden (WO 2009/094578 A2) as applied to claims 21, 22, 26, 27, 30, and 34 above and in further view of Schmidt (Surface passivation of silicon solar cells using plasma-enhanced chemical-vapour-deposited SiN films and thin thermal SiO_2/plasma SiN stacks).

<u>Regarding claims 23-25,</u> modified Meier discloses all of the claim limitations as set forth above.

Meier discloses a SiN layer can be optionally grown on the front surface (see layer 214, C6/L20-25).

However, Meier does not disclose a silicon dioxide layer that is thermally grown having a thickness between 10-250 Å.

Schmidt discloses a silicon dioxide layer that is thermally grown (see section 2.3, 900°C) with thickness between approximately 50-300 Å under a silicon nitride layer on a doped silicon layer (see solar cell 4 or 5 in Table 1) on the front surface or the back surface.

It would have been obvious to one of ordinary skill in the art at the time of the invention to modify the silicon nitride layer on the front surface of Meier by replacing it with silicon oxide and silicon nitride stack as disclosed by Schmidt because it can improve solar cell and performance and/or because it is an equivalent structure for replacing a silicon nitride structure on the front surface of a doped silicon surface because Schmidt discloses it is an equivalent structure.

It would have been obvious to one of ordinary skill in the art at the time of invention to have selected the overlapping portion of the ranges disclosed by the reference because selection of overlapping portion of ranges has been held to be a prima facie case of obviousness. *In re Malagari*, 182 USPQ 549.

Regarding claims 28 and 29, modified Meier discloses all of the claim limitations as set forth above.

However, modified Meier does not disclose a passivation layer on the doped polysilicon emitter.

Schmidt discloses a silicon dioxide layer that is thermally grown (see section 2.3, 900°C) with thickness between approximately 50-300 Å under a silicon nitride layer on a doped silicon layer (see solar cell 4 or 5 in Table 1) on an emitter and further discloses that if this structure is constructed on the back surface rear surface contacts can pierce through the SiO_2/SiN layer stack to contact the emitter.

It would have been obvious to one of ordinary skill in the art at the time of the invention to modify the back surface of the polysilicon emitter Meier by passivating it with a silicon oxide and silicon nitride stack as disclosed by Schmidt because it can improve solar cell and performance and furthermore it would have been appropriate to provide openings in these layers so that the rear metal contacts can pierce through them as disclosed by Schmidt because it will allow for the rear contact to contact the doped silicon layer.

Claims 35-38 is/are rejected under pre-AIA 35 U.S.C. 103(a) as being unpatentable over Meier (US 6,262,359) in view of Jordan (US 2005/0268963 A1) in view of Okayasu (JP07-106611, Human Translation) in view of Borden (WO 2009/094578 A2) as applied to claims 21, 22, 26, 17, 30, and 34 above and Russell (US 2008/0216893 A1) and in view of Kray (Study on the edge isolation of industrial silicon solar cells with waterjet-guided laser).

Regarding claims 35-38, modified Meier discloses all of the claim limitations as set forth above.

However, modified Meier does not disclose wherein a trench is formed near an edge on the back surface of the solar cell, and the trench is formed through the silicon substrate, doped p-type polysilicon region layer (emitter) and the tunnel oxide layer and the trench separates portions of the p-type polysilicon region layer (emitter).

Russell discloses that edge isolations can be performed at different positions on the solar cell including back sides and serve to electrically isolate the front and rear solar cells from each other ([0042]).

Kray discloses an edge isolation process which includes cutting through the doped emitter layer and into and through part of the substrate (See Fig. 1).

It would have been obvious to one of ordinary skill in the art at the time of the invention to modify the solar cell of modified Meier by having the edge be isolated by cutting through the rear passivation layer, rear emitter layer and part of the substrate as disclosed by Russell and Kray because it will prevent a shunt between edge surfaces.

Th trench of modified Meier will also include a portion of the tunnel oxide being removed since the trench goes from the p-type polysilicon region layer through and into the substrate and the tunnel oxide lies between these two layers.

Claims 39, 40, and 43 is/are rejected under pre-AIA 35 U.S.C. 103(a) as being unpatentable over Meier (US 6,262,359) in view of Jordan (US 2005/0268963 A1) in view of Okayasu (JP07-106611, Human Translation) in view of Borden (WO 2009/094578 A2) as applied to claims 21, 22, 26, 17, 30, and 34 above and in view of Wenham (6,429,037 B1) and in view of Xi (US 4,865,999).

Regarding claims 39 and 43, modified Meier discloses all of the claim limitations as set forth above.

However, modified Meier does not disclose the doped diffusion region in the silicon substrate includes a first doped diffusion region and a second doped diffusion region, the first doped diffusion region is located under and in contact with the front metal contact, and the first doped diffusion region has a lower sheet resistance than the second doped diffusion region, and wherein the first doped diffusion region has a circular shape from a plan view of the front surface.

Wenham discloses a solar cell wherein the area beneath point contacts includes areas of high doping which is important for reducing contact resistance (see Fig. 5, portions 18 and 23) (C1/L25-41).

It would have been obvious to one of ordinary skill in the art at the time of the invention to modify the front surface field formed in the substrate of modified Meier by adding in highly doped regions under the metallic contacts as disclosed by Wenham because doing so reduces the contact resistance and will improve the efficiency of the solar cell.

Modified Meier does not disclose that the point contacts are dot shaped.

Xi discloses that either point contacts or electrical contact dots can be used as electrical contacts for solar cells (C3/L40-45).

It would have been obvious to one of ordinary skill in the art at the time of the invention to modify the shape of the point contacts to have dot contact shape because as disclosed by Xi having a dot like point contact shape is known and one of ordinary skill in the art would have been able to carry out such a substitution, and the results would be reasonably predictable.

Note that the cross-sectional shape of the point contact of modified Meier will have the corresponding the plurality of dot-shaped doped regions having a dot shape as seen from a plan view of the solar cell.

<u>Regarding claim 40</u>, modified Meier discloses all of the claim limitations as set forth above.

With regards to “wherein the first doped diffusion region is formed from a different dopant source than the second doped diffusion region”, the cited prior art teaches all of

the positively recited structure of the claimed apparatus or product. The determination of patentability is based upon the apparatus structure itself. The patentability of a product or apparatus does not depend on its method of production or formation. If the product in the product-by-process claim is the same as or obvious from a product of the prior art, the claim is unpatentable even though the prior product was made by a different process. See *In re Thorpe*, 777 F.2d 695, 698, 227 USPQ 964, 966 (Fed. Cir. 1985) (see MPEP § 2113).

Furthermore, different dopants will diffuse from layer 12 into layer 13 than the dopants which diffuse from layer 12 into region 18 and these are different sources.

Claims 39, 40, 41 and 42 is/are rejected under pre-AIA 35 U.S.C. 103(a) as being unpatentable over Meier (US 6,262,359) in view of Jordan (US 2005/0268963 A1) in view of Okayasu (JP07-106611, Human Translation) in view of Borden (WO 2009/094578 A2) as applied to claims 21, 22, 26, 17, 30, and 34 above and in view of Froitzheim (EP 1732142 A1).

Regarding claim 39 , modified Meier discloses all of the claim limitations as set forth above.

However, modified Meier does not disclose the doped diffusion region in the silicon substrate includes a first doped diffusion region and a second doped diffusion region, the first doped diffusion region is located under and in contact with the front metal contact, and the first doped diffusion region has a lower sheet resistance than the second doped diffusion region, and wherein the first doped diffusion region has a circular shape from a plan view of the front surface.

Froitzheim discloses a solar cell (see Fig. 3) wherein the area metal contact regions (16) contacts includes areas of high doping (38) which surround the metal contact regions (see Fig. 3 [0034]).

It would have been obvious to one of ordinary skill in the art at the time of the invention to modify the front surface field formed in the substrate of modified Meier by adding in highly doped regions under the metallic contacts as disclosed by Froitzheim because doing so reduces the contact resistance and will improve the efficiency of the solar cell.

Regarding claim 40, modified Meier discloses all of the claim limitations as set forth above.

With regards to "wherein the first doped diffusion region is formed from a different dopant source than the second doped diffusion region", the cited prior art teaches all of the positively recited structure of the claimed apparatus or product. The determination of patentability is based upon the apparatus structure itself. The patentability of a product or apparatus does not depend on its method of production or formation. If the product in the product-by-process claim is the same as or obvious from a product of the prior art, the claim is unpatentable even though the prior product was made by a different process. See *In re Thorpe*, 777 F.2d 695, 698, 227 USPQ 964, 966 (Fed. Cir. 1985) (see MPEP § 2113).

Furthermore, different dopants will diffuse into region 38 than into region 39 at two different times and thus these are different sources.

Regarding claims 41 and 42, modified Meier discloses all of the claim limitations as set forth above.

Please see modification above with Froitzheim and Xi.

Froitzheim discloses that the front metal contact is narrower than the first doped diffusion region and wherein the antireflection layer is formed over the second doped diffusion region and a portion of the first doped diffusion region, whereby the antireflective layer has contact holes through which the front metal contact contacts the first doped diffusion region (See Fig. 3).

Claim 43 is/are rejected under pre-AIA 35 U.S.C. 103(a) as being unpatentable over Meier (US 6,262,359) in view of Jordan (US 2005/0268963 A1) in view of Okayasu (JP07-106611, Human Translation) in view of Borden (WO 2009/094578 A2) in view of Froitzheim (EP 1732142 A1) as applied to claims 39, 40, 41 and 42 above and in further view of Xi (US 4,865,999).

Regarding claim 43, modified Meier discloses all of the claim limitations as set forth above.

Modified Meier does not disclose that the point contacts are dot shaped.

Xi discloses that either point contacts or electrical contact dots can be used as electrical contacts for solar cells (C3/L40-45).

It would have been obvious to one of ordinary skill in the art at the time of the invention to modify the shape of the contacts of modified Meier to have dot contact shape because as disclosed by Xi having a dot like point contact shape is known and one of ordinary skill in the art would have been able to carry out such a substitution, and the results would be reasonably predictable.

Note that the cross-sectional shape of the point contact of modified Meier will have the corresponding the plurality of highly doped regions under the dot-shaped contacts having a dot shape as seen from a plan view of the solar cell.

Double Patenting

The nonstatutory double patenting rejection is based on a judicially created doctrine grounded in public policy (a policy reflected in the statute) so as to prevent the unjustified or improper timewise extension of the "right to exclude" granted by a patent and to prevent possible harassment by multiple assignees. A nonstatutory double patenting rejection is appropriate where the conflicting claims are not identical, but at least one examined application claim is not patentably distinct from the reference claim(s) because the examined application claim is either anticipated by, or would have been obvious over, the reference claim(s). See, e.g., *In re Berg*, 140 F.3d 1428, 46 USPQ2d 1226 (Fed. Cir. 1998); *In re Goodman*, 11 F.3d 1046, 29 USPQ2d 2010 (Fed. Cir. 1993); *In re Longi*, 759 F.2d 887, 225 USPQ 645 (Fed. Cir. 1985); *In re Van Ornum*, 686 F.2d 937, 214 USPQ 761 (CCPA 1982); *In re Vogel*, 422 F.2d 438, 164 USPQ 619 (CCPA 1970); *In re Thorington*, 418 F.2d 528, 163 USPQ 644 (CCPA 1969).

A timely filed terminal disclaimer in compliance with 37 CFR 1.321(c) or 1.321(d) may be used to overcome an actual or provisional rejection based on nonstatutory double patenting provided the reference application or patent either is shown to be commonly owned with the examined application, or claims an invention made as a result of activities undertaken within the scope of a joint research agreement. See MPEP § 717.02 for applications subject to examination under the first inventor to file provisions of the AIA as explained in MPEP § 2159. See MPEP § 2146 *et seq.* for

applications not subject to examination under the first inventor to file provisions of the AIA. A terminal disclaimer must be signed in compliance with 37 CFR 1.321(b).

The USPTO Internet website contains terminal disclaimer forms which may be used. Please visit www.uspto.gov/patent/patents-forms. The filing date of the application in which the form is filed determines what form (e.g., PTO/SB/25, PTO/SB/26, PTO/AIA/25, or PTO/AIA/26) should be used. A web-based eTerminal Disclaimer may be filled out completely online using web-screens. An eTerminal Disclaimer that meets all requirements is auto-processed and approved immediately upon submission. For more information about eTerminal Disclaimers, refer to www.uspto.gov/patents/process/file/efs/guidance/eTD-info-I.jsp.

Claims 21-30 and 34-38 are rejected on the ground of nonstatutory double patenting as being unpatentable over claims 1-12 of U.S. Patent No. 8,222,516 in view of Meier (US 6,262,359) in view of Borden (WO 2009/094578 A2) in view of Schmidt (Surface passivation of silicon solar cells using plasma-enhanced chemical-vapour-deposited SiN films and thin thermal SiO_2/plasma SiN stacks).

Although the claims at issue are not identical, they are not patentably distinct from each other because they recite a substantially similar structure for a solar cell with the exception of:

- the doped diffusion region in the silicon substrate (Meier)
- tunnel oxide thickness (SiO_2 of around 12 Å taught by Borden)

It would have been obvious to one of ordinary skill in the art at the time of filing to modify the front surface of the solar cell surface of claims 1-12 of U.S. Patent No.

8,222,516 as disclosed by Meier because doing so can improve solar cell performed by forming front surface field.

It would have been obvious to one of ordinary skill in the art at the time of the invention to modify the interface between the doped polycrystalline emitter layer and monocrystalline substrate of claims 1-12 of U.S. Patent No. 8,222,516 by having a tunneling oxide, SiO_2 of around 12 Å, at the interface as disclosed by Borden because it prevents epitaxial growth of the emitter layer and further it protects the crystalline surface from plasma damage of the deposited emitter layer.

Response to Arguments

Applicant argues that the combination of Meier, Jordan, Okayasu, and Borden would result in a solar cell having a polysilicon region located at the front surface.

Examiner respectfully disagrees. The polysilicon emitter is on the back surface since the p-type polysilicon emitter forms a p-n junction with the n-type silicon substrate on the back side since there is a backside junction in Meier, please see rejection of claim 21 above.

Conclusion

Applicant's amendment necessitated the new ground(s) of rejection presented in this Office action. Accordingly, **THIS ACTION IS MADE FINAL**. See MPEP § 706.07(a). Applicant is reminded of the extension of time policy as set forth in 37 CFR 1.136(a).

A shortened statutory period for reply to this final action is set to expire THREE MONTHS from the mailing date of this action. In the event a first reply is filed within TWO MONTHS of the mailing date of this final action and the advisory action is not

mailed until after the end of the THREE-MONTH shortened statutory period, then the shortened statutory period will expire on the date the advisory action is mailed, and any extension fee pursuant to 37 CFR 1.136(a) will be calculated from the mailing date of the advisory action. In no event, however, will the statutory period for reply expire later than SIX MONTHS from the date of this final action.

Any inquiry concerning this communication or earlier communications from the examiner should be directed to DEVINA PILLAY whose telephone number is (571)270-1180. The examiner can normally be reached Monday-Friday 9:30-6:00.

Examiner interviews are available via telephone, in-person, and video conferencing using a USPTO supplied web-based collaboration tool. To schedule an interview, applicant is encouraged to use the USPTO Automated Interview Request (AIR) at http://www.uspto.gov/interviewpractice.

If attempts to reach the examiner by telephone are unsuccessful, the examiner's supervisor, Jeffrey T Barton can be reached on 517-272-1307. The fax phone number for the organization where this application or proceeding is assigned is 571-273-8300.

Information regarding the status of published or unpublished applications may be obtained from Patent Center. Unpublished application information in Patent Center is available to registered users. To file and manage patent submissions in Patent Center, visit: https://patentcenter.uspto.gov. Visit https://www.uspto.gov/patents/apply/patent-center for more information about Patent Center and https://www.uspto.gov/patents/docx for information about filing in DOCX format. For additional questions, contact the Electronic Business Center (EBC) at 866-217-9197

(toll-free). If you would like assistance from a USPTO Customer Service

Representative, call 800-786-9199 (IN USA OR CANADA) or 571-272-1000.

DEVINA PILLAY
Primary Examiner
Art Unit 1726

/DEVINA PILLAY/
Primary Examiner, Art Unit 1726

Notice of References Cited	Application/Control No. 17/870,268	Applicant(s)/Patent Under Reexamination COUSINS, Peter John	
	Examiner DEVINA PILLAY	Art Unit 1726	Page 1 of 1

U.S. PATENT DOCUMENTS

*		Document Number Country Code-Number-Kind Code	Date YYYY-MM-DD	Name	CPC Classification	US Classification
*	A	US-20080216893-A1	2008-09-11	Russell; Richard W.J.	H01L31/068	438/94
*	B	US-6429037-B1	2002-08-06	Wenham; Stuart Ross	H01L31/1804	438/57
*	C	US-4865999-A	1989-09-12	Xi; Jianping	H01L31/022425	136/258
	D					
	E					
	F					
	G					
	H					
	I					
	J					
	K					
	L					
	M					

FOREIGN PATENT DOCUMENTS

*		Document Number Country Code-Number-Kind Code	Date YYYY-MM-DD	Country	Name	CPC Classification
	N	EP-1732142-A1	2006-12-13	EP	FROITZHEIM A	H01L31/068
	O					
	P					
	Q					
	R					
	S					
	T					

NON-PATENT DOCUMENTS

*		Include as applicable: Author, Title Date, Publisher, Edition or Volume, Pertinent Pages)
	U	Solar Energy Materials & Solar Cells 91 (2007) 1638â1644 (Year: 2007)
	V	
	W	
	X	

*A copy of this reference is not being furnished with this Office action. (See MPEP § 707.05(a).)
Dates in YYYY-MM-DD format are publication dates. Classifications may be US or foreign.

Search Notes	Application/Control No.	Applicant(s)/Patent Under Reexamination
	17/870,268	COUSINS, Peter John
	Examiner	**Art Unit**
	DEVINA PILLAY	1726

CPC - Searched*		
Symbol	**Date**	**Examiner**
H01L31/0236,0745,1804,022425,068,182,056	01/18/2023	DP
Y02E10/52,547	01/18/2023	DP
Y02P70/521	01/18/2023	DP

CPC Combination Sets - Searched*		
Symbol	**Date**	**Examiner**

US Classification - Searched*			
Class	**Subclass**	**Date**	**Examiner**

* See search history printout included with this form or the SEARCH NOTES box below to determine the scope of the search.

Search Notes		
Search Notes	**Date**	**Examiner**
Inventor and Assignee search	01/18/2023	DP
Search	01/18/2023	DP
CPC Search Text Limited	01/18/2023	DP
Updated CPC Search Text Limited	09/09/2024	DP

Interference Search			
US Class/CPC Symbol	**US Subclass/CPC Group**	**Date**	**Examiner**

PE2E SEARCH - Search History (Prior Art)

Ref #	Hits	Search Query	DBs	Default Operator	Plurals	British Equivalents	Time Stamp
L1	2	"20030134469"	(US-PGPUB; USPAT; USOCR; FPRS; EPO; JPO; DERWENT; IBM_TDB)	OR	ON	ON	2009/12/07 08:43 AM
L2	4	("2003/0134469").URPN.	(USPAT)	OR	ON	ON	2009/12/07 08:56 AM
L3	0	"10353261"	(USPAT)	OR	ON	ON	2009/12/07 08:57 AM
L4	1	"10/353261"	(USPAT)	OR	ON	ON	2009/12/07 08:57 AM
L5	19	("2999240" | "4001864" | "4104091" | "4133698" | "4142200" | "4152824" | "4156822" | "4201798" | "4377901" | "4478879" | "5013396" | "5543333" | "6096968" | "6136673" | "6146483" | "6206996" | "6278053").PN. OR ("6825104").URPN.	(US-PGPUB; USPAT; USOCR)	OR	ON	ON	2009/12/07 08:58 AM
L6	39	(back near surface near field) and texture and dielectric	(US-PGPUB; USPAT; USOCR)	OR	ON	ON	2009/12/07 08:58 AM
L7	18	(back near surface near field) and texture and dielectric and anti near reflective	(US-PGPUB; USPAT; USOCR)	OR	ON	ON	2009/12/07 09:06 AM
L8	18	(back near surface near field) and texture and dielectric and anti near reflective	(US-PGPUB; USPAT; USOCR; FPRS; EPO; JPO; DERWENT; IBM_TDB)	OR	ON	ON	2009/12/07 09:06 AM
L9	10	(back near surface near field) and texture and antireflective and emitter	(US-PGPUB; USPAT; USOCR)	OR	ON	ON	2009/12/07 09:09 AM
L10	65	texture and antireflective and emitter	(US-PGPUB; USPAT; USOCR)	OR	ON	ON	2009/12/07 09:09 AM
L11	66	texture and antireflective and emitter	(US-PGPUB; USPAT; USOCR; FPRS; EPO; JPO; DERWENT; IBM_TDB)	OR	ON	ON	2009/12/07 09:10 AM
L12	120	textur$4 and antireflective and emitter	(US-PGPUB; USPAT; USOCR; FPRS; EPO; JPO; DERWENT; IBM_TDB)	OR	ON	ON	2009/12/07 09:11 AM
L13	54	L12 not L11	(US-PGPUB; USPAT; USOCR; FPRS; EPO;	OR	ON	ON	2009/12/07 09:11 AM

			JPO; DERWENT; IBM_TDB)				
L14	18	L13 and dielectric	(US-PGPUB; USPAT; USOCR; FPRS; EPO; JPO; DERWENT; IBM_TDB)	OR	ON	ON	2009/12/07 09:12 AM
L15	3	"20070082206"	(US-PGPUB; USPAT; USOCR; FPRS; EPO; JPO; DERWENT; IBM_TDB)	OR	ON	ON	2009/12/07 09:17 AM
L16	443	dielectric and antireflective and emitter	(US-PGPUB; USPAT; USOCR; FPRS; EPO; JPO; DERWENT; IBM_TDB)	OR	ON	ON	2009/12/07 09:17 AM
L17	132	dielectric and antireflective and emitter and ((solar near cell) (photovoltaic))	(US-PGPUB; USPAT; USOCR; FPRS; EPO; JPO; DERWENT; IBM_TDB)	OR	ON	ON	2009/12/07 09:18 AM
L18	192	(back near surface near field) and dielectric	(US-PGPUB; USPAT; USOCR)	OR	ON	ON	2009/12/07 09:18 AM
L19	1	"20030134469"	(US-PGPUB; USPAT; USOCR)	OR	ON	ON	2009/12/07 09:28 AM
L20	19	("3413157" | "4012235" | "4239810" | "4313768" | "4604791" | "4624045" | "4633031" | "4781766" | "4836861" | "4910153" | "5879977" | "6111191").PN. OR ("6210991").URPN.	(US-PGPUB; USPAT; USOCR)	OR	ON	ON	2009/12/07 09:51 AM
L21	2	"20060196535"	(US-PGPUB; USPAT; USOCR)	OR	ON	ON	2009/12/07 09:55 AM
L22	14	("20030070707" | "4070097" | "4084099" | "4278831" | "4496788" | "5057439" | "5066340" | "5213628" | "5468652" | "5728230" | "6013582" | "6118258" | "6210991" | "6465724").PN. OR ("7554031").URPN.	(US-PGPUB; USPAT; USOCR)	OR	ON	ON	2009/12/07 10:13 AM
L23	346	dielectric and (antireflection or anti near reflection or ARC) and emitter and textur$5	(US-PGPUB; USPAT; USOCR)	OR	ON	ON	2009/12/07 10:17 AM
L24	347	dielectric and (antireflection or anti near reflection or ARC) and emitter and textur$5	(US-PGPUB; USPAT; USOCR; FPRS; EPO; JPO; DERWENT; IBM_TDB)	OR	ON	ON	2009/12/07 10:17 AM
L25	124	L23 and ((solar near cell) (photovoltaic))	(US-PGPUB; USPAT; USOCR; FPRS; EPO; JPO; DERWENT;	OR	ON	ON	2009/12/07 10:17 AM

			IBM_TDB)				
L26	7	11/263159	(US-PGPUB; USPAT; USOCR; FPRS; EPO; JPO; DERWENT; IBM_TDB)	OR	ON	ON	2009/12/07 10:50 AM
L27	29	L24 and optoelectronic	(US-PGPUB; USPAT; USOCR; FPRS; EPO; JPO; DERWENT; IBM_TDB)	OR	ON	ON	2009/12/07 11:08 AM
L28	479	dielectric and (antireflection or anti near reflection or ARC) and (emitter or collector) and textur$5	(US-PGPUB; USPAT; USOCR)	OR	ON	ON	2009/12/07 11:09 AM
L29	133	L28 not L24	(US-PGPUB; USPAT; USOCR)	OR	ON	ON	2009/12/07 11:09 AM
L30	32	L29 and ((solar near cell) (photovoltaic))	(US-PGPUB; USPAT; USOCR; FPRS; EPO; JPO; DERWENT; IBM_TDB)	OR	ON	ON	2009/12/07 11:09 AM
L31	19	("4090213" | "4131486" | "4133698" | "4232245" | "4255211" | "4315097" | "4316049" | "4341918" | "4365262" | "4367368" | "4385198" | "4427839").PN. OR ("4665277").URPN.	(US-PGPUB; USPAT; USOCR)	OR	ON	ON	2009/12/07 11:32 AM
L32	14	("3150999" | "4227942" | "4348254").PN. OR ("4427839").URPN.	(US-PGPUB; USPAT; USOCR)	OR	ON	ON	2009/12/07 11:35 AM
L33	1092	(antireflection or anti near reflection or ARC) and emitter and textur$5	(US-PGPUB; USPAT; USOCR; FPRS; EPO; JPO; DERWENT; IBM_TDB)	OR	ON	ON	2009/12/07 11:47 AM
L34	233	L33 and (solar near cell)	(US-PGPUB; USPAT; USOCR; FPRS; EPO; JPO; DERWENT; IBM_TDB)	OR	ON	ON	2009/12/07 11:47 AM
L35	215	L34 not (L17)	(US-PGPUB; USPAT; USOCR; FPRS; EPO; JPO; DERWENT; IBM_TDB)	OR	ON	ON	2009/12/07 11:47 AM
L36	215	L35 not L29	(US-PGPUB; USPAT; USOCR; FPRS; EPO; JPO; DERWENT; IBM_TDB)	OR	ON	ON	2009/12/07 11:48 AM
L37	0	2004/0112426	(US-PGPUB; USPAT; USOCR; FPRS; EPO; JPO; DERWENT; IBM_TDB)	OR	ON	ON	2009/12/07 12:08 PM
L38	2	"20040112426"	(US-PGPUB; USPAT; USOCR; FPRS; EPO;	OR	ON	ON	2009/12/07 12:08 PM

			JPO; DERWENT; IBM_TDB)				
L39	10	("20040200520" | "4234352" | "4478879" | "4920639" | "4927770" | "5053083" | "5320684" | "5538564" | "5641362" | "6624737").PN. OR ("7339110").URPN.	(US-PGPUB; USPAT; USOCR)	OR	ON	ON	2009/12/07 12:14 PM
L40	88	(back near surface near field) and antireflective and emitter	(US-PGPUB; USPAT; USOCR; FPRS; EPO; JPO; DERWENT; IBM_TDB)	OR	ON	ON	2009/12/07 12:23 PM
L41	175	(back near surface near field) and (antireflective ARC (anti near reflective)) and emitter	(US-PGPUB; USPAT; USOCR; FPRS; EPO; JPO; DERWENT; IBM_TDB)	OR	ON	ON	2009/12/07 12:24 PM
L42	87	L41 not L40	(US-PGPUB; USPAT; USOCR; FPRS; EPO; JPO; DERWENT; IBM_TDB)	OR	ON	ON	2009/12/07 12:24 PM
L43	138	L41 not L36	(US-PGPUB; USPAT; USOCR; FPRS; EPO; JPO; DERWENT; IBM_TDB)	OR	ON	ON	2009/12/07 12:24 PM
L44	26	("2841860" | "2854363" | "3134906" | "4070689" | "4341589" | "4428783" | "4523966" | "4665277" | "4703553" | "5156978").PN. OR ("5928438").URPN.	(US-PGPUB; USPAT; USOCR)	OR	ON	ON	2009/12/07 12:30 PM
L45	19	("4090213" | "4131486" | "4133698" | "4232245" | "4255211" | "4315097" | "4316049" | "4341918" | "4365262" | "4367368" | "4385198" | "4427839").PN. OR ("4665277").URPN.	(US-PGPUB; USPAT; USOCR)	OR	ON	ON	2009/12/07 01:00 PM
L46	11	("3081370" | "3757123" | "3948682" | "3969746").PN. OR ("4131486").URPN.	(US-PGPUB; USPAT; USOCR)	OR	ON	ON	2009/12/07 01:02 PM
L47	15	"5258077"	(US-PGPUB; USPAT; USOCR; FPRS; EPO; JPO; DERWENT; IBM_TDB)	OR	ON	ON	2009/12/07 02:11 PM
L48	14	("3895975" | "4056879" | "4106047" | "4131486" | "4226017" | "4916503" | "5538564" | "5641362" | "5951742" | "5973260" | "6071753").PN. OR	(US-PGPUB; USPAT; USOCR)	OR	ON	ON	2009/12/07 02:13 PM

		("6262359").URPN.					
L49	7	(back near junction) and (passiv$4 with "SiO.sub.2")	(US-PGPUB; USPAT; USOCR; FPRS; EPO; JPO; DERWENT; IBM_TDB)	OR	ON	ON	2009/12/07 03:25 PM
L50	10	(back with surface with field) and (passiv$4 with "SiO.sub.2")	(US-PGPUB; USPAT; USOCR; FPRS; EPO; JPO; DERWENT; IBM_TDB)	OR	ON	ON	2009/12/07 03:27 PM
L51	15	(passiv$4 with "SiO.sub.2" with emitter)	(US-PGPUB; USPAT; USOCR; FPRS; EPO; JPO; DERWENT; IBM_TDB)	OR	ON	ON	2009/12/07 03:28 PM
L52	1984	(passiv$4 with ("SiO.sub.2" or (silicon near dioxide)))	(US-PGPUB; USPAT; USOCR; FPRS; EPO; JPO; DERWENT; IBM_TDB)	OR	ON	ON	2009/12/07 03:31 PM
L53	67	(passiv$4 with ("SiO.sub.2" or (silicon near dioxide))) and solar near cell	(US-PGPUB; USPAT; USOCR; FPRS; EPO; JPO; DERWENT; IBM_TDB)	OR	ON	ON	2009/12/07 03:31 PM
L54	3	"20070082206"	(US-PGPUB; USPAT; USOCR; FPRS; EPO; JPO; DERWENT; IBM_TDB)	OR	ON	ON	2009/12/07 03:37 PM
L55	14	("3895975" | "4056879" | "4106047" | "4131486" | "4226017" | "4916503" | "5538564" | "5641362" | "5951742" | "5973260" | "6071753").PN. OR ("6262359").URPN.	(US-PGPUB; USPAT; USOCR)	OR	ON	ON	2009/12/07 04:00 PM
L56	163	(back near junction) and (solar near cell)	(US-PGPUB; USPAT; USOCR; FPRS; EPO; JPO; DERWENT; IBM_TDB)	OR	ON	ON	2009/12/07 04:13 PM
L57	141	(back near junction) and (photovoltaic)	(US-PGPUB; USPAT; USOCR; FPRS; EPO; JPO; DERWENT; IBM_TDB)	OR	ON	ON	2009/12/07 04:29 PM
L58	39	L57 not L56	(US-PGPUB; USPAT; USOCR; FPRS; EPO; JPO; DERWENT; IBM_TDB)	OR	ON	ON	2009/12/07 04:29 PM
L59	345	(back near2 junction) and (solar near cell or (photovoltaic))	(US-PGPUB; USPAT; USOCR; FPRS; EPO; JPO; DERWENT; IBM_TDB)	OR	ON	ON	2009/12/07 04:31 PM
L60	182	L59 not L56	(US-PGPUB; USPAT; USOCR; FPRS; EPO; JPO; DERWENT; IBM_TDB)	OR	ON	ON	2009/12/07 04:31 PM
L61	32	L60 and emitter	(US-PGPUB; USPAT;	OR	ON	ON	2009/12/07

			USOCR; FPRS; EPO; JPO; DERWENT; IBM_TDB)				04:31 PM
L62	16	(US-20050268963-$ or US-20020153039-$ or US-20060196535-$ or US-20090101199-$ or US-20040097062-$ or US-20040112426-$ or US-20070186970-$).did. or (US-4379944-$ or US-4665277-$ or US-5320684-$ or US-6210991-$ or US-5792280-$ or US-5899704-$ or US-6262359-$ or US-5258077-$).did. or (US-20090205712-$).did.	(US-PGPUB; USPAT; DERWENT)	OR	ON	ON	2009/12/07 04:33 PM
L63	0	L62 and (isolation near2 trench)	(US-PGPUB; USPAT; USOCR; FPRS; EPO; JPO; DERWENT; IBM_TDB)	OR	ON	ON	2009/12/07 04:34 PM
L64	346	dielectric and (antireflection or anti near reflection or ARC) and emitter and textur$5	(US-PGPUB; USPAT; USOCR)	OR	ON	ON	2009/12/07 04:34 PM
L65	16	L64 and (isolation near trench)	(US-PGPUB; USPAT; USOCR)	OR	ON	ON	2009/12/07 04:34 PM
L66	251	solar near cell and (isolation near trench)	(US-PGPUB; USPAT; USOCR)	OR	ON	ON	2009/12/07 04:35 PM
L67	232	(back with surface with field) and (isolation near trench)	(US-PGPUB; USPAT; USOCR; FPRS; EPO; JPO; DERWENT; IBM_TDB)	OR	ON	ON	2009/12/07 04:36 PM
L68	2	L67 and solar near cell	(US-PGPUB; USPAT; USOCR; FPRS; EPO; JPO; DERWENT; IBM_TDB)	OR	ON	ON	2009/12/07 04:36 PM
L69	24	(back with surface with field) and (isolation near2 edge) and (solar near cell)	(US-PGPUB; USPAT; USOCR; FPRS; EPO; JPO; DERWENT; IBM_TDB)	OR	ON	ON	2009/12/07 04:40 PM
L70	49	("20030134469"|"20040200520"|"20040200520"|"20060130891"|"20070082206"|"3961997"|"3961997"|"4927770"|"4927770"|"5030295"|"5053083"|"5057439"|"5164019"|"5217539"|"5360990"|"5369291"|"5641362"|"5030295"|"5053083"|"5057439"|"5164019"|"	(US-PGPUB; USPAT; USOCR; FPRS; EPO; JPO; DERWENT; IBM_TDB)	OR	ON	ON	2009/12/07 04:54 PM

		5217539"|"5266125"|"5360990"|"5369291"|"5641362"|"6274402"|"6313395"|"6333457"|"6387726"|"6423568"|"6998288"|"6998288"|"6274402"|"6313395"|"6333457"|"6337283"|"6387726"|"6423568"|"6524880"|"6998288"|"7135350"|"7135350").PN.					
L71	288	oxide with passiv$5 with emitter	(US-PGPUB; USPAT; USOCR; FPRS; EPO; JPO; DERWENT; IBM_TDB)	OR	ON	ON	2009/12/07 05:00 PM
L72	32	L71 and ((solar near cell) photovoltaic)	(US-PGPUB; USPAT; USOCR; FPRS; EPO; JPO; DERWENT; IBM_TDB)	OR	ON	ON	2009/12/07 05:00 PM
L73	29	"4726850"	(US-PGPUB; USPAT; USOCR; FPRS; EPO; JPO; DERWENT; IBM_TDB)	OR	ON	ON	2009/12/07 05:29 PM
L74	0	(back with surface with field) and (isolat$3 near5 edge with trench) and (solar near cell)	(US-PGPUB; USPAT; USOCR; FPRS; EPO; JPO; DERWENT; IBM_TDB)	OR	ON	ON	2009/12/07 05:34 PM
L75	32	(back with surface with field) and (isolat$3 near5 edge) and (solar near cell)	(US-PGPUB; USPAT; USOCR; FPRS; EPO; JPO; DERWENT; IBM_TDB)	OR	ON	ON	2009/12/07 05:34 PM
L76	39	(back with surface with field) and (isolation near5 trench with etch)	(US-PGPUB; USPAT; USOCR; FPRS; EPO; JPO; DERWENT; IBM_TDB)	OR	ON	ON	2009/12/07 05:40 PM
L77	20	(solar near cell) and (isolation near5 trench with etch)	(US-PGPUB; USPAT; USOCR; FPRS; EPO; JPO; DERWENT; IBM_TDB)	OR	ON	ON	2009/12/07 05:41 PM
L78	304	(solar near cell) and (isolation near5 trench)	(US-PGPUB; USPAT; USOCR; FPRS; EPO; JPO; DERWENT; IBM_TDB)	OR	ON	ON	2009/12/07 05:42 PM
L79	7	(solar near cell) and (isolation near5 trench with edge)	(US-PGPUB; USPAT; USOCR; FPRS; EPO; JPO; DERWENT; IBM_TDB)	OR	ON	ON	2009/12/07 05:42 PM
L80	24	(trench with (electric$4 near isolat$4)) and emitter and (solar near cell)	(US-PGPUB; USPAT; USOCR; FPRS; EPO; JPO; DERWENT; IBM_TDB)	OR	ON	ON	2009/12/07 05:52 PM
L81	41	(silver near5 ("SiO.sub.2" or silicon near dioxide)) and	(US-PGPUB; USPAT; USOCR; FPRS; EPO; JPO; DERWENT;	OR	ON	ON	2009/12/07 06:06 PM

		(solar near cell) and emitter	IBM_TDB)				
L82	42	(silver near5 ("SiO.sub.2" or silicon near dioxide or passiv$4)) and (solar near cell) and emitter	(US-PGPUB; USPAT; USOCR; FPRS; EPO; JPO; DERWENT; IBM_TDB)	OR	ON	ON	2009/12/07 06:07 PM
L83	50	((silver or Ag) near5 ("SiO.sub.2" or silicon near dioxide or passiv$4)) and (solar near cell) and emitter	(US-PGPUB; USPAT; USOCR; FPRS; EPO; JPO; DERWENT; IBM_TDB)	OR	ON	ON	2009/12/07 06:07 PM
L84	44	((silver) near5 ("SiO.sub.2" or silicon near dioxide or passiv$4)) and ((solar near cell) or photovoltaic) and emitter	(US-PGPUB; USPAT; USOCR; FPRS; EPO; JPO; DERWENT; IBM_TDB)	OR	ON	ON	2009/12/07 06:08 PM
L85	90	((silver) near5 ("SiO.sub.2" or silicon near dioxide or passiv$4)) and ((solar near cell) or photovoltaic)	(US-PGPUB; USPAT; USOCR; FPRS; EPO; JPO; DERWENT; IBM_TDB)	OR	ON	ON	2009/12/07 06:09 PM
L86	46	L85 not L84	(US-PGPUB; USPAT; USOCR; FPRS; EPO; JPO; DERWENT; IBM_TDB)	OR	ON	ON	2009/12/07 06:09 PM
L87	105	((silver) near5 ("SiO.sub.2" or silicon near dioxide or passiv$4)) and ((solar near cell) or photovoltaic or optoelectronic)	(US-PGPUB; USPAT; USOCR; FPRS; EPO; JPO; DERWENT; IBM_TDB)	OR	ON	ON	2009/12/07 06:12 PM
L88	15	L87 not L85	(US-PGPUB; USPAT; USOCR; FPRS; EPO; JPO; DERWENT; IBM_TDB)	OR	ON	ON	2009/12/07 06:12 PM
L89	345	((silver) with ("SiO.sub.2" or silicon near dioxide or passiv$4)) and ((solar near cell) or photovoltaic or optoelectronic)	(US-PGPUB; USPAT; USOCR; FPRS; EPO; JPO; DERWENT; IBM_TDB)	OR	ON	ON	2009/12/07 06:13 PM
L90	240	L89 not L87	(US-PGPUB; USPAT; USOCR; FPRS; EPO; JPO; DERWENT; IBM_TDB)	OR	ON	ON	2009/12/07 06:13 PM
L91	14	("3150999" | "4227942" | "4348254").PN. OR ("4427839").URPN.	(US-PGPUB; USPAT; USOCR)	OR	ON	ON	2009/12/07 06:17 PM

L92	1122	silver with infrared with reflect$4	(US-PGPUB; USPAT; USOCR)	OR	ON	ON	2009/12/07 06:38 PM
L93	584	silver near5 infrared with reflect$4	(US-PGPUB; USPAT; USOCR)	OR	ON	ON	2009/12/07 06:38 PM
L94	565	silver near5 infrared near5 reflect$4	(US-PGPUB; USPAT; USOCR)	OR	ON	ON	2009/12/07 06:38 PM
L95	25	L94 and solar near cell	(US-PGPUB; USPAT; USOCR)	OR	ON	ON	2009/12/07 06:38 PM
L96	29	L94 and photovoltaic	(US-PGPUB; USPAT; USOCR)	OR	ON	ON	2009/12/07 06:41 PM
L97	18	"5479018"	(US-PGPUB; USPAT; USOCR)	OR	ON	ON	2009/12/07 06:56 PM
L98	1822	dichroic near coating	(US-PGPUB; USPAT; USOCR; FPRS; EPO; JPO; DERWENT; IBM_TDB)	OR	ON	ON	2009/12/08 07:20 AM
L99	54	dichroic near coating and (powder)	(US-PGPUB; USPAT; USOCR; FPRS; EPO; JPO; DERWENT; IBM_TDB)	OR	ON	ON	2009/12/08 07:21 AM
L100	296	(fluorescent near powder) and (light near5 film)	(US-PGPUB; USPAT; USOCR; FPRS; EPO; JPO; DERWENT; IBM_TDB)	OR	ON	ON	2009/12/08 07:22 AM
L101	1	6262359B1	(US-PGPUB; USPAT; USOCR; FPRS; EPO; JPO; DERWENT; IBM_TDB)	OR	ON	ON	2009/12/10 07:08 AM
L102	1	2000-587576.NRAN.	(DERWENT)	OR	ON	ON	2009/12/10 07:08 AM
L103	5	"6262359"	(US-PGPUB; USPAT; USOCR; FPRS; EPO; JPO; DERWENT; IBM_TDB)	OR	ON	ON	2009/12/10 07:08 AM
L104	14	("3895975" | "4056879" | "4106047" | "4131486" | "4226017" | "4916503" | "5538564" | "5641362" | "5951742" | "5973260" | "6071753").PN. OR ("6262359").URPN.	(US-PGPUB; USPAT; USOCR)	OR	ON	ON	2009/12/10 07:09 AM
L105	11	("3081370" | "3757123" | "3948682" | "3969746").PN. OR ("4131486").URPN.	(US-PGPUB; USPAT; USOCR)	OR	ON	ON	2009/12/10 07:09 AM
L106	12	("4090213" | "4131486" | "4133698" | "4232245" | "4255211" | "4315097" | "4316049" | "4341918" | "4365262" | "4367368" | "4385198" | "4427839").PN.	(US-PGPUB; USPAT; USOCR)	OR	ON	ON	2009/12/10 07:11 AM
L107	14	("3150999" | "4227942"	(US-PGPUB; USPAT;	OR	ON	ON	2009/12/10

		| "4348254").PN. OR ("4427839").URPN.	USOCR)				07:11 AM
L108	19	("4090213" | "4131486" | "4133698" | "4232245" | "4255211" | "4315097" | "4316049" | "4341918" | "4365262" | "4367368" | "4385198" | "4427839").PN. OR ("4665277").URPN.	(US-PGPUB; USPAT; USOCR)	OR	ON	ON	2009/12/10 07:11 AM
L109	9	floating same emitter same solar same cell	(US-PGPUB; USPAT; USOCR)	OR	ON	ON	2009/12/10 07:33 AM
L110	19	("4090213" | "4131486" | "4133698" | "4232245" | "4255211" | "4315097" | "4316049" | "4341918" | "4365262" | "4367368" | "4385198" | "4427839").PN. OR ("4665277").URPN.	(US-PGPUB; USPAT; USOCR)	OR	ON	ON	2009/12/10 07:35 AM
L111	7	"6262359"	(US-PGPUB; USPAT; USOCR; FPRS; EPO; JPO; DERWENT; IBM_TDB)	OR	ON	ON	2010/05/20 07:23 AM
L112	16	("3895975" | "4056879" | "4106047" | "4131486" | "4226017" | "4916503" | "5538564" | "5641362" | "5951742" | "5973260" | "6071753").PN. OR ("6262359").URPN.	(US-PGPUB; USPAT; USOCR)	OR	ON	ON	2010/05/20 07:23 AM
L113	4	L112 and polycrystal$4	(US-PGPUB; USPAT; USOCR)	OR	ON	ON	2010/05/20 07:23 AM
L114	9	("4377901" | "4478879" | "5082791" | "5665175").PN. OR ("6071753").URPN.	(US-PGPUB; USPAT; USOCR)	OR	ON	ON	2010/05/20 07:26 AM
L115	10	("20020011590" | "5103851" | "5437734" | "5738732" | "6071753" | "6130380" | "6166320" | "6548751").PN. OR ("6927417").URPN.	(US-PGPUB; USPAT; USOCR)	OR	ON	ON	2010/05/20 07:28 AM
L116	6	("4837607" | "5543333" | "5738732").PN. OR ("6130380").URPN.	(US-PGPUB; USPAT; USOCR)	OR	ON	ON	2010/05/20 07:29 AM
L117	414	polycrystalline near5 substrate same emitter	(US-PGPUB; USPAT; USOCR)	OR	ON	ON	2010/05/20 07:43 AM
L118	45	L117 and ((solar photovoltaic) near (battery device cell))	(US-PGPUB; USPAT; USOCR)	OR	ON	ON	2010/05/20 07:43 AM
L119	10	"4665277"	(US-PGPUB; USPAT; USOCR; FPRS; EPO; JPO; DERWENT;	OR	ON	ON	2010/05/20 08:39 AM

			IBM_TDB)				
L120	1	"12070742"	(US-PGPUB; USPAT; USOCR; FPRS; EPO; JPO; DERWENT; IBM_TDB)	OR	ON	ON	2010/05/20 08:44 AM
L121	1	"12070742"	(US-PGPUB; USPAT; USOCR; FPRS; EPO; JPO; DERWENT; IBM_TDB)	OR	ON	ON	2012/03/15 01:12 PM
L122	41	polysilicon near2 emitter and (photovoltaic solar near2 (Cell device battery))	(US-PGPUB; USPAT; USOCR; FPRS; EPO; JPO; DERWENT; IBM_TDB)	OR	OFF	OFF	2012/03/15 01:28 PM
L123	18	"4989059"	(US-PGPUB; USPAT; USOCR; FPRS; EPO; JPO; DERWENT; IBM_TDB)	OR	OFF	OFF	2012/03/15 01:34 PM
L124	50	(polysilicon polycrystalline) near2 emitter and (photovoltaic solar near2 (Cell device battery))	(US-PGPUB; USPAT; USOCR; FPRS; EPO; JPO; DERWENT; IBM_TDB)	OR	OFF	OFF	2012/03/15 01:35 PM
L125	9	L124 not L122	(US-PGPUB; USPAT; USOCR; FPRS; EPO; JPO; DERWENT; IBM_TDB)	OR	OFF	OFF	2012/03/15 01:35 PM
L126	343	(polysilicon polycrystalline) same emitter and (photovoltaic solar near2 (Cell device battery))	(US-PGPUB; USPAT; USOCR; FPRS; EPO; JPO; DERWENT; IBM_TDB)	OR	OFF	OFF	2012/03/15 01:37 PM
L127	297	(polysilicon polycrystalline) same emitter and (photovoltaic solar near2 (Cell device battery)) and (dielectric oxide)	(US-PGPUB; USPAT; USOCR; FPRS; EPO; JPO; DERWENT; IBM_TDB)	OR	OFF	OFF	2012/03/15 01:37 PM
L128	347591	(polysilicon polycrystalline) wiith emitter and (photovoltaic solar near2 (Cell device battery)) and (dielectric oxide)	(US-PGPUB; USPAT; USOCR; FPRS; EPO; JPO; DERWENT; IBM_TDB)	OR	OFF	OFF	2012/03/15 01:37 PM
L129	128	(polysilicon polycrystalline) with emitter and (photovoltaic solar near2 (Cell device battery)) and (dielectric	(US-PGPUB; USPAT; USOCR; FPRS; EPO; JPO; DERWENT; IBM_TDB)	OR	OFF	OFF	2012/03/15 01:37 PM

		oxide)					
L130	86	L129 not L124	(US-PGPUB; USPAT; USOCR; FPRS; EPO; JPO; DERWENT; IBM_TDB)	OR	OFF	OFF	2012/03/15 01:38 PM
L131	2	"20090159111"	(US-PGPUB; USPAT; USOCR; FPRS; EPO; JPO; DERWENT; IBM_TDB)	OR	OFF	OFF	2012/03/15 01:43 PM
L132	6	"2008004791"	(US-PGPUB; USPAT; USOCR; FPRS; EPO; JPO; DERWENT; IBM_TDB)	OR	OFF	OFF	2012/03/15 01:46 PM
L133	10	"7468485"	(US-PGPUB; USPAT; USOCR; FPRS; EPO; JPO; DERWENT; IBM_TDB)	OR	OFF	OFF	2012/03/15 01:47 PM
L134	24	("3961997" | "4927770" | "5030295" | "5053083" | "5057439" | "5164019" | "5360990" | "5369291" | "5641362" | "6274402" | "6313395" | "6333457" | "6337283" | "6387726" | "6423568" | "6998288").PN. OR ("7468485").URPN.	(US-PGPUB; USPAT; USOCR)	OR	OFF	OFF	2012/03/15 01:49 PM
L135	14	"5057439"	(US-PGPUB; USPAT; USOCR)	OR	OFF	OFF	2012/03/15 01:55 PM
L136	1	"20090159111"	(US-PGPUB; USPAT; USOCR)	OR	OFF	OFF	2012/03/15 01:55 PM
L137	23	("4090213" | "4131486" | "4133698" | "4232245" | "4255211" | "4315097" | "4316049" | "4341918" | "4365262" | "4367368" | "4385198" | "4427839").PN. OR ("4665277").URPN.	(US-PGPUB; USPAT; USOCR)	OR	OFF	OFF	2012/03/15 01:58 PM
L138	0	L129 not L126	(US-PGPUB; USPAT; USOCR; FPRS; EPO; JPO; DERWENT; IBM_TDB)	OR	OFF	OFF	2012/03/15 02:03 PM
L139	215	L126 not L129	(US-PGPUB; USPAT; USOCR; FPRS; EPO; JPO; DERWENT; IBM_TDB)	OR	OFF	OFF	2012/03/15 02:03 PM
L140	74	emitter and (photovoltaic solar near2 (Cell device battery)) and tunnel near oxide	(US-PGPUB; USPAT; USOCR; FPRS; EPO; JPO; DERWENT; IBM_TDB)	OR	OFF	OFF	2012/03/15 02:04 PM
L141	75	emitter and (photovoltaic solar	(US-PGPUB; USPAT; USOCR; FPRS; EPO;	OR	OFF	OFF	2012/03/15 02:10 PM

		near2 (Cell device battery)) and tunnel$3 near oxide	JPO; DERWENT; IBM_TDB)				
L142	1	L141 not L140	(US-PGPUB; USPAT; USOCR; FPRS; EPO; JPO; DERWENT; IBM_TDB)	OR	OFF	OFF	2012/03/15 02:10 PM
L143	222	emitter and (photovoltaic solar near2 (Cell device battery)) and tunnel$3 near5 (oxide barrier)	(US-PGPUB; USPAT; USOCR; FPRS; EPO; JPO; DERWENT; IBM_TDB)	OR	OFF	OFF	2012/03/15 02:11 PM
L144	147	L143 not L141	(US-PGPUB; USPAT; USOCR; FPRS; EPO; JPO; DERWENT; IBM_TDB)	OR	OFF	OFF	2012/03/15 02:12 PM
L145	188	emitter and (photovoltaic solar near2 (Cell device battery)) and tunnel$3 near2 (oxide barrier)	(US-PGPUB; USPAT; USOCR; FPRS; EPO; JPO; DERWENT; IBM_TDB)	OR	OFF	OFF	2012/03/15 02:22 PM
L146	488	(photovoltaic solar near2 (Cell device battery)) and tunnel$3 near2 (oxide barrier)	(US-PGPUB; USPAT; USOCR; FPRS; EPO; JPO; DERWENT; IBM_TDB)	OR	OFF	OFF	2012/03/15 02:27 PM
L147	413	(photovoltaic solar near2 (Cell device battery)) and tunnel$3 near2 (oxide barrier) and silicon	(US-PGPUB; USPAT; USOCR; FPRS; EPO; JPO; DERWENT; IBM_TDB)	OR	OFF	OFF	2012/03/15 02:27 PM
L148	238	L147 not L145	(US-PGPUB; USPAT; USOCR; FPRS; EPO; JPO; DERWENT; IBM_TDB)	OR	OFF	OFF	2012/03/15 02:28 PM
L149	24	("3961997" | "4927770" | "5030295" | "5053083" | "5057439" | "5164019" | "5360990" | "5369291" | "5641362" | "6274402" | "6313395" | "6333457" | "6337283" | "6387726" | "6423568" | "6998288").PN. OR ("7468485").URPN.	(US-PGPUB; USPAT; USOCR)	OR	OFF	OFF	2012/03/15 02:32 PM
L150	0	Sah.in. and emittter	(US-PGPUB; USPAT; USOCR)	OR	OFF	OFF	2012/03/15 02:35 PM
L151	10	Sah.in. and emitter	(US-PGPUB; USPAT; USOCR)	OR	OFF	OFF	2012/03/15 02:35 PM
L152	23	("4090213" | "4131486" | "4133698" | "4232245" | "4255211" | "4315097" | "4316049" | "4341918" | "4365262" | "4367368" | "4385198" |	(US-PGPUB; USPAT; USOCR)	OR	OFF	OFF	2012/03/15 02:36 PM

		"4427839").PN. OR ("4665277").URPN.					
L153	4089	(photovoltaic solar near2 (Cell device battery)) and (passivat$4 near2 oxide dielectric) and silicon and (passivat$4 near2 oxide dielectric) with (reflect$4 metal)	(US-PGPUB; USPAT; USOCR; FPRS; EPO; JPO; DERWENT; IBM_TDB)	OR	OFF	OFF	2012/03/15 02:39 PM
L154	11442	(photovoltaic solar near2 (Cell device battery)) and (passivat$4 near2 oxide dielectric) and silicon	(US-PGPUB; USPAT; USOCR; FPRS; EPO; JPO; DERWENT; IBM_TDB)	OR	OFF	OFF	2012/03/15 02:39 PM
L155	11442	(photovoltaic solar near2 (Cell device battery)) and ((passivat$4 near2 oxide) dielectric) and silicon	(US-PGPUB; USPAT; USOCR; FPRS; EPO; JPO; DERWENT; IBM_TDB)	OR	OFF	OFF	2012/03/15 02:40 PM
L156	11276	(photovoltaic solar near (Cell battery)) and ((passivat$4 near2 oxide) dielectric) and silicon	(US-PGPUB; USPAT; USOCR; FPRS; EPO; JPO; DERWENT; IBM_TDB)	OR	OFF	OFF	2012/03/15 02:40 PM
L157	4063	(photovoltaic solar near (Cell battery)) and ((passivat$4 near2 oxide) dielectric) and silicon and (passivat$4 near2 oxide dielectric) with (reflect$4 metal)	(US-PGPUB; USPAT; USOCR; FPRS; EPO; JPO; DERWENT; IBM_TDB)	OR	OFF	OFF	2012/03/15 02:40 PM
L158	612	(photovoltaic solar near (Cell battery)) and ((passivat$4 near2 oxide) dielectric) and silicon and (passivat$4 near2 oxide dielectric) with (reflect$4 metal) and tunnel$3	(US-PGPUB; USPAT; USOCR; FPRS; EPO; JPO; DERWENT; IBM_TDB)	OR	OFF	OFF	2012/03/15 02:40 PM
L159	612	(photovoltaic solar near (Cell battery)) and ((passivat$4 near2 oxide) dielectric) and silicon and (passivat$4 near2 oxide dielectric) with (reflect$4 metal) and tunnel$3 and silicon	(US-PGPUB; USPAT; USOCR; FPRS; EPO; JPO; DERWENT; IBM_TDB)	OR	OFF	OFF	2012/03/15 02:40 PM
L160	301	(photovoltaic solar near (Cell battery)) and ((passivat$4 near2 oxide) dielectric) and silicon and (passivat$4	(US-PGPUB; USPAT; USOCR; FPRS; EPO; JPO; DERWENT; IBM_TDB)	OR	OFF	OFF	2012/03/15 02:41 PM

		near2 oxide dielectric) with (reflect$4 metal) and tunnel$3 and emitter					
L161	301	L160 not L148	(US-PGPUB; USPAT; USOCR; FPRS; EPO; JPO; DERWENT; IBM_TDB)	OR	OFF	OFF	2012/03/15 02:41 PM
L162	8	"5956571"	(US-PGPUB; USPAT; USOCR; FPRS; EPO; JPO; DERWENT; IBM_TDB)	OR	OFF	OFF	2012/03/15 02:57 PM
L163	58	"4200472"	(US-PGPUB; USPAT; USOCR; FPRS; EPO; JPO; DERWENT; IBM_TDB)	OR	OFF	OFF	2012/03/15 02:58 PM
L164	2	"20060130891"	(US-PGPUB; USPAT; USOCR; FPRS; EPO; JPO; DERWENT; IBM_TDB)	OR	OFF	OFF	2012/03/15 02:59 PM
L165	50	Borden.in. and emitter	(US-PGPUB; USPAT; USOCR; FPRS; EPO; JPO; DERWENT; IBM_TDB)	OR	OFF	OFF	2012/03/15 03:00 PM
L166	13	"5057439"	(USPAT)	OR	OFF	OFF	2012/03/16 07:33 AM
L167	0	"20090159111"	(USPAT)	OR	OFF	OFF	2012/03/16 07:36 AM
L168	2	"20090159111"	(US-PGPUB; USPAT; USOCR; FPRS; EPO; JPO; DERWENT; IBM_TDB)	OR	OFF	OFF	2012/03/16 07:36 AM
L169	2	"20050268963"	(US-PGPUB; USPAT; USOCR; FPRS; EPO; JPO; DERWENT; IBM_TDB)	OR	OFF	OFF	2012/03/16 07:38 AM
L170	24	("3961997" | "4927770" | "5030295" | "5053083" | "5057439" | "5164019" | "5360990" | "5369291" | "5641362" | "6274402" | "6313395" | "6333457" | "6337283" | "6387726" | "6423568" | "6998288").PN. OR ("7468485").URPN.	(US-PGPUB; USPAT; USOCR)	OR	OFF	OFF	2012/03/16 07:45 AM
L171	14	("4403392" | "4502206").PN. OR ("5057439").URPN.	(US-PGPUB; USPAT; USOCR)	OR	OFF	OFF	2012/03/16 07:47 AM
L172	1	"20060096635"	(US-PGPUB; USPAT; USOCR)	OR	OFF	OFF	2012/03/16 07:49 AM
L173	1	"20090159111"	(US-PGPUB; USPAT; USOCR)	OR	OFF	OFF	2012/03/16 07:49 AM

L174	1	"20050268963"	(US-PGPUB; USPAT; USOCR)	OR	OFF	OFF	2012/03/16 07:54 AM
L175	114	polysilicon near emitter and native near oxide	(US-PGPUB; USPAT; USOCR)	OR	OFF	OFF	2012/03/16 08:12 AM
L176	2	polysilicon near emitter and native near oxide and (photovoltaic and solar near2 (battery cell device))	(US-PGPUB; USPAT; USOCR)	OR	OFF	OFF	2012/03/16 08:13 AM
L177	367	polysilicon near emitter and "SiO.sub.2"	(US-PGPUB; USPAT; USOCR)	OR	OFF	OFF	2012/03/16 08:14 AM
L178	2	polysilicon near emitter and "SiO.sub.2" and (photovoltaic and solar near2 (battery cell device))	(US-PGPUB; USPAT; USOCR)	OR	OFF	OFF	2012/03/16 08:15 AM
L179	6	Borden.in. and polysilicon near emitter	(US-PGPUB; USPAT; USOCR)	OR	OFF	OFF	2012/03/16 08:15 AM
L180	10	polysilicon near emitter and (photovoltaic and solar near2 (battery cell device))	(US-PGPUB; USPAT; USOCR)	OR	OFF	OFF	2012/03/16 08:17 AM
L181	17	(polycyrstalline multicrystalline polysilicon) near2 emitter and (photovoltaic and solar near2 (battery cell device))	(US-PGPUB; USPAT; USOCR)	OR	OFF	OFF	2012/03/16 08:19 AM
L182	0	"2008004791"	(US-PGPUB; USPAT; USOCR)	OR	OFF	OFF	2012/03/16 08:27 AM
L183	2	"20080004791"	(US-PGPUB; USPAT; USOCR)	OR	OFF	OFF	2012/03/16 08:28 AM
L184	0	"2008004791"	(US-PGPUB; USPAT; USOCR)	OR	OFF	OFF	2012/03/16 08:28 AM
L185	6	"2008004791"	(US-PGPUB; USPAT; USOCR; FPRS; EPO; JPO; DERWENT; IBM_TDB)	OR	OFF	OFF	2012/03/16 08:28 AM
L186	3869	438/72.ccls. 438/57.ccls. 438/69.ccls. 438/97.ccls. 438/98.ccls. 257/461.ccls. 257/436.ccls.	(USPAT)	OR	OFF	OFF	2012/03/19 08:37 AM
L187	7338	438/72.ccls. 438/57.ccls. 438/69.ccls. 438/97.ccls. 438/98.ccls. 257/461.ccls. 257/436.ccls.	(US-PGPUB; USPAT; USOCR; FPRS; EPO; JPO; DERWENT; IBM_TDB)	OR	OFF	OFF	2012/03/19 08:37 AM

L188	552	L187 and emitter and (photovoltaic solar near (cell device battery))	(US-PGPUB; USPAT; USOCR; FPRS; EPO; JPO; DERWENT; IBM_TDB)	OR	OFF	OFF	2012/03/19 08:37 AM
L189	426	L188 and oxide	(US-PGPUB; USPAT; USOCR; FPRS; EPO; JPO; DERWENT; IBM_TDB)	OR	OFF	OFF	2012/03/19 08:38 AM
L190	39	L188 and oxide and polysilicon	(US-PGPUB; USPAT; USOCR; FPRS; EPO; JPO; DERWENT; IBM_TDB)	OR	OFF	OFF	2012/03/19 08:38 AM
L191	419	L188 and oxide and silicon	(US-PGPUB; USPAT; USOCR; FPRS; EPO; JPO; DERWENT; IBM_TDB)	OR	OFF	OFF	2012/03/19 08:45 AM
L192	237	L188 and oxide and (light near incident front) near5 (contact wir$4 connect$4)	(US-PGPUB; USPAT; USOCR; FPRS; EPO; JPO; DERWENT; IBM_TDB)	OR	OFF	OFF	2012/03/19 08:46 AM
L193	12	L188 and oxide and (light near incident front) near5 (contact wir$4 connect$4) and tunnel$3 near5 oxide	(US-PGPUB; USPAT; USOCR; FPRS; EPO; JPO; DERWENT; IBM_TDB)	OR	OFF	OFF	2012/03/19 08:53 AM
L194	2	"12707042"	(US-PGPUB; USPAT; USOCR; FPRS; EPO; JPO; DERWENT; IBM_TDB)	OR	OFF	OFF	2013/09/11 10:10 AM
L195	16	"1270742"	(US-PGPUB; USPAT; USOCR; FPRS; EPO; JPO; DERWENT; IBM_TDB)	OR	OFF	OFF	2013/09/11 10:10 AM
L196	2	"12070742"	(US-PGPUB; USPAT; USOCR; FPRS; EPO; JPO; DERWENT; IBM_TDB)	OR	OFF	OFF	2013/09/11 10:10 AM
L197	31	("20030134469" | "20040200520" | "20050268963" | "20060130891" | "20060157103" | "20070082206" | "3961997" | "4427839" | "4665277" | "4927770" | "5030295" | "5053083" | "5057439" | "5164019" | "5217539" | "5266125" | "5360990" | "5369291" | "5449626" | "5479018" | "5641362" | "6262359" | "6274402" | "6313395" | "6333457" | "6337283" | "6387726" | "6423568" | "6524880" | "6998288" |	(US-PGPUB; USPAT; USOCR)	OR	ON	ON	2013/09/11 10:11 AM

		"7135350").PN. OR ("8222516").URPN.					
L198	1	"20040055894"	(US-PGPUB; USPAT; USOCR)	OR	ON	ON	2013/09/11 10:26 AM
L199	2	"11915984"	(US-PGPUB; USPAT; USOCR)	OR	ON	ON	2013/09/11 10:26 AM
L200	2	"20090159111"	(US-PGPUB; USPAT; USOCR; FPRS; EPO; JPO; DERWENT; IBM_TDB)	OR	ON	ON	2013/09/11 10:32 AM
L201	42	("3961997" | "4927770" | "5030295" | "5053083" | "5057439" | "5164019" | "5360990" | "5369291" | "5641362" | "6274402" | "6313395" | "6333457" | "6337283" | "6387726" | "6423568" | "6998288").PN. OR ("7468485").URPN.	(US-PGPUB; USPAT; USOCR)	OR	ON	ON	2013/09/11 10:35 AM
L202	26	"5057439"	(US-PGPUB; USPAT; USOCR)	OR	ON	ON	2013/09/11 10:41 AM
L203	26	("4403392" | "4502206").PN. OR ("5057439").URPN.	(US-PGPUB; USPAT; USOCR)	OR	ON	ON	2013/09/11 10:42 AM
L204	1	"12983846"	(US-PGPUB; USPAT; USOCR)	OR	ON	ON	2013/09/11 10:50 AM
L205	33	polysilicon near emitter and (solar photovoltaic).ab.	(US-PGPUB; USPAT; USOCR; FPRS; EPO; JPO; DERWENT; IBM_TDB)	OR	ON	ON	2013/09/11 10:51 AM
L206	3	"7468482"	(US-PGPUB; USPAT; USOCR; FPRS; EPO; JPO; DERWENT; IBM_TDB)	OR	ON	ON	2013/09/11 10:54 AM
L207	30	"7468485"	(US-PGPUB; USPAT; USOCR; FPRS; EPO; JPO; DERWENT; IBM_TDB)	OR	ON	ON	2013/09/11 10:54 AM
L208	2	"20090288704"	(US-PGPUB; USPAT; USOCR; FPRS; EPO; JPO; DERWENT; IBM_TDB)	OR	ON	ON	2013/09/11 11:01 AM
L209	1	2009-P84539.NRAN.	(DERWENT)	OR	ON	ON	2013/09/11 11:01 AM
L210	3	"20070256728"	(US-PGPUB; USPAT; USOCR; FPRS; EPO; JPO; DERWENT; IBM_TDB)	OR	ON	ON	2013/09/11 11:03 AM
L211	2074	polysilicon near emitter	(US-PGPUB; USPAT; USOCR; FPRS; EPO; JPO; DERWENT; IBM_TDB)	OR	ON	ON	2013/09/11 11:08 AM

L212	55	polysilicon near emitter and (solar photovoltaic)	(US-PGPUB; USPAT; USOCR; FPRS; EPO; JPO; DERWENT; IBM_TDB)	OR	ON	ON	2013/09/11 11:08 AM
L213	72	polysilicon near5 emitter and (solar photovoltaic)	(US-PGPUB; USPAT; USOCR; FPRS; EPO; JPO; DERWENT; IBM_TDB)	OR	ON	ON	2013/09/11 11:14 AM
L214	17	L213 not L212	(US-PGPUB; USPAT; USOCR; FPRS; EPO; JPO; DERWENT; IBM_TDB)	OR	ON	ON	2013/09/11 11:14 AM
L215	6	"2008004791"	(US-PGPUB; USPAT; USOCR; FPRS; EPO; JPO; DERWENT; IBM_TDB)	OR	ON	ON	2013/09/11 11:15 AM
L216	24	(polycyrstalline multicrystalline polysilicon) near2 emitter and (photovoltaic and solar near2 (battery cell device))	(US-PGPUB; USPAT; USOCR)	OR	OFF	OFF	2013/09/11 11:17 AM
L217	4	lindholm.in. and solar near cell	(US-PGPUB; USPAT; USOCR; FPRS; EPO; JPO; DERWENT; IBM_TDB)	OR	ON	ON	2013/09/11 11:54 AM
L218	0	lindholm.in. and "136."	(US-PGPUB; USPAT; USOCR; FPRS; EPO; JPO; DERWENT; IBM_TDB)	OR	ON	ON	2013/09/11 11:56 AM
L219	3	lindholm.in. and "136".clas.	(US-PGPUB; USPAT; USOCR; FPRS; EPO; JPO; DERWENT; IBM_TDB)	OR	ON	ON	2013/09/11 11:56 AM
L220	2	polysilicon near solar same emitter	(US-PGPUB; USPAT; USOCR; FPRS; EPO; JPO; DERWENT; IBM_TDB)	OR	ON	ON	2013/09/11 11:59 AM
L221	20	("3900943" | "4062038" | "4171997" | "4197141" | "4219368" | "4230508" | "4249957" | "4278473" | "4283589" | "4320168" | "4366338").PN. OR ("4431858").URPN.	(US-PGPUB; USPAT; USOCR)	OR	ON	ON	2013/09/11 12:00 PM
L222	6	("20030183270" | "20090255574" | "20090283138" | "3969163" | "4431858" | "4571448").PN. OR ("8283557").URPN.	(US-PGPUB; USPAT; USOCR)	OR	ON	ON	2013/09/11 12:02 PM
L223	26	("4403392" | "4502206").PN. OR	(US-PGPUB; USPAT; USOCR)	OR	ON	ON	2013/09/11 01:29 PM

		("5057439").URPN.					
L224	2	"12166266"	(US-PGPUB; USPAT; USOCR; FPRS; EPO; JPO; DERWENT; IBM_TDB)	OR	ON	ON	2013/09/11 01:43 PM
L225	395	polysilicon near5 emitter same oxide same dopant	(US-PGPUB; USPAT; USOCR; FPRS; EPO; JPO; DERWENT; IBM_TDB)	OR	ON	ON	2013/09/11 01:45 PM
L226	377	polysilicon near5 emitter same oxide with dop$3	(US-PGPUB; USPAT; USOCR; FPRS; EPO; JPO; DERWENT; IBM_TDB)	OR	ON	ON	2013/09/11 01:45 PM
L227	26	polysilicon near5 emitter same oxide with dop$3 same phosphorus	(US-PGPUB; USPAT; USOCR; FPRS; EPO; JPO; DERWENT; IBM_TDB)	OR	ON	ON	2013/09/11 01:45 PM
L228	6	"11201817"	(US-PGPUB; USPAT; USOCR; FPRS; EPO; JPO; DERWENT; IBM_TDB)	OR	ON	ON	2013/09/11 01:48 PM
L229	53	Swanson near Richard and solar near cell	(US-PGPUB; USPAT; USOCR; FPRS; EPO; JPO; DERWENT; IBM_TDB)	OR	ON	ON	2013/09/11 01:52 PM
L230	158	"5053083"	(US-PGPUB; USPAT; USOCR; FPRS; EPO; JPO; DERWENT; IBM_TDB)	OR	ON	ON	2013/09/11 01:53 PM
L231	38	("20040200520" | "4234352" | "4478879" | "4920639" | "4927770" | "5053083" | "5320684" | "5538564" | "5641362" | "6624737").PN. OR ("7339110").URPN.	(US-PGPUB; USPAT; USOCR)	OR	ON	ON	2013/09/11 02:03 PM
L232	687	phosphosilicate near glass same (dielectric oxide) with (passivation capping)	(US-PGPUB; USPAT; USOCR)	OR	ON	ON	2013/09/11 02:14 PM
L233	41	phosphosilicate near glass same (dielectric oxide) with (passivation capping) same polysilicon	(US-PGPUB; USPAT; USOCR)	OR	ON	ON	2013/09/11 02:15 PM
L234	0	"2008004791"	(US-PGPUB; USPAT; USOCR)	OR	ON	ON	2013/09/11 02:17 PM
L235	2	"20080004791"	(US-PGPUB; USPAT; USOCR)	OR	ON	ON	2013/09/11 02:17 PM
L236	59	"5693578"	(US-PGPUB; USPAT; USOCR)	OR	ON	ON	2013/09/11 02:17 PM
L237	11	(back near surface near field BSF) same	(US-PGPUB; USPAT; USOCR)	OR	ON	ON	2013/09/11 02:19 PM

		polysilicon					
L238	14	(back near surface near field BSF) same polysilicon	(US-PGPUB; USPAT; USOCR; FPRS; EPO; JPO; DERWENT; IBM_TDB)	OR	ON	ON	2013/09/11 02:21 PM
L239	3	L238 not L237	(US-PGPUB; USPAT; USOCR; FPRS; EPO; JPO; DERWENT; IBM_TDB)	OR	ON	ON	2013/09/11 02:21 PM
L240	81	(back near surface near field BSF) same polycrystalline near silicon	(US-PGPUB; USPAT; USOCR; FPRS; EPO; JPO; DERWENT; IBM_TDB)	OR	ON	ON	2013/09/11 02:23 PM
L241	81	L240 not L238	(US-PGPUB; USPAT; USOCR; FPRS; EPO; JPO; DERWENT; IBM_TDB)	OR	ON	ON	2013/09/11 02:23 PM
L242	157	(back near surface near field BSF) and polysilicon	(US-PGPUB; USPAT; USOCR; FPRS; EPO; JPO; DERWENT; IBM_TDB)	OR	ON	ON	2013/09/11 02:35 PM
L243	143	L242 not L238	(US-PGPUB; USPAT; USOCR; FPRS; EPO; JPO; DERWENT; IBM_TDB)	OR	ON	ON	2013/09/11 02:35 PM
L244	476	(back near surface near field BSF) same passivat$4 and (solar photovoltaic).ab.	(US-PGPUB; USPAT; USOCR; FPRS; EPO; JPO; DERWENT; IBM_TDB)	OR	ON	ON	2013/09/11 02:45 PM
L245	108	(back near surface near field BSF) same passivat$4 and (solar photovoltaic).ab. and heterojunction	(US-PGPUB; USPAT; USOCR; FPRS; EPO; JPO; DERWENT; IBM_TDB)	OR	ON	ON	2013/09/11 02:45 PM
L246	26	"4315097"	(US-PGPUB; USPAT; USOCR; FPRS; EPO; JPO; DERWENT; IBM_TDB)	OR	ON	ON	2013/09/11 03:00 PM
L247	2	"20040205520"	(US-PGPUB; USPAT; USOCR; FPRS; EPO; JPO; DERWENT; IBM_TDB)	OR	ON	ON	2013/09/11 03:02 PM
L248	3	"20040200520"	(US-PGPUB; USPAT; USOCR; FPRS; EPO; JPO; DERWENT; IBM_TDB)	OR	ON	ON	2013/09/11 03:02 PM
L249	25	(back near surface near field BSF) same passivat$4 and (solar photovoltaic).ab. and polysilicon	(US-PGPUB; USPAT; USOCR; FPRS; EPO; JPO; DERWENT; IBM_TDB)	OR	ON	ON	2013/09/11 03:09 PM
L250	717	(back near surface near field BSF) same	(US-PGPUB; USPAT; USOCR; FPRS; EPO;	OR	ON	ON	2013/09/11 03:10 PM

		(capping oxide dielectric passivat$4) and (solar photovoltaic).ab.	JPO; DERWENT; IBM_TDB)				
L251	75	(back near surface near field BSF) same (capping oxide dielectric passivat$4) and (solar photovoltaic).ab. and Phosphosilicate	(US-PGPUB; USPAT; USOCR; FPRS; EPO; JPO; DERWENT; IBM_TDB)	OR	ON	ON	2013/09/11 03:11 PM
L252	114	(back near surface near field BSF) same (capping oxide dielectric passivat$4) and (solar photovoltaic).ab. and (Phosphosilicate PSG)	(US-PGPUB; USPAT; USOCR; FPRS; EPO; JPO; DERWENT; IBM_TDB)	OR	ON	ON	2013/09/11 03:16 PM
L253	39	L252 not L251	(US-PGPUB; USPAT; USOCR; FPRS; EPO; JPO; DERWENT; IBM_TDB)	OR	ON	ON	2013/09/11 03:16 PM
L254	158	(back near surface near field BSF) same (capping oxide dielectric passivat$4) and (Phosphosilicate PSG)	(US-PGPUB; USPAT; USOCR; FPRS; EPO; JPO; DERWENT; IBM_TDB)	OR	ON	ON	2013/09/11 03:18 PM
L255	44	L254 not L252	(US-PGPUB; USPAT; USOCR; FPRS; EPO; JPO; DERWENT; IBM_TDB)	OR	ON	ON	2013/09/11 03:18 PM
L256	1163	(back near surface near field BSF) same (capping oxide dielectric passivat$4)	(US-PGPUB; USPAT; USOCR; FPRS; EPO; JPO; DERWENT; IBM_TDB)	OR	ON	ON	2013/09/11 03:20 PM
L257	727	(back near surface near field BSF) same (capping oxide dielectric passivat$4) and (solar photovoltaic photoelectric).ab.	(US-PGPUB; USPAT; USOCR; FPRS; EPO; JPO; DERWENT; IBM_TDB)	OR	ON	ON	2013/09/11 03:21 PM
L258	33	(back near surface near field BSF) same (capping oxide dielectric passivat$4) and (solar photovoltaic photoelectric).ab. and polysilicon	(US-PGPUB; USPAT; USOCR; FPRS; EPO; JPO; DERWENT; IBM_TDB)	OR	ON	ON	2013/09/11 03:21 PM
L259	703	polysilicon with PSG with (dielectric oxide)	(US-PGPUB; USPAT; USOCR; FPRS; EPO; JPO; DERWENT; IBM_TDB)	OR	ON	ON	2013/09/11 03:30 PM
L260	81	polysilicon with PSG with (dielectric oxide) and emitter	(US-PGPUB; USPAT; USOCR; FPRS; EPO; JPO; DERWENT; IBM_TDB)	OR	ON	ON	2013/09/11 03:31 PM
L261	225	polysilicon with PSG	(US-PGPUB; USPAT;	OR	ON	ON	2013/09/11

		with (dielectric oxide) same dop$3	USOCR; FPRS; EPO; JPO; DERWENT; IBM_TDB)				03:33 PM
L262	2	polysilicon with PSG with (dielectric oxide) same dop$3 and (solar photovoltaic)	(US-PGPUB; USPAT; USOCR; FPRS; EPO; JPO; DERWENT; IBM_TDB)	OR	ON	ON	2013/09/11 03:34 PM
L263	44	polysilicon with PSG with (dielectric oxide) and (solar photovoltaic)	(US-PGPUB; USPAT; USOCR; FPRS; EPO; JPO; DERWENT; IBM_TDB)	OR	ON	ON	2013/09/11 03:34 PM
L264	161	(phosphosilicate PSG) with (dielectric oxide) same dop$4 and (solar photovoltaic)	(US-PGPUB; USPAT; USOCR; FPRS; EPO; JPO; DERWENT; IBM_TDB)	OR	ON	ON	2013/09/11 03:35 PM
L265	62	(phosphosilicate PSG) with (dielectric oxide) same dop$4 and (solar photovoltaic).ab.	(US-PGPUB; USPAT; USOCR; FPRS; EPO; JPO; DERWENT; IBM_TDB)	OR	ON	ON	2013/09/11 03:35 PM
L266	103	(phosphosilicate PSG borosilicate BSG) with (dielectric oxide) same dop$4 and (solar photovoltaic).ab.	(US-PGPUB; USPAT; USOCR; FPRS; EPO; JPO; DERWENT; IBM_TDB)	OR	ON	ON	2013/09/11 03:42 PM
L267	41	L266 not L265	(US-PGPUB; USPAT; USOCR; FPRS; EPO; JPO; DERWENT; IBM_TDB)	OR	ON	ON	2013/09/11 03:42 PM
L268	2	"20080173347"	(US-PGPUB; USPAT; USOCR; FPRS; EPO; JPO; DERWENT; IBM_TDB)	OR	ON	ON	2013/09/11 03:43 PM
L269	3	"20060196535"	(US-PGPUB; USPAT; USOCR; FPRS; EPO; JPO; DERWENT; IBM_TDB)	OR	ON	ON	2013/09/11 03:45 PM
L270	179	"4927770"	(US-PGPUB; USPAT; USOCR; FPRS; EPO; JPO; DERWENT; IBM_TDB)	OR	ON	ON	2013/09/11 03:46 PM
L271	57	(phosphosilicate PSG borosilicate BSG) with (dielectric oxide cap$4) same dop$4 and (back near surface near field BSF)	(US-PGPUB; USPAT; USOCR; FPRS; EPO; JPO; DERWENT; IBM_TDB)	OR	ON	ON	2013/09/11 03:50 PM
L272	145	(phosphosilicate PSG borosilicate BSG) with (dielectric oxide cap$4) and (back near surface near field BSF)	(US-PGPUB; USPAT; USOCR; FPRS; EPO; JPO; DERWENT; IBM_TDB)	OR	ON	ON	2013/09/11 03:52 PM
L273	0	L271 not L271	(US-PGPUB; USPAT; USOCR; FPRS; EPO; JPO; DERWENT;	OR	ON	ON	2013/09/11 03:52 PM

			IBM_TDB)				
L274	88	L272 not L271	(US-PGPUB; USPAT; USOCR; FPRS; EPO; JPO; DERWENT; IBM_TDB)	OR	ON	ON	2013/09/11 03:53 PM
L275	190	(phosphosilicate PSG borosilicate BSG) with (dielectric oxide cap$4) with (dop$4) with (burn$4 escap$4 leav$4 diffus$4)	(US-PGPUB; USPAT; USOCR; FPRS; EPO; JPO; DERWENT; IBM_TDB)	OR	ON	ON	2013/09/12 07:22 AM
L276	130	(phosphosilicate PSG borosilicate BSG) with (dielectric "SiO.sub.2" silicon near oxide cap$4) with (dop$4) with (burn$4 escap$4 leav$4 diffus$4)	(US-PGPUB; USPAT; USOCR; FPRS; EPO; JPO; DERWENT; IBM_TDB)	OR	ON	ON	2013/09/12 07:28 AM
L277	341	(phosphosilicate PSG borosilicate BSG) with (dielectric "SiO.sub.2" silicon near oxide cap$4) and (solar photoelectric photovoltaic).ab.	(US-PGPUB; USPAT; USOCR; FPRS; EPO; JPO; DERWENT; IBM_TDB)	OR	ON	ON	2013/09/12 07:39 AM
L278	14	(phosphosilicate PSG borosilicate BSG) with (dielectric "SiO.sub.2" silicon near oxide cap$4) with (dop$4) with (burn$4 escap$4 leav$4 diffus$4) and (solar photoelectric photovoltaic).ab.	(US-PGPUB; USPAT; USOCR; FPRS; EPO; JPO; DERWENT; IBM_TDB)	OR	ON	ON	2013/09/12 07:42 AM
L279	23	(phosphosilicate PSG borosilicate BSG) with (dielectric "SiO.sub.2" silicon near oxide cap$4) with (dop$4) with (burn$4 escap$4 leav$4 diffus$4) and (solar photoelectric photovoltaic)	(US-PGPUB; USPAT; USOCR; FPRS; EPO; JPO; DERWENT; IBM_TDB)	OR	ON	ON	2013/09/12 07:44 AM
L280	18	(phosphosilicate PSG borosilicate BSG) with (cap$4) with (dop$4) and (solar photoelectric photovoltaic)	(US-PGPUB; USPAT; USOCR; FPRS; EPO; JPO; DERWENT; IBM_TDB)	OR	ON	ON	2013/09/12 07:46 AM
L281	35	("3895975" | "4056879" | "4106047" | "4131486" | "4226017" | "4916503" | "5538564" | "5641362" | "5951742" | "5973260" | "6071753").PN. OR ("6262359").URPN.	(US-PGPUB; USPAT; USOCR)	OR	ON	ON	2013/09/12 09:04 AM

L282	6	(oxide with tunnel) same (pn near junction) and (solar photovoltaic).ab.	(US-PGPUB; USPAT; USOCR; FPRS; EPO; JPO; DERWENT; IBM_TDB)	OR	ON	ON	2013/09/12 09:08 AM
L283	6	(oxide with tunnel$5) same (pn near junction) and (solar photovoltaic).ab.	(US-PGPUB; USPAT; USOCR; FPRS; EPO; JPO; DERWENT; IBM_TDB)	OR	ON	ON	2013/09/12 09:10 AM
L284	86	(oxide with tunnel$5) same (junction) and (solar photovoltaic).ab.	(US-PGPUB; USPAT; USOCR; FPRS; EPO; JPO; DERWENT; IBM_TDB)	OR	ON	ON	2013/09/12 09:10 AM
L285	80	L284 not L283	(US-PGPUB; USPAT; USOCR; FPRS; EPO; JPO; DERWENT; IBM_TDB)	OR	ON	ON	2013/09/12 09:10 AM
L286	3	"20070256728"	(US-PGPUB; USPAT; USOCR; FPRS; EPO; JPO; DERWENT; IBM_TDB)	OR	ON	ON	2013/09/12 09:12 AM
L287	52	"4272641"	(US-PGPUB; USPAT; USOCR; FPRS; EPO; JPO; DERWENT; IBM_TDB)	OR	ON	ON	2013/09/12 09:14 AM
L288	211	(oxide with tunnel$5) and (solar photovoltaic).ab.	(US-PGPUB; USPAT; USOCR; FPRS; EPO; JPO; DERWENT; IBM_TDB)	OR	ON	ON	2013/09/12 09:15 AM
L289	88	thin same (oxide with tunnel$5) and (solar photovoltaic).ab.	(US-PGPUB; USPAT; USOCR; FPRS; EPO; JPO; DERWENT; IBM_TDB)	OR	ON	ON	2013/09/12 09:15 AM
L290	87	L289 not L287	(US-PGPUB; USPAT; USOCR; FPRS; EPO; JPO; DERWENT; IBM_TDB)	OR	ON	ON	2013/09/12 09:15 AM
L291	1100	(oxide with tunnel$5) and (solar photovoltaic photoelectric)	(US-PGPUB; USPAT; USOCR; FPRS; EPO; JPO; DERWENT; IBM_TDB)	OR	ON	ON	2013/09/12 09:22 AM
L292	301	(oxide with tunnel$5) same (pn junction p-type n-type) and (solar photovoltaic photoelectric)	(US-PGPUB; USPAT; USOCR; FPRS; EPO; JPO; DERWENT; IBM_TDB)	OR	ON	ON	2013/09/12 09:24 AM
L293	243	(L292 not L289)	(US-PGPUB; USPAT; USOCR; FPRS; EPO; JPO; DERWENT; IBM_TDB)	OR	ON	ON	2013/09/12 09:24 AM
L294	7	"4495375"	(US-PGPUB; USPAT; USOCR; FPRS; EPO; JPO; DERWENT; IBM_TDB)	OR	ON	ON	2013/09/12 09:31 AM

L295	6	("3990097" | "4338482").PN. OR ("4495375").URPN.	(US-PGPUB; USPAT; USOCR)	OR	ON	ON	2013/09/12 09:31 AM
L296	24	("3559281" | "4013485" | "4062102" | "4253881" | "4403239" | "4404421" | "4404422" | "4495375" | "4640002" | "4806496" | "4828628").PN. OR ("4891325").URPN.	(US-PGPUB; USPAT; USOCR)	OR	ON	ON	2013/09/12 09:32 AM
L297	60	"6998288"	(US-PGPUB; USPAT; USOCR; FPRS; EPO; JPO; DERWENT; IBM_TDB)	OR	ON	ON	2013/09/12 09:41 AM
L298	53	("20040200520" | "4927770" | "5053083" | "5164019" | "5217539" | "5360990" | "5369291" | "6274402" | "6313395" | "6333457" | "6337283" | "6387726" | "6423568").PN. OR ("6998288").URPN.	(US-PGPUB; USPAT; USOCR)	OR	ON	ON	2013/09/12 09:55 AM
L299	23	Sunpower.as. and oxide.clm.	(US-PGPUB; USPAT; USOCR; FPRS; EPO; JPO; DERWENT; IBM_TDB)	OR	ON	ON	2013/09/12 10:35 AM
L300	5	"12070742"	(US-PGPUB; USPAT; USOCR)	OR	OFF	OFF	2016/06/08 09:05 AM
L301	5181	tunneling near2 oxide	(US-PGPUB; USPAT; USOCR)	OR	OFF	OFF	2016/06/08 09:19 AM
L302	205	tunnel$4 near2 oxide and (solar photovoltaic) and (rear$4 back$4) near2 (electrode contact) and (passivat$4 anti?reflect$4 ARC)	(US-PGPUB; USPAT; USOCR)	OR	OFF	OFF	2016/06/08 09:20 AM
L303	210	tunnel$4 near2 oxide and (solar photovoltaic) and (rear$4 back$4) near2 (electrode contact) and (passivat$4 anti?reflect$4 ARC)	(US-PGPUB; USPAT; USOCR; FPRS; EPO; JPO; DERWENT; IBM_TDB)	OR	OFF	OFF	2016/06/08 09:29 AM
L304	5	L303 not L302	(US-PGPUB; USPAT; USOCR; FPRS; EPO; JPO; DERWENT; IBM_TDB)	OR	OFF	OFF	2016/06/08 09:29 AM
L305	238	(heterojunction) and (solar photovoltaic) and (rear$4 back$4) near2 (electrode contact) and (passivat$4	(US-PGPUB; USPAT; USOCR; FPRS; EPO; JPO; DERWENT; IBM_TDB)	OR	OFF	OFF	2016/06/08 09:31 AM

		anti?reflect$4 ARC) and (polysilicon polycrystalline) same (wafer monocrystalline)					
L306	99	"7468485"	(US-PGPUB; USPAT; USOCR; FPRS; EPO; JPO; DERWENT; IBM_TDB)	OR	OFF	OFF	2016/06/08 09:46 AM
L307	66	"6262359"	(US-PGPUB; USPAT; USOCR; FPRS; EPO; JPO; DERWENT; IBM_TDB)	OR	OFF	OFF	2016/06/08 09:49 AM
L308	421	(heterojunction) and (solar photovoltaic) and (passivat$4 anti?reflect$4 ARC) and (polysilicon polycrystalline) same (wafer monocrystalline)	(US-PGPUB; USPAT; USOCR; FPRS; EPO; JPO; DERWENT; IBM_TDB)	OR	OFF	OFF	2016/06/08 10:20 AM
L309	183	L308 not L305	(US-PGPUB; USPAT; USOCR; FPRS; EPO; JPO; DERWENT; IBM_TDB)	OR	OFF	OFF	2016/06/08 10:21 AM
L310	49	"5030295"	(US-PGPUB; USPAT; USOCR; FPRS; EPO; JPO; DERWENT; IBM_TDB)	OR	OFF	OFF	2016/06/08 10:23 AM
L311	129	("4602120" | "4675468" | "4703553" | "4726850" | "4781766" | "4824489" | "5030295" | "5053083" | "5346850").PN. OR ("5538564").URPN.	(US-PGPUB; USPAT; USOCR)	OR	ON	ON	2016/06/08 10:25 AM
L312	248	tunnel$4 near2 oxide and (solar photovoltaic) and (rear$4 back$4) near2 (electrode contact)	(US-PGPUB; USPAT; USOCR; FPRS; EPO; JPO; DERWENT; IBM_TDB)	OR	OFF	OFF	2016/06/08 10:43 AM
L313	199	tunnel$4 near2 oxide and (solar photovoltaic) and (polysilicon polycrystalline) same (wafer monocrystalline)	(US-PGPUB; USPAT; USOCR; FPRS; EPO; JPO; DERWENT; IBM_TDB)	OR	OFF	OFF	2016/06/08 10:44 AM
L314	105	L313 not L302	(US-PGPUB; USPAT; USOCR; FPRS; EPO; JPO; DERWENT; IBM_TDB)	OR	OFF	OFF	2016/06/08 10:44 AM
L315	516	(solar photovoltaic) and (polysilicon polycrystalline) with emitter	(US-PGPUB; USPAT; USOCR; FPRS; EPO; JPO; DERWENT; IBM_TDB)	OR	OFF	OFF	2016/06/08 10:48 AM
L316	115	(solar photovoltaic) and (polysilicon polycrystalline) with	(US-PGPUB; USPAT; USOCR; FPRS; EPO; JPO; DERWENT;	OR	OFF	OFF	2016/06/08 10:49 AM

		emitter and heterojunction	IBM_TDB)				
L317	635	(solar photovoltaic) and (polysilicon polycrystalline multicrystalline silicon) with emitter and heterojunction	(US-PGPUB; USPAT; USOCR; FPRS; EPO; JPO; DERWENT; IBM_TDB)	OR	OFF	OFF	2016/06/08 10:59 AM
L318	442	(solar photovoltaic) and (polysilicon polycrystalline multicrystalline silicon Si) with emitter and heterojunction and (polysilicon polycrystalline multicrystalline)	(US-PGPUB; USPAT; USOCR; FPRS; EPO; JPO; DERWENT; IBM_TDB)	OR	OFF	OFF	2016/06/08 10:59 AM
L319	327	L318 not L316	(US-PGPUB; USPAT; USOCR; FPRS; EPO; JPO; DERWENT; IBM_TDB)	OR	OFF	OFF	2016/06/08 11:00 AM
L320	51	("4403392" | "4502206").PN. OR ("5057439").URPN.	(US-PGPUB; USPAT; USOCR)	OR	ON	ON	2016/06/08 11:09 AM
L321	8	("20030089393" | "20060255340" | "20060263642" | "4703553" | "5011565" | "5057439" | "6403877" | "7858430").PN. OR ("8207443").URPN.	(US-PGPUB; USPAT; USOCR)	OR	ON	ON	2016/06/08 11:12 AM
L322	34	"5030295"	(US-PGPUB; USPAT; USOCR)	OR	ON	ON	2016/06/08 11:16 AM
L323	1803	tunnel$4 and (solar photovoltaic) and heterojunction	(US-PGPUB; USPAT; USOCR; FPRS; EPO; JPO; DERWENT; IBM_TDB)	OR	OFF	OFF	2016/06/08 11:20 AM
L324	380	tunnel$4 and (solar photovoltaic) and heterojunction and emitter and heterojunction and (polysilicon polycrystalline multicrystalline)	(US-PGPUB; USPAT; USOCR; FPRS; EPO; JPO; DERWENT; IBM_TDB)	OR	OFF	OFF	2016/06/08 11:20 AM
L325	275	L324 not L319	(US-PGPUB; USPAT; USOCR; FPRS; EPO; JPO; DERWENT; IBM_TDB)	OR	OFF	OFF	2016/06/08 11:20 AM
L326	3	"20060263642"	(US-PGPUB; USPAT; USOCR; FPRS; EPO; JPO; DERWENT; IBM_TDB)	OR	ON	ON	2016/06/08 11:22 AM
L327	807	tunnel$4 and (solar	(US-PGPUB; USPAT;	OR	OFF	OFF	2016/06/08

		photovoltaic) and heterojunction and emitter	USOCR; FPRS; EPO; JPO; DERWENT; IBM_TDB)				11:23 AM
L328	427	L327 not L324	(US-PGPUB; USPAT; USOCR; FPRS; EPO; JPO; DERWENT; IBM_TDB)	OR	OFF	OFF	2016/06/08 11:23 AM
L329	35	"5563092"	(US-PGPUB; USPAT; USOCR; FPRS; EPO; JPO; DERWENT; IBM_TDB)	OR	ON	ON	2016/06/08 12:23 PM
L330	516761	polycrystalline and (thin tunnel$3) oxide and crystalline	(US-PGPUB; USPAT; USOCR; FPRS; EPO; JPO; DERWENT; IBM_TDB)	OR	ON	ON	2016/06/08 12:25 PM
L331	11587	polycrystalline and (thin tunnel$3) near2 oxide and crystalline	(US-PGPUB; USPAT; USOCR; FPRS; EPO; JPO; DERWENT; IBM_TDB)	OR	ON	ON	2016/06/08 12:25 PM
L332	1066	polycrystalline same (thin tunnel$3) near2 oxide same (monocrystalline wafer crystalline)	(US-PGPUB; USPAT; USOCR; FPRS; EPO; JPO; DERWENT; IBM_TDB)	OR	ON	ON	2016/06/08 12:25 PM
L333	147	polycrystalline same (thin tunnel$3) near2 oxide same (monocrystalline wafer crystalline) and (solar photovoltaic)	(US-PGPUB; USPAT; USOCR; FPRS; EPO; JPO; DERWENT; IBM_TDB)	OR	ON	ON	2016/06/08 12:25 PM
L334	282	(polysilicon polycrystalline) same (thin tunnel$3) near2 oxide same (monocrystalline wafer crystalline) and (solar photovoltaic)	(US-PGPUB; USPAT; USOCR; FPRS; EPO; JPO; DERWENT; IBM_TDB)	OR	ON	ON	2016/06/08 12:30 PM
L335	27	(emitter) with (thin tunnel$3) near2 oxide same (monocrystalline wafer crystalline) and (solar photovoltaic)	(US-PGPUB; USPAT; USOCR; FPRS; EPO; JPO; DERWENT; IBM_TDB)	OR	ON	ON	2016/06/08 12:39 PM
L336	28	(emitter) with (thin tunnel$3 interfacial) near2 oxide same (monocrystalline wafer crystalline) and (solar photovoltaic)	(US-PGPUB; USPAT; USOCR; FPRS; EPO; JPO; DERWENT; IBM_TDB)	OR	ON	ON	2016/06/08 12:40 PM
L337	1098	(thin tunnel$3) near2 oxide and heterojunction and (solar photovoltaic)	(US-PGPUB; USPAT; USOCR; FPRS; EPO; JPO; DERWENT; IBM_TDB)	OR	ON	ON	2016/06/08 12:42 PM
L339	432	(thin tunnel$3) near2 oxide and	(US-PGPUB; USPAT; USOCR; FPRS; EPO;	OR	ON	ON	2016/06/08 12:43 PM

		heterojunction and (solar photovoltaic).ab.	JPO; DERWENT; IBM_TDB)				
L340	405	L339 not L328	(US-PGPUB; USPAT; USOCR; FPRS; EPO; JPO; DERWENT; IBM_TDB)	OR	ON	ON	2016/06/08 12:43 PM
L341	176	(interfacial interface tunnel$3) near2 oxide and heterojunction and (solar photovoltaic).ab.	(US-PGPUB; USPAT; USOCR; FPRS; EPO; JPO; DERWENT; IBM_TDB)	OR	ON	ON	2016/06/08 12:46 PM
L342	3	"20070256728"	(US-PGPUB; USPAT; USOCR; FPRS; EPO; JPO; DERWENT; IBM_TDB)	OR	ON	ON	2016/06/08 12:49 PM
L343	16	emitter with interfacial near oxide and (solar photovoltaic)	(US-PGPUB; USPAT; USOCR; FPRS; EPO; JPO; DERWENT; IBM_TDB)	OR	ON	ON	2016/06/08 01:02 PM
L344	24	("3919639" | "4296372" | "4431460" | "4464627" | "4467519" | "4483726" | "4598249" | "4609867" | "4695794" | "4709141" | "4859939" | "4956603").PN. OR ("5138256").URPN.	(US-PGPUB; USPAT; USOCR)	OR	ON	ON	2016/06/08 01:05 PM
L345	353	(interfacial interface tunnel$3) near2 oxide same (polysilicon polycrystalline) and (solar photovoltaic)	(US-PGPUB; USPAT; USOCR; FPRS; EPO; JPO; DERWENT; IBM_TDB)	OR	ON	ON	2016/06/08 01:06 PM
L346	356	(interfacial interface tunnel$3) near2 oxide same (polysilicon polycrystalline multicrystalline) and (solar photovoltaic)	(US-PGPUB; USPAT; USOCR; FPRS; EPO; JPO; DERWENT; IBM_TDB)	OR	ON	ON	2016/06/08 01:09 PM
L347	449	(interfacial interface tunnel$3 silicon) near2 oxide with (interfac$3 tunnel$) same (polysilicon polycrystalline) and (solar photovoltaic)	(US-PGPUB; USPAT; USOCR; FPRS; EPO; JPO; DERWENT; IBM_TDB)	OR	ON	ON	2016/06/08 01:14 PM
L348	62	tunneling near oxide and (solar photovoltaic).ab.	(US-PGPUB; USPAT; USOCR; FPRS; EPO; JPO; DERWENT; IBM_TDB)	OR	ON	ON	2016/06/08 01:23 PM
L349	2632	(inversion tunneling near oxide) and (solar photovoltaic).ab.	(US-PGPUB; USPAT; USOCR; FPRS; EPO; JPO; DERWENT; IBM_TDB)	OR	ON	ON	2016/06/08 01:25 PM
L350	123	(inversion with oxide tunneling near oxide)	(US-PGPUB; USPAT; USOCR; FPRS; EPO;	OR	ON	ON	2016/06/08 01:25 PM

		and (solar photovoltaic).ab.	JPO; DERWENT; IBM_TDB)				
L351	276	(inversion with oxide tunnel$3 near oxide) and (solar photovoltaic).ab.	(US-PGPUB; USPAT; USOCR; FPRS; EPO; JPO; DERWENT; IBM_TDB)	OR	ON	ON	2016/06/08 01:26 PM
L352	222	(tunnel$3 near oxide) and (solar photovoltaic).ab.	(US-PGPUB; USPAT; USOCR; FPRS; EPO; JPO; DERWENT; IBM_TDB)	OR	ON	ON	2016/06/08 01:27 PM
L353	153	L352 not L350	(US-PGPUB; USPAT; USOCR; FPRS; EPO; JPO; DERWENT; IBM_TDB)	OR	ON	ON	2016/06/08 01:27 PM
L354	35	"5563092"	(US-PGPUB; USPAT; USOCR; FPRS; EPO; JPO; DERWENT; IBM_TDB)	OR	ON	ON	2016/06/08 01:37 PM
L355	84638	polysilicon with interfac$4 oxide with growth	(US-PGPUB; USPAT; USOCR; FPRS; EPO; JPO; DERWENT; IBM_TDB)	OR	ON	ON	2016/06/08 01:38 PM
L356	17344	polysilicon with interfac$4 oxide with growth with (crystalline single near crystal wafer)	(US-PGPUB; USPAT; USOCR; FPRS; EPO; JPO; DERWENT; IBM_TDB)	OR	ON	ON	2016/06/08 01:38 PM
L357	0	polysilicon with interfac$4 near3 oxide with growth with (crystalline single near crystal wafer)	(US-PGPUB; USPAT; USOCR; FPRS; EPO; JPO; DERWENT; IBM_TDB)	OR	ON	ON	2016/06/08 01:38 PM
L358	62	polysilicon with interfac$4 near3 oxide with (crystalline single near crystal wafer)	(US-PGPUB; USPAT; USOCR; FPRS; EPO; JPO; DERWENT; IBM_TDB)	OR	ON	ON	2016/06/08 01:38 PM
L359	142	"5011565"	(US-PGPUB; USPAT; USOCR; FPRS; EPO; JPO; DERWENT; IBM_TDB)	OR	ON	ON	2016/06/08 03:47 PM
L360	72	"5057439"	(US-PGPUB; USPAT; USOCR; FPRS; EPO; JPO; DERWENT; IBM_TDB)	OR	ON	ON	2016/06/08 03:51 PM
L361	6	"7858430"	(US-PGPUB; USPAT; USOCR; FPRS; EPO; JPO; DERWENT; IBM_TDB)	OR	ON	ON	2016/06/08 03:54 PM
L362	17	(anti?reflect$4) with (stack) with ITO and (solar photovoltaic)	(US-PGPUB; USPAT; USOCR; FPRS; EPO; JPO; DERWENT; IBM_TDB)	OR	ON	ON	2016/06/08 04:15 PM
L363	4439	(aluminum Al) with	(US-PGPUB; USPAT;	OR	ON	ON	2016/06/08

		(silver Ag) with electrode and (solar photovoltaic).ab.	USOCR; FPRS; EPO; JPO; DERWENT; IBM_TDB)				05:20 PM
L364	660	(aluminum Al) with (silver Ag) with electrode and (solar photovoltaic).ab. and BSF	(US-PGPUB; USPAT; USOCR; FPRS; EPO; JPO; DERWENT; IBM_TDB)	OR	ON	ON	2016/06/08 05:21 PM
L365	51	("4403392" | "4502206").PN. OR ("5057439").URPN.	(US-PGPUB; USPAT; USOCR)	OR	ON	ON	2016/06/08 05:40 PM
L366	212	(polycrystalline polysilicon) near2 emitter and (solar photovoltaic)	(US-PGPUB; USPAT; USOCR; FPRS; EPO; JPO; DERWENT; IBM_TDB)	OR	ON	ON	2016/06/08 05:51 PM
L367	689	(polycrystalline polysilicon) and BSF and (single near crystal$4 monocrystalline) near5 substrate and (solar photovoltaic)	(US-PGPUB; USPAT; USOCR; FPRS; EPO; JPO; DERWENT; IBM_TDB)	OR	ON	ON	2016/06/08 05:52 PM
L368	699	(polycrystalline polysilicon) and (FSF BSF) and (single near crystal$4 monocrystalline) near5 substrate and (solar photovoltaic)	(US-PGPUB; USPAT; USOCR; FPRS; EPO; JPO; DERWENT; IBM_TDB)	OR	ON	ON	2016/06/08 05:53 PM
L369	507	(polycrystalline polysilicon) and (FSF BSF) and (single near crystal$4 monocrystalline) near5 substrate and (solar photovoltaic).ab.	(US-PGPUB; USPAT; USOCR; FPRS; EPO; JPO; DERWENT; IBM_TDB)	OR	ON	ON	2016/06/08 05:53 PM
L370	63	(polycrystalline polysilicon) and (FSF) and (single near crystal$4 monocrystalline) near5 substrate and (solar photovoltaic).ab.	(US-PGPUB; USPAT; USOCR; FPRS; EPO; JPO; DERWENT; IBM_TDB)	OR	ON	ON	2016/06/08 05:54 PM
L371	93	(FSF) and (single near crystal$4 monocrystalline) near5 substrate and (solar photovoltaic).ab.	(US-PGPUB; USPAT; USOCR; FPRS; EPO; JPO; DERWENT; IBM_TDB)	OR	ON	ON	2016/06/08 05:55 PM
L372	30	L371 not L370	(US-PGPUB; USPAT; USOCR; FPRS; EPO; JPO; DERWENT; IBM_TDB)	OR	ON	ON	2016/06/08 05:56 PM
L373	186	(FSF front near2 surface near field) and	(US-PGPUB; USPAT; USOCR; FPRS; EPO;	OR	ON	ON	2016/06/08 05:57 PM

		(single near crystal$4 monocrystalline) near5 substrate and (solar photovoltaic).ab.	JPO; DERWENT; IBM_TDB)				
L374	265	(FSF front near2 surface near field) and (single near crystal$4 monocrystalline wafer) near5 substrate and (solar photovoltaic).ab.	(US-PGPUB; USPAT; USOCR; FPRS; EPO; JPO; DERWENT; IBM_TDB)	OR	ON	ON	2016/06/08 05:58 PM
L375	172	L374 not L371	(US-PGPUB; USPAT; USOCR; FPRS; EPO; JPO; DERWENT; IBM_TDB)	OR	ON	ON	2016/06/08 05:58 PM
L376	71	Veschetti.in.	(US-PGPUB; USPAT; USOCR; FPRS; EPO; JPO; DERWENT; IBM_TDB)	OR	ON	ON	2016/06/08 06:02 PM
L377	53	Veschetti.in. and photovoltaic	(US-PGPUB; USPAT; USOCR; FPRS; EPO; JPO; DERWENT; IBM_TDB)	OR	ON	ON	2016/06/08 06:02 PM
L378	1	2008-D39688.NRAN.	(DERWENT)	OR	ON	ON	2016/06/08 06:03 PM
L379	7	"2003083955"	(US-PGPUB; USPAT; USOCR; FPRS; EPO; JPO; DERWENT; IBM_TDB)	OR	ON	ON	2016/06/08 06:04 PM
L380	19	"5134090"	(US-PGPUB; USPAT; USOCR; FPRS; EPO; JPO; DERWENT; IBM_TDB)	OR	ON	ON	2016/06/08 06:06 PM
L381	2	("20030183270"|"5057439").PN.	(US-PGPUB; USPAT)	OR	ON	ON	2016/06/08 06:21 PM
L382	2	"20030183270"	(US-PGPUB; USPAT)	OR	ON	ON	2016/06/08 06:25 PM
L383	2	("8222516"|"8878053"). PN.	(US-PGPUB; USPAT)	OR	ON	ON	2016/06/08 06:29 PM
L384	32	(H01L31/0236 H01L31/0745 H01L31/1804 H01L31/022425 H01L31/068 H01L31/182 H01L31/056).cpc. and (Y02E10/52 Y02P70/521 Y02E10/547).cpc. and (polysilicon polycrystalline) near emitter and tunnel$3 near oxide	(US-PGPUB; USPAT; USOCR; FPRS; EPO; JPO; DERWENT; IBM_TDB)	OR	ON	ON	2016/06/08 06:44 PM
L385	1	"14504771"	(US-PGPUB; USPAT; USOCR; FPRS; EPO;	OR	ON	ON	2016/10/05 10:07 AM

			JPO; DERWENT; IBM_TDB)				
L386	76	(US-20050268963-$ or US-20020153039-$ or US-20060196535-$ or US-20090101199-$ or US-20040097062-$ or US-20040112426-$ or US-20070186970-$ or US-20050272175-$ or US-20040063326-$ or US-20100224238-$ or US-20100000597-$ or US-20070256728-$ or US-20060060238-$ or US-20080092944-$ or US-20110162706-$ or US-20070151598-$ or US-20080092951-$ or US-20110104618-$ or US-20080223446-$ or US-20070151599-$ or US-20090205712-$ or US-20100186803-$ or US-20090142880-$ or US-20060255340-$ or US-20050017257-$ or US-20100186802-$).did. or (US-20020142500-$ or US-20040003836-$ or US-20100087031-$).did. or (US-4379944-$ or US-4665277-$ or US-5320684-$ or US-6210991-$ or US-5792280-$ or US-5899704-$ or US-6262359-$ or US-5258077-$ or US-6071753-$ or US-7468485-$ or US-7838400-$ or US-5641362-$ or US-8222516-$ or US-3961997-$ or US-5057439-$ or US-8207443-$ or US-5138256-$ or US-7633006-$ or US-6130380-$ or US-5738731-$ or US-4927770-$ or US-6624049-$ or US-4152824-$ or US-6214743-$ or US-7029943-$ or US-	(US-PGPUB; USPAT; FPRS; EPO; DERWENT)	OR	ON	ON	2016/10/05 10:10 AM

		6998288-$).did. or (US-8878053-$ or US-8207444-$ or US-5538564-$ or US-7566974-$ or US-5030295-$ or US-6407012-$ or US-5563092-$ or US-7858430-$ or US-7554031-$).did. or (WO-2009094578-$ or WO-2009094578-$).did. or (WO-2009094578-$).did. or (US-20090205712-$ or US-20080121279-$ or WO-2007130188-$ or US-7468485-$ or JP-07106611-$ or US-20040200520-$ or JP-2004247364-$ or US-5030295-$ or WO-03083955-$).did.					
L387	19	L386 and emitter with (back$4 rear$4)	(US-PGPUB; USPAT; USOCR; FPRS; EPO; JPO; DERWENT; IBM_TDB)	OR	ON	ON	2016/10/05 10:10 AM
L388	5	"20060048809"	(US-PGPUB; USPAT; USOCR; FPRS; EPO; JPO; DERWENT; IBM_TDB)	OR	ON	ON	2016/10/06 09:33 AM
L389	10	"2007106611"	(US-PGPUB; USPAT; USOCR; FPRS; EPO; JPO; DERWENT; IBM_TDB)	OR	ON	ON	2017/01/10 03:14 PM
L390	5	"07106611"	(US-PGPUB; USPAT; USOCR; FPRS; EPO; JPO; DERWENT; IBM_TDB)	OR	ON	ON	2017/01/10 03:16 PM
L391	5	"07106611"	(US-PGPUB; USPAT; USOCR; FPRS; EPO; JPO; DERWENT; IBM_TDB)	OR	ON	ON	2017/01/18 11:38 AM
L392	2	"12421570"	(US-PGPUB; USPAT; USOCR; FPRS; EPO; JPO; DERWENT; IBM_TDB)	OR	ON	ON	2017/01/31 10:50 AM
L393	116	"7468485"	(US-PGPUB; USPAT; USOCR; FPRS; EPO; JPO; DERWENT; IBM_TDB)	OR	ON	ON	2017/01/31 10:53 AM
L394	70	"6262359"	(US-PGPUB; USPAT; USOCR; FPRS; EPO; JPO; DERWENT; IBM_TDB)	OR	ON	ON	2017/04/14 09:47 AM

L395	23	"2009094578"	(US-PGPUB; USPAT; USOCR; FPRS; EPO; JPO; DERWENT; IBM_TDB)	OR	ON	ON	2017/04/14 10:09 AM
L396	1	"14504771"	(US-PGPUB; USPAT; USOCR; FPRS; EPO; JPO; DERWENT; IBM_TDB)	OR	ON	ON	2017/04/17 11:21 AM
L397	23	"2009094578"	(US-PGPUB; USPAT; USOCR; FPRS; EPO; JPO; DERWENT; IBM_TDB)	OR	ON	ON	2017/04/17 11:40 AM
L398	23	"2009094578"	(US-PGPUB; USPAT; USOCR; FPRS; EPO; JPO; DERWENT; IBM_TDB)	OR	ON	ON	2017/04/17 03:34 PM
L399	18	"2009031886"	(US-PGPUB; USPAT; USOCR; FPRS; EPO; JPO; DERWENT; IBM_TDB)	OR	ON	ON	2017/04/17 03:34 PM
L400	1	"14504771"	(US-PGPUB; USPAT; USOCR; FPRS; EPO; JPO; DERWENT; IBM_TDB)	OR	ON	ON	2017/06/26 09:27 AM
L401	73	"6262359"	(US-PGPUB; USPAT; USOCR; FPRS; EPO; JPO; DERWENT; IBM_TDB)	OR	ON	ON	2017/06/26 09:30 AM
L402	76	(US-20050268963-$ or US-20020153039-$ or US-20060196535-$ or US-20090101199-$ or US-20040097062-$ or US-20040112426-$ or US-20070186970-$ or US-20050272175-$ or US-20040063326-$ or US-20100224238-$ or US-20100000597-$ or US-20070256728-$ or US-20060060238-$ or US-20080092944-$ or US-20110162706-$ or US-20070151598-$ or US-20080092951-$ or US-20110104618-$ or US-20080223446-$ or US-20070151599-$ or US-20090205712-$ or US-20100186803-$ or US-20090142880-$ or US-20060255340-$ or US-20050017257-$ or US-20100186802-$).did. or (US-	(US-PGPUB; USPAT; FPRS; EPO; DERWENT)	OR	ON	ON	2017/06/26 09:33 AM

		20020142500-$ or US-20040003836-$ or US-20100087031-$).did. or (US-4379944-$ or US-4665277-$ or US-5320684-$ or US-6210991-$ or US-5792280-$ or US-5899704-$ or US-6262359-$ or US-5258077-$ or US-6071753-$ or US-7468485-$ or US-7838400-$ or US-5641362-$ or US-8222516-$ or US-3961997-$ or US-5057439-$ or US-8207443-$ or US-5138256-$ or US-7633006-$ or US-6130380-$ or US-5738731-$ or US-4927770-$ or US-6624049-$ or US-4152824-$ or US-6214743-$ or US-7029943-$ or US-6998288-$).did. or (US-8878053-$ or US-8207444-$ or US-5538564-$ or US-7566974-$ or US-5030295-$ or US-6407012-$ or US-5563092-$ or US-7858430-$ or US-7554031-$).did. or (WO-2009094578-$ or WO-2009094578-$).did. or (WO-2009094578-$).did. or (US-20090205712-$ or US-20080121279-$ or WO-2007130188-$ or US-7468485-$ or JP-07106611-$ or US-20040200520-$ or JP-2004247364-$ or US-5030295-$ or WO-03083955-$).did.					
L403	25	L402 and (contact near2 (resistance resistivi$3))	(US-PGPUB; USPAT; USOCR; FPRS; EPO; JPO; DERWENT; IBM_TDB)	OR	ON	ON	2017/06/26 09:34 AM
L404	787	(solar photovoltaic).ab. and (contact near2	(US-PGPUB; USPAT; USOCR; FPRS; EPO;	OR	ON	ON	2017/06/26 09:39 AM

		(resistance resistivi$3)) near7 (dop$3 diffus$4)	JPO; DERWENT; IBM_TDB)				
L405	678	(solar photovoltaic).ab. and (contact near2 (resistance resistivi$3)) near7 (dop$3 diffus$4) and (crystal$4 wafer)	(US-PGPUB; USPAT; USOCR; FPRS; EPO; JPO; DERWENT; IBM_TDB)	OR	ON	ON	2017/06/26 09:43 AM
L406	230	(solar photovoltaic).ab. and (contact near2 (resistance resistivi$3)) near7 (dop$3 diffus$4) and (crystal$4 wafer) and ohms	(US-PGPUB; USPAT; USOCR; FPRS; EPO; JPO; DERWENT; IBM_TDB)	OR	ON	ON	2017/06/26 09:46 AM
L408	1	L400 and omega	(US-PGPUB; USPAT; USOCR; FPRS; EPO; JPO; DERWENT; IBM_TDB)	OR	ON	ON	2017/06/26 09:51 AM
L409	196	(solar photovoltaic).ab. and (contact near2 (resistance resistivi$3)) near7 (dop$3 diffus$4) and (crystal$4 wafer) and omega	(US-PGPUB; USPAT; USOCR; FPRS; EPO; JPO; DERWENT; IBM_TDB)	OR	ON	ON	2017/06/26 09:51 AM
L410	14	("3620829" | "4078945" | "4227942" | "4640001" | "4675466").PN. OR ("5759292").URPN.	(US-PGPUB; USPAT; USOCR)	OR	ON	ON	2017/06/26 10:16 AM
L411	66	(solar photovoltaic).ab. and (contact near2 (resistance resistivi$3)) near7 (dop$3 diffus$4) same omega	(US-PGPUB; USPAT; USOCR; FPRS; EPO; JPO; DERWENT; IBM_TDB)	OR	ON	ON	2017/06/26 10:20 AM
L412	219	(solar photovoltaic).ab. and (contact near2 (resistance resistivi$3)) same omega	(US-PGPUB; USPAT; USOCR; FPRS; EPO; JPO; DERWENT; IBM_TDB)	OR	ON	ON	2017/06/26 10:22 AM
L413	153	L412 not L411	(US-PGPUB; USPAT; USOCR; FPRS; EPO; JPO; DERWENT; IBM_TDB)	OR	ON	ON	2017/06/26 10:22 AM
L414	9	"20090017606"	(US-PGPUB; USPAT; USOCR; FPRS; EPO; JPO; DERWENT; IBM_TDB)	OR	ON	ON	2017/06/26 10:26 AM
L415	1	2007-797066.NRAN.	(DERWENT)	OR	ON	ON	2017/06/26 10:26 AM
L416	1	2007-797066.NRAN.	(DERWENT)	OR	ON	ON	2017/06/26 10:28 AM
L417	120	"4152824"	(US-PGPUB; USPAT; USOCR; FPRS; EPO; JPO; DERWENT; IBM_TDB)	OR	ON	ON	2017/06/26 10:29 AM
L418	209	(solar photovoltaic).ab.	(US-PGPUB; USPAT;	OR	ON	ON	2017/06/26

		and (contact near2 (resistance resistivi$3)) near7 (dop$3 diffus$4) and omega	USOCR; FPRS; EPO; JPO; DERWENT; IBM_TDB)				11:07 AM
L419	107	L418 not L412	(US-PGPUB; USPAT; USOCR; FPRS; EPO; JPO; DERWENT; IBM_TDB)	OR	ON	ON	2017/06/26 11:07 AM
L420	131	(solar photovoltaic).ab. and (contact near2 (resistance resistivi$3)) near7 (dop$3 diffus$4) and (back rear) near2 (junction)	(US-PGPUB; USPAT; USOCR; FPRS; EPO; JPO; DERWENT; IBM_TDB)	OR	ON	ON	2017/06/26 11:18 AM
L421	3	"20100197126"	(US-PGPUB; USPAT; USOCR; FPRS; EPO; JPO; DERWENT; IBM_TDB)	OR	ON	ON	2017/06/26 11:23 AM
L422	210	"6429037"	(US-PGPUB; USPAT; USOCR; FPRS; EPO; JPO; DERWENT; IBM_TDB)	OR	ON	ON	2017/06/26 11:25 AM
L423	82	(US-20050268963-$ or US-20020153039-$ or US-20060196535-$ or US-20090101199-$ or US-20040097062-$ or US-20040112426-$ or US-20070186970-$ or US-20050272175-$ or US-20040063326-$ or US-20100224238-$ or US-20100000597-$ or US-20070256728-$ or US-20060060238-$ or US-20080092944-$ or US-20110162706-$ or US-20070151598-$ or US-20080092951-$ or US-20110104618-$ or US-20080223446-$ or US-20070151599-$ or US-20090205712-$ or US-20100186803-$ or US-20090142880-$ or US-20060255340-$ or US-20050017257-$ or US-20100186802-$).did. or (US-20020142500-$ or US-20040003836-$ or US-20100087031-$ or US-20090017606-$ or US-20090183768-$ or US-20110139231-$).did. or (US-4379944-$ or US-	(US-PGPUB; USPAT; FPRS; EPO; DERWENT)	OR	ON	ON	2017/06/26 12:56 PM

		4665277-$ or US-5320684-$ or US-6210991-$ or US-5792280-$ or US-5899704-$ or US-6262359-$ or US-5258077-$ or US-6071753-$ or US-7468485-$ or US-7838400-$ or US-5641362-$ or US-8222516-$ or US-3961997-$ or US-5057439-$ or US-8207443-$ or US-5138256-$ or US-7633006-$ or US-6130380-$ or US-5738731-$ or US-4927770-$ or US-6624049-$ or US-4152824-$ or US-6214743-$ or US-7029943-$ or US-6998288-$).did. or (US-8878053-$ or US-8207444-$ or US-5538564-$ or US-7566974-$ or US-5030295-$ or US-6407012-$ or US-5563092-$ or US-7858430-$ or US-7554031-$ or US-5759292-$ or US-6429037-$).did. or (WO-2009094578-$ or WO-2009094578-$).did. or (WO-2009094578-$).did. or (US-20090205712-$ or US-20080121279-$ or WO-2007130188-$ or US-7468485-$ or JP-07106611-$ or US-20040200520-$ or JP-2004247364-$ or US-5030295-$ or WO-03083955-$ or WO-2007082760-$).did.					
L424	34	L423 and polysilicon	(US-PGPUB; USPAT; FPRS; EPO; DERWENT)	OR	ON	ON	2017/06/26 12:56 PM
L425	105792	(silicon near nitride "Si.sub.3N.sub.4") with dielectric	(US-PGPUB; USPAT; FPRS; EPO; DERWENT)	OR	ON	ON	2017/06/26 01:59 PM
L426	1931	(silicon near nitride	(US-PGPUB; USPAT;	OR	ON	ON	2017/06/26

		"Si.sub.3N.sub.4") with dielectric and (solar photovoltaic).ab.	FPRS; EPO; DERWENT)				01:59 PM
L427	1235	(silicon near nitride "Si.sub.3N.sub.4") near5 dielectric and (solar photovoltaic).ab.	(US-PGPUB; USPAT; FPRS; EPO; DERWENT)	OR	ON	ON	2017/06/26 01:59 PM
L428	785	(silicon near nitride "Si.sub.3N.sub.4") near5 dielectric and (solar photovoltaic).ab. and H01L31$.cpc.	(US-PGPUB; USPAT; FPRS; EPO; DERWENT)	OR	ON	ON	2017/06/26 02:00 PM
L429	373	(silicon near nitride "Si.sub.3N.sub.4") near8 (titanium dioxide "TiO.sub.2") with dielectric and (solar photovoltaic).ab. and H01L31$.cpc.	(US-PGPUB; USPAT; FPRS; EPO; DERWENT)	OR	ON	ON	2017/06/26 02:00 PM
L430	91	(silicon near nitride "Si.sub.3N.sub.4") near8 (titanium near dioxide "TiO.sub.2") with dielectric and (solar photovoltaic).ab. and H01L31$.cpc.	(US-PGPUB; USPAT; FPRS; EPO; DERWENT)	OR	ON	ON	2017/06/26 02:01 PM
L431	82	(US-20050268963-$ or US-20020153039-$ or US-20060196535-$ or US-20090101199-$ or US-20040097062-$ or US-20040112426-$ or US-20070186970-$ or US-20050272175-$ or US-20040063326-$ or US-20100224238-$ or US-20100000597-$ or US-20070256728-$ or US-20060060238-$ or US-20080092944-$ or US-20110162706-$ or US-20070151598-$ or US-20080092951-$ or US-20110104618-$ or US-20080223446-$ or US-20070151599-$ or US-20090205712-$ or US-20100186803-$ or US-20090142880-$ or US-20060255340-$ or US-20050017257-$ or US-20100186802-$).did. or (US-20020142500-$ or US-20040003836-$ or US-20100087031-$ or US-	(US-PGPUB; USPAT; FPRS; EPO; DERWENT)	OR	ON	ON	2017/06/26 02:59 PM

		20090017606-$ or US-20090183768-$ or US-20110139231-$).did. or (US-4379944-$ or US-4665277-$ or US-5320684-$ or US-6210991-$ or US-5792280-$ or US-5899704-$ or US-6262359-$ or US-5258077-$ or US-6071753-$ or US-7468485-$ or US-7838400-$ or US-5641362-$ or US-8222516-$ or US-3961997-$ or US-5057439-$ or US-8207443-$ or US-5138256-$ or US-7633006-$ or US-6130380-$ or US-5738731-$ or US-4927770-$ or US-6624049-$ or US-4152824-$ or US-6214743-$ or US-7029943-$ or US-6998288-$).did. or (US-8878053-$ or US-8207444-$ or US-5538564-$ or US-7566974-$ or US-5030295-$ or US-6407012-$ or US-5563092-$ or US-7858430-$ or US-7554031-$ or US-5759292-$ or US-6429037-$).did. or (WO-2009094578-$ or WO-2009094578-$).did. or (WO-2009094578-$).did. or (US-20090205712-$ or US-20080121279-$ or WO-2007130188-$ or US-7468485-$ or JP-07106611-$ or US-20040200520-$ or JP-2004247364-$ or US-5030295-$ or WO-03083955-$ or WO-2007082760-$).did.					
L432	17	L431 and omega	(US-PGPUB; USPAT; FPRS; EPO; DERWENT)	OR	ON	ON	2017/06/26 02:59 PM

L433	1	2007-797066.NRAN.	(DERWENT)	OR	ON	ON	2017/06/26 03:03 PM
L434	1	2007-797066.NRAN.	(DERWENT)	OR	ON	ON	2017/06/26 03:09 PM
L435	21	"8222516"	(US-PGPUB; USPAT; FPRS; EPO; DERWENT)	OR	ON	ON	2017/06/26 03:27 PM
L436	27	"8207444"	(US-PGPUB; USPAT; FPRS; EPO; DERWENT)	OR	ON	ON	2017/06/26 03:28 PM
L437	667	grad$4 with index and (solar photovoltaic).ab.	(US-PGPUB; USPAT; FPRS; EPO; DERWENT)	OR	ON	ON	2017/06/26 04:39 PM
L438	114	grad$4 with index same (oxide "TiO.sub.2" silica SiO) and (solar photovoltaic).ab.	(US-PGPUB; USPAT; FPRS; EPO; DERWENT)	OR	ON	ON	2017/06/26 04:39 PM
L439	1	"14504771"	(US-PGPUB; USPAT; USOCR; FPRS; EPO; JPO; DERWENT; IBM_TDB)	OR	ON	ON	2017/09/28 11:59 AM
L440	692	polysilicon with surface near2 field	(US-PGPUB; USPAT; USOCR; FPRS; EPO; JPO; DERWENT; IBM_TDB)	OR	ON	ON	2017/09/28 02:44 PM
L441	71	polysilicon with surface near2 field same (crystalline wafer monocrystalline crystal)	(US-PGPUB; USPAT; USOCR; FPRS; EPO; JPO; DERWENT; IBM_TDB)	OR	ON	ON	2017/09/28 02:45 PM
L442	73	(polysilicon) with (surface near2 field BSF FSF) same (crystalline wafer monocrystalline crystal)	(US-PGPUB; USPAT; USOCR; FPRS; EPO; JPO; DERWENT; IBM_TDB)	OR	ON	ON	2017/09/28 02:47 PM
L443	146	(polysilicon polycrystalline near2 silicon) with (surface near2 field BSF FSF) same (crystalline wafer monocrystalline crystal)	(US-PGPUB; USPAT; USOCR; FPRS; EPO; JPO; DERWENT; IBM_TDB)	OR	ON	ON	2017/09/28 02:48 PM
L444	73	L443 not L442	(US-PGPUB; USPAT; USOCR; FPRS; EPO; JPO; DERWENT; IBM_TDB)	OR	ON	ON	2017/09/28 02:49 PM
L445	1	"14504771"	(US-PGPUB; USPAT; USOCR; FPRS; EPO; JPO; DERWENT; IBM_TDB)	OR	ON	ON	2018/03/01 06:41 PM
L446	1	"14504771"	(US-PGPUB; USPAT; USOCR; FPRS; EPO; JPO; DERWENT; IBM_TDB)	OR	ON	ON	2018/03/05 04:07 PM
L447	83	(US-20050268963-$ or	(US-PGPUB; USPAT;	OR	ON	ON	2018/03/28

		US-20020153039-$ or US-20060196535-$ or US-20090101199-$ or US-20040097062-$ or US-20040112426-$ or US-20070186970-$ or US-20050272175-$ or US-20040063326-$ or US-20100224238-$ or US-20100000597-$ or US-20070256728-$ or US-20060060238-$ or US-20080092944-$ or US-20110162706-$ or US-20070151598-$ or US-20080092951-$ or US-20110104618-$ or US-20080223446-$ or US-20070151599-$ or US-20090205712-$ or US-20100186803-$ or US-20090142880-$ or US-20060255340-$ or US-20050017257-$ or US-20100186802-$).did. or (US-20020142500-$ or US-20040003836-$ or US-20100087031-$ or US-20090017606-$ or US-20090183768-$ or US-20110139231-$).did. or (US-4379944-$ or US-4665277-$ or US-5320684-$ or US-6210991-$ or US-5792280-$ or US-5899704-$ or US-6262359-$ or US-5258077-$ or US-6071753-$ or US-7468485-$ or US-7838400-$ or US-5641362-$ or US-8222516-$ or US-3961997-$ or US-5057439-$ or US-8207443-$ or US-5138256-$ or US-7633006-$ or US-6130380-$ or US-5738731-$ or US-4927770-$ or US-6624049-$ or US-4152824-$ or US-6214743-$ or US-7029943-$ or US-6998288-$).did. or (US-	FPRS; EPO; DERWENT)				01:53 PM

		8878053-$ or US-8207444-$ or US-5538564-$ or US-7566974-$ or US-5030295-$ or US-6407012-$ or US-5563092-$ or US-7858430-$ or US-7554031-$ or US-5759292-$ or US-6429037-$ or US-6146483-$).did. or (WO-2009094578-$ or WO-2009094578-$).did. or (WO-2009094578-$).did. or (US-20090205712-$ or US-20080121279-$ or WO-2007130188-$ or US-7468485-$ or JP-07106611-$ or US-20040200520-$ or JP-2004247364-$ or US-5030295-$ or WO-03083955-$ or WO-2007082760-$).did.					
L448	47	L447 and (Al aluminum) with (electrode contact)	(US-PGPUB; USPAT; USOCR; FPRS; EPO; JPO; DERWENT; IBM_TDB)	OR	ON	ON	2018/03/28 01:54 PM
L449	10	"20060157103"	(US-PGPUB; USPAT; USOCR; FPRS; EPO; JPO; DERWENT; IBM_TDB)	OR	ON	ON	2020/05/26 04:56 PM
L450	3	"20090205712"	(US-PGPUB; USPAT; USOCR; FPRS; EPO; JPO; DERWENT; IBM_TDB)	OR	ON	ON	2020/05/26 04:58 PM
L451	4	"20100037936"	(US-PGPUB; USPAT; USOCR; FPRS; EPO; JPO; DERWENT; IBM_TDB)	OR	ON	ON	2020/05/26 04:58 PM
L452	83	(US-20050268963-$ or US-20020153039-$ or US-20060196535-$ or US-20090101199-$ or US-20040097062-$ or US-20040112426-$ or US-20070186970-$ or US-20050272175-$ or US-20040063326-$ or US-20100224238-$ or US-20100000597-$ or US-20070256728-$ or US-20060060238-$ or US-20080092944-$ or	(US-PGPUB; USPAT; FPRS; EPO; DERWENT)	OR	ON	ON	2020/05/26 04:59 PM

		US-20110162706-$ or US-20070151598-$ or US-20080092951-$ or US-20110104618-$ or US-20080223446-$ or US-20070151599-$ or US-20090205712-$ or US-20100186803-$ or US-20090142880-$ or US-20060255340-$ or US-20050017257-$ or US-20100186802-$).did. or (US-20020142500-$ or US-20040003836-$ or US-20100087031-$ or US-20090017606-$ or US-20090183768-$ or US-20110139231-$).did. or (US-4379944-$ or US-4665277-$ or US-5320684-$ or US-6210991-$ or US-5792280-$ or US-5899704-$ or US-6262359-$ or US-5258077-$ or US-6071753-$ or US-7468485-$ or US-7838400-$ or US-5641362-$ or US-8222516-$ or US-3961997-$ or US-5057439-$ or US-8207443-$ or US-5138256-$ or US-7633006-$ or US-6130380-$ or US-5738731-$ or US-4927770-$ or US-6624049-$ or US-4152824-$ or US-6214743-$ or US-7029943-$ or US-6998288-$).did. or (US-8878053-$ or US-8207444-$ or US-5538564-$ or US-7566974-$ or US-5030295-$ or US-6407012-$ or US-5563092-$ or US-7858430-$ or US-7554031-$ or US-5759292-$ or US-6429037-$ or US-6146483-$).did. or (WO-2009094578-$ or					

		WO-2009094578-$).did. or (WO-2009094578-$).did. or (US-20090205712-$ or US-20080121279-$ or WO-2007130188-$ or US-7468485-$ or JP-07106611-$ or US-20040200520-$ or JP-2004247364-$ or US-5030295-$ or WO-03083955-$ or WO-2007082760-$).did.					
L453	10	L452 and edge near2 isolation	(US-PGPUB; USPAT; USOCR; FPRS; EPO; JPO; DERWENT; IBM_TDB)	OR	ON	ON	2020/05/26 04:59 PM
L454	14	"12166266"	(US-PGPUB; USPAT; USOCR; FPRS; EPO; JPO; DERWENT; IBM_TDB)	OR	ON	ON	2020/05/26 05:01 PM
L455	0	"12166266" and trench.clm.	(US-PGPUB; USPAT; USOCR; FPRS; EPO; JPO; DERWENT; IBM_TDB)	OR	ON	ON	2020/05/26 05:03 PM
L456	48	trench same edge with electric$4 with isolation and (solar near2 (cell battery) photovoltaic)	(US-PGPUB; USPAT; USOCR; FPRS; EPO; JPO; DERWENT; IBM_TDB)	OR	ON	ON	2020/05/26 05:03 PM
L457	2257	(photovoltaic solar near2 (cell battery)) same (back rear) near contact and (busbar bus near bar)	(US-PGPUB; USPAT; USOCR; FPRS; EPO; JPO; DERWENT; IBM_TDB)	OR	ON	ON	2020/05/26 05:27 PM
L458	1925	(photovoltaic solar near2 (cell battery)) with (back rear) near contact and (busbar bus near bar)	(US-PGPUB; USPAT; USOCR; FPRS; EPO; JPO; DERWENT; IBM_TDB)	OR	ON	ON	2020/05/26 05:28 PM
L459	633	(photovoltaic solar near2 (cell battery)) with (back rear) near contact and (busbar bus near bar) same interconnect$4	(US-PGPUB; USPAT; USOCR; FPRS; EPO; JPO; DERWENT; IBM_TDB)	OR	ON	ON	2020/05/26 05:28 PM
L460	3398	(photovoltaic solar near2 (cell battery)) and (busbar bus near bar) with (rear back)	(US-PGPUB; USPAT; USOCR; FPRS; EPO; JPO; DERWENT; IBM_TDB)	OR	ON	ON	2020/05/26 05:32 PM
L461	2145	(photovoltaic solar near2 (cell battery)) and (busbar bus near bar) with (rear back)	(US-PGPUB; USPAT; USOCR)	OR	ON	ON	2020/05/26 05:32 PM
L462	1258	(photovoltaic solar	(US-PGPUB; USPAT;	OR	ON	ON	2020/05/26

		near2 (cell battery)) and (busbar bus near bar) with (rear back) and (busbar bus near bar) with (front)	USOCR)				05:32 PM
L463	90	(photovoltaic solar near2 (cell battery)) and (busbar bus near bar) with (rear back) and (busbar bus near bar) with (front) and (front near surface near field FSF)	(US-PGPUB; USPAT; USOCR)	OR	ON	ON	2020/05/26 05:34 PM
L464	275	(photovoltaic solar near2 (cell battery)) and (busbar bus near bar) and (front near surface near field FSF)	(US-PGPUB; USPAT; USOCR)	OR	ON	ON	2020/05/26 05:36 PM
L465	185	L464 not L463	(US-PGPUB; USPAT; USOCR)	OR	ON	ON	2020/05/26 05:37 PM
L466	1488	(photovoltaic solar near2 (cell battery)) and (busbar bus near bar) and (surface near field FSF)	(US-PGPUB; USPAT; USOCR)	OR	ON	ON	2020/05/26 05:39 PM
L467	314	(photovoltaic solar near2 (cell battery)) and (busbar bus near bar) and (back near junction)	(US-PGPUB; USPAT; USOCR)	OR	ON	ON	2020/05/26 05:39 PM
L468	220	L467 not L464	(US-PGPUB; USPAT; USOCR)	OR	ON	ON	2020/05/26 05:39 PM
L469	394	(photovoltaic solar near2 (cell battery)) and (busbar bus near bar) and ((back rear) near junction)	(US-PGPUB; USPAT; USOCR)	OR	ON	ON	2020/05/26 05:42 PM
L470	80	L469 not L467	(US-PGPUB; USPAT; USOCR)	OR	ON	ON	2020/05/26 05:42 PM
L471	73	"4665277"	(US-PGPUB; USPAT; USOCR; FPRS; EPO; JPO; DERWENT; IBM_TDB)	OR	ON	ON	2020/05/27 09:40 AM
L472	2	"20090301557"	(US-PGPUB; USPAT; USOCR; FPRS; EPO; JPO; DERWENT; IBM_TDB)	OR	ON	ON	2020/05/27 09:47 AM
L473	1	"14686801"	(US-PGPUB; USPAT; USOCR; FPRS; EPO; JPO; DERWENT; IBM_TDB)	OR	ON	ON	2020/05/27 09:49 AM
L474	14	("20100218821"|"20100275983"|"20130061924"|"20090301557"|"20100224251"|"2012004049	(US-PGPUB; USPAT; USOCR; FPRS; EPO; JPO; DERWENT; IBM_TDB)	OR	ON	ON	2020/05/27 09:52 AM

		0").PN.					
L475	3	"20040200520"	(US-PGPUB; USPAT; USOCR; FPRS; EPO; JPO; DERWENT; IBM_TDB)	OR	ON	ON	2020/05/27 10:00 AM
L476	3	"20050189015"	(US-PGPUB; USPAT; USOCR; FPRS; EPO; JPO; DERWENT; IBM_TDB)	OR	ON	ON	2020/05/27 10:02 AM
L477	2	"20050189013"	(US-PGPUB; USPAT; USOCR; FPRS; EPO; JPO; DERWENT; IBM_TDB)	OR	ON	ON	2020/05/27 10:02 AM
L478	9	"6461947"	(US-PGPUB; USPAT; USOCR; FPRS; EPO; JPO; DERWENT; IBM_TDB)	OR	ON	ON	2020/05/27 10:03 AM
L479	1119	point near contact with (rear back) and ("SiO.sub.2" silica passivat$4)	(US-PGPUB; USPAT; USOCR; FPRS; EPO; JPO; DERWENT; IBM_TDB)	OR	ON	ON	2020/05/27 10:05 AM
L480	191	point near contact with (rear back) and ("SiO.sub.2" silica passivat$4) same (reflect$4 mirror) and (photovoltaic solar near2 (Cell battery module panel) photoelectric photocell photo?cell).ab.	(US-PGPUB; USPAT; USOCR; FPRS; EPO; JPO; DERWENT; IBM_TDB)	OR	ON	ON	2020/05/27 10:06 AM
L481	98	"7388147"	(US-PGPUB; USPAT; USOCR; FPRS; EPO; JPO; DERWENT; IBM_TDB)	OR	ON	ON	2020/05/27 10:29 AM
L482	89	("20030160026" | "4234352" | "4478879" | "4557037" | "4920639" | "4927770" | "5053083" | "5151168" | "5310699" | "6551931" | "6638688").PN. OR ("7388147").URPN.	(US-PGPUB; USPAT; USOCR)	OR	ON	ON	2020/05/27 10:30 AM
L483	611	edge near isolation and (photovoltaic solar near2 (Cell battery module panel) photoelectric photocell photo?cell).ab.	(US-PGPUB; USPAT; USOCR; FPRS; EPO; JPO; DERWENT; IBM_TDB)	OR	ON	ON	2020/05/27 11:54 AM
L484	269	edge near isolation same (cut$3 saw$3 laser scribe) and (photovoltaic solar near2 (Cell battery	(US-PGPUB; USPAT; USOCR; FPRS; EPO; JPO; DERWENT; IBM_TDB)	OR	ON	ON	2020/05/27 11:56 AM

		module panel) photoelectric photocell photo?cell).ab.					
L485	67	"4726850"	(US-PGPUB; USPAT; USOCR; FPRS; EPO; JPO; DERWENT; IBM_TDB)	OR	ON	ON	2020/05/27 11:58 AM
L486	16	"02103810"	(US-PGPUB; USPAT; USOCR; FPRS; EPO; JPO; DERWENT; IBM_TDB)	OR	ON	ON	2020/05/27 11:59 AM
L487	8	"20080121266"	(US-PGPUB; USPAT; USOCR; FPRS; EPO; JPO; DERWENT; IBM_TDB)	OR	ON	ON	2020/05/27 12:31 PM
L488	47	(H01L31/0236 H01L31/0745 H01L31/1804 H01L31/022425 H01L31/068 H01L31/182 H01L31/056).cpc. and (Y02E10/52 Y02P70/521 Y02E10/547).cpc. and (polysilicon polycrystalline) near emitter and tunnel$3 near oxide	(US-PGPUB; USPAT; USOCR; FPRS; EPO; JPO; DERWENT; IBM_TDB)	OR	ON	ON	2020/05/27 12:52 PM
L489	242	((("COUSINS") near3 ("Peter"))).INV.	(US-PGPUB; USPAT; USOCR; EPO; JPO; DERWENT)	OR	ON	ON	2020/05/27 01:32 PM
L490	13	L489 and texture and antireflective and emitter	(US-PGPUB; USPAT; USOCR)	OR	ON	ON	2020/05/27 01:32 PM
L491	52	(point) near5 contact with (dot) and H01L31$.cpc.	(US-PGPUB; USPAT; USOCR; FPRS; EPO; JPO; DERWENT; IBM_TDB)	OR	ON	ON	2020/10/05 01:35 PM
L492	4568	(point) near5 contact and H01L31$.cpc.	(US-PGPUB; USPAT; USOCR; FPRS; EPO; JPO; DERWENT; IBM_TDB)	OR	ON	ON	2020/10/05 01:36 PM
L493	1299	(point) near5 contact and (circle dot spherical) and H01L31$.cpc.	(US-PGPUB; USPAT; USOCR; FPRS; EPO; JPO; DERWENT; IBM_TDB)	OR	ON	ON	2020/10/05 01:36 PM
L494	196	(point) near5 contact same (circle dot spherical) and H01L31$.cpc.	(US-PGPUB; USPAT; USOCR; FPRS; EPO; JPO; DERWENT; IBM_TDB)	OR	ON	ON	2020/10/05 01:37 PM
L495	92	(point) near5 contact with (circle dot spherical) and	(US-PGPUB; USPAT; USOCR; FPRS; EPO; JPO; DERWENT;	OR	ON	ON	2020/10/05 01:37 PM

		H01L31$.cpc.	IBM_TDB)				
L496	50	(H01L31/0236 H01L31/0745 H01L31/1804 H01L31/022425 H01L31/068 H01L31/182 H01L31/056).cpc. and (Y02E10/52 Y02P70/521 Y02E10/547).cpc. and (polysilicon polycrystalline) near emitter and tunnel$3 near oxide	(US-PGPUB; USPAT; USOCR; FPRS; EPO; JPO; DERWENT; IBM_TDB)	OR	ON	ON	2020/10/05 05:53 PM
L497	8	"20080121266"	(US-PGPUB; USPAT; USOCR; FPRS; EPO; JPO; DERWENT; IBM_TDB)	OR	ON	ON	2021/01/04 10:43 AM
L498	94	((US-20040112426-A1 OR US-20080121266-A1 OR US-20040063326-A1 OR US-20070186970-A1 OR US-20050268963-A1 OR US-20040097062-A1 OR US-20090101199-A1 OR US-20060196535-A1 OR US-20020153039-A1 OR US-20080223446-A1 OR US-20110104618-A1 OR US-20070151598-A1 OR US-20110162706-A1 OR US-20080092944-A1 OR US-20100000597-A1 OR US-20050017257-A1 OR US-20040003836-A1 OR US-20020142500-A1 OR US-20100186802-A1 OR US-20100087031-A1 OR US-20060255340-A1 OR US-20090142880-A1 OR US-20100186803-A1 OR US-20080216893-A1 OR US-20090301557-A1 OR US-20070137699-A1 OR US-20090205712-A1 OR US-20110139231-A1 OR US-20090183768-	(US-PGPUB; USPAT; USOCR; FIT (AU, AP, AT, BE, BG, BR, BY, CA, CH, CN, CS, CU, CZ, DD, DE, DK, EA, EE, EP, ES, FI, FR, GB, HR, HU, ID, IE, IL, IS, IT, JP, KR, LT, LU, LV, MA, OA, RU, SU, WO, MC, MD, MY, NL, NO, NZ, PH, PL, PT, RO, RS, SE, SG, SI, SK, TH, TN, TR, TW, UA, VN); FPRS; EPO; JPO; DERWENT; IBM_TDB)	OR	ON	ON	2023/01/17 11:08 PM

		A1 OR US-20090017606-A1 OR US-20060060238-A1 OR US-20070256728-A1 OR US-20100224238-A1 OR US-20070151599-A1 OR US-20080092951-A1 OR US-20050272175-A1).did. AND PGPB.dbnm.) OR ((US-7468485-B1 OR US-20090205712-A1 OR US-20080121279-A1 OR JP-07106611-A OR WO-03083955-A1 OR JP-2004247364-A OR US-20040200520-A1 OR US-5030295-A OR WO-2007082760-A1 OR WO-2007130188-A2).did. AND DWPI.dbnm.) OR ((US-7468485-B1 OR US-6071753-A OR US-5258077-A OR US-6262359-B1 OR US-5899704-A OR US-6210991-B1 OR US-5320684-A OR US-4665277-A OR US-4379944-A OR US-5792280-A OR US-8878053-B2 OR US-6998288-B1 OR US-6214743-B1 OR US-6624049-B1 OR US-4927770-A OR US-7633006-B1 OR US-5057439-A OR US-3961997-A OR US-8222516-B2 OR US-7838400-B2 OR US-7554031-B2 OR US-7858430-B2 OR US-5563092-A OR US-6407012-B1 OR US-5030295-A OR US-7566974-B2 OR US-5538564-A OR US-8207444-B2 OR US-4865999-A OR US-7943416-B2 OR US-7704352-B2 OR US-7388147-B2 OR US-6461947-B1 OR US-4989059-A OR US-6146483-A OR US-					

		6429037-B1 OR US-5759292-A OR US-5138256-A OR US-8207443-B2 OR US-5641362-A OR US-7029943-B2 OR US-4152824-A OR US-5738731-A OR US-6130380-A).did. AND USPT.dbnm.) OR ((WO-2009094578-A2 OR DE-102007035883-A1).did. AND EPAB.dbnm.) OR ((WO-2009094578-A3 OR WO-2009094578-A2).did. AND FPRS.dbnm.)				
L504	77	L495	(US-PGPUB; USPAT; USOCR)	OR	ON	ON	2023/01/17 11:11 PM
L505	231	L484	(US-PGPUB; USPAT; USOCR)	OR	ON	ON	2023/01/17 11:11 PM
L506	886	L505	(US-PGPUB; USPAT; USOCR; FIT (AU, AP, AT, BE, BG, BR, BY, CA, CH, CN, CS, CU, CZ, DD, DE, DK, EA, EE, EP, ES, FI, FR, GB, HR, HU, ID, IE, IL, IS, IT, JP, KR, LT, LU, LV, MA, OA, RU, SU, WO, MC, MD, MY, NL, NO, NZ, PH, PL, PT, RO, RS, SE, SG, SI, SK, TH, TN, TR, TW, UA, VN); FPRS; EPO; JPO; DERWENT; IBM_TDB)	OR	ON	ON	2023/01/18 02:20 AM
L507	1	"17870268"	(US-PGPUB; USPAT; USOCR; FIT (AU, AP, AT, BE, BG, BR, BY, CA, CH, CN, CS, CU, CZ, DD, DE, DK, EA, EE, EP, ES, FI, FR, GB, HR, HU, ID, IE, IL, IS, IT, JP, KR, LT, LU, LV, MA, OA, RU, SU, WO, MC, MD, MY, NL, NO, NZ, PH, PL, PT, RO, RS, SE, SG, SI, SK, TH, TN, TR, TW, UA, VN); FPRS; EPO; JPO; DERWENT; IBM_TDB)	OR	ON	ON	2023/01/18 12:20 PM
L508	4	"16460035"	(US-PGPUB; USPAT; USOCR; FIT (AU, AP,	OR	ON	ON	2023/01/18 12:20 PM

			AT, BE, BG, BR, BY, CA, CH, CN, CS, CU, CZ, DD, DE, DK, EA, EE, EP, ES, FI, FR, GB, HR, HU, ID, IE, IL, IS, IT, JP, KR, LT, LU, LV, MA, OA, RU, SU, WO, MC, MD, MY, NL, NO, NZ, PH, PL, PT, RO, RS, SE, SG, SI, SK, TH, TN, TR, TW, UA, VN); FPRS; EPO; JPO; DERWENT; IBM_TDB)				
L509	3	"16815844"	(US-PGPUB; USPAT; USOCR; FIT (AU, AP, AT, BE, BG, BR, BY, CA, CH, CN, CS, CU, CZ, DD, DE, DK, EA, EE, EP, ES, FI, FR, GB, HR, HU, ID, IE, IL, IS, IT, JP, KR, LT, LU, LV, MA, OA, RU, SU, WO, MC, MD, MY, NL, NO, NZ, PH, PL, PT, RO, RS, SE, SG, SI, SK, TH, TN, TR, TW, UA, VN); FPRS; EPO; JPO; DERWENT; IBM_TDB)	OR	ON	ON	2023/01/18 12:52 PM
L510	18	("20100112792"|"20070256728"|"20060130891"|"20060196535"|"20120055547"|"20100218821").PN.	(US-PGPUB; USPAT; USOCR; FIT (AU, AP, AT, BE, BG, BR, BY, CA, CH, CN, CS, CU, CZ, DD, DE, DK, EA, EE, EP, ES, FI, FR, GB, HR, HU, ID, IE, IL, IS, IT, JP, KR, LT, LU, LV, MA, OA, RU, SU, WO, MC, MD, MY, NL, NO, NZ, PH, PL, PT, RO, RS, SE, SG, SI, SK, TH, TN, TR, TW, UA, VN); FPRS; EPO; JPO; DERWENT; IBM_TDB)	OR	ON	ON	2023/01/18 12:54 PM
L511	11	"20060130891"	(US-PGPUB; USPAT; USOCR; FIT (AU, AP, AT, BE, BG, BR, BY, CA, CH, CN, CS, CU, CZ, DD, DE, DK, EA, EE, EP, ES, FI, FR, GB, HR, HU, ID, IE, IL, IS, IT, JP, KR, LT, LU, LV, MA, OA, RU, SU, WO, MC, MD, MY, NL, NO, NZ, PH, PL, PT, RO,	OR	ON	ON	2023/01/18 01:07 PM

			RS, SE, SG, SI, SK, TH, TN, TR, TW, UA, VN); FPRS; EPO; JPO; DERWENT; IBM_TDB)				
L512	95	((US-20060130891-A1 OR US-20040112426-A1 OR US-20080121266-A1 OR US-20040063326-A1 OR US-20070186970-A1 OR US-20050268963-A1 OR US-20040097062-A1 OR US-20090101199-A1 OR US-20060196535-A1 OR US-20020153039-A1 OR US-20080223446-A1 OR US-20110104618-A1 OR US-20070151598-A1 OR US-20110162706-A1 OR US-20080092944-A1 OR US-20100000597-A1 OR US-20050017257-A1 OR US-20040003836-A1 OR US-20020142500-A1 OR US-20100186802-A1 OR US-20100087031-A1 OR US-20060255340-A1 OR US-20090142880-A1 OR US-20100186803-A1 OR US-20080216893-A1 OR US-20090301557-A1 OR US-20070137699-A1 OR US-20090205712-A1 OR US-20110139231-A1 OR US-20090183768-A1 OR US-20090017606-A1 OR US-20060060238-A1 OR US-20070256728-A1 OR US-20100224238-A1 OR US-20070151599-A1 OR US-20080092951-A1 OR US-20050272175-A1).did. AND PGPB.dbnm.) OR ((US-7468485-B1 OR US-	(US-PGPUB; USPAT; USOCR; FIT (AU, AP, AT, BE, BG, BR, BY, CA, CH, CN, CS, CU, CZ, DD, DE, DK, EA, EE, EP, ES, FI, FR, GB, HR, HU, ID, IE, IL, IS, IT, JP, KR, LT, LU, LV, MA, OA, RU, SU, WO, MC, MD, MY, NL, NO, NZ, PH, PL, PT, RO, RS, SE, SG, SI, SK, TH, TN, TR, TW, UA, VN); FPRS; EPO; JPO; DERWENT; IBM_TDB)	OR	ON	ON	2023/01/18 01:16 PM

		20090205712-A1 OR US-20080121279-A1 OR JP-07106611-A OR WO-03083955-A1 OR JP-2004247364-A OR US-20040200520-A1 OR US-5030295-A OR WO-2007082760-A1 OR WO-2007130188-A2).did. AND DWPI.dbnm.) OR ((US-7468485-B1 OR US-6071753-A OR US-5258077-A OR US-6262359-B1 OR US-5899704-A OR US-6210991-B1 OR US-5320684-A OR US-4665277-A OR US-4379944-A OR US-7838400-B2 OR US-5792280-A OR US-8878053-B2 OR US-6998288-B1 OR US-6214743-B1 OR US-6624049-B1 OR US-4927770-A OR US-7633006-B1 OR US-5057439-A OR US-3961997-A OR US-8222516-B2 OR US-7554031-B2 OR US-7858430-B2 OR US-5563092-A OR US-6407012-B1 OR US-5030295-A OR US-7566974-B2 OR US-5538564-A OR US-8207444-B2 OR US-4865999-A OR US-7943416-B2 OR US-7704352-B2 OR US-7388147-B2 OR US-6461947-B1 OR US-4989059-A OR US-6146483-A OR US-6429037-B1 OR US-5759292-A OR US-5138256-A OR US-8207443-B2 OR US-5641362-A OR US-7029943-B2 OR US-4152824-A OR US-5738731-A OR US-6130380-A).did. AND USPT.dbnm.) OR ((WO-2009094578-A2 OR DE-102007035883-					

		A1).did. AND EPAB.dbnm.) OR ((WO-2009094578-A3 OR WO-2009094578-A2).did. AND FPRS.dbnm.)					
L513	30	L512 AND thermal NEAR oxid$5	(US-PGPUB; USPAT; USOCR; FIT (AU, AP, AT, BE, BG, BR, BY, CA, CH, CN, CS, CU, CZ, DD, DE, DK, EA, EE, EP, ES, FI, FR, GB, HR, HU, ID, IE, IL, IS, IT, JP, KR, LT, LU, LV, MA, OA, RU, SU, WO, MC, MD, MY, NL, NO, NZ, PH, PL, PT, RO, RS, SE, SG, SI, SK, TH, TN, TR, TW, UA, VN); FPRS; EPO; JPO; DERWENT; IBM_TDB)	OR	ON	ON	2023/01/18 01:17 PM
L514	595	(front NEAR surface NEAR field FSF) AND (thermal NEAR oxid$5) SAME (nitride SiN$3)	(US-PGPUB; USPAT; USOCR; FIT (AU, AP, AT, BE, BG, BR, BY, CA, CH, CN, CS, CU, CZ, DD, DE, DK, EA, EE, EP, ES, FI, FR, GB, HR, HU, ID, IE, IL, IS, IT, JP, KR, LT, LU, LV, MA, OA, RU, SU, WO, MC, MD, MY, NL, NO, NZ, PH, PL, PT, RO, RS, SE, SG, SI, SK, TH, TN, TR, TW, UA, VN); FPRS; EPO; JPO; DERWENT; IBM_TDB)	OR	ON	ON	2023/01/18 01:36 PM
L515	438	(front NEAR surface NEAR field FSF) AND (thermal NEAR oxid$5) SAME (nitride SiN$3) AND (solar photoelectric photovoltaic).ab.	(US-PGPUB; USPAT; USOCR; FIT (AU, AP, AT, BE, BG, BR, BY, CA, CH, CN, CS, CU, CZ, DD, DE, DK, EA, EE, EP, ES, FI, FR, GB, HR, HU, ID, IE, IL, IS, IT, JP, KR, LT, LU, LV, MA, OA, RU, SU, WO, MC, MD, MY, NL, NO, NZ, PH, PL, PT, RO, RS, SE, SG, SI, SK, TH, TN, TR, TW, UA, VN); FPRS; EPO; JPO; DERWENT; IBM_TDB)	OR	ON	ON	2023/01/18 01:36 PM
L516	4	L498 AND busbar	(US-PGPUB; USPAT; USOCR; FIT (AU, AP,	OR	ON	ON	2023/01/18 03:30 PM

			AT, BE, BG, BR, BY, CA, CH, CN, CS, CU, CZ, DD, DE, DK, EA, EE, EP, ES, FI, FR, GB, HR, HU, ID, IE, IL, IS, IT, JP, KR, LT, LU, LV, MA, OA, RU, SU, WO, MC, MD, MY, NL, NO, NZ, PH, PL, PT, RO, RS, SE, SG, SI, SK, TH, TN, TR, TW, UA, VN); FPRS; EPO; JPO; DERWENT; IBM_TDB)				
L517	2	L498 AND bus?bar	(US-PGPUB; USPAT; USOCR; FIT (AU, AP, AT, BE, BG, BR, BY, CA, CH, CN, CS, CU, CZ, DD, DE, DK, EA, EE, EP, ES, FI, FR, GB, HR, HU, ID, IE, IL, IS, IT, JP, KR, LT, LU, LV, MA, OA, RU, SU, WO, MC, MD, MY, NL, NO, NZ, PH, PL, PT, RO, RS, SE, SG, SI, SK, TH, TN, TR, TW, UA, VN); FPRS; EPO; JPO; DERWENT; IBM_TDB)	OR	ON	ON	2023/01/18 03:30 PM
L518	97	((US-20060130891-A1 OR US-20040112426-A1 OR US-20080121266-A1 OR US-20040063326-A1 OR US-20070186970-A1 OR US-20050268963-A1 OR US-20040097062-A1 OR US-20090101199-A1 OR US-20060196535-A1 OR US-20020153039-A1 OR US-20070151598-A1 OR US-20090142880-A1 OR US-20080223446-A1 OR US-20110104618-A1 OR US-20110162706-A1 OR US-20080092944-A1 OR US-20100000597-A1 OR US-20050017257-A1 OR US-20040003836-A1 OR US-20020142500-A1 OR US-	(US-PGPUB; USPAT; USOCR; FIT (AU, AP, AT, BE, BG, BR, BY, CA, CH, CN, CS, CU, CZ, DD, DE, DK, EA, EE, EP, ES, FI, FR, GB, HR, HU, ID, IE, IL, IS, IT, JP, KR, LT, LU, LV, MA, OA, RU, SU, WO, MC, MD, MY, NL, NO, NZ, PH, PL, PT, RO, RS, SE, SG, SI, SK, TH, TN, TR, TW, UA, VN); FPRS; EPO; JPO; DERWENT; IBM_TDB)	OR	ON	ON	2023/01/18 03:32 PM

		20100186802-A1 OR US-20100087031-A1 OR US-20060255340-A1 OR US-20100186803-A1 OR US-20080216893-A1 OR US-20090301557-A1 OR US-20070137699-A1 OR US-20090205712-A1 OR US-20110139231-A1 OR US-20090183768-A1 OR US-20090017606-A1 OR US-20060060238-A1 OR US-20070256728-A1 OR US-20100224238-A1 OR US-20070151599-A1 OR US-20080092951-A1 OR US-20050272175-A1).did. AND PGPB.dbnm.) OR ((JP-2007281044-A OR JP-H0823109-A).did. AND FTDB.dbnm.) OR ((US-7468485-B1 OR US-20090205712-A1 OR US-20080121279-A1 OR JP-07106611-A OR WO-03083955-A1 OR JP-2004247364-A OR US-20040200520-A1 OR US-5030295-A OR WO-2007082760-A1 OR WO-2007130188-A2).did. AND DWPI.dbnm.) OR ((US-7468485-B1 OR US-6071753-A OR US-5258077-A OR US-6262359-B1 OR US-5899704-A OR US-6210991-B1 OR US-5320684-A OR US-4665277-A OR US-4379944-A OR US-7838400-B2 OR US-6624049-B1 OR US-5792280-A OR US-8878053-B2 OR US-6998288-B1 OR US-6214743-B1 OR US-4927770-A OR US-7633006-B1 OR US-5057439-A OR US-3961997-A OR US-					

		8222516-B2 OR US-7554031-B2 OR US-7858430-B2 OR US-5563092-A OR US-6407012-B1 OR US-5030295-A OR US-7566974-B2 OR US-5538564-A OR US-8207444-B2 OR US-4865999-A OR US-7943416-B2 OR US-7704352-B2 OR US-7388147-B2 OR US-6461947-B1 OR US-4989059-A OR US-6146483-A OR US-6429037-B1 OR US-5759292-A OR US-5138256-A OR US-8207443-B2 OR US-5641362-A OR US-7029943-B2 OR US-4152824-A OR US-5738731-A OR US-6130380-A).did. AND USPT.dbnm.) OR ((WO-2009094578-A2 OR DE-102007035883-A1).did. AND EPAB.dbnm.) OR ((WO-2009094578-A3 OR WO-2009094578-A2).did. AND FPRS.dbnm.)					
L519	11	"20080121266"	(US-PGPUB; USPAT; USOCR; FIT (AU, AP, AT, BE, BG, BR, BY, CA, CH, CN, CS, CU, CZ, DD, DE, DK, EA, EE, EP, ES, FI, FR, GB, HR, HU, ID, IE, IL, IS, IT, JP, KR, LT, LU, LV, MA, OA, RU, SU, WO, MC, MD, MY, NL, NO, NZ, PH, PL, PT, RO, RS, SE, SG, SI, SK, TH, TN, TR, TW, UA, VN); FPRS; EPO; JPO; DERWENT; IBM_TDB)	OR	ON	ON	2023/01/18 03:37 PM
L520	9	"12070742"	(US-PGPUB; USPAT; USOCR; FIT (AU, AP, AT, BE, BG, BR, BY, CA, CH, CN, CS, CU, CZ, DD, DE, DK, EA, EE, EP, ES, FI, FR, GB, HR, HU, ID, IE, IL, IS,	OR	ON	ON	2023/01/18 04:05 PM

			IT, JP, KR, LT, LU, LV, MA, OA, RU, SU, WO, MC, MD, MY, NL, NO, NZ, PH, PL, PT, RO, RS, SE, SG, SI, SK, TH, TN, TR, TW, UA, VN); FPRS; EPO; JPO; DERWENT; IBM_TDB)				
L521	747	((("SUNPOWER") near3 ("CORPORATION"))).AS,AANM.	(USPAT)	OR	ON	ON	2023/01/18 04:34 PM
L522	268	((("COUSINS") near3 ("Peter"))).INV.	(US-PGPUB; USPAT; USOCR; EPO; JPO; DERWENT)	OR	ON	ON	2023/01/18 04:34 PM
L523	159	(L521 L522) AND L457	(US-PGPUB; USPAT; USOCR; FIT (AU, AP, AT, BE, BG, BR, BY, CA, CH, CN, CS, CU, CZ, DD, DE, DK, EA, EE, EP, ES, FI, FR, GB, HR, HU, ID, IE, IL, IS, IT, JP, KR, LT, LU, LV, MA, OA, RU, SU, WO, MC, MD, MY, NL, NO, NZ, PH, PL, PT, RO, RS, SE, SG, SI, SK, TH, TN, TR, TW, UA, VN); FPRS; EPO; JPO; DERWENT; IBM_TDB)	OR	ON	ON	2023/01/18 04:35 PM
L524	90	(L521 L522) AND L457	(US-PGPUB; USPAT)	OR	ON	ON	2023/01/18 04:35 PM
L525	97	((US-20060130891-A1 OR US-20080121266-A1 OR US-20050268963-A1 OR US-20020153039-A1 OR US-20060196535-A1 OR US-20090101199-A1 OR US-20040097062-A1 OR US-20040112426-A1 OR US-20070186970-A1 OR US-20040063326-A1 OR US-20070151598-A1 OR US-20090142880-A1 OR US-20110104618-A1 OR US-20100000597-A1 OR US-20080092944-A1 OR US-20110162706-A1 OR US-20080223446-	(US-PGPUB; USPAT; USOCR; FIT (AU, AP, AT, BE, BG, BR, BY, CA, CH, CN, CS, CU, CZ, DD, DE, DK, EA, EE, EP, ES, FI, FR, GB, HR, HU, ID, IE, IL, IS, IT, JP, KR, LT, LU, LV, MA, OA, RU, SU, WO, MC, MD, MY, NL, NO, NZ, PH, PL, PT, RO, RS, SE, SG, SI, SK, TH, TN, TR, TW, UA, VN); FPRS; EPO; JPO; DERWENT; IBM_TDB)	OR	ON	ON	2024/01/31 11:52 AM

		A1 OR US-20100224238-A1 OR US-20070256728-A1 OR US-20060060238-A1 OR US-20080092951-A1 OR US-20070151599-A1 OR US-20100186803-A1 OR US-20060255340-A1 OR US-20100087031-A1 OR US-20100186802-A1 OR US-20020142500-A1 OR US-20040003836-A1 OR US-20090017606-A1 OR US-20090183768-A1 OR US-20110139231-A1 OR US-20090205712-A1 OR US-20050017257-A1 OR US-20070137699-A1 OR US-20090301557-A1 OR US-20080216893-A1 OR US-20050272175-A1).did. AND PGPB.dbnm.) OR ((JP-2007281044-A OR JP-H0823109-A).did. AND FTDB.dbnm.) OR ((US-4379944-A OR US-4665277-A OR US-5320684-A OR US-6210991-B1 OR US-5899704-A OR US-6262359-B1 OR US-5258077-A OR US-6071753-A OR US-7468485-B1 OR US-7838400-B2 OR US-6624049-B1 OR US-5792280-A OR US-8222516-B2 OR US-3961997-A OR US-5057439-A OR US-7633006-B1 OR US-4927770-A OR US-6214743-B1 OR US-6998288-B1 OR US-8878053-B2 OR US-5641362-A OR US-8207443-B2 OR US-5138256-A OR US-6130380-A OR US-5738731-A OR US-4152824-A OR US-					

		7029943-B2 OR US-6407012-B1 OR US-8207444-B2 OR US-5538564-A OR US-7566974-B2 OR US-5030295-A OR US-5563092-A OR US-7858430-B2 OR US-7554031-B2 OR US-4989059-A OR US-5759292-A OR US-6429037-B1 OR US-6146483-A OR US-6461947-B1 OR US-7388147-B2 OR US-7704352-B2 OR US-7943416-B2 OR US-4865999-A).did. AND USPT.dbnm.) OR ((US-7468485-B1 OR US-20090205712-A1 OR US-20080121279-A1 OR JP-07106611-A OR US-20040200520-A1 OR JP-2004247364-A OR WO-03083955-A1 OR WO-2007130188-A2 OR US-5030295-A OR WO-2007082760-A1).did. AND DWPI.dbnm.) OR ((WO-2009094578-A2 OR DE-102007035883-A1).did. AND EPAB.dbnm.) OR ((WO-2009094578-A2 OR WO-2009094578-A3).did. AND FPRS.dbnm.)					
L526	55	(L525) AND (polysilicon polycrystalline NEAR silicon)	(US-PGPUB; USPAT; USOCR; FIT (AU, AP, AT, BE, BG, BR, BY, CA, CH, CN, CS, CU, CZ, DD, DE, DK, EA, EE, EP, ES, FI, FR, GB, HR, HU, ID, IE, IL, IS, IT, JP, KR, LT, LU, LV, MA, OA, RU, SU, WO, MC, MD, MY, NL, NO, NZ, PH, PL, PT, RO, RS, SE, SG, SI, SK, TH, TN, TR, TW, UA, VN); FPRS; EPO; JPO; DERWENT; IBM_TDB)	OR	ON	ON	2024/01/31 11:52 AM
L527	97	((US-20060130891-A1 OR US-20080121266-	(US-PGPUB; USPAT; USOCR; FIT (AU, AP,	OR	ON	ON	2024/01/31 11:57 AM

		A1 OR US-20050268963-A1 OR US-20020153039-A1 OR US-20060196535-A1 OR US-20090101199-A1 OR US-20040097062-A1 OR US-20040112426-A1 OR US-20070186970-A1 OR US-20040063326-A1 OR US-20070151598-A1 OR US-20090142880-A1 OR US-20110104618-A1 OR US-20100000597-A1 OR US-20080092944-A1 OR US-20110162706-A1 OR US-20080223446-A1 OR US-20100224238-A1 OR US-20070256728-A1 OR US-20060060238-A1 OR US-20080092951-A1 OR US-20070151599-A1 OR US-20100186803-A1 OR US-20060255340-A1 OR US-20100087031-A1 OR US-20100186802-A1 OR US-20020142500-A1 OR US-20040003836-A1 OR US-20090017606-A1 OR US-20090183768-A1 OR US-20110139231-A1 OR US-20090205712-A1 OR US-20050017257-A1 OR US-20070137699-A1 OR US-20090301557-A1 OR US-20080216893-A1 OR US-20050272175-A1).did. AND PGPB.dbnm.) OR ((JP-2007281044-A OR JP-H0823109-A).did. AND FTDB.dbnm.) OR ((US-4379944-A OR US-4665277-A OR US-5320684-A OR US-6210991-B1 OR US-5899704-A OR US-6262359-B1 OR US-	AT, BE, BG, BR, BY, CA, CH, CN, CS, CU, CZ, DD, DE, DK, EA, EE, EP, ES, FI, FR, GB, HR, HU, ID, IE, IL, IS, IT, JP, KR, LT, LU, LV, MA, OA, RU, SU, WO, MC, MD, MY, NL, NO, NZ, PH, PL, PT, RO, RS, SE, SG, SI, SK, TH, TN, TR, TW, UA, VN); FPRS; EPO; JPO; DERWENT; IBM_TDB)				

		5258077-A OR US-6071753-A OR US-7468485-B1 OR US-7838400-B2 OR US-6624049-B1 OR US-5792280-A OR US-8222516-B2 OR US-3961997-A OR US-5057439-A OR US-7633006-B1 OR US-4927770-A OR US-6214743-B1 OR US-6998288-B1 OR US-8878053-B2 OR US-5641362-A OR US-8207443-B2 OR US-5138256-A OR US-6130380-A OR US-5738731-A OR US-4152824-A OR US-7029943-B2 OR US-6407012-B1 OR US-8207444-B2 OR US-5538564-A OR US-7566974-B2 OR US-5030295-A OR US-5563092-A OR US-7858430-B2 OR US-7554031-B2 OR US-4989059-A OR US-5759292-A OR US-6429037-B1 OR US-6146483-A OR US-6461947-B1 OR US-7388147-B2 OR US-7704352-B2 OR US-7943416-B2 OR US-4865999-A).did. AND USPT.dbnm.) OR ((US-7468485-B1 OR US-20090205712-A1 OR US-20080121279-A1 OR JP-07106611-A OR US-20040200520-A1 OR JP-2004247364-A OR WO-03083955-A1 OR WO-2007130188-A2 OR US-5030295-A OR WO-2007082760-A1).did. AND DWPI.dbnm.) OR ((WO-2009094578-A2 OR DE-102007035883-A1).did. AND EPAB.dbnm.) OR ((WO-2009094578-A2 OR WO-2009094578-A3).did. AND					

		FPRS.dbnm.)					
L528	62	("20020153039" OR "20030134469" OR "20040200520" OR "20050016585" OR "20050268963" OR "20060096635" OR "20060130891" OR "20060157103" OR "20060185716" OR "20070023081" OR "20070082206" OR "20070151599" OR "20070194399" OR "20070256728" OR "20080078444" OR "20080121266" OR "20080173347" OR "20080216893" OR "20090159111" OR "20090301557" OR "20110114171" OR "3961997" OR "4398054" OR "4427839" OR "4492743" OR "4525593" OR "4589191" OR "4665277" OR "4865999" OR "4900369" OR "4927770" OR "5030295" OR "5053083" OR "5057439" OR "5217539" OR "5266125" OR "5360990" OR "5369291" OR "5449626" OR "5479018" OR "5620904" OR "5641362" OR "5693578" OR "6135350" OR "6262359" OR "6274402" OR "6313395" OR "6333457" OR "6337283" OR "6379994" OR "6387726" OR "6423568" OR "6429037" OR "6524880" OR "6638788" OR "6998288" OR	(US-PGPUB; USPAT)	OR	ON	ON	2024/02/13 03:56 PM

		"7468485" OR "7633006" OR "7998863" OR "8207444" OR "8222516" OR "8878053").pn.					
L529	191	("4147563" | "4181538" | "4251285" | "4273950" | "4322571" | "4345967" | "4377901" | "4589191" | "5011565" | "5011567" | "5258077" | "5461002" | "5888890" | "5918140" | "5928438" | "6040019" | "6210991").pn. OR ("6429037").urpn. AND (PGPB | USPT | USOC).dbnm.	(US-PGPUB; USPAT; USOCR)	OR	ON	ON	2024/09/09 10:05 PM
L530	3	"20090308450"	(US-PGPUB; USPAT; USOCR; FIT (AU, AP, AT, BE, BG, BR, BY, CA, CH, CN, CS, CU, CZ, DD, DE, DK, EA, EE, EP, ES, FI, FR, GB, HR, HU, ID, IE, IL, IS, IT, JP, KR, LT, LU, LV, MA, OA, RU, SU, WO, MC, MD, MY, NL, NO, NZ, PH, PL, PT, RO, RS, SE, SG, SI, SK, TH, TN, TR, TW, UA, VN); FPRS; EPO; JPO; DERWENT; IBM_TDB)	OR	ON	ON	2024/09/09 10:14 PM
L531	0	"20090308450" AND 220 AND 230	(US-PGPUB; USPAT; USOCR; FIT (AU, AP, AT, BE, BG, BR, BY, CA, CH, CN, CS, CU, CZ, DD, DE, DK, EA, EE, EP, ES, FI, FR, GB, HR, HU, ID, IE, IL, IS, IT, JP, KR, LT, LU, LV, MA, OA, RU, SU, WO, MC, MD, MY, NL, NO, NZ, PH, PL, PT, RO, RS, SE, SG, SI, SK, TH, TN, TR, TW, UA, VN); FPRS; EPO; JPO; DERWENT; IBM_TDB)	OR	ON	ON	2024/09/09 10:15 PM
L532	0	"20090308450" AND 220 AND 230A	(US-PGPUB; USPAT; USOCR; FIT (AU, AP, AT, BE, BG, BR, BY, CA, CH, CN, CS, CU, CZ, DD, DE, DK, EA, EE, EP, ES, FI, FR, GB,	OR	ON	ON	2024/09/09 10:15 PM

			HR, HU, ID, IE, IL, IS, IT, JP, KR, LT, LU, LV, MA, OA, RU, SU, WO, MC, MD, MY, NL, NO, NZ, PH, PL, PT, RO, RS, SE, SG, SI, SK, TH, TN, TR, TW, UA, VN); FPRS; EPO; JPO; DERWENT; IBM_TDB)				
L533	0	"20090308450" AND 220	(US-PGPUB; USPAT; USOCR; FIT (AU, AP, AT, BE, BG, BR, BY, CA, CH, CN, CS, CU, CZ, DD, DE, DK, EA, EE, EP, ES, FI, FR, GB, HR, HU, ID, IE, IL, IS, IT, JP, KR, LT, LU, LV, MA, OA, RU, SU, WO, MC, MD, MY, NL, NO, NZ, PH, PL, PT, RO, RS, SE, SG, SI, SK, TH, TN, TR, TW, UA, VN); FPRS; EPO; JPO; DERWENT; IBM_TDB)	OR	ON	ON	2024/09/09 10:15 PM
L534	970	(high$2 NEAR dop$3) WITH (electrode contact) SAME (FSF BSF surface NEAR field)	(US-PGPUB; USPAT; USOCR; FIT (AU, AP, AT, BE, BG, BR, BY, CA, CH, CN, CS, CU, CZ, DD, DE, DK, EA, EE, EP, ES, FI, FR, GB, HR, HU, ID, IE, IL, IS, IT, JP, KR, LT, LU, LV, MA, OA, RU, SU, WO, MC, MD, MY, NL, NO, NZ, PH, PL, PT, RO, RS, SE, SG, SI, SK, TH, TN, TR, TW, UA, VN); FPRS; EPO; JPO; DERWENT; IBM_TDB)	OR	ON	ON	2024/09/09 10:26 PM
L535	45	(high$2 NEAR dop$3) WITH (electrode contact) SAME (FSF BSF surface NEAR field) SAME (round circular diameter)	(US-PGPUB; USPAT; USOCR; FIT (AU, AP, AT, BE, BG, BR, BY, CA, CH, CN, CS, CU, CZ, DD, DE, DK, EA, EE, EP, ES, FI, FR, GB, HR, HU, ID, IE, IL, IS, IT, JP, KR, LT, LU, LV, MA, OA, RU, SU, WO, MC, MD, MY, NL, NO, NZ, PH, PL, PT, RO, RS, SE, SG, SI, SK, TH, TN, TR, TW, UA, VN); FPRS; EPO; JPO; DERWENT;	OR	ON	ON	2024/09/09 10:26 PM

			IBM_TDB)				
L536	970	(high$2 NEAR dop$3) WITH (electrode contact) SAME (FSF BSF surface NEAR field)	(US-PGPUB; USPAT; USOCR; FIT (AU, AP, AT, BE, BG, BR, BY, CA, CH, CN, CS, CU, CZ, DD, DE, DK, EA, EE, EP, ES, FI, FR, GB, HR, HU, ID, IE, IL, IS, IT, JP, KR, LT, LU, LV, MA, OA, RU, SU, WO, MC, MD, MY, NL, NO, NZ, PH, PL, PT, RO, RS, SE, SG, SI, SK, TH, TN, TR, TW, UA, VN); FPRS; EPO; JPO; DERWENT; IBM_TDB)	OR	ON	ON	2024/09/09 10:28 PM
L537	565	(high$2 NEAR dop$3) WITH (electrode contact) WITH (FSF BSF surface NEAR field)	(US-PGPUB; USPAT; USOCR; FIT (AU, AP, AT, BE, BG, BR, BY, CA, CH, CN, CS, CU, CZ, DD, DE, DK, EA, EE, EP, ES, FI, FR, GB, HR, HU, ID, IE, IL, IS, IT, JP, KR, LT, LU, LV, MA, OA, RU, SU, WO, MC, MD, MY, NL, NO, NZ, PH, PL, PT, RO, RS, SE, SG, SI, SK, TH, TN, TR, TW, UA, VN); FPRS; EPO; JPO; DERWENT; IBM_TDB)	OR	ON	ON	2024/09/09 10:28 PM
L538	154	(high$2 NEAR dop$3) WITH (electrode contact) WITH (FSF BSF surface NEAR field)	(US-PGPUB; USPAT)	OR	ON	ON	2024/09/09 10:28 PM
L539	61	(high$2 NEAR dop$3) WITH (electrode contact) WITH (FSF front NEAR surface NEAR field)	(US-PGPUB; USPAT; USOCR; FIT (AU, AP, AT, BE, BG, BR, BY, CA, CH, CN, CS, CU, CZ, DD, DE, DK, EA, EE, EP, ES, FI, FR, GB, HR, HU, ID, IE, IL, IS, IT, JP, KR, LT, LU, LV, MA, OA, RU, SU, WO, MC, MD, MY, NL, NO, NZ, PH, PL, PT, RO, RS, SE, SG, SI, SK, TH, TN, TR, TW, UA, VN); FPRS; EPO; JPO; DERWENT; IBM_TDB)	OR	ON	ON	2024/09/09 10:29 PM
L540	23	"8878053"	(US-PGPUB; USPAT; USOCR; FIT (AU, AP,	OR	ON	ON	2024/09/09 10:40 PM

			AT, BE, BG, BR, BY, CA, CH, CN, CS, CU, CZ, DD, DE, DK, EA, EE, EP, ES, FI, FR, GB, HR, HU, ID, IE, IL, IS, IT, JP, KR, LT, LU, LV, MA, OA, RU, SU, WO, MC, MD, MY, NL, NO, NZ, PH, PL, PT, RO, RS, SE, SG, SI, SK, TH, TN, TR, TW, UA, VN); FPRS; EPO; JPO; DERWENT; IBM_TDB)				
L541	34	"1732145"	(US-PGPUB; USPAT; USOCR; FIT (AU, AP, AT, BE, BG, BR, BY, CA, CH, CN, CS, CU, CZ, DD, DE, DK, EA, EE, EP, ES, FI, FR, GB, HR, HU, ID, IE, IL, IS, IT, JP, KR, LT, LU, LV, MA, OA, RU, SU, WO, MC, MD, MY, NL, NO, NZ, PH, PL, PT, RO, RS, SE, SG, SI, SK, TH, TN, TR, TW, UA, VN); FPRS; EPO; JPO; DERWENT; IBM_TDB)	OR	ON	ON	2024/09/09 10:40 PM
L542	34	"1732142"	(US-PGPUB; USPAT; USOCR; FIT (AU, AP, AT, BE, BG, BR, BY, CA, CH, CN, CS, CU, CZ, DD, DE, DK, EA, EE, EP, ES, FI, FR, GB, HR, HU, ID, IE, IL, IS, IT, JP, KR, LT, LU, LV, MA, OA, RU, SU, WO, MC, MD, MY, NL, NO, NZ, PH, PL, PT, RO, RS, SE, SG, SI, SK, TH, TN, TR, TW, UA, VN); FPRS; EPO; JPO; DERWENT; IBM_TDB)	OR	ON	ON	2024/09/09 10:41 PM
L543	4	"34940138".fmid.	(US-PGPUB; USPAT; USOCR; FIT (AU, AP, AT, BE, BG, BR, BY, CA, CH, CN, CS, CU, CZ, DD, DE, DK, EA, EE, EP, ES, FI, FR, GB, HR, HU, ID, IE, IL, IS, IT, JP, KR, LT, LU, LV, MA, OA, RU, SU, WO, MC, MD, MY, NL, NO, NZ, PH, PL, PT, RO,	OR	ON	ON	2024/09/09 10:41 PM

			RS, SE, SG, SI, SK, TH, TN, TR, TW, UA, VN); FPRS; JPO)				
L544	250	point NEAR contact WITH dop$3 NEAR region AND (solar photovoltaic).ab.	(US-PGPUB; USPAT; USOCR; FIT (AU, AP, AT, BE, BG, BR, BY, CA, CH, CN, CS, CU, CZ, DD, DE, DK, EA, EE, EP, ES, FI, FR, GB, HR, HU, ID, IE, IL, IS, IT, JP, KR, LT, LU, LV, MA, OA, RU, SU, WO, MC, MD, MY, NL, NO, NZ, PH, PL, PT, RO, RS, SE, SG, SI, SK, TH, TN, TR, TW, UA, VN); FPRS; JPO)	OR	ON	ON	2024/09/09 10:44 PM
L545	48	point NEAR contact WITH dop$3 NEAR region AND (solar photovoltaic).ab.	(US-PGPUB; USPAT)	OR	ON	ON	2024/09/09 10:45 PM
L546	210	point NEAR contact WITH dop$3 NEAR region AND (solar photovoltaic).ab.	(FIT (AU, AP, AT, BE, BG, BR, BY, CA, CH, CN, CS, CU, CZ, DD, DE, DK, EA, EE, EP, ES, FI, FR, GB, HR, HU, ID, IE, IL, IS, IT, JP, KR, LT, LU, LV, MA, OA, RU, SU, WO, MC, MD, MY, NL, NO, NZ, PH, PL, PT, RO, RS, SE, SG, SI, SK, TH, TN, TR, TW, UA, VN); FPRS; EPO; JPO; DERWENT; IBM_TDB)	OR	ON	ON	2024/09/09 10:47 PM
L547	2	"17870268"	(US-PGPUB; USPAT; USOCR; FIT (AU, AP, AT, BE, BG, BR, BY, CA, CH, CN, CS, CU, CZ, DD, DE, DK, EA, EE, EP, ES, FI, FR, GB, HR, HU, ID, IE, IL, IS, IT, JP, KR, LT, LU, LV, MA, OA, RU, SU, WO, MC, MD, MY, NL, NO, NZ, PH, PL, PT, RO, RS, SE, SG, SI, SK, TH, TN, TR, TW, UA, VN); FPRS; EPO; JPO; DERWENT; IBM_TDB)	OR	ON	ON	2024/09/09 11:05 PM
L548	64	"8222516"	(US-PGPUB; USPAT; USOCR; FIT (AU, AP, AT, BE, BG, BR, BY, CA, CH, CN, CS, CU,	OR	ON	ON	2024/09/10 12:18 AM

			CZ, DD, DE, DK, EA, EE, EP, ES, FI, FR, GB, HR, HU, ID, IE, IL, IS, IT, JP, KR, LT, LU, LV, MA, OA, RU, SU, WO, MC, MD, MY, NL, NO, NZ, PH, PL, PT, RO, RS, SE, SG, SI, SK, TH, TN, TR, TW, UA, VN); FPRS; EPO; JPO; DERWENT; IBM_TDB)				
L549	191	((H01L31/0236 H01L31/0745 H01L31/1804 H01L31/022425 H01L31/068 H01L31/182 H01L31/056).cpc. AND (Y02E10/52 Y02P70/521 Y02E10/547).cpc. AND (polysilicon polycrystalline) NEAR emitter AND tunnel$3 NEAR oxide)	(US-PGPUB; USPAT; USOCR; FIT (AU, AP, AT, BE, BG, BR, BY, CA, CH, CN, CS, CU, CZ, DD, DE, DK, EA, EE, EP, ES, FI, FR, GB, HR, HU, ID, IE, IL, IS, IT, JP, KR, LT, LU, LV, MA, OA, RU, SU, WO, MC, MD, MY, NL, NO, NZ, PH, PL, PT, RO, RS, SE, SG, SI, SK, TH, TN, TR, TW, UA, VN); FPRS; EPO; JPO; DERWENT; IBM_TDB)	OR	ON	ON	2024/09/12 04:12 PM

PE2E SEARCH - Search History (Interference)

There are no Interference searches to show.