IPR2024-01039 and IPR2024-01040

Canadian Solar Inc. v. Maxeon Solar Pte Ltd.

Petitioner *Canadian Solar's* Demonstrative Exhibit

Hearing Date: October 15, 2025

Grounds, ’516 Patent

IPR2024-01039

Claims Challenged	35 U.S.C. §	References
9-11*	103	Meier, Okayasu, Borden, and Jordan
9-11*	103	Meier, Okayasu, Gan, Foglietti, and Jordan
9-12	103	Froitzheim and Gan
9-12	103	Froitzheim and Kwark
9-12	103	Froitzheim and Borden

*Canadian Solar preserves its collateral estoppel arguments for appeal

Grounds, ’053 Patent

IPR2024-01040

Claims Challenged	35 U.S.C. §	References
9–11, 14, 16–17, 19–20	103	Froitzheim and Gan
11–13, 15, 18	103	Froitzheim and Gan with Hartiti or Sivoththaman*
9–11, 14, 16–17, 19–20	103	Froitzheim and Kwark
11–13, 15, 18	103	Froitzheim and Kwark with Hartiti or Sivoththaman*

*Maxeon does not independently challenge the Hartiti or Sivoththaman references

Undisputed Issues

- Petitioner's proposed combinations meet all elements of claims 9-11 of the '516 Patent and all challenged claims of the '053 Patent
    - Only claim 12 of the '516 Patent is disputed
- The Hartiti or Sivoththaman references are appropriately combined with Petitioner's other references for the '053 Patent grounds
- Secondary considerations weigh in favor of obviousness
    - No commercial success
    - No unexpected results

Disputed Issues

- Froitzheim + Gan (-1039 Ground 3, -1040 Grounds 1-2)
  - Motivation to combine
  - Reasonable expectation of success
  - No teaching away
- Froitzheim + Kwark (-1039 Ground 4, -1040 Grounds 3-4)
  - Motivation to combine
  - Reasonable expectation of success
  - No teaching away
- Froitzheim + Borden (-1039 Ground 5)
  - Motivation to combine
- Froitzheim + Gan or Kwark or Borden (-1039 Grounds 3-5)
  - Claim 12

Institution Decision Correctly Found Motivation to Combine Froitzheim and Gan

Patent Owner does not challenge Petitioner's arguments and evidence regarding the reasons to combine Froitzheim and Gan. *See* Prelim. Resp. After reviewing Petitioner's undisputed evidence, including the relevant portions of the Banerjee declaration, we are persuaded that Petitioner has demonstrated sufficiently for purposes of institution that a person of ordinary skill in the art would have had reason to combine Froitzheim and Gan.

-1039, Paper No. 13 (Institution Decision) at 12

A POSITA Would Be Motivated to Combine Froitzheim and Gan

[0009] It is an object of the present invention to provide a new type of Si solar cell that shows improved stability and good efficiency.

Ex. 1006 (Froitzheim) at [0009]

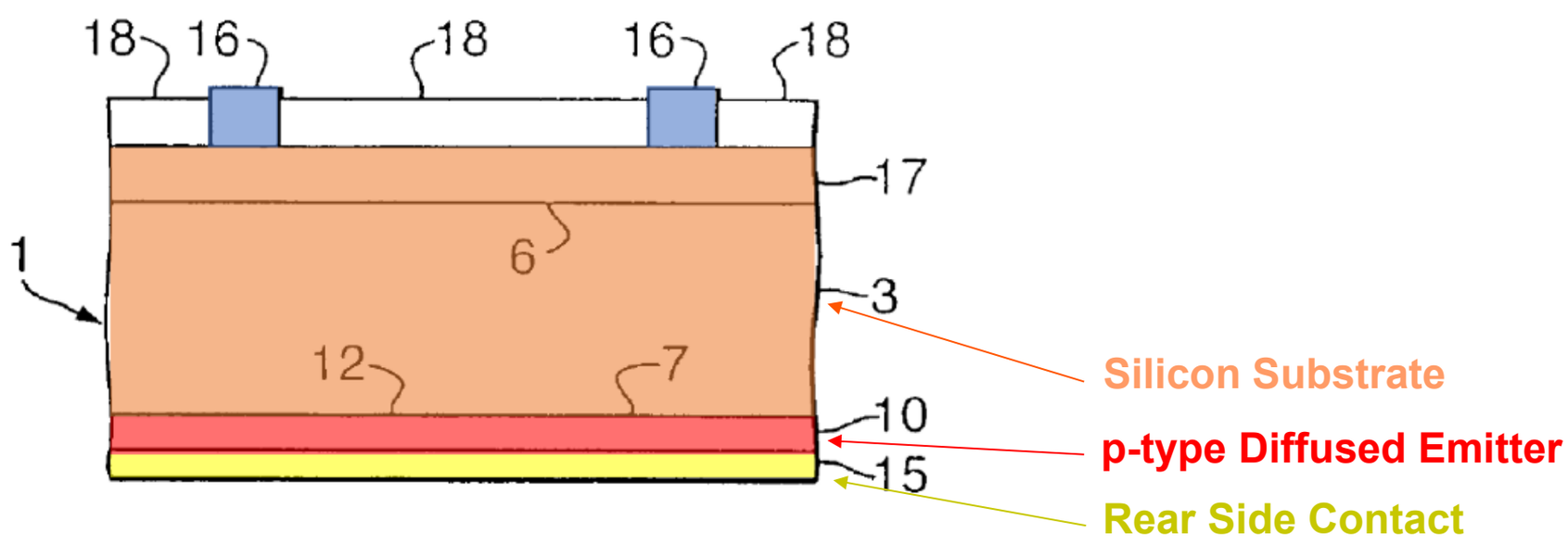

Ex. 1006 (Froitzheim) at Fig. 1 (annotated)

-1039, Pet. at 40-44; -1040, Pet. at 21, 31

A POSITA Would Be Motivated to Combine Froitzheim and Gan

With the extent of the oxide breakup between these two extremes, various combinations of ρ_c and J_o can be obtained. It is of particular interest to know the ρ_c and the corresponding J_o when only a small fraction of the interfacial oxide is broken. For silicon solar cells operated under high concentrated sunlight, the emitter recombination is one of the main recombination that limit the solar cell performance [8]. This is because the diffused-emitter, which is formed with dopant diffusion into the base (substrate), has high J_o ($=4.5 \times 10^{-13}$ A/cm^2). Consequently, the cell performance can be improved if the diffused-emitter is replaced with the polysilicon emitter, of which the J_o is less than 4.5×10^{-13} A/cm^2 and the ρ_c is low enough.

Ex. 1007 (Gan) at 245

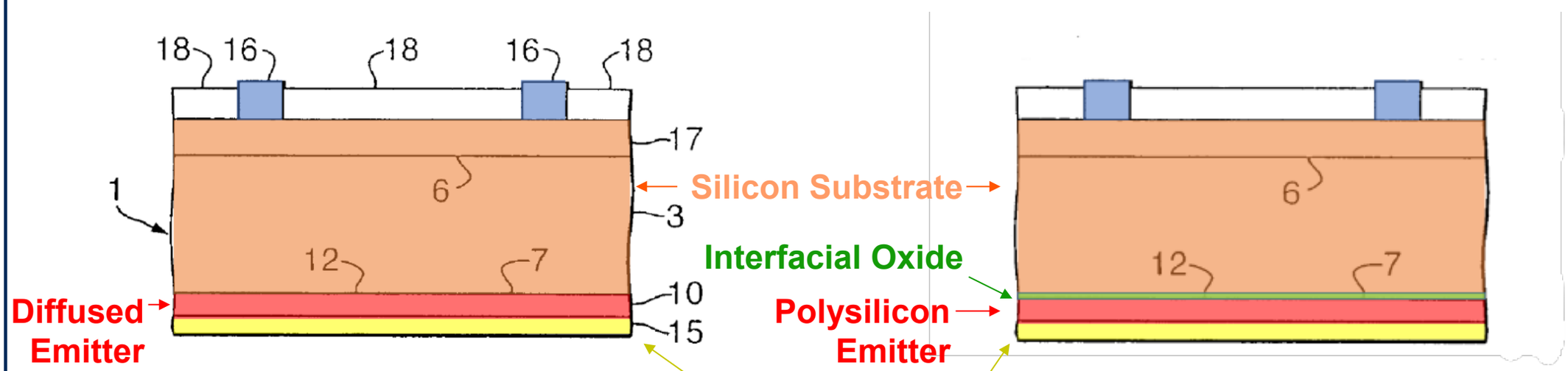

Ex. 1006 (Froitzheim) at Fig. 1 (annotated)

-1039, Pet. at 36-37, 40, 42; -1040, Pet. at 21, 23-24, 29; -1039 Reply at 2; -1040 Reply at 2

A POSITA Would Be Motivated to Combine Froitzheim and Gan

The data shown in Fig. 6 are quite useful for silicon solar cells. First, most of J_o are below 5×10^{-14} A/cm^2 which is about one order magnitude lower than that of diffused-emitters. Second, most of ρ_c are also lower than 5×10^{-5} Ω-cm^2. This means that the potential drop across the contact is negligible as long as the current density is less than 100 A/cm^2. It is interesting to see how much of the cell efficiency can be improved with polysilicon emitters of characteristics given here. With the cell modeling, which is similar to the one reported by Sinton [8], more than one absolute percent of the cell efficiency is obtained for a backside contact solar cell with polysilicon emitters with characteristics shown here (J_o=2×10^{-14} A/cm^2 for the n-type, J_o=3.5×10^{-14} A/cm^2 for the p-type, and ρ_c=1×10^{-5} Ω-cm^2 for both types).

Ex. 1007 (Gan) at 249

$\mu\Omega = 1 \times 10^{-6} \Omega$

Table 1: The effect of the second-step anneal on J_o and ρ_c.

	N-type		P-type	
	$J_{o,e}$ ($\times 10^{-14}$ A/cm^2)	ρ_c ($\mu\Omega$-cm^2)	$J_{o,e}$ ($\times 10^{-14}$ A/cm^2)	ρ_c ($\mu\Omega$-cm^2)
900 °C-4 hour	2.4	18	3.5	18
1000 °C-30 min	4.5	~ 6	8.2	3.8
1000 °C-60 min	7.9		10.5	

Ex. 1007 (Gan) at 248, Table 1; -1039 Ex. 2020 (Ruby Decl.) at ¶191; -1040 Ex. 2020 at ¶174

-1039, Pet. at 43-44, Reply at 2, 4-5; -1040, Pet. at 30-31, Reply at 2, 5

Gan's Teachings are Applicable to Solar Cells Generally

PHYSICAL PROPERTIES OF RT-LPCVD AND LPCVD POLYSILICON THIN FILMS: APPLICATION TO EMITTER SOLAR CELL.

M. Lemiti *, B. Semmache *, Q. N. Lê **, D. Barbier *, A.Laugier *

Polysilicon thin films are widely used in microelectronic technology, especially as contact-emitter in bipolar devices [1]. The interesting physical properties of this material allowed several investigations on polysilicon emitter solar cells [2,3,4]. From this litterature, it appeared that the tight control of polysilicon emitter properties, namely the thickness and the sheet resistance is necessary to avoid front surface recombination and consequently to preserve long minority carrier lifetimes.

Ex. 1048 (Lemiti) at 1375

[3]J.Y. Gan et al., " Polysilicon emitters for silicon concentrator solar cell", *IEEE Trans. Electron Devices*, Vol. ED-37, 1990, pp. 245-250.

Ex. 1048 (Lemiti) at 1378

-1039, Reply at 9; -1040, Reply at 9-10

Dr. Ruby Acknowledges Concentrator Art is Applicable to Non-Concentrator Solar Cells

Q So you would agree that if you're developing a 1-Sun solar cell, it might be worthwhile to look at publications regarding concentrator solar cells?

THE WITNESS: Well, it would be advisable or suggest -- you know, it would certainly be worth -- worth looking at, although not all of the methods for creating solar cells -- concentrator cells are required for producing 1-Sun cells. So some things would be of use and many things would not.

-1039 Ex. 1066, -1040 Ex. 1081 (Ruby Depo.) at 51:7-16

-1039, Reply at 10; -1040, Reply at 11

ID Correctly Found Reasonable Expectation of Success in Combining Froitzheim and Gan

48; Ex. 1003 ¶¶ 152–155; Ex. 1007, 246–247. On this record, this evidence provides sufficient support for Petitioner's argument that the proposed combination involves the use of a known technique from Gan to improve Froitzheim's solar cell, and could have been accomplished with a reasonable expectation of success.

Patent Owner's arguments to the contrary are unavailing. First, Patent Owner's argument regarding "no assurances" suggest that it is applying an incorrect standard on this issue. "Only a reasonable expectation of success, not absolute predictability, is necessary for a conclusion of obviousness." *In re Longi*, 759 F.2d 887, 896 (Fed. Cir. 1985). Second, Patent Owner directs us to evidence from the Gan Thesis, not Gan itself. Prelim. Resp. 41–42 (citing Ex. 2003). Patent Owner, however, does not direct us to sufficient evidence demonstrating when this reference became available to the public. Absent such evidence, we are unable to agree with Patent Owner's conclusion of what a person of ordinary skill in the art at the time of the invention would have understood based on the Gan Thesis.

-1039, Paper No. 13 (Institution Decision) at 14

ID Correctly Found Reasonable Expectation of Success in Combining Froitzheim and Gan

thicknesses, and that the Gan Thesis "provides no assurances that a consistent oxide layer thickness could be achieved." *Id.* at 13–15. However, under the proper inquiry, "obviousness cannot be avoided simply by a showing of some degree of unpredictability in the art so long as there was a reasonable probability of success." *Pfizer, Inc. v. Apotex, Inc.*, 480 F.3d 1348, 1364 (Fed. Cir. 2007). Patent Owner appears to argue for a heightened standard. Next, Patent Owner directs us to evidence from the Gan Thesis, *not* Gan itself. Prelim. Resp. 13–15 (citing Ex. 2003). And lastly, though the Gan Thesis acknowledges inconsistent oxide growth during "ramp-up" and "stand-by" periods, the Gan Thesis also explains that "it is possible that the thin-oxide growth can be improved by performing the oxidation at lower temperatures such that the oxidation rate can be controlled more precisely." Ex. 2003, 112.

Accordingly, we are persuaded that Petitioner has shown sufficiently at this stage of the proceeding that an ordinarily skilled artisan would have had a reasonable expectation of success in the combination of Froitzheim and Gan.

-1040, Paper No. 13 (Institution Decision) at 26

The Parties Agree on the Definition of a POSITA

IV. PERSON OF ORDINARY SKILL IN THE ART

The person of ordinary skill in the art in the 516 Patent's field of solar cell design or manufacture in 2008 ("Skilled Artisan") would have been someone with an advanced degree in electrical engineering, applied physics, chemistry, or materials science, and at least two years of experience designing, developing, or researching in the field. Alternatively, that person would have had a bachelor's degree in electrical engineering, applied physics, or materials science, and at least three years of experience designing, developing, or researching in the field.

-1039, Pet. at 3-4; -1040, Pet. at 4.

IV. THE LEVEL OF ORDINARY SKILL

Maxeon applies the level of ordinary skill in the art CSI proposes. Petition,

-1039, POR at 37; -1040, POR at 35.

Froitzheim and Gan Could Be Readily Combined

1. Field oxidation (2000 Å)*.
2. Polysilicon-substrate contact opening*.
3. Thin thermal oxide growth at 800 °C*. (10-minute oxygen flow)
4. Polysilicon deposition (6000 Å) and first-step anneal (1050 °C)*.
5. First-step anneal *.
6. Polysilicon finger definition.
7. Undoped glass deposition (2000 Å).
8. Metal-polysilicon and metal-substrate contact opening.
9. Doped glass deposition on both sides of the wafer*.
10. Drive-in; 900-1000 °C*.
11. Doped glass stripping and Al-1% Si alloy deposition.
12. Metal finger definition.

Ex. 1007 (Gan) at 246

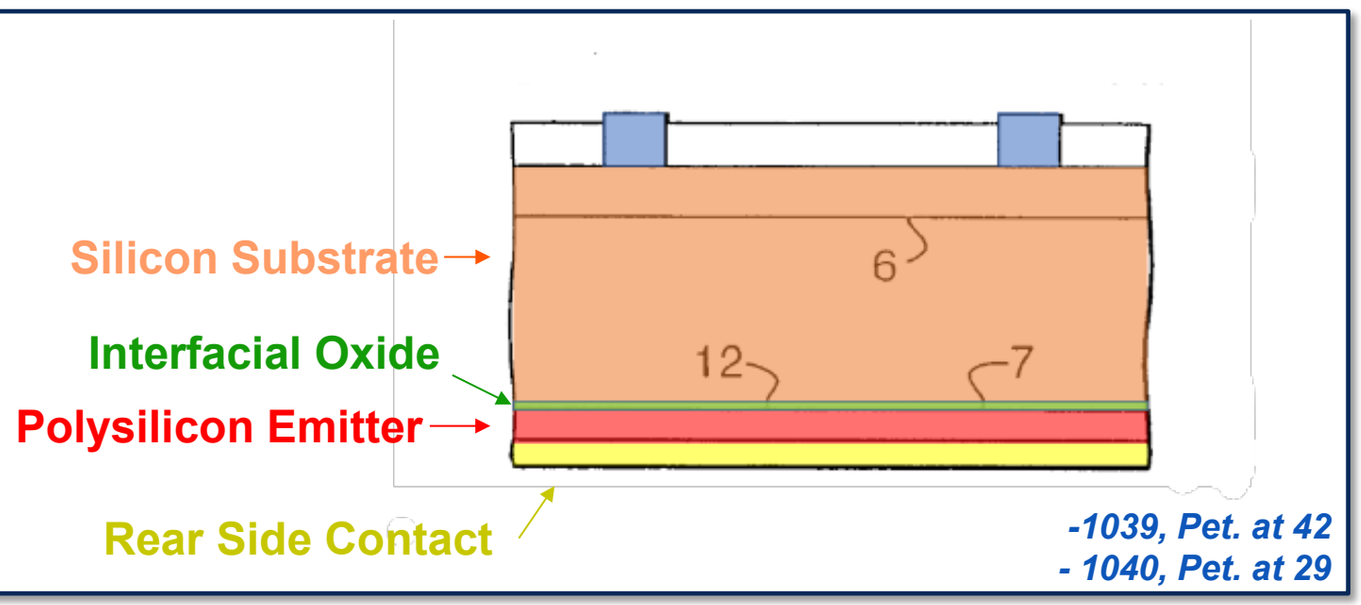

-1039, Pet. at 42
- 1040, Pet. at 29

-1039, Pet. at 47-48
-1039, POR at 12
-1040, Pet. at 28, 37
-1040, POR at 12-13

POSITA Could Reasonably Grow a Thin Thermal Oxide

The interfacial oxide must be thicker than 10 Å to be thermally and chemically stable and, thin enough not block dopant atoms, approximately less than 30 Å. Furthermore, for best transistor performance, the interfacial oxide must have a near-SiO_2 stoichiometry. For this range of oxide thickness, the oxidation kinetics must be greatly reduced. This can be achieved by reducing the oxidation temperature, pressure and by lowering the partial pressure of oxygen. Using SIMS, the oxidation kinetics of ultra-thin oxide films expressed as total integrated dose of oxygen is shown in Figure 4. For these samples, upon completion of the oxidation step, polysilicon caps were *in-situ* deposited.

-1039 Ex. 1063, -1040 Ex. 1078 (Kermani) at 570

Furthermore, thin oxide films were achieved taking into account the growth kinetics results obtained in our group by using a stagnant ambient of O_2 or N_2O with a 0.15 bar overpressure and a process temperature fixed in the 1000 °C-1200 °C [14]. From this study, it is noteworthy that the growth rate is greatly enhanced at the initial stage of Si oxidation. This fact is usually ascribed to a faster diffusion of oxidizing species through the very thin oxide layer. So, as suggested by Kermani et al. [6], it appears preferable in the future to work at a lower oxidation temperature and/or oxygen

Ex. 1048 (Lemiti) at 1376

-1039, Reply at 8-9; -1040, Reply at 9-10

Bipolar Transistor References are Relevant to Solar Cells

Q So is it fair, then, to apply the teachings of Foglietti to the solar cell context?

A It should be.

Q So would you agree that a person of ordinary skill in the art would look to bipolar transistor references as relevant to designing a solar cell?

A It could be relevant.

-1039 Ex. 1066, -1040 Ex. 1081 (Ruby Depo.) at 128:14-17

THERE have been a considerable number [1], [3] of reports recently on improved bipolar transistor emitters made of polycrystalline silicon or of SIPOS (a mixture of microcrystalline silicon and silicon dioxide). The improvement has come in the forward saturation current J_0, defined by $J = J_0 \exp\{qV/kT\}$. For example, we have recently made SIPOS heterojunction emitters with $J_0 = 10^{-14}$ Amps/cm^2 which is about two orders of magnitude smaller than in a conventional homojunction emitter. An equivalent figure of merit [4] is the "emitter Gummel number" $G_e = 3.3 \times 10^{15}$ s/cm^4 where $G_e = qn_i^2/J_0$ should be as large as possible. (Here q is the electronic charge and n_i is the intrinsic carrier density).

Such heterojunctions are valuable not only for emitter efficiency in bipolar transistors, but also for solar cells. A SIPOS:c-Si:SIPOS double heterostructure solar cell has recently [5] generated 720 mV at open circuit, which is a record for crystalline silicon.

Ex. 1016 (Yablonovitch) at 597

-1039, Pet. at 7-8, 45, 60, Reply at 10-11; -1040, Pet. at 15-16, 58, Reply at 10

Semiconductor References are Relevant to Solar Cells

Q Are the teachings of semiconductor materials and semiconductor science more generally applicable to the solar cell context?

A Yes, they are very applicable to solar cells because a very thorough understanding of semiconductor science is required to make efficient solar cells, which are themselves made out of a semiconductor material.

-1039 Ex. 1066, -1040 Ex. 1081 (Ruby Depo.) at 55:12-18

-1039, Reply at 6-7; -1040, Reply at 7-8

Dr. Ruby Agrees That a POSITA Would Have Known That Lowering Temperature Slows Growth of Oxide

Q So it was known prior to 2008 that lowering the temperature at which an oxide is formed will slow the growth of that oxide; right?

A Yes.

-1039 Ex. 1066, -1040 Ex. 1081 (Ruby Depo.) at 103:15-18

-1039, Reply at 8; -1040, Reply at 9

Dr. Ruby: POSITA Would Have Known That Concentrator Cells Demand Lower Contact Resistance than Non-Concentrator Cells

Q Is it true that concentrator solar cells require much lower contact resistance than non-concentrator solar cells?

A My answer is yes, that's true.

Q Why is that?

A Because they must handle a much higher current and because -- because of the higher currents, the resistances need to be lower in order to have lower voltage drops or what you would call ohmic resistance in the cell. Less energy wasted in resistance.

Q A person of ordinary skill in the art, prior to 2008, would have knowledge of the differences between concentrator solar cells and 1-Sun solar cells; right?

A Well, I did.

Q And you were a person of ordinary skill in the art prior to 2008; right?

A Yes, I would consider myself to be so.

-1039 Ex. 1066, -1040 Ex. 1081 (Ruby Depo.) at 46:10-47:1

-1039, Reply at 5, 11; -1040, Reply at 6, 11

POSITA Would Have Known How to Reduce Contact Resistance

Q What are some ways that you can reduce contact resistance in a solar cell?

A By doping the contact region of the silicon very heavily; a high concentration of dopant atoms.

Q Was that known before 2008?

A Yes.

Q Are you aware of any other ways to reduce contact resistance in a solar cell?

A Correct choice of metals for making contact with.

Q Was that known before 2008?

A Yes.

-1039 Ex. 1066, -1040 Ex. 1081 (Ruby Depo.) at 47:2-13

-1039, Reply at 20-21; -1040, Reply at 21

POSITA Would Have Known How to Reduce Contact Resistance

Q In a solar cell with an interfacial oxide, if you reduce the thickness of the interfacial oxide, will that lower the contact resistance?

A Yes.

Q Was that known prior to 2008?

A Yes.

Q If you increase the contact area, is that another way to reduce the contact resistance?

A Yeah. It reduces the specific contact resistivity, which is contact resistance per unit area. So, yes, it reduces the contact resistance, but the -- the specific contact resistivity remains the same.

Q Understood. Was that known prior to 2008?

A Yes.

-1039 Ex. 1066, -1040 Ex. 1081 (Ruby Depo.) at 47:17-48:5

-1039, Reply at 20-21; -1040, Reply at 21

Froitzheim and Gan Do Not Teach Away From Each Other

1. Field oxidation (2000 Å)*.
2. Polysilicon-substrate contact opening*.
3. Thin thermal oxide growth at 800 °C*. (10-minute oxygen flow)
4. Polysilicon deposition (6000 Å) and first-step anneal (1050 °C)*.
5. First-step anneal *.
6. Polysilicon finger definition.
7. Undoped glass deposition (2000 Å).
8. Metal-polysilicon and metal-substrate contact opening.
9. Doped glass deposition on both sides of the wafer*.
10. Drive-in; 900-1000 °C*.
11. Doped glass stripping and Al-1% Si alloy deposition.
12. Metal finger definition.

Ex. 1007 (Gan) at 246

Q Driving in dopants at a temperature from 900 to 1000 degrees Celsius would be consistent with what's disclosed in Froitzheim; right?

A Between 900 and 1000, yes.

-1039 Ex. 1066, -1040 Ex. 1081 (Ruby Depo.) at 76:9-12.

-1039 POR at 43-44; -1039, Reply at 2-3
-1040 POR at 45; -1040, Reply at 2-3

ID Correctly Found Motivation to Combine Froitzheim and Kwark

Once again, on this record, we disagree with Patent Owner's conclusion. Although Figure 4 in Kwark may show higher temperature annealing reduces the effects of an oxide layer, it appears to suggest that polysilicon emitters with an oxide layer ("with Chemox") still show improved performance (i.e., lower J_{oe} values) over polysilicon emitters without an oxide layer ("No Chemox"). Ex. 1008, Fig. 4. Additionally, to the extent Gan's teachings are relevant to this challenge, despite Gan's data showing the effect of annealing temperature on the oxide layer, Gan states that "the cell performance can be improved if the diffused-emitter is replaced with the polysilicon emitter" and "polysilicon emitters . . . with a very small fraction of interfacial oxide breakup" can be obtained. Ex. 1007, 245, 249.

Accordingly, on this record, we are persuaded by Petitioner's arguments and evidence, and determine that Petitioner has demonstrated sufficiently for purposes of this Decision that a person of ordinary skill in the art would have had a reason to combine the teachings of Froitzheim and Kwark, and would have had a reasonable expectation of success in achieving the claimed invention.

-1039, Paper No. 13 (Institution Decision) at 19

A POSITA Would Be Motivated to Combine Froitzheim and Kwark

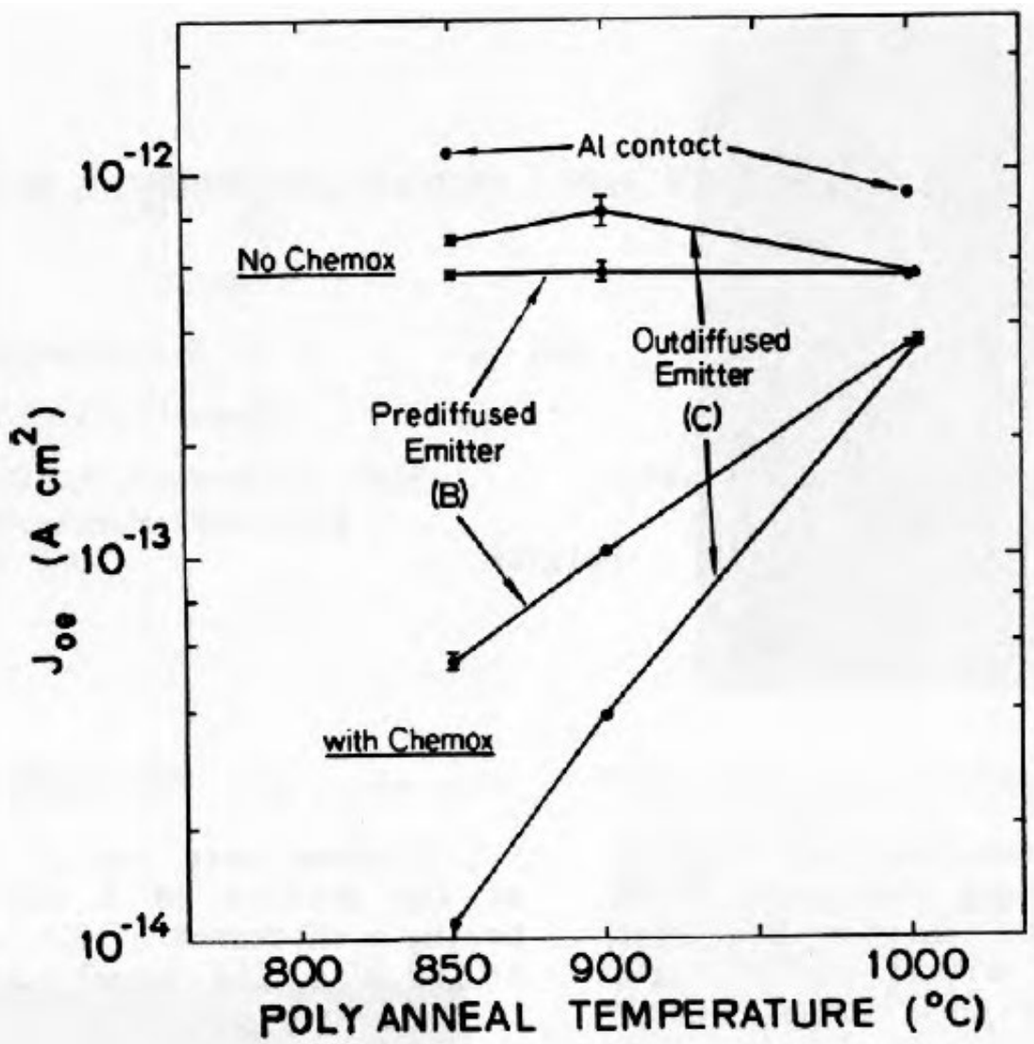

Fig. 4: emitter saturation current for POLY contacts with and without a chemically grown interfacial layer vs. anneal temperature. Thicknesses range from 3000-3600 angstroms. Note the large difference when the interfacial oxide is missing.

Ex. 1008 (Kwark) at Fig. 4

junction. For both structures, devices were prepared with and without a chemically grown oxide (chemox) by dipping half of the wafer which underwent a full RCA clean in dilute HF. The value for emitter B with a conventional aluminum contact is shown for reference. Addition of POLY without the chemox does not greatly impact J_{oe} as would be expected since the heavily doped POLY acts essentially as an extension of the monocrystalline emitter. Addition of the chemox greatly decreases the J_{oe} as has been previously reported (6). "Prediffused" emitter B displays a baseline J_{oe}

Ex. 1008 (Kwark) at 743

-1039, Pet. at 58-60; -1040, Pet. at 26-27, 58-59

A POSITA Would Be Motivated to Combine Froitzheim and Kwark

to 1000°C adversly affected J_{oe}. That the $\gamma=0$ films produced such good results was surprising since POLY films of comparble thickness should yield a J_{oe} an order of magnitude larger. In fact it was discovered that these $\gamma = 0$ films

Ex. 1008 (Kwark) at 742

them interesting for electronic applications (2). Incorporation of these films into the emitter structure of an NPN bipolar transistor had been found to reduce the emitter saturation current fifty fold (3); this translates into potential improvements of energy conversion efficiency for solar cells and enhanced high frequency performance of bipolar structures.

Ex. 1008 (Kwark) at 742

-1039, Pet. at 58-60; -1040, Pet. at 26-27, 58-59

Kwark Teaching Is Compatible With Froitzheim and Showed Benefits From 900-1000ºC

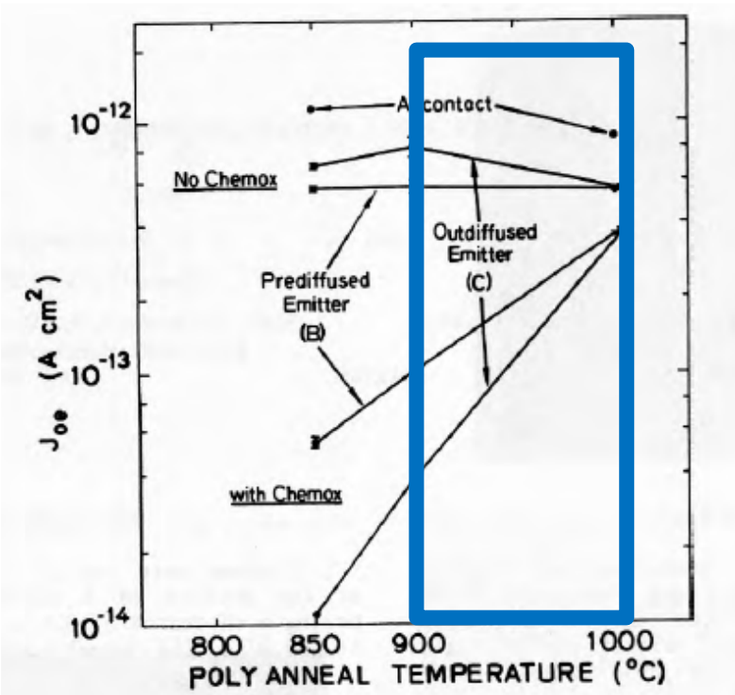

Fig. 4: emitter saturation current for POLY contacts with and without a chemically grown interfacial layer vs. anneal temperature. Thicknesses range from 3000-3600 angstroms. Note the large difference when the interfacial oxide is missing.

Ex. 1008 (Kwark) at Fig. 4

Maxeon's Expert, Dr. Ruby:

Q Driving in dopants at a temperature from 900 to 1000 degrees Celsius would be consistent with what's disclosed in Froitzheim; right?

A Between 900 and 1000, yes.

-1039 Ex. 1066, -1040 Ex. 1081 (Ruby Depo.) at 76:9-12.

-1039, Reply at 17-18
-1040, Reply at 16-17

Dr. Ruby Agrees Kwark showed Lower Recombination At and Above 900ºC With Chemox

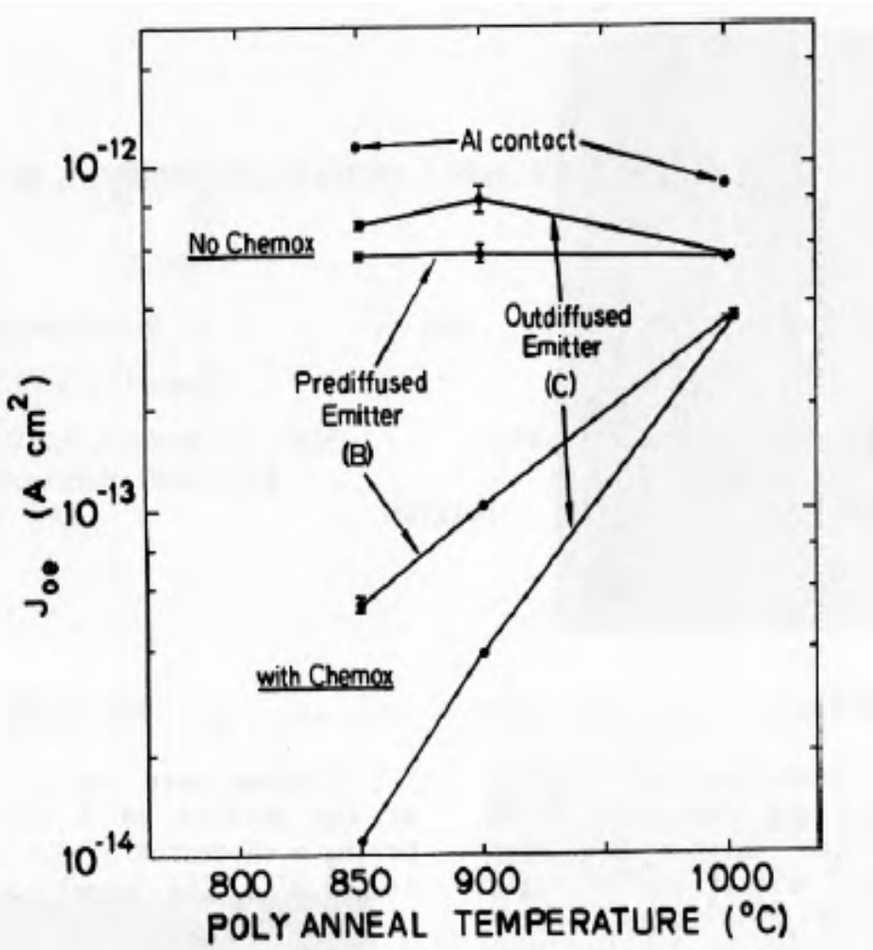

Fig. 4: emitter saturation current for POLY contacts with and without a chemically grown interfacial layer vs. anneal temperature. Thicknesses range from 3000-3600 angstroms. Note the large difference when the interfacial oxide is missing.

Ex. 1008 (Kwark) at Fig. 4

Even at 1000 degrees Celsius anneal temperature, the "With Chemox" samples have a lower recombination than the "No Chemox" samples; right?

A A small amount, yes, that's correct.

Q At 1000 degrees anneal temperature, the "With Chemox" samples have a lower recombination than the aluminum contact diffused emitter; right?

A Yes.

-1039 Ex. 1066, -1040 Ex. 1081 (Ruby Depo.) at 84:18-25

-1039, Reply at 17-18; -1040, Reply at 17-18

Dr. Ruby: Recombination Is Lower With Chemox Even at 1000°C In Kwark

Even at 1000 degrees Celsius anneal temperature, the "With Chemox" samples have a lower recombination than the "No Chemox" samples; right?

A A small amount, yes, that's correct.

Q At 1000 degrees anneal temperature, the "With Chemox" samples have a lower recombination than the aluminum contact diffused emitter; right?

A Yes.

-1039 Ex. 1066, -1040 Ex. 1081 (Ruby Depo.) at 84:18-84:25

-1039, Reply at 17; -1040, Reply at 17

ID Correctly Found A Reasonable Expectation of Success in Combining Froitzheim and Kwark

Accordingly, on this record, we are persuaded by Petitioner's arguments and evidence, and determine that Petitioner has demonstrated sufficiently for purposes of this Decision that a person of ordinary skill in the art would have had a reason to combine the teachings of Froitzheim and Kwark, and would have had a reasonable expectation of success in achieving the claimed invention.

-1039, Paper No. 13 (Institution Decision) at 19

Froitzheim and Kwark Could Have Been Readily Combined

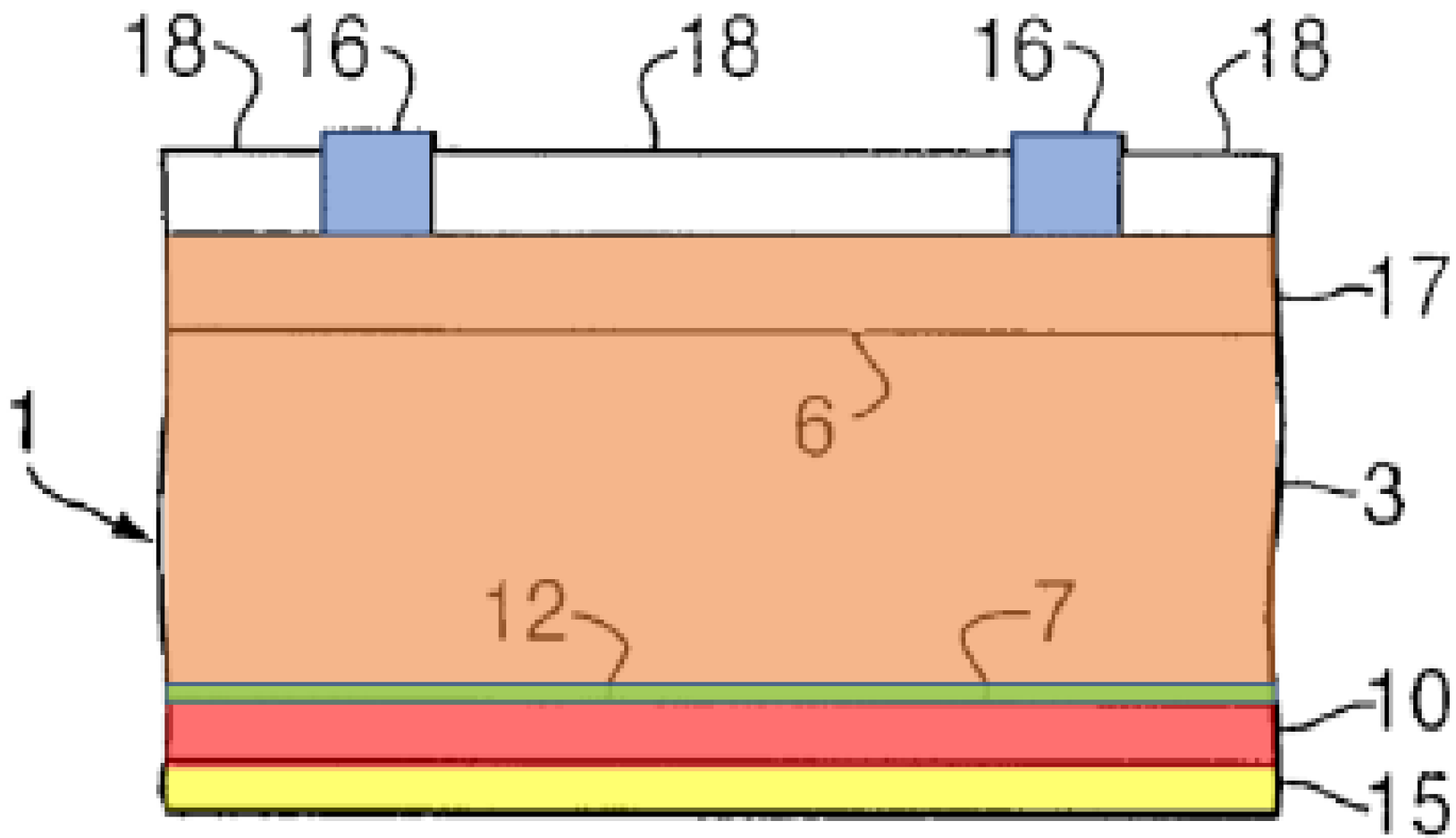

Froitzheim's emitter 10 becomes polysilicon emitter (red) with interfacial oxide (green) based on Kwark

-1039, Ex. 1003 (Banerjee Decl.) at 90

-1039, Pet. at 63-64
-1040, Pet. at 57-58, 28-29

Froitzheim/Kwark's One-Sun Solar Cell Allows for Higher Contact Resistance

Maxeon relies on contact resistance requirements for ***concentrator*** cells 4×10^{-4} Ω-cm^2

Further, the Gan Thesis disparages the use of Chemox. EX2020, ¶224. The Gan Thesis explains "[a]s mentioned previously, a very low J_o can be obtained (see Figure 3.6) for the N-type polysilicon SIS emitter with a chemically grown interfacial oxide. However, the corresponding ρ_c of such a device can be as high as 4×10^{-4} Ω-cm^2 at the doping concentration of 1×10^{20} cm^{-3}, which is the typical doping concentration of the emitter. This is four times higher than the value mentioned in the previous chapter as our goal, and the potential drop across the polysilicon emitter would be **intolerable**." EX2003, 58 (39 in original) (emphasis

-1039, POR at 60; see also -1040, POR at 56-57

Maxeon's expert, Dr. Ruby, explains that contact resistance requirement of **one-sun non-concentrator** solar cells is 1×10^{-2} ohm-cm^2

64. A high ρ_c results in excessive loss of power and lower efficiency. Total series resistance for one-sun cells such as described in the '516 patent typically needs to be less than 1 ohm-cm^2. Back contact resistance typically makes up about 1% of this, so it should be less than 1×10^{-2} ohm-cm^2. This is only one component of total series resistance, and all need to be optimized simultaneously along with allowing maximum light collection at the front surface to maximize cell efficiency. This involves several tradeoffs and careful optimization.

Ex. 2020 (Ruby Decl.) at ¶64

4×10^{-4} Ω-cm^2 <<<< 1×10^{-2} ohm-cm^2

-1039, Reply at 20; -1040, Reply at 19-20

Dr. Banerjee: Chemox Growth Has Long Been A Mature Science

A So it's very standard procedure to clean silicon wafers with this so-called RCA clean, which, by the way, I've been using for 30, 40 years. And an outcome of that cleaning process is you will end up growing this chemical oxide on the surface. So that's what they are using in this particular example.

And for the control case of no chemical oxide, they are etching off this chemical oxide with hydrofluoric acid, HF. But in other art they use the UV ozone technique that I described a few minutes earlier.

Ex. 2023 (Banerjee Depo.) at 57:3-14

-1039, Reply at 16-17; -1040, Reply at 15

Chemox Growth Has Long Been a Mature Science

The RCA process, developed by Kern and Puotinen [1,2], is still widely used in semiconductor industry for the surface cleaning of silicon wafers. New improvements are continually developed aiming at a better cleaning efficiency, a lower cost, and a strict control of the environmental regulations [3,4]. After removal of the native oxide with a HF treatment, the resulting Si–H_x hydrophobic surface is successively treated in an alkaline ammonia–hydrogen peroxide mixture called SC1, to oxidize the organic contaminants and generate a thin chemical oxide layer which repels all inorganic particles from the surface by setting the zeta potential of both the surface and the particles. In the next step, an acidic HCl–hydrogen peroxide mixture called SC2 allows the metallic contaminants to be dissolved as complex species and excluded from the surface. The pH value of these solutions is the determining

[1] W. Kern, D.A. Puotinen, RCA Rev. 31 (1970) 186.

-1039, Ex. 1064; -1040 Ex. 1079 (Petitdidier) at 51, 58

-1039, Reply at 21 (citing Ex. 1067, ¶39); -1039 Sur-Reply at 21
-1040, Reply at 21 (citing Ex. 1082, ¶39); -1040 Sur-Reply at 20-21

Dr. Banerjee: Chemox Growth Has Long Been A Mature Science

Q Does Kwark list any parameters related to this RCA clean step?

A Kwark doesn't, but RCA cleans are very well known in the art. And there is a range of temperatures and times and chemical recipes that are used that I teach my undergrad students in my class.

Ex. 2023 (Banerjee Depo.) at 58:3-9

-1039, Reply at 16-17
-1040, Reply at 15

Dr. Banerjee: Chemox Are Thin Oxides

Q Right. And you would use different temperatures and times to get different thicknesses. Correct?

A That's correct. However, as I told you, the variation of those thicknesses is not going to be large. It will be sort of in the range of 10 to 20 angstrom range. You will not be growing a thousand-angstrom oxide with this technique.

Ex. 2023 (Banerjee Depo.) at 58:16-59:1

-1039, Reply at 16
-1040, Reply at 15

Maxeon Improperly Extrapolated J_{oe} Values

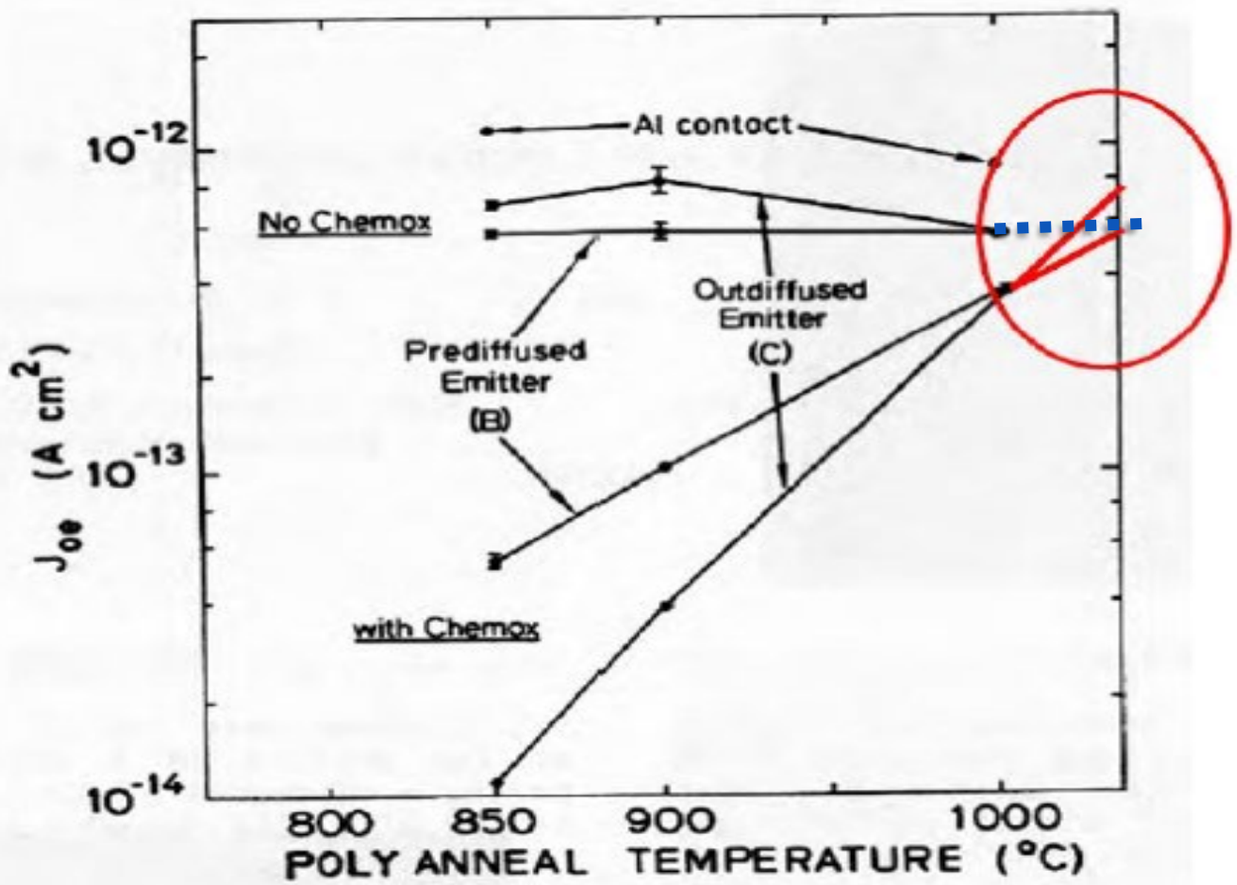

Fig. 4: emitter saturation current for POLY contacts with and without a chemically grown interfacial layer vs. anneal temperature. Thicknesses range from 3000-3600 angstroms. Note the large difference when the interfacial oxide is missing.

Ex. 1008, Fig. 4 (annotated)

-1039, Ex. 2020 (Ruby Decl.) at 83; -1040, Ex. 2020 at 73 (blue annotation added)

-1039, Reply at 17-19
-1040, Reply at 17-18

Maxeon Improperly Extrapolated J_{oe} Values

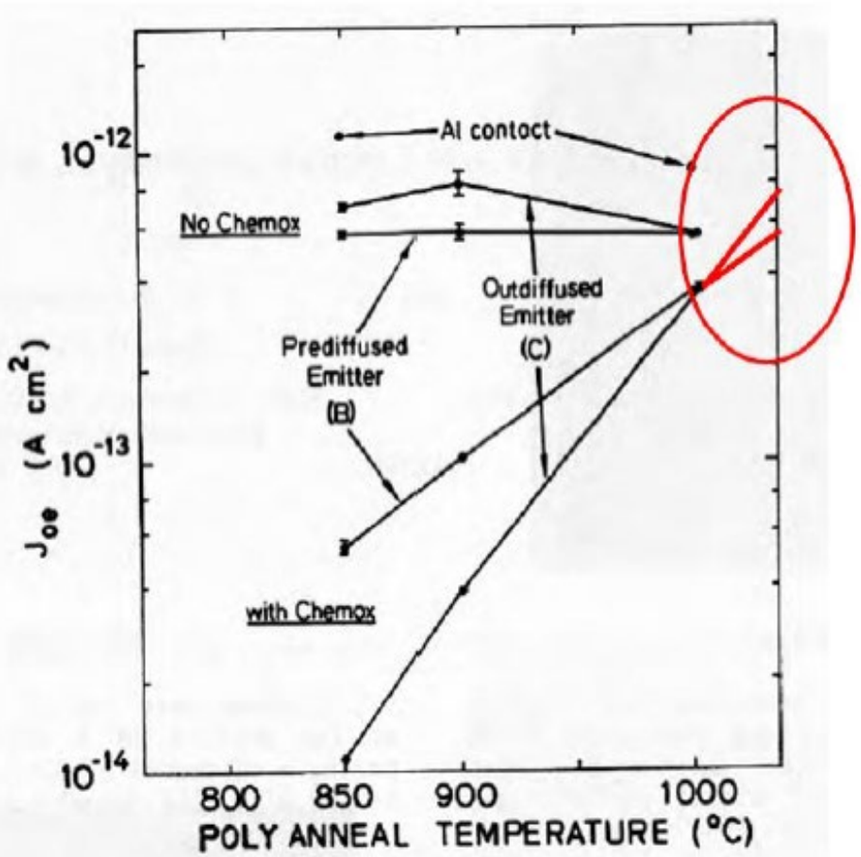

Fig. 4: emitter saturation current for POLY contacts with and without a chemically grown interfacial layer vs. anneal temperature. Thicknesses range from 3000-3600 angstroms. Note the large difference when the interfacial oxide is missing.

Ex. 1008, Fig. 4 (annotated)

-1039, Ex. 2020 (Ruby Decl.) at 83
-1040, Ex. 2020 at 73

You can't say for certain that the J0,e would continue to increase linearly as you've depicted; right?

A Not precisely linearly.

-1039 Ex. 1066, -1040 Ex. 1081 (Ruby Depo.) at 90:7-9

Did you generate the annotations on Fig. 4 at the top of page 83?

A No, I did not.

-1039 Ex. 1066, -1040 Ex. 1081 (Ruby Depo.) at 89:1-3

incorrect for at least two reasons. First, Dr. Ruby does not explain how, based on his unsupported extrapolation, the chemox/polysilicon J_o measurements would increase to levels beyond the pure polysilicon (without chemox) measured value of J_o. If at higher temperatures the interfacial oxide layer is degraded, then at best there will be an asymptote where the J_o flattens out at the J_o level of the polysilicon without a chemox layer.

-1039 Ex. 1067, -1040 Ex. 1082 (Banerjee Reply Decl.), ¶32

-1039, Reply at 18-19; -1040, Reply at 18-19

Froitzheim and Borden Could Have Been Readily Combined

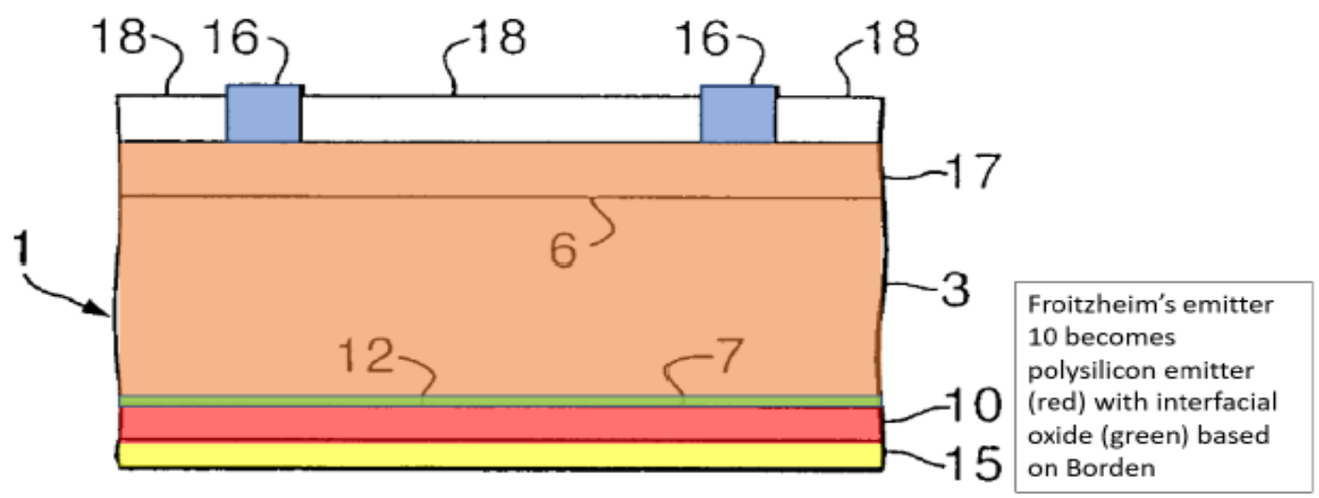

Froitzheim's emitter 10 becomes polysilicon emitter (red) with interfacial oxide (green) based on Borden

Ex. 1003 (Banerjee Decl.) at 93

(57) Abstract: The present invention relates to improved HIT type or polysilicon emitter solar cells. According to certain aspects, the invention includes forming a masking oxide layer on the front and back of the cell and then patterning holes in the masking oxide. A HIT cell structure or polysilicon emitter solar cell structure is then formed over the patterned oxide, creating the cell junction only in the areas where holes have been cut. Benefits of the invention include that it provides a controlled interface for the HIT cell through insertion of a thin tunnel oxide. Moreover, the tunnel oxide prevents epitaxial growth of amorphous silicon, allowing it to remain amorphous for the optimum band structure. Still further, it provides a layer to protect the surface from plasma damage during deposition of the a-Si layer. Further, it may be used in conjunction with a point contact structure to further increase efficiency.

Ex. 1009 (Borden) at Abstract

-1039, Pet. at 65-67; Reply at 23-24

A POSITA Would Be Motivated to Combine Froitzheim and Borden

The Skilled Artisan would have been motivated to replace Froitzheim's emitter with a polysilicon emitter with an oxide layer because polysilicon emitter increases solar cell efficiency as previously taught by Gan and Kwark and Borden further taught that the oxide layer "prevents epitaxial growth," allowing for "optimum band structure" and "provides a layer to protect the surface from plasma damage." EX1009, Abstract, ¶8; EX1003, ¶199. The teachings of Gan, Foglietti, Kwark, and Borden discussed in §§X.B.1, XI.B, and XII.A would similarly have motivated the Skilled Artisan to integrate a polysilicon emitter with interfacial oxide layer. EX1003, ¶199.

-1039, Pet. at 66

Borden's Benefits Apply to Polysilicon Emitters

[0016] In general, the present inventors recognize that thin tunnel oxide layers can be used in solar cells. For example, some MIS cells can be made using aluminum over tunnel oxides. The present inventors further recognize that tunnel oxides can be used between a heavily doped or insulating layer of polysilicon and a crystal silicon substrate, forming a polysilicon emitter solar cell. Such a solar cell has a similar band structure to a HIT cell, essentially replacing the TCO and a-Si layers with polysilicon. However, such cells do not provide the heterojunction and its benefit of a higher cell voltage due to the higher bandgap of a-Si.

Ex. 1009 (Borden), ¶16

-1039, Pet. at 65-66; Reply at 23

Borden's Benefits Apply to Polysilicon Emitters

A I think the key teaching in Borden is that use of interfacial oxide. If you had put amorphous silicon on top, it would prevent epitaxial regrowth of amorphous silicon. If you didn't have amorphous silicon, instead have polysilicon, you would help minimize the epitaxial growth of the polysilicon. And the presence of the interfacial oxide would help minimize any plasma damage, if you're doing plasma-enhanced deposition.

Ex. 2023 (Banerjee Depo.) at 151:21-152:15

-1039, Reply at 24

Froitzheim + Gan or Kwark or Borden Meets Claim 12 of the ’516 Patent

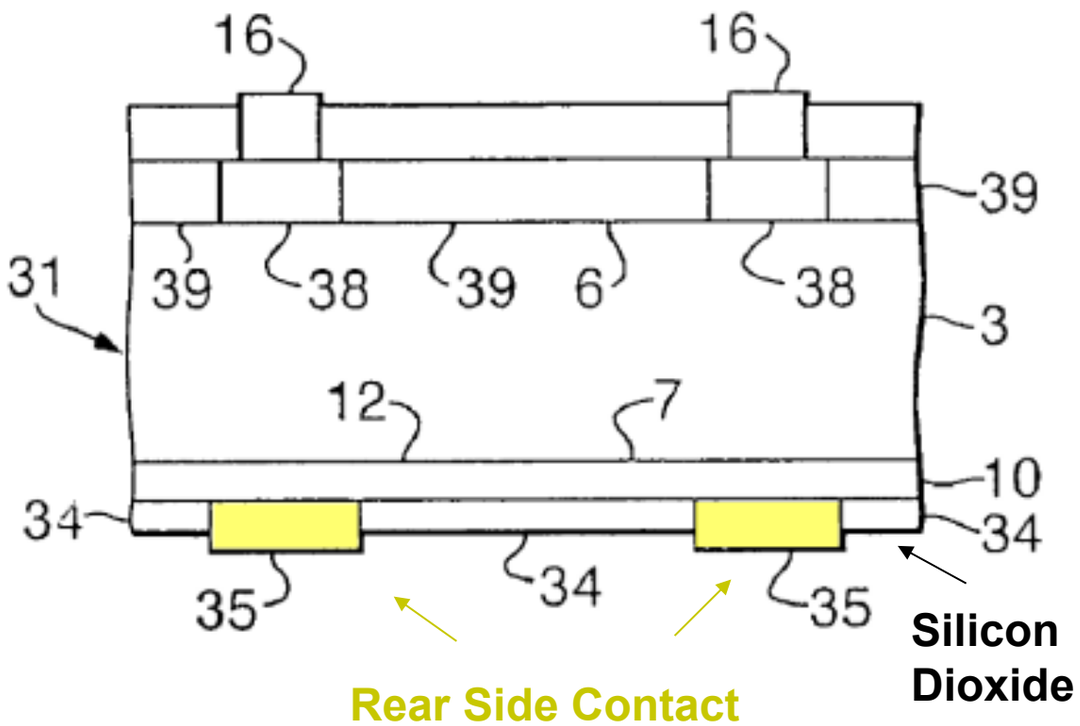

Ex. 1006 (Froitzheim) at Fig. 3

9. A solar cell having a front side facing the sun to collect solar radiation during normal operation and a backside opposite the front side, the solar cell comprising:

a substrate having a textured front surface;

an emitter layer formed over a back surface of the substrate, the emitter layer forming a backside junction with the substrate;

an oxide layer formed between the back surface of the substrate and the emitter layer;

a first metal contact making an electrical connection to the substrate on the front side of the solar cell; and

a second metal contact making an electrical connection to the emitter layer on the backside of the solar cell, the first metal contact and the second metal contact being configured to allow an external electrical circuit to be powered by the solar cell.

10. The solar cell of claim **9** further comprising an antireflective layer over the textured front surface of the substrate.

11. The solar cell of claim **9** wherein the substrate comprises an N-type silicon substrate and the emitter layer comprises a P-type doped polysilicon.

12. The solar cell of claim **9** wherein the second metal contact comprises silver formed over a layer of silicon dioxide.

Ex. 1001 (’516 Patent) at 6:42-65

-1039, Pet. at 55-57; Reply at 14-15

Froitzheim + Gan or Kwark or Borden Meets Claim 12 of the ’516 Patent

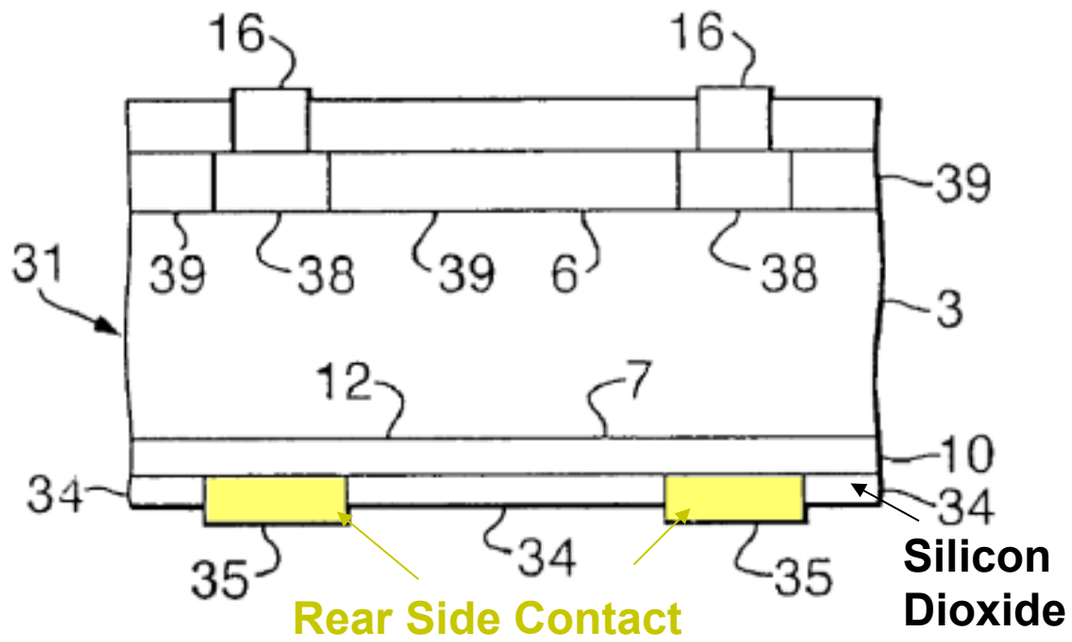

Ex. 1006 (Froitzheim) at Fig. 3

[0033] Reference is made to Figure 3 showing a second embodiment of a solar cell 31 according to the invention. Cell 31 differs from cell 1 of Figure 1 in that the rear contacts 35 are arranged in a finger structure covering only part of the rear side, e.g. similar to that of Figure 2. A typical coverage is in the range of 10-40% of the rear surface. Between the fingers a passivation layer 34 is arranged, for which the same type of layers can be used as for the front side. If the cell is suitably arranged for operation such that reflected or diffracted light is received at the rear side not facing the sun, additional photocurrent can be created by photons absorbed predominantly in the body layer 3 from the rear side.

Ex. 1006 (Froitzheim) at 33:4–9

[0050] Passivation and antireflection coating can be applied using known methods, before or after contact formation.

Ex. 1006 (Froitzheim) at 50:7

-1039, Pet. at 55-57; Reply at 14-15

CERTIFICATE OF SERVICE

I hereby certify that on this 9th day of October, 2025, a copy of **Petitioner's Demonstrative** has been served in its entirety by electronic mail on the following counsel of record for patent owner:

Jeremy D. Peterson	jeremy.peterson@pvuslaw.com
Bradford A. Cangro	bradford.cangro@pvuslaw.com
Jacob A. Snodgrass	jacob.snodgrass@pvuslaw.com
Jing Zhao	jing.zhao@pvuslaw.com
	Maxeon_SolarIPRService@pvuslaw.com

Dated: October 9, 2025

Respectfully submitted,

/Samuel N. Tiu/

Samuel N. Tiu
Reg. No. 47,997
Sidley Austin LLP
350 S. Grand Avenue
Los Angeles, CA 90071