3GPP TS 23.203 V8.4.0 (2008-12)

Technical Specification

3rd Generation Partnership Project;
Technical Specification Group Services and System Aspects;
Policy and charging control architecture
(Release 8)

The present document has been developed within the 3rd Generation Partnership Project (3GPP TM) and may be further elaborated for the purposes of 3GPP.

The present document has not been subject to any approval process by the 3GPP Organizational Partners and shall not be implemented.
This Specification is provided for future development work within 3GPP only. The Organizational Partners accept no liability for any use of this Specification.
Specifications and reports for implementation of the 3GPP TM system should be obtained via the 3GPP Organizational Partners' Publications Offices.

Keywords

LTE, UMTS, GSM, Charging, Performance

3GPP

Postal address

3GPP support office address

650 Route des Lucioles - Sophia Antipolis
Valbonne - FRANCE
Tel.: +33 4 92 94 42 00 Fax: +33 4 93 65 47 16

Internet

http://www.3gpp.org

Copyright Notification

No part may be reproduced except as authorized by written permission.
The copyright and the foregoing restriction extend to reproduction in all media.

© 2008, 3GPP Organizational Partners (ARIB, ATIS, CCSA, ETSI, TTA, TTC).
All rights reserved.

UMTS™ is a Trade Mark of ETSI registered for the benefit of its members
3GPP™ is a Trade Mark of ETSI registered for the benefit of its Members and of the 3GPP Organizational Partners
LTE™ is a Trade Mark of ETSI currently being registered for the benefit of its Members and of the 3GPP Organizational Partners
GSM® and the GSM logo are registered and owned by the GSM Association

IPR2024-01041 / IPR2024-01042
Petitioners' Exhibit 1010
Page 000002

Contents

Foreword....8
Introduction....8
1 Scope....9
2 References....9
3 Definitions, symbols and abbreviations....10
3.1 Definitions....10
3.3 Abbreviations....11
4 High level requirements....12
4.1 General requirements....12
4.2 Charging related requirements....12
4.2.1 General....12
4.2.2 Charging models....13
4.2.2a Charging requirements....13
4.2.3 Examples of Service Data Flow Charging....14
4.3 Policy control requirements....14
4.3.1 General....14
4.3.2 Gating control....15
4.3.3 QoS control....15
4.3.3.1 QoS control at service data flow level....15
4.3.3.2 QoS control at IP-CAN bearer level....15
4.3.3.3 QoS Conflict Handling....15
5 Architecture model and reference points....16
5.1 Reference architecture....16
5.2 Reference points....18
5.2.1 Rx reference point....18
5.2.2 Gx reference point....18
5.2.3 Sp reference point....19
5.2.4 Gy reference point....19
5.2.5 Gz reference point....19
5.2.6 S9 reference point....19
5.2.7 Gxx reference point....20
6 Functional description....20
6.1 Overall description....20
6.1.0 General....20
6.1.1 Binding mechanism....20
6.1.1.1 General....20
6.1.1.2 Session binding....21
6.1.1.3 PCC rule authorization and QoS rule generation....21
6.1.1.4 Bearer Binding....22
6.1.2 Reporting....23
6.1.3 Credit management....23
6.1.4 Event Triggers....24
6.1.5 Policy Control....26
6.1.6 Service (data flow) Prioritization and Conflict Handling....27
6.1.7 Standardized QoS characteristics....27
6.1.7.1 General....27
6.1.7.2 Standardized QCI characteristics....27
6.1.7.3 Allocation and Retention Priority characteristics....30
6.1.8 Termination Action....30
6.2 Functional entities....31
6.2.1 Policy Control and Charging Rules Function (PCRF)....31
6.2.1.0 General....31
6.2.1.1 Input for PCC decisions....33

IPR2024-01041 / IPR2024-01042
Petitioners' Exhibit 1010
Page 000003

6.2.1.2 Subscription information management in the PCRF ... 34
6.2.1.3 V-PCRF ... 34
6.2.1.3.1 General ... 34
6.2.1.3.2 V-PCRF and Home Routed Access ... 35
6.2.1.3.3 V-PCRF and Visited Access (local breakout) ... 35
6.2.1.4 H-PCRF ... 36
6.2.1.4.1 General ... 36
6.2.1.4.2 H-PCRF and Home Routed Access ... 36
6.2.1.4.3 H-PCRF and Visited Access (Local Breakout) ... 37
6.2.1.5 Handling of Multiple BBERFs associated with the same IP-CAN session ... 37
6.2.2 Policy and Charging Enforcement Function (PCEF) ... 38
6.2.2.1 General ... 38
6.2.2.2 Service data flow detection ... 40
6.2.2.3 Measurement ... 42
6.2.2.4 QoS control ... 43
6.2.3 Application Function (AF) ... 43
6.2.4 Subscription Profile Repository (SPR) ... 44
6.2.5 Service Data Flow Based Credit Control Function ... 44
6.2.6 Offline Charging System (OFCS) ... 44
6.2.7 Bearer Binding and Event Reporting Function (BBERF) ... 44
6.2.7.1 General ... 44
6.2.7.2 Service data flow detection ... 45
6.2.7.3 QoS Control ... 45
6.3 Policy and charging control rule ... 45
6.3.1 General ... 45
6.3.2 Policy and charging control rule operations ... 50
6.4 IP-CAN bearer and IP-CAN session related policy information ... 51
6.5 Quality of Service Control rule ... 52
6.5.1 General ... 52
6.5.2 Quality of Service control rule operations ... 52

7 PCC Procedures and flows ... 53
7.1 Introduction ... 53
7.2 IP-CAN Session Establishment ... 55
7.3 IP-CAN Session Termination ... 57
7.3.1 UE initiated IP-CAN Session termination ... 57
7.3.2 GW(PCEF) initiated IP-CAN Session termination ... 59
7.4 IP-CAN Session Modification ... 60
7.4.1 IP-CAN Session Modification; GW(PCEF) initiated ... 60
7.4.2 IP-CAN Session Modification; PCRF initiated ... 63
7.4.3 Void ... 65
7.5 Update of the subscription information in the PCRF ... 65
7.6 PCRF Discovery and Selection ... 65
7.6.1 General principles ... 65
7.6.2 Solution Principles ... 66
7.7 Gateway Control Session Procedures ... 68
7.7.1 Gateway Control Session Establishment ... 68
7.7.1.0 General ... 68
7.7.1.1 Gateway Control Session Establishment during Attach ... 68
7.7.1.2 Gateway Control Session Establishment during BBERF Relocation ... 69
7.7.2 Gateway Control Session Termination ... 71
7.7.2.1 GW(BBERF)-Initiated Gateway Control Session Termination ... 71
7.7.2.2 PCRF-Initiated Gateway Control Session Termination ... 72
7.7.3 Gateway Control and QoS Rules Request ... 72
7.7.3.1 General ... 72
7.7.3.2 Event reporting for PCEF in visited network and locally terminated Gxx interaction ... 74
7.7.4 Gateway Control and QoS Rules Provision ... 75
7.7.5 Void ... 76

Annex A (normative): Access specific aspects (3GPP) ... 77

A.1 GPRS ... 77
A.1.0 General ... 77

IPR2024-01041 / IPR2024-01042
Petitioners' Exhibit 1010
Page 000004

A.1.1 High level requirements ... 77
A.1.1.1 General ... 77
A.1.1.2 Charging related requirements ... 77
A.1.1.3 Policy control requirements ... 77
A.1.2 Architecture model and reference points ... 78
A.1.2.1 Reference points ... 78
A.1.2.1.1 Gx reference point ... 78
A.1.2.2 Reference architecture ... 78
A.1.3 Functional description ... 78
A.1.3.1 Overall description ... 78
A.1.3.1.1 Binding mechanism ... 78
A.1.3.1.1.0 General ... 78
A.1.3.1.1.1 Bearer binding mechanism allocated to the PCEF ... 79
A.1.3.1.1.2 Bearer binding mechanism allocated to the PCRF ... 79
A.1.3.1.2 Reporting ... 79
A.1.3.1.3 Credit management ... 79
A.1.3.1.4 Event Triggers ... 80
A.1.3.2 Functional entities ... 80
A.1.3.2.1 Policy Control and Charging Rules Function (PCRF) ... 80
A.1.3.2.1.1 Input for PCC decisions ... 80
A.1.3.2.2 Policy and Charging Enforcement Function (PCEF) ... 81
A.1.3.2.2.1 General ... 81
A.1.3.2.2.2 Service data flow detection ... 82
A.1.3.2.2.3 Packet Routeing and Transfer Function ... 82
A.1.3.2.2.4 Measurement ... 82
A.1.3.2.3 Application Function (AF) ... 82
A.1.3.3 Policy and charging control rule ... 82
A.1.3.3.1 General ... 82
A.1.3.3.2 Policy and charging control rule operations ... 82
A.1.3.4 IP-CAN bearer and IP-CAN session related policy information ... 82
A.1.4 PCC Procedures and flows ... 83
A.1.4.1 Introduction ... 83
A.1.4.2 IP-CAN Session Establishment ... 83
A.1.4.3 IP-CAN Session Termination ... 83
A.1.4.3.1 UE initiated IP-CAN Session termination ... 83
A.1.4.3.2 GW initiated IP-CAN Session termination ... 83
A.1.4.4 IP-CAN Session Modification ... 83
A.1.4.4.1 IP-CAN Session Modification; GW(PCEF) initiated ... 83
A.1.4.4.2 IP-CAN Session Modification; PCRF initiated ... 84

A.2 Void ... 84

A.3 Void ... 84

A.4 3GPP Accesses (GERAN/UTRAN/E-UTRAN) - GTP-based EPC ... 84
A.4.0 General ... 84
A.4.1 High Level Requirements ... 84
A.4.1.1 Charging related requirements ... 84
A.4.1.2 QoS control ... 85
A.4.2 Architectural Model and Reference Points ... 85
A.4.2.1 Reference architecture ... 85
A.4.3 Functional Description ... 85
A.4.3.1 Overall description ... 85
A.4.3.1.1 Credit management ... 85
A.4.3.1.2 Event Triggers ... 85
A.4.3.1.3 Binding mechanism ... 86
A.4.3.1.4 Policy Control ... 87
A.4.3.2 Functional Entities ... 87
A.4.3.2.1 Policy Control and Charging Rules Function (PCRF) ... 87
A.4.3.2.2 Policy and Charging Enforcement Function (PCEF) ... 87
A.4.3.3 APN related policy information ... 87
A.4.4 PCC Procedures and Flows ... 88
A.4.4.1 Introduction ... 88

IPR2024-01041 / IPR2024-01042
Petitioners' Exhibit 1010
Page 000005

A.4.4.2 IP-CAN Session Establishment ... 88
A.4.4.3 GW(PCEF) initiated IP-CAN Session termination ... 88
A.4.4.4 IP-CAN Session Modification ... 88
A.4.4.4.1 IP-CAN Session Modification; GW(PCEF) initiated ... 88
A.4.4.4.2 IP-CAN Session Modification; PCRF initiated ... 88

A.5 3GPP Accesses (GERAN/UTRAN/E-UTRAN) - PMIP-based EPC ... 89
A.5.0 General ... 89
A.5.1 High Level Requirements ... 89
A.5.1.0 General ... 89
A.5.1.1 QoS control ... 89
A.5.2 Architectural Model and Reference Points ... 89
A.5.2.1 Reference architecture ... 89
A.5.3 Functional Description ... 89
A.5.3.1 Overall Description ... 89
A.5.3.1.1 Binding mechanism ... 89
A.5.3.1.2 Credit management ... 89
A.5.3.1.3 Event triggers ... 89
A.5.3.2 Functional Entities ... 90
A.5.3.2.1 Policy Control and Charging Rules Function (PCRF) ... 90
A.5.3.2.2 Policy and Charging Enforcement Function (PCEF) ... 90
A.5.3.2.3 Bearer Binding and Event Reporting Function (BBERF) ... 90
A.5.3.3 Void ... 90
A.5.3.4 APN related policy information ... 90
A.5.4 PCC Procedures and Flows ... 90
A.5.4.1 Introduction ... 90
A.5.4.2 Gateway Control Session Establishment ... 90
A.5.4.3 Gateway Control and QoS Rules Request ... 91
A.5.4.4 Gateway Control and QoS Rules Provisioning ... 91
A.5.4.5 IP-CAN Session Establishment ... 91
A.5.4.6 IP-CAN Session Modification ... 91
A.5.4.6.1 IP-CAN Session Modification; GW(PCEF) initiated ... 91
A.5.4.6.2 IP-CAN Session Modification; PCRF initiated ... 91
A.5.4.6.3 IP-CAN Session Modification; GW(BBERF) initiated ... 91

Annex B (informative): Void ... 92

Annex C (informative): Void ... 93

Annex D (informative): Access specific aspects (Non-3GPP) ... 94

D.1 DOCSIS IP-CAN ... 94
D.1.1 General ... 94
D.1.1 High level requirements ... 94
D.1.1.1 General ... 94
D.1.1.2 Charging related requirements ... 95
D.1.1.3 Policy control requirements ... 95
D.1.2 Architecture model and reference points ... 96
D.1.2.1 Reference points ... 96
D.1.2.1.1 Rx reference point ... 96
D.1.2.1.2 Gx reference point ... 96
D.1.2.1.3 Sp reference point ... 96
D.1.3 Functional description ... 96
D.1.3.1 Overall description ... 96
D.1.3.1.1 Binding mechanism ... 96
D.1.3.2 Functional entities ... 97
D.1.3.2.1 Policy Control and Charging Rules Function (PCRF) ... 97
D.1.3.2.1.1 Input for PCC decisions ... 97
D.1.3.2.2 Policy and Charging Enforcement Function (PCEF) ... 97
D.1.3.2.3 Application Function (AF) ... 97
D.1.3.3 Policy and charging control rule ... 97
D.1.3.3.1 General ... 97
D.1.3.3.2 Policy and charging control rule operations ... 97

IPR2024-01041 / IPR2024-01042
Petitioners' Exhibit 1010
Page 000006

D.2 WiMAX IP-CAN 98
D.2.1 High level requirements 98
D.2.1.1 General 98
D.2.1.2 Charging related requirements 98
D.2.1.3 Policy control requirements 98
D.2.2 Architecture model and reference points 99
D.2.2.1 Reference points 99
D.2.2.1.1 Rx reference point 99
D.2.2.1.2 Gx reference point 99
D.2.2.1.3 Sp reference point 99
D.2.3 Functional description 99
D.2.3.1 Overall description 99
D.2.3.1.1 Binding mechanism 99
D.2.3.1.2 Credit management 99
D.2.3.1.3 Event triggers 99
D.2.3.2 Functional entities 99
D.2.3.2.1 Policy Control and Charging Rules Function (PCRF) 99
D.2.3.2.2 Policy and Charging Enforcement Function (PCEF) 100
D.2.3.2.3 Application Function (AF) 100
D.2.3.3 Policy and charging control rule 100
D.2.3.3.1 General 100
D.2.3.3.1 Policy and charging control rule operations 100

Annex E (informative): Reference Scenario for the evolution of QoS control 101

Annex F (informative): Co-existence between SBLP based (Release 6) and PCC based (Release 7 and later) policy control 102

F.1 General 102

F.2 GPRS network scenario where the UE supports a previous Release 102

Annex G (informative): PCC rule precedence configuration 104

Annex H (normative): Access specific aspects (EPC-based Non-3GPP) 105

H.1 General 105

H.2 EPC-based cdma2000 HRPD Access 105

Annex I (informative): Void 106

Annex J (informative): Standardized QCI characteristics - rationale and principles 107

Annex K (informative): Limited PCC Deployment 108

Annex L (normative): Limited PCC Deployment 108

Annex M (informative): Handling of UE or network responsibility for the resource management of services 109

Annex N (informative): Change history 110

IPR2024-01041 / IPR2024-01042
Petitioners' Exhibit 1010
Page 000007

Foreword

This Technical Specification has been produced by the 3rd Generation Partnership Project (3GPP).

The contents of the present document are subject to continuing work within the TSG and may change following formal TSG approval. Should the TSG modify the contents of the present document, it will be re-released by the TSG with an identifying change of release date and an increase in version number as follows:

Version x.y.z

where:

x the first digit:

1 presented to TSG for information;

2 presented to TSG for approval;

3 or greater indicates TSG approved document under change control.

y the second digit is incremented for all changes of substance, i.e. technical enhancements, corrections, updates, etc.

z the third digit is incremented when editorial only changes have been incorporated in the document.

Introduction

Editor's Note: The content of this specification has been copied from TS 23.203 v.7.4.0 and thus is not fully updated according to current Rel-8 TS 23.401 and TS 23.402 versions. Thus, it is expected further contributions in order to make this specification compliant with Rel-8 requirements.

Policy and Charging Control functionality encompasses two main functions:

- Flow Based Charging, including charging control and online credit control;
- Policy control (e.g. gating control, QoS control, QoS signalling, etc.).

The present document specifies the generic PCC aspects within the body, while the specifics for each type of IP-CAN are specified in Annexes. For one type of IP-CAN the corresponding clause in an Annex shall be understood to be a realization of the TS main body. The Annexes are therefore not stand-alone specifications for an IP-CAN. Annexes may specify additional restrictions to the specification body.

IPR2024-01041 / IPR2024-01042
Petitioners' Exhibit 1010
Page 000008

1 Scope

The present document specifies the overall stage 2 level functionality for Policy and Charging Control that encompasses the following high level functions for IP-CANs (e.g. GPRS, I-WLAN, Fixed Broadband, etc.):

- Flow Based Charging, including charging control and online credit control;
- Policy control (e.g. gating control, QoS control, QoS signalling, etc.).

The present document specifies the Policy and Charging Control functionality for Evolved 3GPP Packet Switched domain, including both 3GPP accesses (GERAN/UTRAN/E-UTRAN) and Non-3GPP accesses, according to TS 23.401 [17] and TS 23.402 [18].

The present document specifies functionality for unicast bearers. Broadcast and multicast bearers, such as MBMS contexts for GPRS, are out of scope for the present release of this document.

2 References

The following documents contain provisions which, through reference in this text, constitute provisions of the present document.

- References are either specific (identified by date of publication, edition number, version number, etc.) or non-specific.
- For a specific reference, subsequent revisions do not apply.
- For a non-specific reference, the latest version applies. In the case of a reference to a 3GPP document (including a GSM document), a non-specific reference implicitly refers to the latest version of that document *in the same Release as the present document*.

[1] 3GPP TS 41.101: "Technical Specifications and Technical Reports for a GERAN-based 3GPP system".

[2] Void.

[3] 3GPP TS 32.240: "Telecommunication management; Charging management; Charging architecture and principles".

[4] IETF RFC 4006: "Diameter Credit-Control Application".

[5] 3GPP TS 23.207: "End-to-end Quality of Service (QoS) concept and architecture".

[6] 3GPP TS 23.246: "Multimedia Broadcast/Multicast Service (MBMS); Architecture and functional description".

[7] 3GPP TS 23.125: "Overall high level functionality and architecture impacts of flow based charging; Stage 2".

[8] 3GPP TR 21.905: "Vocabulary for 3GPP Specifications".

[9] 3GPP TS 32.251: "Telecommunication management; Charging management; Packet Switched (PS) domain charging".

[10] 3GPP TS 29.061: "Interworking between the Public Land Mobile Network (PLMN) supporting packet based services and Packet Data Networks (PDN)".

[11] 3GPP TR 33.919: "3G Security; Generic Authentication Architecture (GAA); System description".

[12] 3GPP TS 23.060: "General Packet Radio Service (GPRS); Service description; Stage 2".

[13] 3GPP TS 23.234: "3GPP system to Wireless Local Area Network (WLAN) interworking; System description".

IPR2024-01041 / IPR2024-01042
Petitioners' Exhibit 1010
Page 000009

[14] 3GPP TS 23.107: "Quality of Service (QoS) concept and architecture".

[15] "WiMAX End-to-End Network Systems Architecture" (http://www.wimaxforum.org/technology/documents).

[16] 3GPP TS 23.003: "Numbering, addressing and identification".

[17] 3GPP TS 23.401: "GPRS enhancements for E-UTRAN access".

[18] 3GPP TS 23.402: "Architecture Enhancements for non-3GPP accesses".

[19] 3GPP TS 36.300: "Evolved Universal Terrestrial Radio Access (E-UTRA) and Evolved Universal Terrestrial Radio Access (E-UTRAN); Overall description; Stage 2".

[20] 3GPP2 X.P0057-0 v0.6.0: "E UTRAN - HRPD Connectivity and Interworking: Core Network Aspects", work in progress.

3 Definitions, symbols and abbreviations

3.1 Definitions

For the purposes of the present document, the terms and definitions given in TR 21.905 [8] and the following apply. A term defined in the present document takes precedence over the definition of the same term, if any, in TR 21.905 [8].

authorised QoS: The maximum QoS that is authorised for a service data flow. In case of an aggregation of multiple service data flows within one IP-CAN bearer (e.g. for GPRS a PDP context), the combination of the "Authorised QoS" information of the individual service data flows is the "Authorised QoS" for the IP-CAN bearer. It contains the QoS class identifier and the data rate.

binding: The association between a service data flow and the IP-CAN bearer (for GPRS the PDP context) transporting that service data flow.

binding mechanism: The method for creating, modifying and deleting bindings.

charging control: The process of associating packets, belonging to a service data flow, to a charging key and applying online charging and/or offline charging, as appropriate.

charging key: information used by the online and offline charging system for rating purposes.

dynamic PCC Rule: a PCC rule for which the definition is provided into the PCEF via the Gx reference point.

event report: a notification, possibly containing additional information, of an event which occurs that corresponds with an event trigger. Also, an event report is a report from the PCRF to the AF concerning transmission resources or requesting additional information.

event trigger: a rule specifying the event reporting behaviour of a PCEF or BBERF. Also, a trigger for credit management events. The event trigger criteria are supplied to the PCEF or BBERF by the PCRF.

gating control: The process of blocking or allowing packets, belonging to a service data flow, to pass through to the desired endpoint.

GBR bearer: An IP-CAN bearer with reserved (guaranteed) bitrate resources.

GPRS IP-CAN: This IP-CAN incorporates GPRS over GERAN and UTRAN, see TS 23.060 [12].

IP-CAN bearer: An IP transmission path of defined capacity, delay and bit error rate, etc. See TS 21.905 [8] for the definition of bearer.

IP-CAN session: The association between a UE represented by an IPv4 and/or an IPv6 address, and UE identity information, if available, and a PDN represented by a PDN ID (e.g. an APN). An IP-CAN session incorporates one or more IP-CAN bearers. Support for multiple IP-CAN bearers per IP-CAN session is IP-CAN specific. An IP-CAN session exists as long as UE IP addresses are established and announced to the IP network.

IPR2024-01041 / IPR2024-01042
Petitioners' Exhibit 1010
Page 000010

I-WLAN IP-CAN: This IP-CAN incorporates 3GPP IP access of I-WLAN, see TS 23.234 [13].

non-GBR bearer: An IP-CAN bearer with no reserved (guaranteed) bitrate resources.

operator-controlled service: A service for which complete PCC rule information, including service data flow filter information, is available in the PCRF through configuration and/or dynamic interaction with an AF.

packet flow: A specific user data flow carried through the PCEF. A packet flow can be an IP flow.

PCC decision: A decision consists of PCC rules and IP-CAN bearer attributes, which is provided by the PCRF to the PCEF for policy and charging control.

PCC rule: A set of information enabling the detection of a service data flow and providing parameters for policy control and/or charging control.

policy control: The process whereby the PCRF indicates to the PCEF how to control the IP-CAN bearer. Policy control includes QoS control and/or gating control.

pre-defined PCC Rule: a PCC rule that has been provisioned directly into the PCEF by the operator.

QoS class identifier (QCI): A scalar that is used as a reference to a specific packet forwarding behaviour (e.g. packet loss rate, packet delay budget) to be provided to a SDF. This may be implemented in the access network by the QCI referencing node specific parameters that control packet forwarding treatment (e.g. scheduling weights, admission thresholds, queue management thresholds, link layer protocol configuration, etc.), that have been pre-configured by the operator at a specific node(s) (e.g. eNodeB).

QoS rule: A set of information enabling the detection of a service data flow and defining its associated QoS parameters.

service data flow: An aggregate set of packet flows that matches a service data flow template.

service data flow filter: A set of packet flow header parameter values/ranges used to identify one or more of the packet flows constituting a service data flow. The possible service data flow filters are defined in clause 6.2.2.2.

service data flow template: The set of service data flow filters in a PCC rule, required for defining a service data flow.

service identifier: An identifier for a service. The service identifier provides the most detailed identification, specified for flow based charging, of a service data flow. A concrete instance of a service may be identified if additional AF information is available (further details to be found in clause 6.3.1).

session based service: An end user service requiring application level signalling, which is separated from service rendering.

subscribed guaranteed bandwidth QoS: The per subscriber, authorized cumulative guaranteed bandwidth QoS which is provided by the SPR to the PCRF.

subscriber category: is a means to group the subscribers into different classes, e.g. gold user, the silver user and the bronze user.

uplink bearer binding verification: The network enforcement of terminal compliance with the negotiated uplink traffic mapping to bearers.

3.3 Abbreviations

For the purposes of the present document, the abbreviations given in TR 21.905 [8] and the following apply. An abbreviation defined in the present document takes precedence over the definition of the same abbreviation, if any, in TR 21.905 [8].

AF	Application Function
H-PCEF	A PCEF in the HPLMN
HRPD	High Rate Packet Data
HSGW	HRPD Serving Gateway
IP-CAN	IP Connectivity Access Network
OFCS	Offline Charging System
OCS	Online Charging System

IPR2024-01041 / IPR2024-01042
Petitioners' Exhibit 1010
Page 000011

PCC	Policy and Charging Control
PCEF	Policy and Charging Enforcement Function
PCRF	Policy and Charging Rules Function
SPR	Subscription Profile Repository
V-PCEF	A PCEF in the VPLMN

4 High level requirements

4.1 General requirements

It shall be possible for the PCC architecture to base decisions upon subscription information.

It shall be possible to apply policy and charging control to any kind of 3GPP IP-CAN and any non-3GPP accesses connected via EPC complying with TS 23.402 [18]. Applicability of PCC to other IP-CANs is not restricted. However, it shall be possible for the PCC architecture to base decisions upon the type of IP-CAN used (e.g. GPRS, I-WLAN, etc.).

The policy and charging control shall be possible in the roaming and local breakout scenarios defined in TS 23.401 [17] and TS 23.402 [18].

The PCC architecture shall discard packets that don't match any service data flow filter of the active PCC rules. It shall also be possible for the operator to define PCC rules, with wild-carded service data flow filters, to allow for the passage and charging for packets that do not match any service data flow filter of any other active PCC rules.

The PCC architecture shall allow the charging control to be applied on a per service data flow basis, independent of the policy control.

The PCC architecture shall have a binding method that allows the unique association between service data flows and their IP-CAN bearer.

A single service data flow template shall suffice, to detect a service data flow, for the purpose of both policy control and flow based charging.

A PCC rule may be predefined or dynamically provisioned at establishment and during the lifetime of an IP-CAN session. The latter is referred to as a dynamic PCC rule.

The number of real-time PCC interactions shall be minimized. This requires a single optimized interface between the PCC nodes. It shall be possible to take a PCC rule into service, and out of service, at a specific time of day, without any PCC interaction at that point in time.

PCC shall be enabled on a per PDN basis (represented by an access point and the configured range of IP addresses) at the PCEF. It shall be possible for the operator to configure the PCC architecture to perform charging control, policy control or both for a PDN access.

PCC shall support roaming users.

The PCC architecture shall allow the resolution of conflicts which would otherwise cause a subscriber's Subscribed Guaranteed Bandwidth QoS to be exceeded.

The PCC architecture shall support topology hiding.

It should be possible to use PCC architecture for handling IMS-based emergency service.

4.2 Charging related requirements

4.2.1 General

In order to allow for charging control, the information in the PCC rule identifies the service data flow and specifies the parameters for charging control. The PCC rule information may depend on subscription data.

IPR2024-01041 / IPR2024-01042
Petitioners' Exhibit 1010
Page 000012

For the purpose of charging correlation between application level (e.g. IMS) and service data flow level, applicable charging identifiers shall be passed along within the PCC architecture, if such identifiers are available.

For the purpose of charging correlation between service data flow level and application level (e.g. IMS) as well as on-line charging support at the application level, applicable charging identifiers and IP-CAN type identifiers shall be passed from the PCRF to the AF, if such identifiers are available.

4.2.2 Charging models

The PCC charging shall support the following charging models:

- Volume based charging;
- Time based charging;
- Volume and time based charging;
- Event based charging;
- No charging.

NOTE 1: The charging model - "No charging" implies that charging control is not applicable.

Shared revenue services shall be supported. In this case settlement for all parties shall be supported, including the third parties that may have been involved providing the services.

NOTE 2: When developing a charging solution, the PCC charging models may be combined to form the solution. How to achieve a specific solution is however not within the scope of this TS.

4.2.2a Charging requirements

It shall be possible to apply different rates and charging models when a user is identified to be roaming from when the user is in the home network. Furthermore, it shall be possible to apply different rates and charging models based on the location of a user, beyond the granularity of roaming.

It shall be possible to apply a separate rate to a specific service, e.g. allow the user to download a certain volume of data, reserved for the purpose of one service for free, and then continue with a rate causing a charge.

It shall be possible to change the rate based on the time of day.

It shall be possible to enforce per-service usage limits for a service data flow using online charging on a per user basis (may apply to prepaid and post-paid users).

It shall be possible for the online charging system to set and send the thresholds (time and/or volume based) for the amount of remaining credit to the PCEF for monitoring. In case the PCEF detects that any of the time based or volume based credit falls below the threshold, the PCEF shall send a request for credit re-authorization to the OCS with the remaining credit (time and/or volume based).

It shall be possible for the charging system to select the applicable rate based on:

- home/visited IP-CAN;
- IP-CAN bearer characteristics (e.g. QoS);
- QoS provided for the service;
- time of day;
- IP-CAN specific parameters according to Annex A.

The charging system maintains the tariff information, determining the rate based on the above input. Thus the rate may change e.g. as a result of IP-CAN session modification to change the bearer characteristics provided for a service data flow.

IPR2024-01041 / IPR2024-01042
Petitioners' Exhibit 1010
Page 000013

The charging rate or charging model applicable to a service data flow may change as a result of events in the service (e.g. insertion of a paid advertisement within a user requested media stream).

The charging model applicable to a service data flow may change as a result of events identified by the OCS (e.g. after having spent a certain amount of time and/or volume, the user gets to use some services for free).

The charging rate or charging model applicable to a service data flow may change as a result of having used the service data flow for a certain amount of time and/or volume.

In the case of online charging, it shall be possible to apply an online charging action upon PCEF events (e.g. re-authorization upon QoS change).

It shall be possible to indicate to the PCEF that interactions with the charging systems are not required for a PCC rule, i.e. to perform neither accounting nor credit control for this service data flow, and then no offline charging information is generated.

4.2.3 Examples of Service Data Flow Charging

There are many different services that may be used within a network, including both user-user and user-network services. Service data flows from these services may be identified and charged in many different ways. A number of examples of configuring PCC rules for different service data flows are described below.

EXAMPLE 1: A network server provides an FTP service. The FTP server supports both the active (separate ports for control and data) and passive modes of operation. A PCC rule is configured for the service data flows associated with the FTP server for the user. The PCC rule uses a filter specification for the uplink that identifies packets sent to port 20 or 21 of the IP address of the server, and the origination information is wildcarded. In the downlink direction, the filter specification identifies packets sent from port 20 or 21 of the IP address of the server.

EXAMPLE 2: A network server provides a "web" service. A PCC rule is configured for the service data flows associated with the HTTP server for the user. The PCC rule uses a filter specification for the uplink that identifies packets sent to port 80 of the IP address of the server, and the origination information is wildcarded. In the downlink direction, the filter specification identifies packets sent from port 80 of the IP address of the server.

EXAMPLE 3: The same server provides a WAP service. The server has multiple IP addresses, and the IP address of the WAP server is different from the IP address of the web server. The PCC rule uses the same filter specification as for the web server, but with the IP addresses for the WAP server only.

EXAMPLE 4: An operator offers a zero rating for network provided DNS service. A PCC rule is established setting all DNS traffic to/from the operators DNS servers as offline charged. The data flow filter identifies the DNS port number, and the source/destination address within the subnet range allocated to the operators network nodes.

EXAMPLE 5: An operator has a specific charging rate for user-user VoIP traffic over the IMS. A PCC rule is established for this service data flow. The filter information to identify the specific service data flow for the user-user traffic is provided by the P-CSCF (AF).

EXAMPLE 6: An operator is implementing UICC based authentication mechanisms for HTTP based services utilizing the GAA Framework as defined in TR 33.919 [11] by e.g. using the Authentication Proxy. The Authentication Proxy may appear as an AF and provide information to the PCRF for the purpose of selecting an appropriate PCC Rule.

4.3 Policy control requirements

4.3.1 General

The policy control features comprise gating control and QoS control.

The concept of QoS class identifier and the associated bitrates specify the QoS information for service data flows and bearers on the Gx and Gxx reference points.

IPR2024-01041 / IPR2024-01042
Petitioners' Exhibit 1010
Page 000014

4.3.2 Gating control

Gating control shall be applied on a per service data flow basis.

To enable the PCRF gating control decisions, the AF shall report session events (e.g. session termination, modification) to the PCRF. For example, session termination, in gating control, may trigger the blocking of packets or "closing the gate".

4.3.3 QoS control

4.3.3.1 QoS control at service data flow level

It shall be possible to apply QoS control on a per service data flow basis.

QoS control per service data flow allows the PCC architecture to provide the PCEF with the authorized QoS to be enforced for each specific service data flow. Criteria such as the QoS subscription information may be used together with policy rules such as, service-based, subscription-based, or pre-defined PCRF internal policies to derive the authorized QoS to be enforced for a service data flow.

It shall be possible to apply multiple PCC rules, without application provided information, using different authorised QoS within a single IP-CAN session and within the limits of the Subscribed QoS profile.

4.3.3.2 QoS control at IP-CAN bearer level

It shall be possible for the PCC architecture to support control of QoS reservation procedures (UE-initiated or network-initiated) for IP-CANs that support such procedures for its IP-CAN bearers. It shall be possible to determine the QoS to be applied in QoS reservation procedures (QoS control) based on the authorised QoS of the service data flows that are applicable to the IP-CAN bearer and on criteria such as the QoS subscription information, service based policies, and/or pre-defined PCRF internal policies. Details of QoS reservation procedures are IP-CAN specific and therefore, the control of these procedures is described in Annex A and Annex D.

It shall be possible for the PCC architecture to support control of QoS for the packet traffic of IP-CANs.

The PCC architecture shall be able to provide policy control in the presence of NAT devices. This may be accomplished by providing appropriate address and port information to the PCRF.

The enforcement of the control for QoS reservation procedures for an IP-CAN bearer shall allow for a downgrading or an upgrading of the requested QoS as part of a UE-initiated IP-CAN bearer establishment and modification. The PCC architecture shall be able to provide a mechanism to initiate IP-CAN bearer establishment and modification (for IP-CANs that support such procedures for its bearers) as part of the QoS control.

The IP-CAN shall prevent cyclic QoS upgrade attempts due to failed QoS upgrades.

NOTE: These measures are IP-CAN specific.

The PCC architecture shall be able to handle IP-CAN bearers that require a guaranteed bitrate (GBR bearers) and IP-CAN bearers for which there is no guaranteed bitrate (non-GBR bearers).

4.3.3.3 QoS Conflict Handling

It shall be possible for the PCC architecture to support conflict resolution when the authorized bandwidth associated with multiple PCC rules exceeds the Subscribed Guaranteed bandwidth QoS.

IPR2024-01041 / IPR2024-01042
Petitioners' Exhibit 1010
Page 000015

5 Architecture model and reference points

5.1 Reference architecture

The PCC functionality is comprised by the functions of the Policy and Charging Enforcement Function, the Bearer Binding and Event Reporting Function (BBERF), the Policy and Charging Rules Function, the Application Function, the Online Charging System, the Offline Charging System and the Subscription Profile Repository.

The PCC architecture extends the architecture of an IP-CAN, where the Policy and Charging Enforcement Function is a functional entity in the Gateway node implementing the IP access to the PDN. The allocation of the Bearer Binding and Event Reporting Function is specific to each IP-CAN type and specified in the corresponding Annex.

The non-3GPP network relation to the PLMN is the same as defined in TS 23.402 [18].

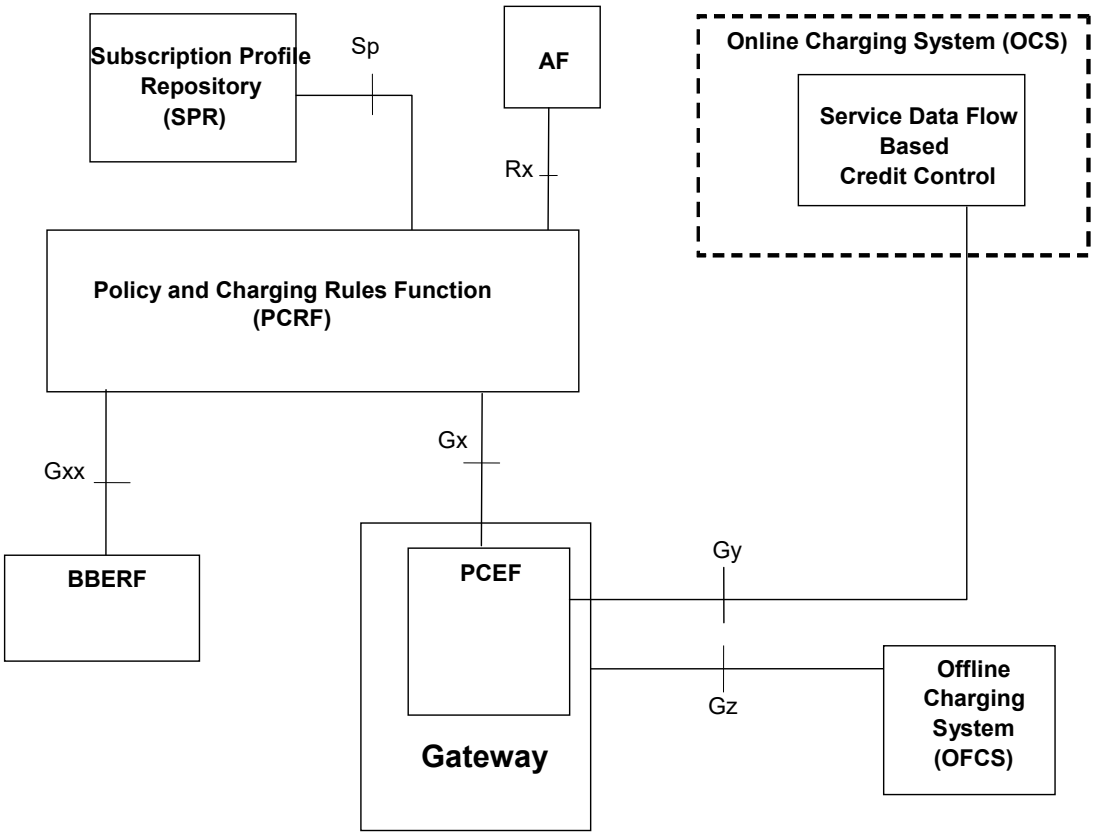

Figure 5.1.1: Overall PCC logical architecture (non-roaming)

IPR2024-01041 / IPR2024-01042
Petitioners' Exhibit 1010
Page 000016

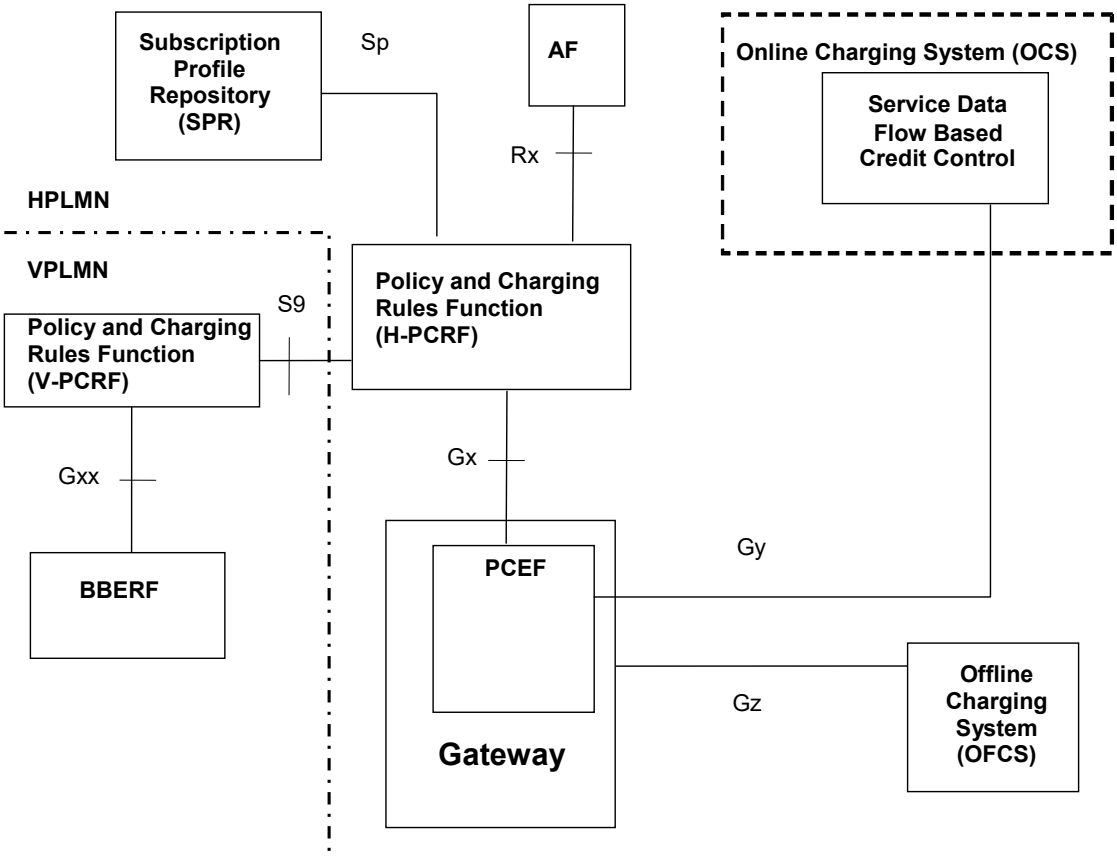

Figure 5.1.2: Overall PCC architecture (roaming with home routed access)

IPR2024-01041 / IPR2024-01042
Petitioners' Exhibit 1010
Page 000017

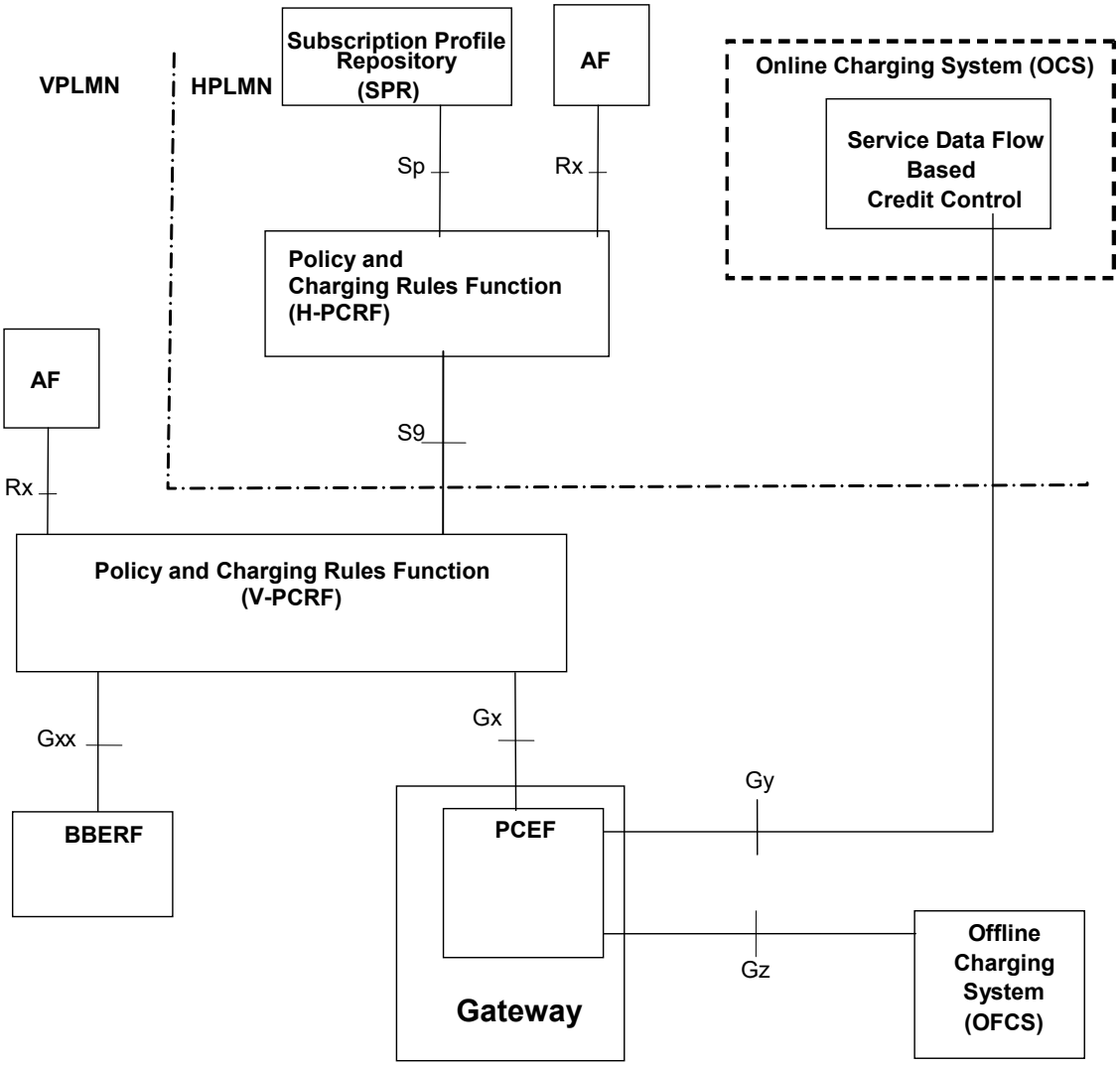

Figure 5.1.3: Overall PCC architecture for roaming with PCEF in visited network (local breakout)

5.2 Reference points

5.2.1 Rx reference point

The Rx reference point resides between the AF and the PCRF.

NOTE: The AF may be a third party application server.

This reference point enables transport of application level session information from AF to PCRF. Such information includes, but is not limited to:

- IP filter information to identify the service data flow for policy control and/or differentiated charging;
- Media/application bandwidth requirements for QoS control.

The Rx reference point enables the AF subscription to notifications on signalling path status of AF session in the IP-CAN.

5.2.2 Gx reference point

The Gx reference point resides between the PCEF and the PCRF.

IPR2024-01041 / IPR2024-01042
Petitioners' Exhibit 1010
Page 000018

The Gx reference point enables a PCRF to have dynamic control over the PCC behaviour at a PCEF.

The Gx reference point enables the signalling of PCC decision, which governs the PCC behaviour, and it supports the following functions:

- Request for PCC decision from PCEF to PCRF;
- Provision of PCC decision from PCRF to PCEF;
- Delivery of IP-CAN-specific parameters from PCRF to PCEF or from PCEF to PCRF;

  This applies only when Gxx is deployed.
- Negotiation of IP-CAN bearer establishment mode (UE-only or UE/NW);
- Termination of Gx session (corresponding to an IP-CAN session) by PCEF or PCRF.

NOTE: The PCRF decision to termination an Gx session is based on operator policies. It should only occur in rare situations (e.g. the removal of a UE subscription) to avoid service interruption due to the termination of the IP-CAN session.

A PCC decision consists of zero or more PCC rule(s) and IP-CAN attributes. The information contained in a PCC rule is defined in clause 6.3.

5.2.3 Sp reference point

The Sp reference point lies between the SPR and the PCRF.

The Sp reference point allows the PCRF to request subscription information related to the IP-CAN transport level policies from the SPR based on a subscriber ID, a PDN identifier and possible further IP-CAN session attributes, see Annex A and Annex D. For example, the subscriber ID can be IMSI. The reference point allows the SPR to notify the PCRF when the subscription information has been changed if the PCRF has requested such notifications. The SPR shall stop sending the updated subscription information when a cancellation notification request has been received from the PCRF.

NOTE: The details associated with the Sp reference point are not specified in this Release.

5.2.4 Gy reference point

The Gy reference point resides between the OCS and the PCEF.

The Gy reference point allows online credit control for service data flow based charging. The functionalities required across the Gy reference point are defined in TS 32.251 [9] and is based on RFC 4006 [4].

For a visited access, the VPLMN may use an OCS proxy between the PCEF and the OCS.

5.2.5 Gz reference point

The Gz reference point resides between the PCEF and the OFCS.

The Gz reference point enables transport of service data flow based offline charging information.

The Gz interface is specified in TS 32.240 [3].

5.2.6 S9 reference point

The S9 reference point resides between a PCRF in the HPLMN (H-PCRF) and a PCRF in the VPLMN (V-PCRF).

For roaming with a visited access (PCEF and, if applicable, BBERF in the visited network), the S9 reference point enables the H-PCRF to (via the V-PCRF):

- have dynamic PCC control, including both the PCEF and, if applicable, BBERF, in the VPLMN;
- deliver or receive IP-CAN-specific parameters from both the PCEF and, if applicable, BBERF, in the VPLMN;

IPR2024-01041 / IPR2024-01042
Petitioners' Exhibit 1010
Page 000019

- serve Rx authorizations and event subscriptions from an AF in the VPLMN.

For roaming with a home routed access, the S9 enables the H-PCRF to provide dynamic QoS control policies from the HPLMN, via a V-PCRF, to a BBERF in the VPLMN.

Editor's note: The designation of this reference points shall be aligned with the final choice in the TS 23.402. The definition of this reference point remains to be completed.

5.2.7 Gxx reference point

The Gxx reference point resides between the PCRF and the BBERF. This reference point corresponds to the Gxa and Gxc, as defined in TS 23.402 [18] and further detailed in the annexes.

The Gxx reference point enables a PCRF to have dynamic control over the BBERF behaviour.

The Gxx reference point enables the signalling of QoS control decisions and it supports the following functions:

- Establishment of Gxx session by BBERF;

  Termination of Gxx session by BBERF or PCRF;

- Establishment of Gateway Control Session by the BBERF;
- Termination of Gateway Control Session by the BBERF or PCRF;
- Request for QoS decision from BBERF to PCRF;
- Provision of QoS decision from PCRF to BBERF;
- Delivery of IP-CAN-specific parameters from PCRF to BBERF or from BBERF to PCRF;
- Negotiation of IP-CAN bearer establishment mode (UE-only and UE/NW).

A QoS control decision consists of zero or more QoS rule(s) and IP-CAN attributes. The information contained in a QoS rule is defined in clause 6.5.

NOTE: The Gxx session serves as a channel for communication between the BBERF and the PCRF. A Gateway Control Session utilizes the Gxx session and operates as defined in TS 23.402 [18], which includes both the alternatives as defined by cases 2a and 2b in clause 7.1.

Editor's note: It is a stage-3 decision whether a single Gateway Control Session corresponds to one Gxx session or multiple Gateway Control Sessions can be supported over a single Gxx session, as long as stage-2 requirements are met.

6 Functional description

6.1 Overall description

6.1.0 General

The PCC architecture works on a service data flow level. The PCC architecture provides the functions for policy and charging control as well as event reporting for service data flows.

6.1.1 Binding mechanism

6.1.1.1 General

The binding mechanism is the procedure that associates a service data flow (defined in a PCC and QoS rule, if applicable, by means of the SDF template), to the IP-CAN bearer deemed to transport the service data flow. For service

IPR2024-01041 / IPR2024-01042
Petitioners' Exhibit 1010
Page 000020

data flows belonging to AF sessions, the binding mechanism shall also associate the AF session information with the IP-CAN bearer that is selected to carry the service data flow.

NOTE 1: The relation between AF sessions and rules depends only on the operator configuration. An AF session can be covered by one or more PCC and QoS rules, if applicable (e.g. one rule per media component of an IMS session). Alternatively, a rule could comprise multiple AF sessions.

NOTE 2: The PCRF may authorize dynamic PCC rules for service data flows without a corresponding AF session. Such PCC rules may be statically configured at the PCRF or dynamically filled with the UE provided traffic mapping information.

The binding mechanism creates bindings. The algorithm, employed by the binding mechanism, may contain elements specific for the kind of IP-CAN.

The binding mechanism includes three steps:

1. Session binding.

2 PCC rule authorization and QoS rule generation, if applicable.

3. Bearer binding.

6.1.1.2 Session binding

Session binding is the association of the AF session information to an IP-CAN session.

The PCRF shall perform the session binding, which shall take the following IP-CAN parameters into account:

a) The UE IP address(es);

b) The UE identity (of the same kind), if present.

NOTE 1: In case the UE identity in the IP-CAN and the application level identity for the user are of different kinds, the PCRF needs to maintain, or have access to, the mapping between the identities. Such mapping is not subject to specification within this TS.

c) The information about the packet data network (PDN) the user is accessing, if present.

NOTE 2: Only a 1:1 mapping between the Rx session and IP-CAN session is supported in this Release.

The PCRF shall identify the PCC rules affected by the AF session information, including new rules to be installed and existing rules to be modified or removed.

6.1.1.3 PCC rule authorization and QoS rule generation

PCC Rule authorization is the selection of the QoS parameters (QCI, ARP, GBR, MBR, etc.) for the PCC rules.

The PCRF shall perform the PCC rule authorization for the dynamic rules belonging to AF sessions that have been selected in step 1, as described in clause 6.1.1.2, as well as for PCC rules without corresponding AF sessions.

The PCC rule authorization depends on the IP-CAN bearer establishment mode of the IP-CAN session and the mode (UE or NW) of the PCC rule:

- In UE/NW bearer establishment mode, the PCRF shall perform the authorization for all PCC rules that are to be handled in NW mode.

- Otherwise, if PCC rules are to be handled in UE mode or when in UE-only bearer establishment mode, the PCRF shall first identify the PCC rules that correspond to a UE resource request and authorize only these.

  The PCRF shall compare the traffic mapping information of the UE resource request with the service data flow filter information of the services that are allowed for the user. Each part of the traffic mapping information shall be evaluated separately in the order of their related precedence. Any matching service data flow filter leads to an authorization of the corresponding PCC rule for the UE resource request unless the PCC rule is already authorized for a more specific traffic mapping information. Since a PCC rule can contain multiple service data

IPR2024-01041 / IPR2024-01042
Petitioners' Exhibit 1010
Page 000021

flow filters it shall be ensured by the PCRF that a service data flow is only authorized for a single UE resource request.

NOTE 3: For example, a PCC rule containing multiple service data flow filters that match traffic mapping information of different UE resource requests could be segmented by the PCRF according to the different matching traffic mapping information. Afterwards, the PCRF can authorize the different PCC rules individually.

If there is any traffic mapping information not matching to any service data flow filter known to the PCRF and the UE is allowed to request for enhanced QoS for traffic not belonging to operator-controlled services, the PCRF shall authorize a new PCC rule by adding this traffic mapping information as service data flow filter. The requested QoS shall be checked against the subscription limitations for traffic not belonging to operator-controlled services.

For an IP-CAN, where the PCRF gains no information about the uplink IP flows (i.e. the UE provided traffic mapping information contains no information about the uplink IP flows), the binding mechanism shall assume that, for bi-directional service data flows, both downlink and uplink packets travel on the same IP-CAN bearer.

Whenever the service data flow template or the UE provided traffic mapping information change, the existing authorizations shall be re-evaluated, i.e. the authorization procedure specified in this clause, is performed. The re-evaluation may, for a service data flow, require a new authorization for a different UE provided mapping information.

For the authorization of a PCC rule the PCRF shall take into account the IP-CAN specific restrictions and other information available to the PCRF. Each PCC rule receives a set of QoS parameters that can be supported by the IP-CAN.

When both a Gx and a Gxx interface exist for an IP-CAN session, the PCRF shall generate QoS rules for all the authorized PCC rules in this step. The PCRF shall ensure consistency between the QoS rules and PCC rules authorized for the same service data flow when QoS rules are derived from corresponding PCC rules.

6.1.1.4 Bearer Binding

Bearer binding is the association of the PCC rule and the QoS rule (if applicable) to an IP-CAN bearer within that IP-CAN session. This function resides in the Bearer Binding Function (BBF).

The Bearer Binding Function is located either at the BBERF or at the PCEF, depending on the architecture (see clause 5.1). The BBF is located at the PCEF if GTP is used as the mobility protocol towards the PCEF; otherwise, the BBF is located at the BBERF.

The Bearer Binding Function may also be located in the PCRF as specified in Annex A and Annex D (e.g. for GPRS running UE only IP-CAN bearer establishment mode).

NOTE 1: For an IP-CAN, limited to a single IP-CAN bearer per IP-CAN session, the bearer is implicit, so finding the IP-CAN session is sufficient for successful binding.

For an IP-CAN which allows for multiple IP-CAN bearers for each IP-CAN session, the binding mechanism shall use the QoS parameters of the existing IP-CAN bearers to create the bearer binding for a rule, in addition to the PCC rule and the QoS rule (if applicable) authorized in the previous step.

The set of QoS parameters assigned in step 2, as described in clause 6.1.1.3, to the service data flow is the main input for bearer binding.

The BBF shall evaluate whether it is possible to use one of the existing IP-CAN bearers or not and whether initiate IP-CAN bearer modification if applicable. If none of the existing bearers are possible to use, the BBF should initiate the establishment of a suitable IP-CAN bearer. The binding is created between service data flow(s) and the IP-CAN bearer which have the same QoS class identifier and ARP.

NOTE 2: The handling of a rule with MBR>GBR is up to operator policy (e.g. an independent IP-CAN bearer may be maintained for that SDF to prevent unfairness between competing SDFs).

If the PCRF needs to perform the bearer binding based on incomplete service information and thus cannot associate a PCC rule with a single IP-CAN bearer, then the PCRF shall generate for the affected service data flow an individual PCC rule per IP-CAN bearer that could carry that service data flow. Once the PCRF receives the complete service

IPR2024-01041 / IPR2024-01042
Petitioners' Exhibit 1010
Page 000022

information, the PCC rule on the IP-CAN bearer with the matching traffic mapping information shall be updated according to the service information. Any other PCC rule(s) previously generated for the same service data flow shall be removed by the PCRF.

NOTE 3: This is required to enable the successful activation or modification of IP-CAN bearers before knowing the intended use of the IP-CAN bearers to carry the service data flow(s).

Requirements, specific for each type of IP-CAN, are defined in the IP-CAN specific Annex.

Whenever the QoS authorization changes, the existing bindings shall be re-evaluated, i.e. the bearer binding procedures specified in this clause, is performed. The re-evaluation may, for a service data flow, require a new binding with another IP-CAN bearer.

6.1.2 Reporting

Reporting refers to the differentiated IP-CAN resource usage information (measured at the PCEF) being reported to the online or offline charging functions.

NOTE 1: Reporting usage information to the online charging function is distinct from credit management. Hence multiple PCC rules may share the same charging key for which one credit is assigned whereas reporting may be at higher granularity if serviced identifier level reporting is used.

The PCEF shall report usage information for online and offline charging.

The PCEF shall report usage information for each charging key value.

The PCEF shall report usage information for each charging key/service identifier combination if service identifier level reporting is requested in the PCC rule.

NOTE 2: For reporting purposes a) the charging key value identifies a service data flow if the charging key value is unique for that particular service data flow and b) if the service identifier level reporting is present then the service identifier value of the PCC rule together with the charging key identify the service data flow.

For the case where the BBF locates in the PCEF, charging information shall be reported based on the result from the service data flow detection and measurement on a per IP-CAN bearer basis.

For the case where the BBF is not located in the PCEF, charging information shall be reported based on the result from the service data flow detection and measurement, separately per QCI and ARP combination (used by any of the active PCC rules).

A report may contain multiple containers, each container associated with a charging key or charging key/service identifier.

6.1.3 Credit management

The credit management applies for online charging only and shall operate on a per charging key basis. The PCEF should initiate one credit management session with the OCS for each IP-CAN Session subject to online charging, unless specified otherwise in an IP-CAN specific annex. Alternatively, the PCEF may initiate one credit management session for each IP-CAN bearer as defined in the applicable annex.

NOTE 1: Independent credit control for an individual service data flow may be achieved by assigning a unique charging key value for the service data flow in the PCC rule.

The PCEF shall request a credit for each charging key occurring in a PCC rule. It shall be up to operator configuration whether the PCEF shall request credit in conjunction with the PCC rule being activated or when the first packet corresponding to the service data flow is detected. The OCS may either grant or deny the request for credit. The OCS shall strictly control the rating decisions.

NOTE 2: The term 'credit' as used here does not imply actual monetary credit, but an abstract measure of resources available to the user. The relationship between this abstract measure, actual money, and actual network resources or data transfer, is controlled by the OCS.

IPR2024-01041 / IPR2024-01042
Petitioners' Exhibit 1010
Page 000023

During IP-CAN session establishment and modification, the PCEF shall request credit using the information after policy enforcement (e.g. upgraded or downgraded QoS information), if applicable, even though the PCEF has not signalled it yet in the IP-CAN.

It shall be possible for the OCS to form a credit pool for multiple (one or more) charging keys, applied at the PCEF, e.g. with the objective of avoiding credit fragmentation. Multiple pools of credit shall be allowed per IP-CAN bearer. The OCS shall control the credit pooling decisions. The OCS shall, when credit authorization is sought, either grant a new pool of credit, together with a new credit limit, or give a reference to a pool of credit that is already granted for that IP-CAN bearer. The grouping of charging keys into pools shall not restrict the ability of the OCS to do credit authorisation and provide termination action individually for each charging key of the pool. It shall be possible for the OCS to group service data flows charged at different rates or in different units (e.g. time/volume/event) into the same pool.

For each charging key, the PCEF may receive credit re-authorisation trigger information from the OCS, which shall cause the PCEF to perform a credit re-authorisation when the event occurs. If there are events which can not be monitored in the PCEF, the PCEF shall provide the information about the required event triggers to the PCRF. If information about required event triggers is provided to the PCRF, it is an implementation option whether a successful confirmation is required from the PCRF in order for the PCEF to consider the credit (re-)authorization procedure to be successful. The credit re-authorisation trigger detection shall cause the PCEF to request re-authorisation of the credit in the OCS. It shall be possible for the OCS to instruct the PCEF to seek re-authorisation of credit in case of the events listed in table 6.1.

Table 6.1: Credit re-authorization triggers

Credit re-authorization trigger	Description
Credit authorisation lifetime expiry	The OCS has limited the validity of the credit to expire at a certain time.
Idle timeout	The service data flow has been empty for a certain time.
PLMN change	The UE has moved to another operators' domain.
QoS changes	The QoS of the IP-CAN bearer has changed.
Change in type of IP-CAN	The type of the IP-CAN has changed.
Location change (serving cell)	The serving cell of the UE has changed.
Location change (serving area) (see note 2)	The serving area of the UE has changed.
Location change (serving CN node) (see note 3)	The serving core network node of the UE has changed.

NOTE 1: This list is not exhaustive. Events specific for each IP-CAN are specified in Annex A, and the protocol description may support additional events.
NOTE 2: A change in the serving area may also result in a change in the serving cell, and possibly a change in the serving CN node.
NOTE 3: A change in the serving CN node may also result in a change in the serving cell, and possibly a change in the serving area.

If the Location change trigger is armed, the relevant IP-CAN specific procedure shall be implemented to report any changes in location to the level indicated by the trigger. If credit-authorization triggers and event triggers require different levels of reporting of location change for a single UE, the location to be reported should be changed to the highest level of detail required. However, there should be no request being triggered for credit re-authorization to the OCS if the report received is more detailed than requested by the OCS.

Some of the re-authorization triggers are related to IP-CAN bearer modifications. IP-CAN bearer modifications, which do not match any credit re-authorization trigger (received from the OCS for the bearer) shall not cause any credit re-authorization interaction with the OCS.

If the PCRF set the Out of credit event trigger (see clause 6.1.4), the PCEF shall inform the PCRF about the PCC rules for which credit is no longer available together with the applied termination action.

6.1.4 Event Triggers

The Event Reporting Function (ERF) performs event trigger detection. When an event matching the event trigger occurs, the ERF shall report the occurred event to the PCRF. The Event Reporting Function is located either at the PCEF or, at the BBERF (if applicable).

The event triggers define the conditions when the ERF shall interact again with PCRF after an IP-CAN session establishment. The event triggers that are required in procedures shall be unconditionally reported from the ERF, while

IPR2024-01041 / IPR2024-01042
Petitioners' Exhibit 1010
Page 000024

the PCRF may subscribe to the remaining events. Whether an event trigger requires a subscription by the PCRF is indicated in column 4 in table 6.2 below.

The PCRF subscribes to event triggers using the Provision of PCC Rules procedure or the Provision of QoS Rules procedure (if applicable). If the provided event triggers are associated with certain parameter values then the ERF shall include those values in the response back to the PCRF. Event triggers are associated with all rules at the ERF of an IP-CAN session (ERF is located at PCEF) or Gateway Control session (ERF is located at BBERF). Event triggers determine when the ERF shall signal to the PCRF that an IP-CAN bearer has been modified. It shall be possible the ERF to react on the event triggers listed in table 6.2.

Table 6.2: Event triggers

Event trigger	Description	Reported from	Condition for reporting
PLMN change	The UE has moved to another operators' domain.	PCEF	PCRF
QoS change	The QoS of the IP-CAN bearer has changed (note 3).	PCEF, BBERF	PCRF
QoS change exceeding authorization	The QoS of the IP-CAN bearer has changed and exceeds the authorized QoS (note 3).	PCEF	PCRF
Traffic mapping information change	The traffic mapping information of the IP-CAN bearer has changed (note 3).	PCEF	Always set
Resource modification request	A request for resource modification has been received by the BBERF/PCEF (note 6).	PCEF, BBERF	Always set
Change in type of IP-CAN (see note 1)	The access type of the IP-CAN bearer has changed.	PCEF	PCRF
Loss/recovery of transmission resources	The IP-CAN transmission resources are no longer usable/again usable.	PCEF, BBERF	PCRF
Location change (serving cell)	The serving cell of the UE has changed.	PCEF, BBERF	PCRF
Location change (serving area) (see note 4)	The serving area of the UE has changed.	PCEF, BBERF	PCRF
Location change (serving CN node) (see note 5)	The serving core network node of the UE has changed.	PCEF, BBERF	PCRF
Out of credit	Credit is no longer available.	PCEF	PCRF
Enforced PCC rule request	PCEF is performing a PCC rules request as instructed by the PCRF.	PCEF	PCRF
UE IP address change	A UE IP address has been allocated/released	PCEF	Always set

NOTE 1: This list is not exhaustive. Events specific for each IP-CAN are specified in clause A.
NOTE 2: A change in the type of IP-CAN may also result in a change in the PLMN.
NOTE 3: Available only when the bearer binding mechanism is allocated to the PCRF.
NOTE 4: A change in the serving area may also result in a change in the serving cell, and a change in the serving CN node.
NOTE 5: A change in the serving CN node may also result in a change in the serving cell, and possibly a change in the serving area.
NOTE 6: Available only when the IP-CAN supports corresponding procedures for bearer independent resource requests.

If the Location change trigger is armed, the relevant IP-CAN specific procedure shall be implemented to report any changes in location to the level indicated by the trigger. If credit-authorization triggers and event triggers require different levels of reporting of location change for a single UE, the location to be reported should be changed to the highest level of detail required. However, there should be no request being triggered for PCC rules or QoS rules (if applicable) update to the PCRF if the report received is more detailed than requested by the PCRF.

IP-CAN bearer modifications, which do not match any event trigger shall cause no interaction with the PCRF.

The QoS change event trigger shall trigger the PCRF interaction for all changes of the IP-CAN bearer QoS. The QoS change exceeding authorization event trigger shall only trigger the PCRF interaction for those changes that exceed the QoS of the IP-CAN bearer that has been authorized by the PCRF previously. The ERF shall check the QoS class identifier and the bandwidth.

The Resource modification request event trigger shall trigger the PCRF interaction for all resource modification requests not tied to a specific IP-CAN bearer received by PCEF/BBERF. The resource modification request received by PCEF/BBERF may include request for guaranteed bit rate changes for a traffic aggregate and/or the association/disassociation of a traffic aggregate with a QCI and/or a modification of a traffic aggregate.

IPR2024-01041 / IPR2024-01042
Petitioners' Exhibit 1010
Page 000025

The enforced PCC rule request event trigger shall trigger a PCEF interaction to request PCC rules from the PCRF for an established IP-CAN session. This PCEF interaction shall take place within the Revalidation time limit set by the PCRF in the IP-CAN session related policy information (clause 6.4).

NOTE: This enforced PCC rule request mechanism can be used to avoid signalling overload situations e.g. due to time of day based PCC rule changes.

The UE IP address change event trigger applies to the PCEF only and shall trigger a PCRF interaction with the PCRF in case a UE IP address is allocated or released during the lifetime of the IP-CAN session.

6.1.5 Policy Control

Policy control comprises functionalities for:

- Binding, i.e. the generation of an association between a service data flow and the IP-CAN bearer transporting that service data flow;
- Gating control, i.e. the blocking or allowing of packets, belonging to a service data flow, to pass through to the desired endpoint;
- Event reporting, i.e. the notification of and reaction to application events to trigger new behaviour in the user plane as well as the reporting of events related to the resources in the GW(PCEF);
- QoS control, i.e. the authorisation and enforcement of the maximum QoS that is authorised for a service data flow or an IP-CAN bearer.
- IP-CAN bearer establishment for IP-CANs that support network initiated procedures for IP-CAN bearer establishment.

In case of an aggregation of multiple service data flows (e.g. for GPRS a PDP context), the combination of the authorised QoS information of the individual service data flows is provided as the authorised QoS for this aggregate.

The enforcement of the authorized QoS of the IP-CAN bearer may lead to a downgrading or upgrading of the requested bearer QoS by the GW(PCEF) as part of a UE-initiated IP-CAN bearer establishment or modification. Alternatively, the enforcement of the authorised QoS may, depending on operator policy and network capabilities, lead to network initiated IP-CAN bearer establishment or modification. If the PCRF provides authorized QoS for both, the IP-CAN bearer and PCC rule(s), the enforcement of authorized QoS of the individual PCC rules shall take place first.

QoS authorization information may be dynamically provisioned by the PCRF or it can be a pre-defined PCC rule in the PCEF. In case the PCRF provides PCC rules dynamically, authorised QoS information for the IP-CAN bearer (combined QoS) may be provided. For a predefined PCC rules within the PCEF the authorized QoS information shall take affect when the PCC rule is activated. The PCEF shall combine the different sets of authorized QoS information, i.e. the information received from the PCRF and the information corresponding to the predefined PCC rules. The PCRF shall know the authorized QoS information of the predefined PCC rules and shall take this information into account when activating them. This ensures that the combined authorized QoS of a set of PCC rules that are activated by the PCRF is within the limitations given by the subscription and operator policies regardless of whether these PCC rules are dynamically provided, predefined or both.

For policy control, the AF interacts with the PCRF and the PCRF interacts with the PCEF as instructed by the AF. For certain events related to policy control, the AF shall be able to give instructions to the PCRF to act on its own, i.e. based on the service information currently available. The following events are subject to instructions from the AF:

- The authorization of the IP-CAN session modification;

NOTE 1: The QoS authorization based on incomplete service information is required for e.g. IMS session setup scenarios with available resources on originating side and a need for resource reservation on terminating side.

- The gate control (i.e. whether there is a common gate handling per AF session or an individual gate handling per AF session component required);
- The forwarding of IP-CAN bearer level information or events:
  - Type of IP-CAN (e.g. GPRS, I-WLAN, etc.);

IPR2024-01041 / IPR2024-01042
Petitioners' Exhibit 1010
Page 000026

- Transmission resource status (established/released/lost);
- Credit denied.

NOTE 2: The credit denied information is only relevant for AFs not performing service charging.

Editor's note: It is FFS how to control whether a service may start on any bearer that could transfer the traffic or whether a bearer dedicated for this traffic is required.

To enable the binding functionality, the UE and the AF shall provide all available flow description information (e.g. source and destination IP address and port numbers and the protocol information). The UE shall use the traffic mapping information to indicate downlink and uplink IP flows.

6.1.6 Service (data flow) Prioritization and Conflict Handling

Service pre-emption priority enables the PCRF to resolve conflicts where the activation of all requested active PCC rules for services would result in a cumulative authorized QoS which exceeds the Subscribed Guaranteed bandwidth QoS.

For example, when supporting network controlled QoS, the PCRF may use the pre-emption priority of a service, the activation of which would cause the subscriber's authorized QoS to be exceeded. If this pre-emption priority is greater than that of any one or more active PCC rules, the PCRF can determine whether the deactivation of any one or more such rules would allow the higher pre-emption priority PCC rule to be activated whilst ensuring the resulting cumulative QoS does not exceed a subscriber's Subscribed Guaranteed Bandwidth QoS.

If such a determination can be made, the PCRF may resolve the conflict by deactivating those selected PCC rules with lower pre-emption priorities and accepting the higher priority service information from the AF. If such a determination cannot be made, the PCRF may reject the service information from the AF.

NOTE: Normative PCRF requirements for conflict handling are not defined. Alternative procedures may use a combination of pre-emption priority and AF provided priority indicator.

6.1.7 Standardized QoS characteristics

6.1.7.1 General

The service level (i.e., per SDF or per SDF aggregate) QoS parameters are QCI, ARP, GBR, and MBR.

Each Service Data Flow (SDF) is associated with one and only one QoS Class Identifier (QCI). For the same IP-CAN session multiple SDFs with the same QCI and ARP can be treated as a single traffic aggregate which is referred to as an SDF aggregate. An SDF is a special case of an SDF aggregate. The QCI is scalar that is used as a reference to node specific parameters that control packet forwarding treatment (e.g. scheduling weights, admission thresholds, queue management thresholds, link layer protocol configuration, etc.) and that have been pre-configured by the operator owning the node (e.g. eNodeB).

6.1.7.2 Standardized QCI characteristics

This clause specifies standardized characteristics associated with standardized QCI values. The characteristics describe the packet forwarding treatment that an SDF aggregate receives edge-to-edge between the UE and the PCEF (see figure 6.1.7-1) in terms of the following performance characteristics:

1 Resource Type (GBR or Non-GBR);

2 Priority;

3 Packet Delay Budget;

4 Packet Error Loss Rate.

IPR2024-01041 / IPR2024-01042
Petitioners' Exhibit 1010
Page 000027

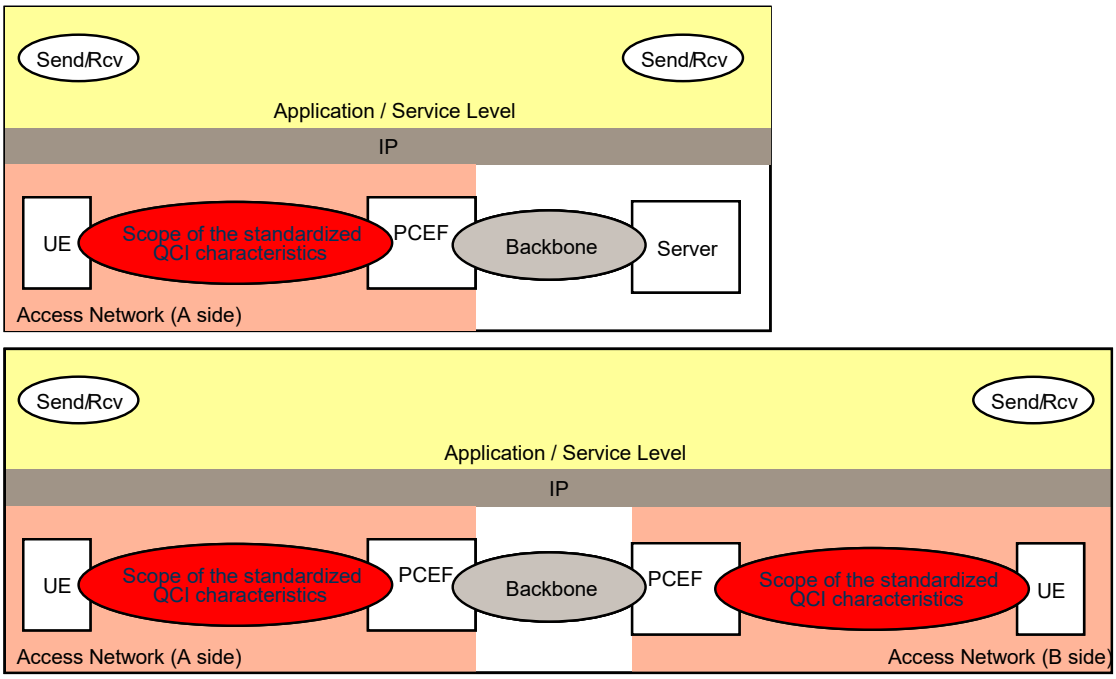

Figure 6.1.7-1: Scope of the Standardized QCI characteristics for client/server (upper figure) and peer/peer (lower figure) communication

The standardized characteristics are not signalled on any interface. They should be understood as guidelines for the pre-configuration of node specific parameters for each QCI. The goal of standardizing a QCI with corresponding characteristics is to ensure that applications / services mapped to that QCI receive the same minimum level of QoS in multi-vendor network deployments and in case of roaming. A standardized QCI and corresponding characteristics is independent of the UE's current access (3GPP or Non-3GPP).

The one-to-one mapping of standardized QCI values to standardized characteristics is captured in table 6.1.7.

IPR2024-01041 / IPR2024-01042
Petitioners' Exhibit 1010
Page 000028

Table 6.1.7: Standardized QCI characteristics

QCI	Resource Type	Priority	Packet Delay Budget (NOTE 1)	Packet Error Loss Rate (NOTE 2)	Example Services
1 (NOTE 3)	GBR	2	100 ms	10^{-2}	Conversational Voice
2 (NOTE 3)		4	150 ms	10^{-3}	Conversational Video (Live Streaming)
3 (NOTE 3)		3	50 ms	10^{-3}	Real Time Gaming
4 (NOTE 3)		5	300 ms	10^{-6}	Non-Conversational Video (Buffered Streaming)
5 (NOTE 3)	Non-GBR	1	100 ms	10^{-6}	IMS Signalling
6 (NOTE 4)		6	300 ms	10^{-6}	Video (Buffered Streaming) TCP-based (e.g., www, e-mail, chat, ftp, p2p file sharing, progressive video, etc.)
7 (NOTE 3)		7	100 ms	10^{-3}	Voice, Video (Live Streaming) Interactive Gaming
8 (NOTE 5)		8	300 ms	10^{-6}	Video (Buffered Streaming) TCP-based (e.g., www, e-mail, chat, ftp, p2p file sharing, progressive video, etc.)
9 (NOTE 6)		9			

NOTE 1: A delay of 20 ms for the delay between a PCEF and a radio base station should be subtracted from a given PDB to derive the packet delay budget that applies to the radio interface. This delay is the average between the case where the PCEF is located "close" to the radio base station (roughly 10 ms) and the case where the PCEF is located "far" from the radio base station, e.g. in case of roaming with home routed traffic (the one-way packet delay between Europe and the US west coast is roughly 50 ms). The average takes into account that roaming is a less typical scenario. It is expected that subtracting this average delay of 20 ms from a given PDB will lead to desired end-to-end performance in most typical cases. Also, note that the PDB defines an upper bound. Actual packet delays - in particular for GBR traffic - should typically be lower than the PDB specified for a QCI as long as the UE has sufficient radio channel quality.

NOTE 2: The rate of non congestion related packet losses that may occur between a radio base station and a PCEF should be regarded to be negligible. A PELR value specified for a standardized QCI therefore applies completely to the radio interface between a UE and radio base station.

NOTE 3: This QCI is typically associated with an operator controlled service, i.e., a service where the SDF aggregate's uplink / downlink packet filters are known at the point in time when the SDF aggregate is authorized. In case of E-UTRAN this is the point in time when a corresponding dedicated EPS bearer is established / modified.

NOTE 4: This QCI could be used for prioritization of specific services according to operator configuration.

NOTE 5: This QCI could be used for a dedicated "premium bearer" (e.g. associated with premium content) for any subscriber / subscriber group. Also in this case, the SDF aggregate's uplink / downlink packet filters are known at the point in time when the SDF aggregate is authorized. Alternatively, this QCI could be used for the default bearer of a UE/PDN for "premium subscribers".

NOTE 6: This QCI is typically used for the default bearer of a UE/PDN for non privileged subscribers. Note that AMBR can be used as a "tool" to provide subscriber differentiation between subscriber groups connected to the same PDN with the same QCI on the default bearer.

The Resource Type determines if dedicated network resources related to a service or bearer level Guaranteed Bit Rate (GBR) value are permanently allocated (e.g. by an admission control function in a radio base station). GBR SDF aggregates are therefore typically authorized "on demand" which requires dynamic policy and charging control. A Non GBR SDF aggregate may be pre-authorized through static policy and charging control.

The Packet Delay Budget (PDB) defines an upper bound for the time that a packet may be delayed between the UE and the PCEF. For a certain QCI the value of the PDB is the same in uplink and downlink. The purpose of the PDB is to support the configuration of scheduling and link layer functions (e.g. the setting of scheduling priority weights and HARQ target operating points). The PDB shall be interpreted as a maximum delay with a confidence level of 98 percent.

IPR2024-01041 / IPR2024-01042
Petitioners' Exhibit 1010
Page 000029

NOTE 1: The PDB denotes a "soft upper bound" in the sense that an "expired" packet, e.g. a link layer SDU that has exceeded the PDB, does not need to be discarded (e.g. by RLC in E-UTRAN). The discarding (dropping) of packets is expected to be controlled by a queue management function, e.g. based on pre-configured dropping thresholds.

Services using a Non-GBR QCI should be prepared to experience congestion related packet drops, and 98 percent of the packets that have not been dropped due to congestion should not experience a delay exceeding the QCI's PDB. This may for example occur during traffic load peaks or when the UE becomes coverage limited. See Annex J for details. Packets that have not been dropped due to congestion may still be subject to non congestion related packet losses (see PELR below).

Services using a GBR QCI and sending at a rate smaller than or equal to GBR can in general assume that congestion related packet drops will not occur, and 98 percent of the packets shall not experience a delay exceeding the QCI's PDB. Exceptions (e.g. transient link outages) can always occur in a radio access system which may then lead to congestion related packet drops even for services using a GBR QCI and sending at a rate smaller than or equal to GBR. Packets that have not been dropped due to congestion may still be subject to non congestion related packet losses (see PELR below).

Every QCI (GBR and Non-GBR) is associated with a Priority level. Priority level 1 is the highest Priority level. The Priority levels shall be used to differentiate between SDF aggregates of the same UE, and it shall also be used to differentiate between SDF aggregates from different UEs. Via its QCI an SDF aggregate is associated with a Priority level and a PDB. Scheduling between different SDF aggregates shall primarily be based on the PDB. If the target set by the PDB can no longer be met for one or more SDF aggregate(s) across all UEs that have sufficient radio channel quality then Priority shall be used as follows: in this case a scheduler shall meet the PDB of SDF aggregates on Priority level N in preference to meeting the PDB of SDF aggregates on Priority level N+1.

NOTE 2: The definition (or quantification) of "sufficient radio channel quality" is out of the scope of 3GPP specifications.

NOTE 3: In case of E-UTRAN a QCI's Priority level may be used as the basis for assigning the uplink priority per Radio Bearer (see TS 36.300 [19] for details).

The Packet Error Loss Rate (PELR) defines an upper bound for the rate of SDUs (e.g. IP packets) that have been processed by the sender of a link layer protocol (e.g. RLC in E-UTRAN) but that are not successfully delivered by the corresponding receiver to the upper layer (e.g. PDCP in E-UTRAN). Thus, the PELR defines an upper bound for a rate of non congestion related packet losses. The purpose of the PELR is to allow for appropriate link layer protocol configurations (e.g. RLC and HARQ in E-UTRAN). For a certain QCI the value of the PELR is the same in uplink and downlink.

NOTE 4: The characteristics PDB and PELR are specified only based on application / service level requirements, i.e., those characteristics should be regarded as being access agnostic, independent from the roaming scenario (roaming or non-roaming), and independent from operator policies.

6.1.7.3 Allocation and Retention Priority characteristics

The QoS parameter ARP contains information about the priority level, the pre-emption capability and the pre-emption vulnerability. The priority level defines the relative importance of a resource request. This allows deciding whether a bearer establishment or modification request can be accepted or needs to be rejected in case of resource limitations (typically used for admission control of GBR traffic). It can also be used to decide which existing bearers to pre-empt during resource limitations.

The range of the ARP priority level is 1 to 15 with 1 as the highest level of priority. The pre-emption capability information defines whether a service data flow can get resources that were already assigned to another service data flow with a lower priority level. The pre-emption vulnerability information defines whether a service data flow can lose the resources assigned to it in order to admit a service data flow with higher priority level. The pre-emption capability and the pre-emption vulnerability can be either set to 'yes' or 'no'.

6.1.8 Termination Action

The termination action applies only in case of online charging. The termination action indicates the action, which the PCEF should perform when no more credit is granted. A packet that matches a PCC rule, indicating a charging key for which no credit has been granted, is subject to a termination action.

IPR2024-01041 / IPR2024-01042
Petitioners' Exhibit 1010
Page 000030

The defined termination actions include:

- Allowing the packets to pass through;
- Dropping the packets;
- The PCEF Default Termination Action;
- The re-direction of packets to an application server (e.g. defined in the termination action).

NOTE 1: Such a re-direction may cause an application protocol specific asynchronous close event and application protocol specific procedures may be required in the UE and/or AF in order to recover, e.g. as specified in RFC 2616 for HTTP.

The Default Termination Action for all charging keys, for which no more credit is granted and there is no specific termination action shall be pre-configured in the PCEF according to operator's policy. For instance, the default behaviour may consist of allowing packets of any terminated service data flow to pass through the PCEF.

The OCS may provide a termination action for each charging key over the Gy interface. Any previously provided termination action may be overwritten by the OCS. A termination action remains valid and shall be applied by the PCEF until all the corresponding PCC rules of that charging key are removed or the corresponding IP-CAN bearer is removed (for GPRS the PDP context).

The OCS shall provide the termination action to the PCEF before denying credit; otherwise the PCEF default termination action will be performed.

6.2 Functional entities

6.2.1 Policy Control and Charging Rules Function (PCRF)

6.2.1.0 General

The PCRF encompasses policy control decision and flow based charging control functionalities.

The PCRF provides network control regarding the service data flow detection, gating, QoS and flow based charging (except credit management) towards the PCEF.

The PCRF shall apply the security procedures, as required by the operator, before accepting service information from the AF.

The PCRF shall decide how a certain service data flow shall be treated in the PCEF, and ensure that the PCEF user plane traffic mapping and treatment is in accordance with the user's subscription profile.

If Gxx applies, the PCRF shall provide QoS rules with identical service data flow templates as provided to the PCEF in the PCC rules. If the service data flow is tunnelled at the BBERF, the PCRF shall provide the BBERF with information received from the PCEF to enable the service data flow detection in the mobility tunnel at the BBERF.

The PCRF should for an IP-CAN session derive, from IP-CAN specific restrictions, operator policy and SPR data, the list of permitted QoS class identifiers and associated GBR and MBR limits for the IP-CAN session.

The PCRF may check that the service information provided by the AF is consistent with both the operator defined policy rules and the related subscription information as received from the SPR during IP-CAN session establishment before storing the service information. The service information shall be used to derive the QoS for the service. The PCRF may reject the request received from the AF when the service information is not consistent with either the related subscription information or the operator defined policy rules and as a result the PCRF shall indicate that this service information is not covered by the subscription information or by operator defined policy rules and may indicate, in the response to the AF, the service information that can be accepted by the PCRF (e.g. the acceptable bandwidth). In the absence of other policy control mechanisms outside the scope of PCC, it is recommended that the PCRF include this information in the response.

In this Release, the PCRF supports only a single Rx reference point, i.e. there is one AF for each AF session.

IPR2024-01041 / IPR2024-01042
Petitioners' Exhibit 1010
Page 000031

The PCRF authorizes QoS resources. The PCRF uses the service information received from the AF (e.g. SDP information or other available application information) and/or the subscription information received from the SPR to calculate the proper QoS authorization (QoS class identifier, bitrates). The PCRF may also take into account the requested QoS received from the PCEF via Gx interface.

NOTE 1: The PCRF provides always the maximum values for the authorized QoS even if the requested QoS is lower than what can be authorized.

The Authorization of QoS resources shall be based on complete service information unless the PCRF is required to perform the authorization of QoS resources based on incomplete service information. The PCRF shall after receiving the complete service information, update the affected PCC rules accordingly.

The PCRF may use the subscription information as basis for the policy and charging control decisions. The subscription information may apply for both session based and non-session based services.

The PCRF determines whether a Gx session from the PCEF is to be linked with a Gateway Control Session from the BBERF by matching the IP address(es) and conditionally the UE Identity and PDN ID towards open Gateway Control Sessions.

If the BBERF does not provide any PDN ID at the Gateway Control Session Establishment, then the PCRF maintains Gateway Control Session to Gx session linking to the Gx sessions where the assigned CoA and UE Identity (if available over Gxx) are equal. The PCRF and BBERF shall be capable of separating information for each IP-CAN session within the common Gateway Control Session.

If the BBERF provides a PDN ID at the Gateway Control Session Establishment, then the PCRF maintains Gateway Control Session to Gx session linking where the UE identity and PDN ID are equal.

The PCRF determines which case applies as described on clause 7.1.

If an AF requests the PCRF to report on the signalling path status, for the AF session, the PCRF shall, upon indication of loss of resources from the PCEF, for PCC rules corresponding to the signalling traffic notify the AF on changes to the signalling path status. The PCRF needs to have the knowledge of which PCC rules identify signalling traffic.

To support the different IP-CAN bearer establishment modes (UE-only or UE/NW) the PCRF shall:

- shall set the IP-CAN bearer establishment mode for the IP-CAN session based on operator configuration, network and UE capabilities;

- shall, if the bearer establishment mode is UE/NW, decide what mode (UE or NW) shall apply for a PCC rule and resolve race conditions between for requests between UE-initiated and NW-initiated requests;

NOTE 2: For an operator-controlled service, the UE and the PCRF may be provisioned with information indicating which mode is to be used.

- may reject a UE request that is already served by a NW-initiated procedure in progress. When rejecting a UE-initiated request by sending a reject indication, the PCRF shall use an appropriate cause value which shall be delivered to the UE.

NOTE 3: This situation may e.g. occur if the PCRF has already triggered a NW-initiated procedure that corresponds to the UE request.

- guarantee the precedence of dynamic PCC rules for network controlled services in the service data flow detection process at the PCEF by setting the PCC rule precedence information to appropriate values.

If an AF requests the PCRF to report on the change of type of IP-CAN, the PCRF shall provide to the AF the information about the IP-CAN type the user is currently using and upon indication of change of IP-CAN type, notify the AF on changes of the type of IP-CAN. In the case of 3GPP IP-CAN, the information of the Radio Access Technology Type (e.g. UTRAN) shall be also reported to the AF.

If Gxx applies and the PCEF provided information about required event triggers, the PCRF shall provide these event triggers to the BBERF and notify the PCEF of the outcome of the provisioning procedure by using the PCRF initiated IP-CAN Session Modification procedure, as defined in clause 7.4.2. The PCRF shall include the parameter values received in the response from the BBERF in the notification to the PCEF.

When the PCRF gets an event report from the BBERF that is required by the PCEF, the PCRF shall forward this event report to the PCEF.

IPR2024-01041 / IPR2024-01042
Petitioners' Exhibit 1010
Page 000032

6.2.1.1 Input for PCC decisions

The PCRF shall accept input for PCC decision-making from the PCEF, the BBERF if present, the SPR and if the AF is involved, from the AF, as well as the PCRF may use its own pre-defined information. These different nodes should provide as much information as possible to the PCRF. At the same time, the information below describes examples of the information provided. Depending on the particular scenario all the information may not be available or is already provided to the PCRF.

The PCEF and/or BBERF may provide the following information:

- Subscriber Identifier;
- IP address(es) of the UE;
- IP-CAN bearer attributes;
- Request type (initial, modification, etc.);
- Type of IP-CAN (e.g. GPRS, I-WLAN, etc.);

NOTE 1: The Type of IP-CAN parameter should allow extension to include new types of accesses.

- Location of the subscriber;

NOTE 2: See clause 6.1.4 for the description of this location information.

- A PDN ID;
- A PLMN identifier;
- IP-CAN bearer establishment mode.

NOTE 3: Depending on the type of IP-CAN, the limited update rate for the location information at the PCEF may lead to a UE moving outside the area indicated in the detailed location information without notifying the PCEF.

The SPR may provide the following information for a subscriber, connecting to a specific PDN:

- Subscriber's allowed services, i.e. list of Service IDs;
- For each allowed service, a pre-emption priority;
- Information on subscriber's allowed QoS, including:
  - the Subscribed Guaranteed Bandwidth QoS;
  - a list of QoS class identifiers together with the MBR limit and, for real-time QoS class identifiers, GBR limit.
- Subscriber's charging related information;
- Subscriber category.

The AF, if involved, may provide the following application session related information, e.g. based on SIP and SDP:

- Subscriber Identifier;
- IP address of the UE;
- Media Type;
- Media Format, e.g. media format sub-field of the media announcement and all other parameter information (a= lines) associated with the media format;
- Bandwidth;
- Flow description, e.g. source and destination IP address and port numbers and the protocol;
- AF Application Identifier;

IPR2024-01041 / IPR2024-01042
Petitioners' Exhibit 1010
Page 000033

- AF Communication Service Identifier (e.g. IMS Communication Service Identifier), UE provided via AF;
- AF Application Event Identifier;
- AF Record Information;
- Flow status (for gating decision);
- Priority indicator, which may be used by the PCRF to guarantee service for an application session of a higher relative priority;
- Emergency indicator.

In addition, the pre-defined information in the PCRF may contain additional rules based on charging policies in the network, whether the subscriber is in its home network or roaming, depending on the IP-CAN bearer attributes.

The QoS Class Identifier (see clause 6.3.1) in the PCC rule is derived by the PCRF from AF or SPR interaction if available. The input can be SDP information or other available application information, in line with operator policy.

The Allocation/Retention Priority in the PCC Rule is derived by the PCRF from AF or SPR interaction if available, in line with operator policy.

6.2.1.2 Subscription information management in the PCRF

The PCRF may request subscription information from the SPR for an IP-CAN session at establishment. The PCRF should specify the subscriber ID and the PDN identifier in the request. The PCRF should retain the subscription information that is relevant for PCC decisions until the IP-CAN session termination.

The PCRF may request notifications from the SPR on changes in the subscription information. Upon reception of a notification, the PCRF shall make the PCC decisions necessary to accommodate the change in the subscription and updates the PCEF by providing the new PCC decisions if needed. The PCRF shall send a cancellation notification request to the SPR when the related subscription information has been deleted.

6.2.1.3 V-PCRF

6.2.1.3.1 General

The V-PCRF (Visited-Policy and Charging Rules Function) is a functional element that encompasses policy and charging control decision functionalities in the V-PLMN. The V-PCRF includes functionality for both home routed access and visited access (local breakout).

The V-PCRF determines based on the subscriber identity if a request is for a roaming user.

A Gateway Control Session request received over the Gxx reference point may trigger a request over the S9 reference point from the V-PCRF to the H-PCRF.

If a Gateway Control Session establishment request is received that can not be bound to an existing Gx session then the associated IP-CAN session is either home routed or it is visited access but the IP-CAN session establishment request has not yet been received over Gx.

For this case the V-PCRF may determine based on PDN-Id carried in the GW control session and roaming agreements if the request shall be proxied to the H-PCRF over S9 or not. The V-PCRF may choose not to proxy the Gateway Control Session Establishment only if the PDN-Id indicates the request is for visited access.

The Gateway Control Session Establishment request should only be proxied to the H-PCRF over S9 in case the V-PCRF is configured to do so e.g. based on roaming agreement.

NOTE: Proxying the Gateway Control Session Establishment makes the H-PCRF aware of the Gateway Control Session and enables binding in case a subsequent IP-CAN Session is established with home routed access or visited access.

If the V-PCRF determines that a Gateway Control Session Establishment shall be proxied to the H-PCRF over S9 then the reply from the H-PCRF shall also be communicated back to the GW(BBERF) over Gxx.

IPR2024-01041 / IPR2024-01042
Petitioners' Exhibit 1010
Page 000034

In case the V-PCRF determines that a Gateway Control Session Establishment request shall not be proxied, then the V-PCRF shall respond to the request made by the GW(BBERF) without notifying the H-PCRF.

If an IP-CAN session establishment request is received for a roaming user over the Gx reference point, then the V-PCRF shall conclude that the IP-CAN session use visited access and act as described in clause 6.2.1.3.3.

If a Gateway Control and QoS rules provision is received by the V-PCRF over the S9 reference point for a Gateway Control session which is not associated, at the V-PCRF, with an existing Gx session, the V-PCRF shall conclude that the IP-CAN session associated with the Gateway Control session is home routed, and act as described in clause 6.2.1.3.2.

6.2.1.3.2 V-PCRF and Home Routed Access

The V-PCRF provides functions to proxy Gxx interactions between the BBERF and the H-PCRF as follows:

- Gateway Control Session establishment and termination;
- Gateway Control and QoS Policy Rules Provision;
- Gateway Control and QoS Rule Request.

The V-PCRF provides functions to enforce visited operator policies regarding QoS authorization requested by the home operator as indicated by the roaming agreements. The V-PCRF informs the H-PCRF when a request has been denied and may provide the acceptable QoS Information.

Within an IP-CAN session, a different V-PCRF may be selected when a new Gateway Control Session is established.

6.2.1.3.3 V-PCRF and Visited Access (local breakout)

The V-PCRF provides functions to:

- Enforce visited operator policies regarding QoS authorization requested by the home operator for a certain service as indicated by the roaming agreements. The V-PCRF informs the H-PCRF when a request has been denied and may provide the acceptable QoS Information for the service.
- When Gxx interaction is terminated locally at the V-PCRF, perform Gx to Gateway Control Session linking.
- When Gxx interaction is terminated locally at the V-PCRF, extract QoS rules (defined in clause 6.5) from PCC rules (defined in clause 6.3) provided by the H-PCRF over the S9 reference point. The V-PCRF provides updated PCC rules to the PCEF and QoS rules to the BBERF, if appropriate.
- For the case of AF in the VPLMN:
  - Proxy Rx authorizations over the S9 reference point to the H-PCRF;
  - Relay event subscriptions and notifications between the H-PCRF and V-AF

Editor's note: It is FFS whether the V-PCRF should provide functionality to add local (pre-configured) PCC rules to an IP-CAN session and/or QoS rules to a Gateway Control Session.

When Gx interactions are proxied between the PCEF and the H-PCRF, the V-PCRF proxies:

- Indication of IP-CAN Session Establishment and Termination;
- Policy and Charging Rule Provisioning;
- Request Policy and Charging Rules.

If a Gateway Control Session is used and if during the IP-CAN Session Establishment the Gateway Control Session Establishment procedure was proxied to the H-PCRF (according to the logic in clause 6.2.1.3.1), then the V-PCRF shall also proxy the Gateway Control Session Termination procedure to the H-PCRF. In addition, the V-PCRF proxies:

- QoS Rules Provisioning;
- Request for QoS Rules.

IPR2024-01041 / IPR2024-01042
Petitioners' Exhibit 1010
Page 000035

If the Gateway Control Session was not proxied to the H-PCRF then the V-PCRF shall handle all Gateway Control Session procedures locally and not proxy them to the H-PCRF. This has the following implications:

- An IP-CAN Session modification may trigger the V-PCRF to update the Gateway Control Session if required in order to maintain the alignment of PCC and QoS Rules.
- An IP-CAN Session termination procedure may trigger the V-PCRF to terminate the Gateway Control Session if the Gateway Control Session was established for the purpose of a single IP-CAN session. Otherwise a Gateway Control and QoS Rules Provision procedure may be initiated to remove the QoS Rules associated with the IP-CAN session.
- A Gateway Control and QoS Rules Request procedure may trigger an IP-CAN Session modification.

NOTE: For this case the V-PCRF would initiate a Policy and Charging Rules Request over S9 to the H-PCRF. The PCC Rules in the Acknowledge IP-CAN Session Modification message received in response from the H-PCRF would be used to form QoS Rules for the Gateway Control session. The PCC Rules would be communicated to the PCEF by means of a (V-)PCRF initiated IP-CAN Session modification procedure.

When Rx components are proxied between an AF in the VPLMN and the H-PCRF, the V-PCRF shall proxy service session information between the AF and the H-PCRF.

The V-PCRF shall install event triggers in the PCEF and in the BBERF so that they agree with the event triggers provided for the IP-CAN session by the H-PCRF over S9. If a Gateway Control Session is used then the V-PCRF may install additional event triggers in the BBERF that are relevant only to the V-PCRF. Event reports over Gxx that are relevant only to the V-PCRF shall not trigger an IP-CAN session modification over S9.

Within an IP-CAN session the same V-PCRF remains for the whole lifetime of the IP-CAN session.

6.2.1.4 H-PCRF

6.2.1.4.1 General

The H-PCRF (Home-Policy and Charging Rules Function) is a functional element that encompasses policy and charging control decision functionalities in the H-PLMN and in the VPLMN. The H-PCRF includes functionality for both home routed access and visited access (local breakout).

If a Gateway Control Session is used and a Gateway Control Session Establishment is indicated over S9, then one or more of the following cases applies:

1. One (or several) home routed IP-CAN sessions are known to the H-PCRF that can be bound to the Gateway Control session. For such IP-CAN sessions, the H-PCRF shall act as described in clause 6.2.1.4.2.
2. No IP-CAN session is known to the H-PCRF that can be bound to the Gateway Control session. This is the case when an IP-CAN session establishment process has not yet been initiated over Gx or S9.

If an IP-CAN Session Establishment is received over Gx then the H-PCRF shall conclude that the IP-CAN session is home routed and act as described in clause 6.2.1.4.2.

If an IP-CAN Session Establishment is received over S9 then the H-PCRF shall conclude that the IP-CAN session use visited access and act as described in clause 6.2.1.4.3.

6.2.1.4.2 H-PCRF and Home Routed Access

The H-PCRF shall use the S9 reference point to proxy information to the BBERF via the V-PCRF for the following related Gxx procedures:

- Gateway Control Session establishment and termination;
- Gateway Control and QoS Policy Rules Provision;
- Gateway Control and QoS Rule Request.

IPR2024-01041 / IPR2024-01042
Petitioners' Exhibit 1010
Page 000036

If an IP-CAN session termination is received over the Gx reference point, then the H-PCRF shall initiate a Gateway Control Session Termination procedure over S9 if the Gateway Control Session was established for the purpose of a single IP-CAN session. Otherwise a Gateway Control and QoS Rules Provision procedure may be initiated over S9 to remove the QoS Rules in the BBERF associated with the IP-CAN session.

6.2.1.4.3 H-PCRF and Visited Access (Local Breakout)

The H-PCRF shall use the S9 reference point to proxy information to the PCEF (and indirectly also to the BBERF when the Gateway Control Session is not proxied to the H-PCRF) via the V-PCRF for the following related Gx procedures:

- Indication of IP-CAN Session Establishment and Termination messages;
- Policy and Charging Rule Provisioning messages;
- Request Policy and Charging Rules messages.

When the Gateway Control Session is proxied to the H-PCRF, the H PCRF shall use the S9 reference point to proxy information to the BBERF via the V PCRF for the following related Gxx procedures:

- Indication of Gateway Control Session Establishment and Termination messages;
- QoS Rules Provisioning messages;
- Request QoS Rules messages.

The H-PCRF should generate PCC rules for both of the cases when the AF is located in the VPLMN and when the AF is located in the HPLMN. The H-PCRF provides the PCC rules to the V-PCRF over the S9 reference point.

6.2.1.5 Handling of Multiple BBERFs associated with the same IP-CAN session

In case the PCRF determines that there is more than one BBERF associated with the same IP-CAN session, which only occurs during handovers, the PCRF handles the multiple BBERFs as follows:

- The PCRF classifies the BBERF which reports the same IP-CAN type as that reported by the PCEF as the primary BBERF and the other BBERF(s) as non-primary BBERF(s). In case there are more than one BBERFs that report the same IP-CAN type as that reported by the PCEF, the BBERF that last created the GW Control Session with the PCRF is classified as the primary BBERF and other BBERF(s) are classified as non-primary BBERF(s).
- When a new (primary/non-primary) BBERF supporting NW/UE bearer establishment mode creates a GW Control session, the PCRF provides all the existing active QoS rules to the new BBERF. When a new (primary/non-primary) BBERF supporting only UE bearer establishment mode creates a GW Control session, the PCRF authorizes the setup of the default bearer and only pushes down QoS rules in response to specific requests from the BBERF.

NOTE: To facilitate the UE's determination of which pre-existing IP flows have QoS resources setup in the target access, the use of mechanisms such global filter IDs (that remain unchanged between the source and target access or require the target access to not change filters provided to the UE), is recommended.

- The PCRF keeps track of QoS rules activation by all the BBERFs. The PCRF updates PCC rules to the PCEF based on activation status of QoS rules in the primary BBERF.
- If the primary-BBERF reports failure to activate a QoS rule, the PCRF also removes the same QoS rule from the non-primary BBERFs and the corresponding PCC rule from the PCEF. If a non-primary BBERF reports failure to install a QoS rule, the PCRF updates the status for that particular BBERF in its record but does not perform any further action.
- When path-switch occurs and the PCEF informs the PCRF of a new IP-CAN type, the PCRF keeps (and, if necessary, updates) only those PCC rules in the PCEF which have been activated by the new primary BBERF with an acknowledgement provided to the PCRF.
- For the case of UE initiated resource reservation through the non-primary BBERF: If a non-primary BBERF request results in a change of the QoS rules active in the primary-BBERF, e.g. creation of a new QoS rule or results in modification of an existing QoS rule, then the PCRF shall reject the request.

IPR2024-01041 / IPR2024-01042
Petitioners' Exhibit 1010
Page 000037

6.2.2 Policy and Charging Enforcement Function (PCEF)

6.2.2.1 General

The PCEF encompasses service data flow detection, policy enforcement and flow based charging functionalities.

This functional entity is located at the Gateway (e.g. GGSN in the GPRS case, and PDG in the WLAN case). It provides service data flow detection, user plane traffic handling, triggering control plane session management (where the IP-CAN permits), QoS handling, and service data flow measurement as well as online and offline charging interactions.

A PCEF shall ensure that an IP packet, which is discarded at the PCEF as a result from policy enforcement or flow based charging, is neither reported for offline charging nor cause credit consumption for online charging.

NOTE: For certain cases e.g. suspected fraud an operator shall be able to block the service data flow but still be able to account for any packets associated with any blocked service data flow.

The PCEF is enforcing the Policy Control as indicated by the PCRF in two different ways:

- Gate enforcement. The PCEF shall allow a service data flow, which is subject to policy control, to pass through the PCEF if and only if the corresponding gate is open;
- QoS enforcement:
  - QoS class identifier correspondence with IP-CAN specific QoS attributes. The PCEF shall be able to convert a QoS class identifier value to IP-CAN specific QoS attribute values and determine the QoS class identifier value from a set of IP-CAN specific QoS attribute values.
  - PCC rule QoS enforcement. The PCEF shall enforce the authorized QoS of a service data flow according to the active PCC rule (e.g. to enforce uplink DSCP marking).
  - IP-CAN bearer QoS enforcement. The PCEF controls the QoS that is provided to a combined set of service data flows. The policy enforcement function ensures that the resources which can be used by an authorized set of service data flows are within the "authorized resources" specified via the Gx interface by "authorized QoS". The authorized QoS provides an upper bound on the resources that can be reserved (GBR) or allocated (MBR) for the IP-CAN bearer. The authorized QoS information is mapped by the PCEF to IP-CAN specific QoS attributes.

The PCEF is enforcing the charging control in the following way:

- For a service data flow (defined by an active PCC rule) that is subject to charging control, the PCEF shall allow the service data flow to pass through the PCEF if and only if there is a corresponding active PCC rule with and, for online charging, the OCS has authorized credit for the charging key. The PCEF may let a service data flow pass through the PCEF during the course of the credit re-authorization procedure.

For a service data flow (defined by an active PCC rule) that is subject to both Policy Control and Charging Control, the PCEF shall allow the service data flow to pass through the PCEF if and only if the right conditions from both policy control and charging control happen. I.e. the corresponding gate is open and in case of online charging the OCS has authorized credit for its charging key.

For a service data flow (defined by an active PCC rule) that is subject to policy control only and not charging control, the PCEF shall allow the service data flow to pass through the PCEF if and only if the conditions for policy control are met.

A PCEF may be served by one or more PCRF nodes. The PCEF shall contact the appropriate PCRF based on the packet data network (PDN) connected to, together with, a UE identity information (if available, and which may be IP-CAN specific). It shall be possible to ensure that the same PCRF is contacted for a specific UE irrespective of the IP-CAN used.

The PCEF shall, on request from the PCRF, modify a PCC rule, using the equivalent PCEF behaviour as the removal of the old and the activation of the new (modified) PCC rule. The PCEF shall modify a PCC rule as an atomic operation. The PCEF shall not modify a predefined PCC rule on request from the PCRF.

The PCEF should support predefined PCC rules.

For online charging, the PCEF shall manage credit as defined in clause 6.1.3.

IPR2024-01041 / IPR2024-01042
Petitioners' Exhibit 1010
Page 000038

The operator may apply different PCC rules depending on different PLMN. The PCEF shall be able to provide identifier of serving network to the PCRF, which may be used by the PCRF in order to select the PCC rule to be applied.

The operator may configure whether Policy and Charging Control is to be applied based on different access point.

The PCEF shall gather and report IP-CAN bearer usage information according to clause 6.1.2. The PCEF may have a pre-configured Default charging method. Upon the initial interaction with the PCRF, the PCEF shall provide pre-configured Default charging method if available.

At IP-CAN session establishment the PCEF shall initiate the IP-CAN Session Establishment procedure, as defined in clause 7.2. In case the SDF is tunnelled at the BBERF, the PCEF shall inform the PCRF about the mobility protocol tunnelling header of the service data flows. If no PCC rule was activated for the IP-CAN session the PCEF shall reject the IP-CAN session establishment.

If there is no PCC rule active for a successfully established IP-CAN session at any later point in time, e.g., through a PCRF initiated IP-CAN session modification, the PCEF shall initiate an IP-CAN session termination procedure, as defined in clause 7.3.2. If the PCRF terminates the Gx session, the PCEF shall initiate an IP-CAN session termination procedure, as defined in clause 7.3.2.

If there is no PCC rule active for a successfully established IP-CAN bearer at any later point in time, e.g., through a PCRF initiated IP-CAN session modification, the PCEF shall initiate an IP-CAN bearer termination procedure, as defined in clause 7.4.1.

If the IP-CAN session is modified, e.g. by changing the characteristics for an IP-CAN bearer, the PCEF shall first use the event trigger to determine whether to request the PCC rules for the modified IP-CAN session from the PCRF; afterwards, the PCEF shall use the re-authorisation triggers, if available, in order to determine whether to require re-authorisation for the PCC rules that were either unaffected or modified. If the PCEF receives an unsolicited update of the PCC rules from the PCRF (IP-CAN session modification, clause 7.4.2), the PCC rules shall be activated, modified or removed as indicated by the PCRF.

The PCEF shall inform the PCRF about the outcome of a PCC rule operation. If network initiated procedures apply for the PCC rule and the corresponding IP-CAN bearer can not be established or modified to satisfy the bearer binding, then the PCEF shall reject the activation of a PCC rule.

NOTE: In case of a rejection of a PCC rule activation the PCRF may e.g. modify the attempted PCC rule, de-activate or modify other PCC rules and retry activation or abort the activation attempt and, if applicable, inform the AF that transmission resources are not available.

If network initiated procedures for IP-CAN bearer establishment apply this also includes provisioning the UE with uplink traffic mapping information. See Annex A and Annex D for details.

If another IP-CAN session is established by the same user, this is treated independently from the existing IP-CAN session.

To support the different IP-CAN bearer establishment modes (UE-only or UE/NW) the PCEF shall:

- forward the network and UE capabilities to the PCRF;
- apply the IP-CAN bearer establishment mode for the IP-CAN session set by the PCRF.

During an IP-CAN session modification, the PCEF shall provide information (belonging to the IP-CAN bearer established or modified) to the PCRF as follows:

- in UE-only bearer establishment mode, the PCEF shall send the full QoS and traffic mapping information;
- in UE/NW bearer establishment mode, the PCEF shall:
  - at UE-initiated bearer establishment, send the full QoS and traffic mapping information;
  - at UE-initiated bearer modification, send information on the requested change to QoS bitrates and changes to the traffic mapping information;
- at NW-initiated bearer establishment or modification, the PCEF shall not send any QoS or traffic mapping information.

IPR2024-01041 / IPR2024-01042
Petitioners' Exhibit 1010
Page 000039

If there are events which can not be monitored in the PCEF, the PCEF shall provide the information about the required event triggers to the PCRF using the PCEF initiated IP-CAN Session Modification procedure, as defined in clause 7.4.1, or in the response to a PCRF initiated IP-CAN Session Modification, as defined in clause 7.4.3. If the triggers were provided by the OCS at credit authorization, it is an implementation option whether a successful confirmation is required from the PCRF in order for the PCEF to consider the credit (re-)authorization procedure to be successful.

IP-CAN-specific parameters may be sent by the PCRF to the PCEF or the PCEF to the PCRF. The IP-CAN Session Modification procedure may be used to deliver these parameters to allow interaction between the BBERF and the PCEF by way of the PCRF. This is required in accesses that require these parameters to be sent indirectly.

6.2.2.2 Service data flow detection

This clause refers to the detection process that identifies the packets belonging to a service data flow:

- Each PCC rule contains a service data flow template, which defines the data for the service data flow detection;
- Each service data flow template may contain any number of service data flow filters;
- Service data flow filters are unidirectional, so that the detection is applied independently for the downlink and uplink directions.

NOTE 1: A service data flow template may include service data flow filters for one direction, or for both directions.

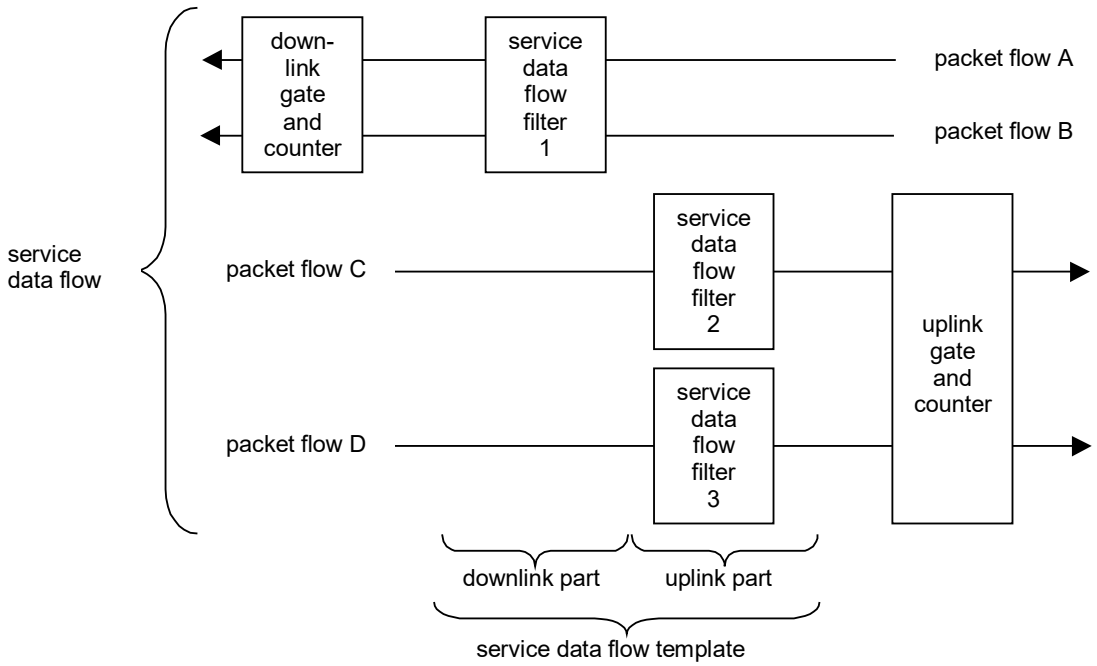

Figure 6.3: Relationship of service data flow, packet flow, service data flow template and service data flow filter

Service data flow filters identifying the service data flow may:

- be a pattern for matching the IP 5 tuple (source IP address, destination IP address, source port number, destination port number, protocol ID of the protocol above IP). In the pattern:
  - a value left unspecified in a filter matches any value of the corresponding information in a packet;
  - an IP address may be combined with a prefix mask;
  - port numbers may be specified as port ranges.
  - the pattern can be extended by the Type of Service (TOS) (IPv4) / Traffic class (IPv6) and Mask;

IPR2024-01041 / IPR2024-01042
Petitioners' Exhibit 1010
Page 000040

- consist of the destination IP address, protocol ID of the protocol above IP, the Type of Service (TOS) (IPv4) / Traffic class (IPv6) and Mask and the IPSec Security Parameter Index (SPI);
- consist of the destination IP address, the Type of Service (TOS) (IPv4) / Traffic class (IPv6) and Mask and the Flow Label (IPv6).

NOTE 2: The details about the IPSec Security Parameter Index (SPI), the Type of Service (TOS) (IPv4) / Traffic class (IPv6) and Mask and the Flow Label (IPv6) are defined in TS 23.060 [12] clause 15.3.

- extend the packet inspection beyond the possibilities described above and look further into the packet and/or define other operations (e.g. maintaining state). Such service data flow filters must be predefined in the PCEF.

NOTE 3: Such filters may be used to support filtering with respect to a service data flow based on the transport and application protocols used above IP. This shall be possible for HTTP and WAP. This includes the ability to differentiate between TCP, Wireless-TCP according to WAP 2.0, WDP, etc, in addition to differentiation at the application level. Filtering for further application protocols and services may also be supported.

For downlink traffic, the downlink parts of all the service data flow templates associated with the IP-CAN session for the destination address are candidates for matching in the detection process.

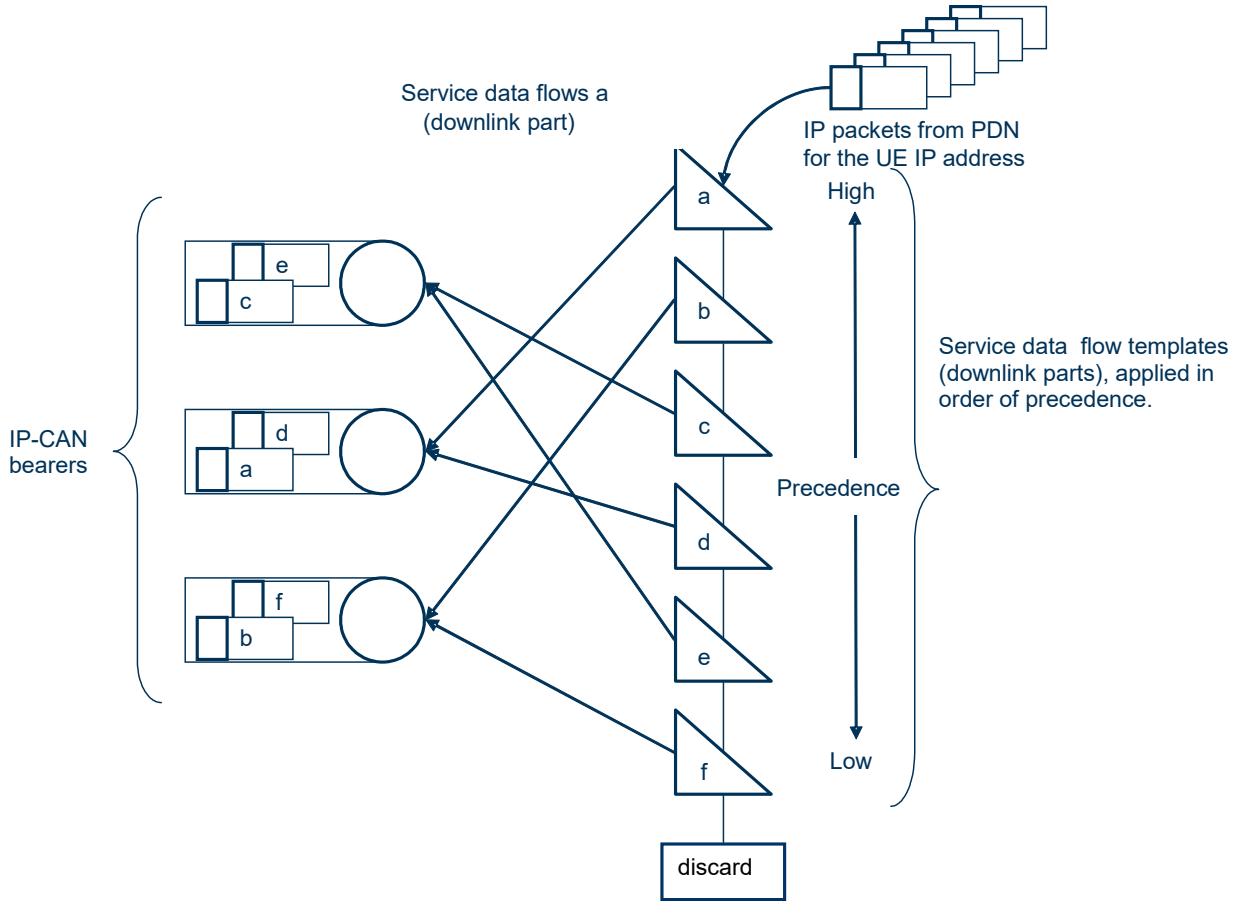

Figure 6.4: The service data flow template role in detecting the downlink part of a service data flow and mapping to IP-CAN bearers

For uplink traffic, the uplink parts of all the service data flow templates associated with the IP-CAN bearer (details according to clause A), are candidates for matching in the detection process.

IPR2024-01041 / IPR2024-01042
Petitioners' Exhibit 1010
Page 000041

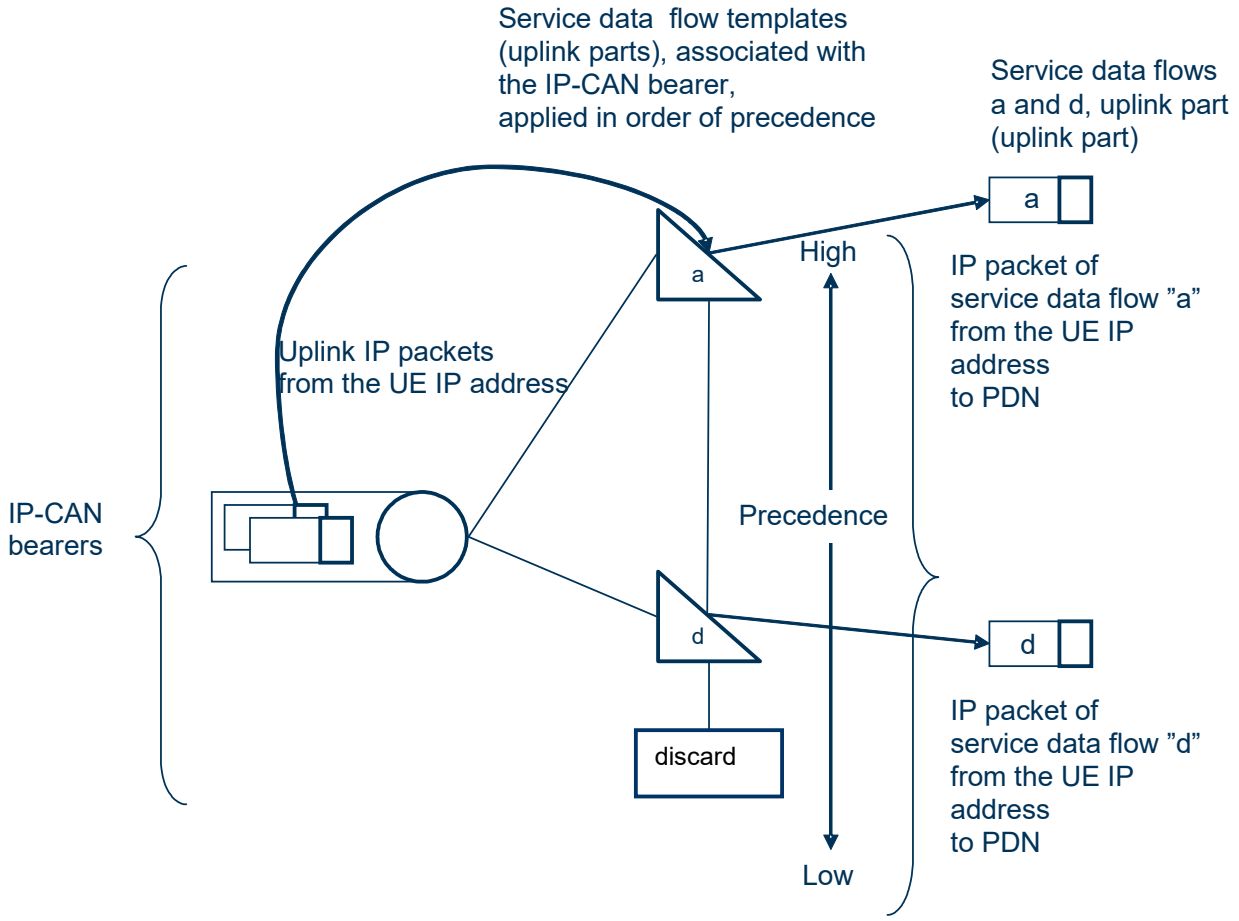

Figure 6.5: The service data flow template role in detecting the uplink part of a service data flow

The PCEF shall discard a packet in case there is no service data flow filter of the same direction (i.e. of the IP-CAN session for the downlink or of the IP-CAN bearer for the uplink) detecting the packet.

NOTE 4: For the uplink direction, discarding packets due to no matching service data flow template is also referred to as uplink bearer binding verification. For the case a BBERF is present, uplink bearer binding verification is done by the BBERF.

NOTE 5: To avoid the PCEF discarding packets due to no matching service data flow template, the operator may apply open PCC rules (with wild-carded service data flow filters) to allow for the passage of packets that do not match any other candidate service data flow template.

Service data flow filters shall be applied in the order of their precedence.

6.2.2.3 Measurement

The PCEF shall support data volume, duration, combined volume/duration and event based measurement. The Measurement method indicates what measurement type is applicable for the PCC rule.

NOTE: Event based charging is only applicable to pre-defined PCC rules.

The PCC measurement measures all the user plane traffic, except traffic that PCC causes to be discarded.

The PCEF shall maintain a measurement per IP-CAN bearer (IP-CAN specific details according to Annex A and Annex D), and Charging Key combination.

If Service identifier level reporting is mandated in a PCC rule, the PCEF shall maintain a measurement for that Charging Key and Service Identifier combination, for the IP-CAN bearer (IP-CAN specific details according to Annex A and Annex D).

IPR2024-01041 / IPR2024-01042
Petitioners' Exhibit 1010
Page 000042

NOTE: In addition, the GW may maintain IP-CAN bearer level measurement if required by the operator.

6.2.2.4 QoS control

The PCEF enforces the authorized QoS for an IP-CAN bearer according to the information received via the Gx interface and depending on the bearer establishment mode.

Only the GBR per bearer is used for resource reservation (e.g. admission control in the RAN). The MBR (per PCC rule / per bearer) is used for rate policing.

For a UE-initiated IP-CAN bearer establishment or modification the PCEF receives the authorized QoS (QCI, ARP, GBR, MBR) for a bearer that the PCEF has identified for the PCRF. The PCEF shall enforce it which may lead to a downgrading or upgrading of the requested bearer QoS.

For a network initiated IP-CAN bearer establishment or modification the PCEF receives the authorized QoS per PCC rule (QCI, ARP, GBR, MBR). For GBR bearers the PCEF should set the bearer's GBR to the sum of the GBRs of all PCC rules that are active and bound to that GBR bearer. For GBR bearers the PCEF should set the bearer's MBR to the sum of the MBRs of all PCC rules that are active and bound to that GBR bearer.

For an IP-CAN that supports non-GBR bearers that have a separate MBR (e.g. GPRS) the PCEF may, before or in connection with activation of the first PCC rule with a certain QCI, receive the authorized QoS (QCI, MBR) for that QCI. The authorized MBR per QCI only applies to non-GBR bearers, and it sets an upper limit for the MBR that the PCEF assigns to a non-GBR bearer with that QCI. In case multiple IP-CAN bearers within the same IP-CAN session are assigned the same QCI, the authorized MBR per QCI applies independently to each of those IP-CAN bearers. The PCRF may change the authorized MBR per QCI at any time. An authorized GBR per QCI shall not be signalled on Gx.

NOTE: The intention of the authorized MBR per QCI is to avoid frequent IP-CAN bearer modifications as PCC rules are dynamically activated and deactivated. That is, the PCEF may choose to assign the authorized MBR per QCI to a non-GBR bearer with that QCI.

6.2.3 Application Function (AF)

The Application Function (AF) is an element offering applications that require dynamic policy and/or charging control over the IP-CAN user plane behaviour. The AF shall communicate with the PCRF to transfer dynamic session information, required for PCRF decisions as well as to receive IP-CAN specific information and notifications about IP-CAN bearer level events. One example of an AF is the P-CSCF of the IM CN subsystem.

The AF may receive an indication that the service information is not accepted by the PCRF together with service information that the PCRF would accept. In that case, the AF rejects the service establishment towards the UE. If possible the AF forwards the service information to the UE that the PCRF would accept.

An AF may communicate with multiple PCRFs. The AF shall contact the appropriate PCRF based on either:

- the end user IP Address; and/or
- a UE identity that the AF is aware of.

NOTE 1: By using the end user IP address, an AF is not required to acquire any UE identity in order to provide information, for a specific user, to the PCRF.

In case of private IP address being used for the end user, the AF may send additional PDN information (e.g. PDN ID) over the Rx interface. This PDN information is used by the PCRF for session binding, and it is also used to help selecting the correct PCRF.

For certain events related to policy control, the AF shall be able to give instructions to the PCRF to act on its own, i.e. based on the service information currently available as described in clause 6.1.5.

The AF may use the IP-CAN bearer level information in the AF session signalling or to adjust the IP-CAN bearer level event reporting.

The AF may request the PCRF to report on the signalling path status for the AF session. The AF shall cancel the request when the AF ceases handling the user.

IPR2024-01041 / IPR2024-01042
Petitioners' Exhibit 1010
Page 000043

NOTE 2: The QoS authorization based on incomplete service information is required for e.g. IMS session setup scenarios with available resources on originating side and a need for resource reservation on terminating side.

The AF may request the PCRF to report on the change of type of IP-CAN. In the case of 3GPP IP-CAN, the information of the Radio Access Technology Type (e.g. UTRAN) shall be also reported to the AF.

6.2.4 Subscription Profile Repository (SPR)

The SPR logical entity contains all subscriber/subscription related information needed for subscription-based policies and IP-CAN bearer level PCC rules by the PCRF. The SPR may be combined with or distributed across other databases in the operator's network, but those functional elements and their requirements for the SPR are out of scope of this document.

NOTE: The SPR's relation to existing subscriber databases is not specified in this Release.

The SPR may provide the following subscription profile information (per PDN, which is identified by the PDN identifier):

- Subscriber's allowed services;
- For each allowed service, a pre-emption priority;
- Information on subscriber's allowed QoS, including the Subscribed Guaranteed Bandwidth QoS;
- Subscriber's charging related information (e.g. location information relevant for charging);
- Subscriber category.

6.2.5 Service Data Flow Based Credit Control Function

The Service Data Flow Based Credit Control Function performs online credit control functions. It is a functional entity within the Online Charging System.

The Online Charging System is specified in TS 32.240 [3].

The OCS may trigger the PCEF to initiate a IP-CAN bearer service termination at any point in time.

NOTE: As the OCS performs the credit control per charging key basis (and thus has not necessarily the knowledge about the existence of any specific service data flow), it is recommended to use different charging keys for any service data flows that shall not be unintentionally interrupted.

There may be several OCSs in a PLMN. The default OCS addresses (i.e. the primary address and secondary address) shall be locally pre-configured within the PCEF. OCS addresses may also be passed once per IP-CAN session from the PCRF to the PCEF. The OCS addresses provided by the PCRF shall have a higher priority than the pre-configured ones.

6.2.6 Offline Charging System (OFCS)

The Offline Charging System is specified in TS 32.240 [3].

There may be several OFCSs in a PLMN. The default OFCS addresses (i.e. the primary address and secondary address) shall be locally pre-configured within the PCEF. OFCS addresses may also be passed once per IP-CAN session from the PCRF to the PCEF. The addresses provided by the PCRF shall have a higher priority than the pre-configured ones.

6.2.7 Bearer Binding and Event Reporting Function (BBERF)

6.2.7.1 General

The BBERF includes the following functionalities:

- Bearer binding.

IPR2024-01041 / IPR2024-01042
Petitioners' Exhibit 1010
Page 000044

- Uplink bearer binding verification.
- Event reporting to the PCRF.
- Sending or receiving IP-CAN-specific parameters, to or from the PCRF.

6.2.7.2 Service data flow detection

The service data flow detection at the BBERF is identical to the detection at PCEF with the following modifications:

- If the service data flow is tunnelled at the BBERF, the BBERF uses information on the mobility protocol tunnelling header provided by the PCRF and the QoS rules to detect the service data flows.

For the uplink direction, the BBERF applies QoS rules with a bearer binding to the bearer that the packet arrived on. The uplink bearer binding verification is successful if there is a QoS rule with a matching uplink SDF filter. The BBERF shall discard packets for which the uplink bearer binding verification fails.

6.2.7.3 QoS Control

The ARP, GBR, MBR and QCI are used by the BBERF in the same way as in the PCEF for resource reservation.

When access network is not utilizing QCI based QoS parameters, the BBERF shall be able to convert a QoS class identifier value to QoS attribute values used in the access network and determine the QoS class identifier value from a set of QoS attribute values used in the access network.

NOTE: The definition of the mapping between QCI and Non 3GPP access specific QoS is outside of scope for 3GPP.

The BBERF controls the QoS that is provided to a combined set of service data flows. BBERF ensures that the resources which can be used by an authorized set of service data flows are within the "authorized resources" specified via the Gxx interface by "authorized QoS". The authorized QoS provides an upper bound on the resources that can be reserved (GBR) or allocated (MBR) for the service data flows.

In order to support the different IP-CAN bearer establishment modes (UE-only or UE/NW), the BBERF shall support the same procedures for handling different IP-CAN bearer establishment modes as specified for the PCEF in clause 6.2.2.1.

6.3 Policy and charging control rule

6.3.1 General

The Policy and charging control rule (PCC rule) comprises the information that is required to enable the user plane detection of, the policy control and proper charging for a service data flow. The packets detected by applying the service data flow template of a PCC rule are designated a service data flow.

Two different types of PCC rules exist: Dynamic rules and predefined rules. The dynamic PCC rules are provisioned by the PCRF via the Gx reference point, while the predefined PCC rules are directly provisioned into the PCEF and only referenced by the PCRF.

NOTE 1: The procedure for provisioning predefined PCC rules is out of scope for this TS.

NOTE 2: There may be another type of predefined rules that are not explicitly known in the PCRF and not under the control of the PCRF. The operator may define such predefined PCC rules, to be activated by the PCEF on one IP-CAN bearer within the IP-CAN session. The PCEF may only activate such predefined PCC rules if there is no UE provided traffic mapping information related to that IP-CAN bearer. The IP-CAN session termination procedure deactivates such predefined PCC rules.

There are defined procedures for activation, modification and deactivation of PCC rules (as described in clause 6.3.2). The PCRF may activate, modify and deactivate a PCC rule at any time, over the Gx reference point. However, the modification procedure is applicable to dynamic PCC rules only.

IPR2024-01041 / IPR2024-01042
Petitioners' Exhibit 1010
Page 000045

Each PCC rule shall be installed for a single IP-CAN bearer only, i.e. PCC rules containing completely identical information shall receive different PCC rule identifiers (an exception are predefined PCC rules that contain only uplink service data flow filters and which are known to the PCRF, see clause 6.3.2).

The operator defines the PCC rules.

Table 6.3 lists the information contained in a PCC rule, including the information name, the description and whether the PCRF may modify this information in a dynamic PCC rule which is active in the PCEF. The Category field indicates if a certain piece of information is mandatory or not for the construction of a PCC rule, i.e. if it is possible to construct a PCC rule without it.

IPR2024-01041 / IPR2024-01042
Petitioners' Exhibit 1010
Page 000046

Table 6.3: The PCC rule information

Information name	Description	Category	PCRF permitted to modify for a dynamic PCC rule in the PCEF
Rule identifier	Uniquely identifies the PCC rule, within an IP-CAN session. It is used between PCRF and PCEF for referencing PCC rules.	Mandatory	no
Service data flow detection	*This clause defines the method for detecting packets belonging to a service data flow.*		
Precedence	Determines the order, in which the service data flow templates are applied at service data flow detection.	Mandatory	yes
Service data flow template	A list of service data flow filters for the detection of the service data flow.	Mandatory	yes
Charging	*This clause defines identities and instructions for charging and accounting that is required for an access point where flow based charging is configured*		
Charging key	The charging system (OCS or OFCS) uses the charging key to determine the tariff to apply for the service data flow.		yes
Service identifier	The identity of the service or service component the service data flow in a rule relates to.		yes
Charging method	Indicates the required charging method for the PCC rule. Values: online, offline or neither.	Conditional (NOTE 4)	no
Measurement method	Indicates whether the service data flow data volume, duration, combined volume/duration or event shall be measured. This is applicable for reporting, if the charging method is online or offline. Note: Event based charging is only applicable to pre-defined PCC rules.		yes
Application Function Record Information	An identifier, provided from the AF, correlating the measurement for the Charging key/Service identifier values in this PCC rule with application level reports.		no
Service identifier level reporting	Indicates that separate usage reports shall be generated for this Service identifier. Values: mandated or not required		Yes

IPR2024-01041 / IPR2024-01042
Petitioners' Exhibit 1010
Page 000047

Information name	Description	Category	PCRF permitted to modify for a dynamic PCC rule in the PCEF
Policy control	*This clause defines how the PCEF shall apply policy control for the service data flow.*		
Gate status	The gate status indicates whether the service data flow, detected by the service data flow template, may pass (Gate is open) or shall be discarded (Gate is closed) at the PCEF.		Yes
QoS class identifier	Identifier for the authorized QoS parameters for the service data flow. Values: see NOTE 1.	Conditional (NOTE 2)	Yes
UL-maximum bitrate	The uplink maximum bitrate authorized for the service data flow	Conditional (NOTE 3)	Yes
DL-maximum bitrate	The downlink maximum bitrate authorized for the service data flow	Conditional (NOTE 3)	Yes
UL-guaranteed bitrate	The uplink guaranteed bitrate authorized for the service data flow		Yes
DL-guaranteed bitrate	The downlink guaranteed bitrate authorized for the service data flow		Yes
ARP	The Allocation and Retention Priority for the service data flow consisting of the priority level, the pre-emption capability and the pre-emption vulnerability	Conditional (NOTE 5)	Yes

NOTE 1: The QoS class identifier is scalar and accommodates the need for differentiating QoS in all types of 3GPP IP-CAN. The value range is expandable to accommodate additional types of IP-CAN.
NOTE 2: The QoS class identifier is mandatory when the bearer binding is allocated to the PCEF.
NOTE 3: Mandatory when policy control on SDF level applies.
NOTE 4: Mandatory if there is no default charging method for the IP-CAN session.
NOTE 5: Mandatory when policy control on SDF level applies unless otherwise stated in an access-specific Annex.

The *PCC Rule identifier* shall be unique for a PCC rule within an IP-CAN session. A dynamically provided PCC rule that has the same Rule identifier value as a predefined PCC rule shall replace the predefined rule within the same IP-CAN session.

The *PCC Service data flow template* may comprise any number of Service data flow filters. A Service data flow filter contains information for matching user plane packets. A Service data flow filter, provided from the PCRF, contains information elements as described in clause 6.2.2.2. The Service data flow template filtering information within an activated PCC rule is applied at the PCEF to identify the packets belonging to a particular service data flow.

NOTE 3: Predefined PCC rules may include service data flow filters, which support extended capabilities, including enhanced capabilities to identify events associated with application protocols.

The *PCC Precedence* defines in what order the activated PCC rules within the same IP-CAN session shall be applied at the PCEF for service data flow detection. When a dynamic PCC rule and a predefined PCC rule have the same precedence, the dynamic PCC rule takes precedence.

NOTE 4: The operator shall ensure that overlap between the predefined PCC rules can be resolved based on precedence of each predefined PCC rule in the PCEF. The PCRF shall ensure that overlap between the dynamically allocated PCC rules can be resolved based on precedence of each dynamically allocated PCC rule. Further information about the configuration of the PCC rule precedence is described in Annex G.

For downlink packets all the service data flow templates, activated for the IP-CAN session shall be applied for service data flow detection and for the mapping to the correct IP-CAN bearer. For uplink packets the service data flow templates activated on their IP-CAN bearer shall be applied for service data flow detection.

IPR2024-01041 / IPR2024-01042
Petitioners' Exhibit 1010
Page 000048

The *PCC Charging key* is the reference to the tariff for the service data flow. Any number of PCC Rules may share the same charging key value. The charging key values for each service shall be operator configurable.

NOTE 5: Assigning the same Charging key for several service data flows implies that the charging does not require the credit management to be handled separately.

The *PCC Service identifier* identifies the service. PCC Rules may share the same service identifier value. The service identifier provides the most detailed identification, specified for flow based charging, of a service data flow.

NOTE 6: The PCC service identifier need not have any relationship to service identifiers used on the AF level, i.e. is an operator policy option.

The PCC *Charging method* indicates whether online charging, offline charging, or both are required or the service data flow is not subject to any end user charging. If the PCC charging method identifies that the service data flow is not subject to any end user charging, a PCC Charging key shall not be included in the PCC rule for that service data flow, along with other charging related parameters. If the PCC charging method is omitted the PCEF shall apply the default charging method as determined at IP-CAN session establishment (see clause 6.4). The PCC Charging method is mandatory if there is no default charging method for the IP-CAN session.

The *PCC Measurement method* indicates what measurements apply for charging for PCC rule.

The PCC Service Identifier Level *Reporting* indicates whether the PCEF shall generate reports per Service Identifier. The PCEF shall accumulate the measurements from all PCC rules with the same combination of Charging key/Service identifier values in a single report.

The PCC *Application function record information* identifies an instance of service usage. A subsequently generated usage report, generated as a result of the PCC rule, may include the Application function record information, if available. The Application Function Record Information may contain the AF Charging Identifier and/or the Flow identifiers. The report is however not restricted to include only usage related to the Application function record information reported, as the report accumulates the usage for all PCC rules with the same combination of Charging key/Service identifier values. If exclusive charging information related to the Application function record information is required, the PCRF shall provide a service identifier, not used by any other PCC rule of the IP-CAN session at this point in time, for the AF session.

NOTE 7: For example, the PCRF may be configured to maintain a range of service identifier values for each service which require exclusive per instance charging information. Whenever a separate counting or credit management for an AF session is required, the PCRF shall select a value, which is not used at this point in time, within that range. The uniqueness of the service identifier in the PCEF ensures a separate accounting/credit management while the AF record information identifies the instance of the service.

The PCC *Gate* indicates whether the PCEF shall let a packet matching the PCC Service data flow template, pass through (gate is open) the PCEF or the PCEF shall discard (gate is closed) the packet.

NOTE 8: A packet, matching a PCC Rule with an open gate, may be discarded due to credit management reasons.

The *QoS Class Identifier* for the service data flow. The QoS class identifier represents the QoS parameters for the service data flow. The PCEF maintains the mapping between QoS class identifier and the QoS concept applied within the specific IP-CAN. The bitrate information is separate from the QoS class identifier value.

The bitrates indicate the authorized bitrates at the IP packet level of the SDF, i.e. the bitrates of the IP packets before any IP-CAN specific compression or encapsulation.

The *UL maximum-bitrate* indicates the authorized maximum bitrate for the uplink component of the service data flow.

The *DL maximum-bitrate* indicates the authorized maximum bitrate for the downlink component of the service data flow.

The *UL guaranteed-bitrate* indicates the authorized guaranteed bitrate for the uplink component of the service data flow.

The *DL guaranteed-bitrate* indicates the authorized guaranteed bitrate for the downlink component of the service data flow.

The 'Maximum bitrate' is used for enforcement of the maximum bit rate that the SDF may consume, while the 'Guaranteed bitrate' is used by the PCEF to determine resource allocation.

IPR2024-01041 / IPR2024-01042
Petitioners' Exhibit 1010
Page 000049

The *Allocation/Retention Priority* indicates the priority of allocation and retention of the service data flow. The ARP contains information about the priority level, the pre-emption capability and the pre-emption vulnerability. The Allocation/Retention Priority resolves conflicts of demands for network resources.

6.3.2 Policy and charging control rule operations

Policy and charging control rule operations consist of activation, modification and de-activation of PCC rules.

Activation of a dynamic PCC rule provides the PCC rule information to the PCEF via the Gx reference point.

Activation of a predefined PCC rule provides an identifier of the relevant PCC rule to the PCEF via the Gx reference point.

Activation of a predefined PCC rule, not known in the PCRF, may be done by the PCEF based on operator policy. The PCEF may only activate such predefined PCC rule if there are no UE provided traffic mapping information related to the IP-CAN bearer.

An active PCC rule means that:

- the service data flow template shall be used for service data flow detection;
- the service data flow template shall be used for mapping of downlink packets to the IP-CAN bearer determined by the bearer binding;
- the service data flow template shall be used for service data flow detection of uplink packets on the IP-CAN bearer determined by the bearer binding;
- usage data for the service data flow shall be recorded(further details can be found in clause 6.1.2 Reporting and clause 6.1.3 Credit Management);
- policies associated with the PCC rule, if any, shall be invoked.

A predefined PCC rule is known at least, within the scope of one access point.

NOTE 1: The same predefined PCC rule can be activated for multiple IP-CAN bearers in multiple IP-CAN sessions.

A predefined PCC rule that contains downlink service data flow filters can only be activated once per IP-CAN session. A predefined PCC rule that contains only uplink service data flow filters can be activated for multiple IP-CAN bearers of the same IP-CAN session (deactivation of such a predefined PCC rule would remove this PCC rule from every IP-CAN bearer).

The PCRF may, at any time, modify an active, dynamic PCC rule.

The PCRF may, at any time, deactivate an active PCC rule in the PCEF via the Gx reference point. At IP-CAN bearer termination all active PCC rules on that bearer are deactivated without explicit instructions from the PCRF to do so.

Policy and charging control rule operations can be also performed in a deferred mode. For this case, the PCRF shall indicate a time at which the PCC rule operation shall be performed by the PCEF.

The PCRF shall always provide complete PCC rules when the deferred mode is used. If a deferred PCC rule operation is received by the PCEF and there is already a stored PCC rule operation with the same PCC Rule Identifier, this newly received PCC rule operation shall replace the stored PCC rule operation. If a PCC rule operation (non-deferred) is received for a PCC rule which has a pending deferred PCC rule operation, the deferred PCC rule operation shall no longer be valid.

Deferred activation and deactivation of PCC rules can only be used for PCC rules that belong to the IP-CAN bearer without traffic mapping information.

NOTE 2: This limitation prevents dependencies on the signalling of changed traffic mapping information towards the UE.

Deferred modification of PCC rules shall not be applied for changes of the QoS or service data flow filter information of PCC rules.

IPR2024-01041 / IPR2024-01042
Petitioners' Exhibit 1010
Page 000050

6.4 IP-CAN bearer and IP-CAN session related policy information

The purpose of the IP-CAN bearer and IP-CAN session related policy information is to provide policy and charging control related information that is applicable to a single IP-CAN bearer or the whole IP-CAN session respectively. The PCRF provides the IP-CAN bearer and IP-CAN session related policy information to the PCEF and BBERF (if applicable) using the PCC rule and QoS rule (if applicable) provision procedure. The IP-CAN bearer related policy information may be provided together with rules or separately.

Table 6.4 lists the PCC related IP-CAN bearer and IP-CAN session related policy information.

Table 6.4: PCC related IP-CAN bearer and IP-CAN session related policy information

Attribute	Description	PCRF permitted to modify the attribute	Scope
Charging information (NOTE 2)	Defines the containing OFCS and/or OCS addresses.	No	IP-CAN session
Default charging method (NOTE 2)	Defines the default charging method for the IP-CAN session.	No	IP-CAN session
Event trigger	Defines the event(s) that shall cause a re-request of PCC rules for the IP-CAN bearer.	Yes	IP-CAN session
Authorized QoS per bearer (UE-initiated IP-CAN bearer activation/modification) (NOTE 1)	Defines the authorised QoS for the IP-CAN bearer (QCI, GBR, MBR).	Yes	IP-CAN bearer
Authorized MBR per QCI (network initiated IP-CAN bearer activation/modification) (NOTE 1) (NOTE 3)	Defines the authorised MBR per QCI.	Yes	IP-CAN session
Revalidation time limit	Defines the time period within which the PCEF shall perform a PCC rules request.	Yes	IP-CAN session

NOTE 1: Depending on the bearer establishment mode only one Authorized QoS information has to be used.
NOTE 2: These attributes should not be provided to BBERF.
NOTE 3: This attribute is only applicable when the IP-CAN supports non-GBR bearers that have a separate MBR (e.g. for GPRS).

Upon the initial interaction with the PCEF, the PCRF may provide Charging information containing OFCS and/or OCS addresses to the PCEF defining the offline and online charging system addresses respectively. These shall override any possible predefined addresses at the PCEF.

Upon the initial interaction with the PCEF, the PCRF may provide Default charging method indicating what charging method shall be used in the IP-CAN session for every PCC rule where the charging method identifier is omitted, including predefined PCC rules that are activated by the PCEF.

Upon every interaction with the ERF, the PCRF may provide event triggers for the IP-CAN session. Event triggers are used to determine which IP-CAN bearer modification causes the ERF to re-request PCC rules. The triggers are listed in clause 6.1.4.

The semantics of the authorized QoS per bearer (UE-initiated IP-CAN bearer activation/modification) and the authorized MBR per QCI (network initiated IP-CAN bearer activation/modification) are captured in clause 6.2.2.4.

The Revalidation time limit defines the time period within which the PCEF shall trigger a request for PCC rules for an established IP-CAN session.

IPR2024-01041 / IPR2024-01042
Petitioners' Exhibit 1010
Page 000051

6.5 Quality of Service Control rule

6.5.1 General

The Quality of Service control rule (QoS rule) comprises the information that is required to enable the user plane detection of the QoS control for a service data flow in the BBERF. The packets detected by applying the service data flow template of a QoS rule are designated a service data flow.

The PCRF shall ensure that each PCC rule in the PCEF has a corresponding active QoS rule in the BBERF. The QoS rule shall contain the same service data flow template, precedence and the QoS information as the corresponding PCC rule.

NOTE: During the course of a BBERF change procedure the BBERF might not be able to maintain the correspondence throughout the procedure. The post-condition for the procedure shall however be that corresponding PCC and QoS rules are active at the PCEF and BBERF.

There are defined procedures for activation, modification and deactivation of QoS rules (as described in clause 6.5.2). The PCRF may activate, modify and deactivate a QoS rule over the Gxx reference point.

The QoS rules are derived from the PCC rules.

Table 6.5 lists the information contained in a QoS rule, including the information name and whether the PCRF may modify this information in a QoS rule which is active in the BBERF. For the IE description, refer to clause 6.3.1. The Category field indicates if a certain piece of information is mandatory or not for the construction of a QoS rule, i.e. if it is possible to construct a QoS rule without it.

Table 6.5: The QoS rule information

Information name	Category	PCRF permitted to modify for an active QoS rule in the BBERF
Rule identifier (NOTE 1)	Mandatory	No
Service data flow detection		
Precedence	Mandatory	Yes
Service data flow template	Mandatory	Yes
QoS control		
QoS class identifier (NOTE 2)	Mandatory	Yes
UL-maximum bitrate	Conditional (NOTE 3)	Yes
DL-maximum bitrate	Conditional (NOTE 3)	Yes
UL-guaranteed bitrate	Conditional (NOTE 3)	Yes
DL-guaranteed bitrate	Conditional (NOTE 3)	Yes
ARP	Conditional (NOTE 3)	Yes
NOTE 1: The Rule-Identifier uniquely defines an active QoS rule for a certain BBERF within the scope of a UE. NOTE 2: The QoS class identifier is scalar and accommodates the need for differentiating QoS in all types of IP-CAN. The value range is expandable to accommodate operator specific policies. NOTE 3: If present in the corresponding PCC rule.		

6.5.2 Quality of Service control rule operations

QoS control rule operations consist of activation, modification and de-activation of QoS rules.

Activation of a dynamic QoS rule provides the QoS rule information to the BBERF via the Gxx reference point.

An active QoS rule means that:

IPR2024-01041 / IPR2024-01042
Petitioners' Exhibit 1010
Page 000052

- the service data flow template shall be used for service data flow detection;
- the service data flow template shall be used for mapping of downlink packets to the IP-CAN bearer determined by the bearer binding;
- the service data flow template shall be used for service data flow detection of uplink packets on the IP-CAN bearer determined by the bearer binding;
- QoS procedures associated with the QoS rule, if any, shall be invoked.

The PCRF may, at any time, modify an active QoS rule.

The PCRF may, at any time, deactivate an active QoS rule in the BBERF via the Gxx reference point. At IP-CAN bearer termination all active QoS rules on that bearer are deactivated without explicit instructions from the PCRF to do so.

7 PCC Procedures and flows

7.1 Introduction

The specification of the PCC procedures and flows is valid for the general scenario. Access specific information is included in Annex A and Annex D.

The description includes procedures for IP-CAN Session Establishment, Modification and Termination. The IP-CAN Session modification comprises IP-CAN bearer establishment, modification, termination, as well as unsolicited PCC decisions.

There are three distinct network scenarios for an IP-CAN Session:

Case 1: No Gateway Control Session is required, no Gateway Control Establishment occurs at all (e.g. 3GPP Access where GTP-based S5/S8 are employed, as described in TS 23.401 [17] and the IP-CAN specific Annexes).

Case 2: A Gateway Control Session is required. The BBERF establishes a Gateway Control Session prior to any IP-CAN session establishment. There are two sub-cases:

2a) The UE acquires a care of address (CoA) that is used for the S2c reference point. The same Gateway Control session applies for all IP-CAN sessions using that CoA.

2b) A Gateway Control Session is required, as described in TS 23.402 [18] and the IP-CAN specific Annexes, Gateway Control Session Establishment, as defined in clause 7.7.1.
Each IP-CAN session is handled in a separate Gateway Control Session.

The PCRF determines at Gx and Gxx session establishment what case applies initially as follows:

1. If the BBERF, at establishment of the Gateway Controls Session, provides an APN, then case 2b applies for the IP-CAN session.
2. If the BBERF, at establishment of the Gateway Controls Session, does not provide any APN, then case 2a applies for the UE. For this case, the PCRF expects tunnelling header information for each IP-CAN session to be provided by the applicable PCEF.
3. If there is no Gateway Control Session for the UE with the same IP-CAN type as indicated over Gx, case 1 applies.

In a handover procedure the applicable case may change for an IP-CAN session. The PCRF determines the new case in the same manner as described above. Details are defined in each such procedure.

The procedures cover non-roaming, roaming with home routed access and roaming with access to a visited PDN.

For the non-roaming case, the H-PCRF plays the full role of PCRF. The V-PCRF is not applicable in this case.

IPR2024-01041 / IPR2024-01042
Petitioners' Exhibit 1010
Page 000053

For the roaming case with home routed access, the H-PCRF interacts with the PCEF and, if the Gxx applies, the V-PCRF interacts with the BBERF.

For the roaming case with visited access (a.k.a. local breakout in TS 23.401 [17] and TS 23.402 [18]), the V-PCRF interacts with the PCEF and, if Gxx applies, the BBERF.

Procedures defined in clause 7 cover all the traffic cases where roaming partners both operate PCC.

Editor's Note: It is FFS if the procedures defined in clause 7 also cover the case of visited operator only using PCC. In this case, the V-PCRF acts as for the visited access case, but without any interaction with the H-PCRF. As a consequence, the SPR is not accessible.

In the text describing the steps in each sequence diagram, the designation PCRF, without specifying V- or H-, refers to the PCRF in non-roaming case and refers to either the V-PCRF or the H-PCRF in the roaming cases. The interpretation of the text "PCRF" is thus dependent on the network scenario.

IPR2024-01041 / IPR2024-01042
Petitioners' Exhibit 1010
Page 000054

7.2 IP-CAN Session Establishment

This clause describes the signalling flow for IP-CAN Session establishment and IP address assignment to the UE. The AF is not involved.

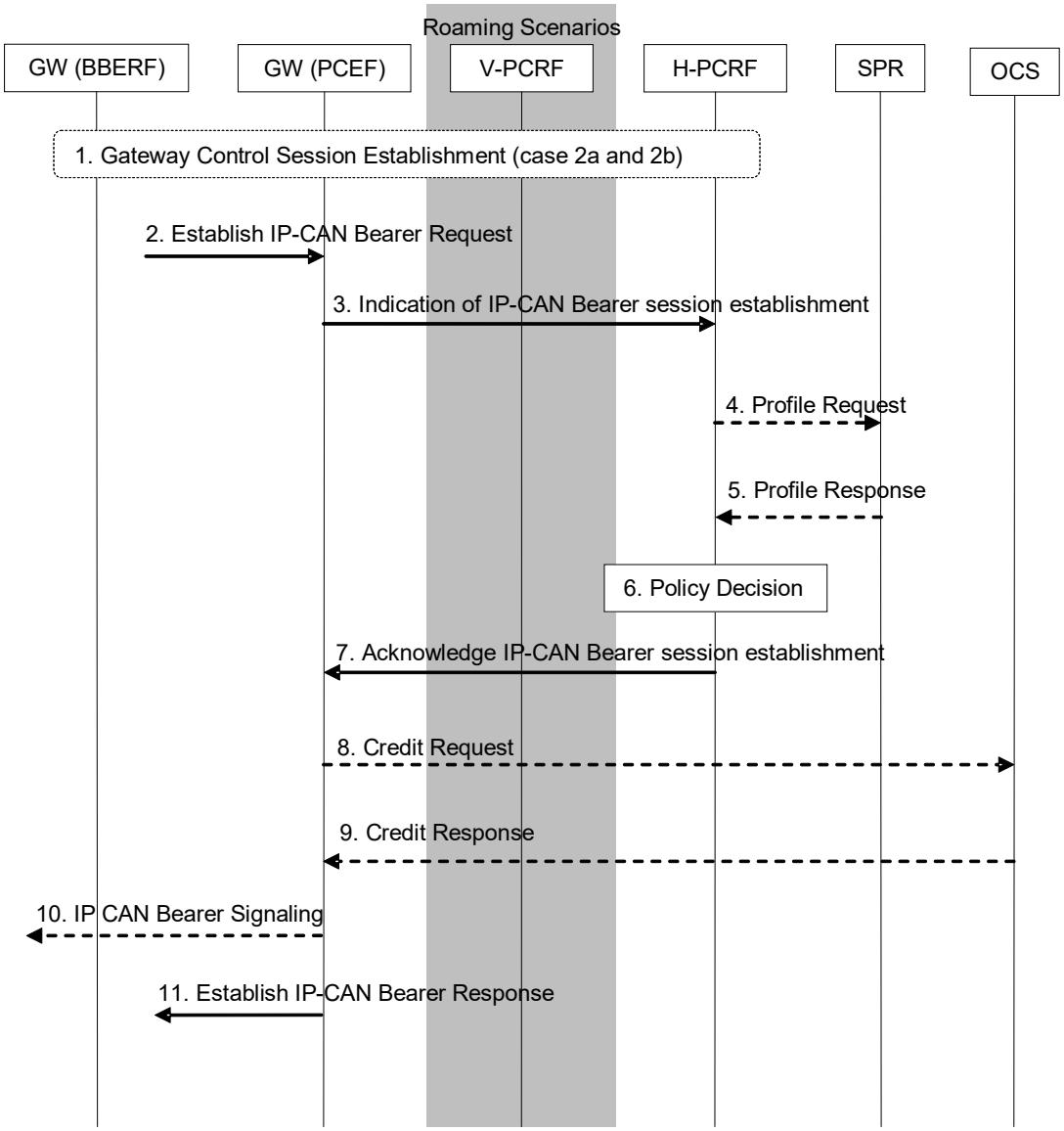

Figure 7.2-1: IP-CAN Session Establishment

This procedure concerns both roaming and non-roaming scenarios. In the roaming case when a Gateway Control Session is used, the V-PCRF should proxy the Gateway Control Session Establishment information between the BBERF in the VPLMN and the H-PCRF over S9 based on PDN-Id and roaming agreements.

For the Local Breakout scenario (Figure 5.1.3) the V-PCRF shall proxy the Indication and Acknowledge of IP-CAN Session Establishment over S9 between the PCEF in the VPLMN and the H-PCRF

In the non-roaming case (Figure 5.1.1) the V-PCRF is not involved.

1. The BBERF initiates a Gateway Control Session Establishment procedure as defined in clause 7.7.1 (applicable for cases 2a during initial attach and 2b, as defined in clause 7.1).

2. The GW(PCEF) receives a request for IP-CAN Bearer establishment. The GW(PCEF) accepts the request and assigns an IP address for the user.

IPR2024-01041 / IPR2024-01042
Petitioners' Exhibit 1010
Page 000055

3. The PCEF determines that the PCC authorization is required, requests the authorization of allowed service(s) and PCC Rules information. The PCEF includes the following information: UE Identity (e.g. MN NAI), a PDN identifier (e.g. APN), the IP-CAN type and the IP address(es) and, if available, the default charging method and the IP-CAN bearer establishment modes supported. The PDN identifier, IP address(es) and UE identity enables identification of the IP-CAN session. The IP-CAN Type identifies the type of access from which the IP-CAN session is established. If the service data flow is tunnelled at the BBERF, the PCEF shall provide information about the mobility protocol tunnelling encapsulation header. The PCEF may also include the Default Bearer QoS and APN-AMBR (applicable for case 1, as defined in clause 7.1).

4. If the PCRF does not have the subscriber's subscription related information, it sends a request to the SPR in order to receive the information related to the IP-CAN session. The PCRF provides the subscriber ID and, if applicable, the PDN identifier to the SPR. The PCRF may request notifications from the SPR on changes in the subscription information.

5. The PCRF stores the subscription related information containing the information about the allowed service(s) and PCC Rules information.

6. The PCRF makes the authorization and policy decision.

7. The PCRF sends the decision(s) , including the chosen IP-CAN bearer establishment mode, to the PCEF. The GW(PCEF) enforces the decision. The PCRF may provide the default charging method and may include the following information: the PCC Rules to activate and the Event Triggers to report. The Policy and Charging Rules allow the enforcement of policy associated with the IP-CAN session. The Event Triggers indicate to the PCEF what events must be reported to the PCRF.

8. If online charging is applicable, and at least one PCC rule was activated, the PCEF shall activate the online charging session, and provide relevant input information for the OCS decision. Depending on operator configuration PCEF may request credit from OCS for each charging key of the activated PCC rules.

9. If online charging is applicable the OCS provides the possible credit information to the PCEF and may provide re-authorisation triggers for each of the credits.

10. If network control applies the GW may initiate the establishment of additional IP-CAN bearers. See Annex A and Annex D for details.

    Step 10, which establishes dedicated bearers, does not apply when step 12 is performed.

11. If at least one PCC rule was successfully activated and if online charging is applicable credit was not denied by the OCS, the GW(PCEF) acknowledges the IP-CAN Bearer Establishment Request.

IPR2024-01041 / IPR2024-01042
Petitioners' Exhibit 1010
Page 000056

7.3 IP-CAN Session Termination

7.3.1 UE initiated IP-CAN Session termination

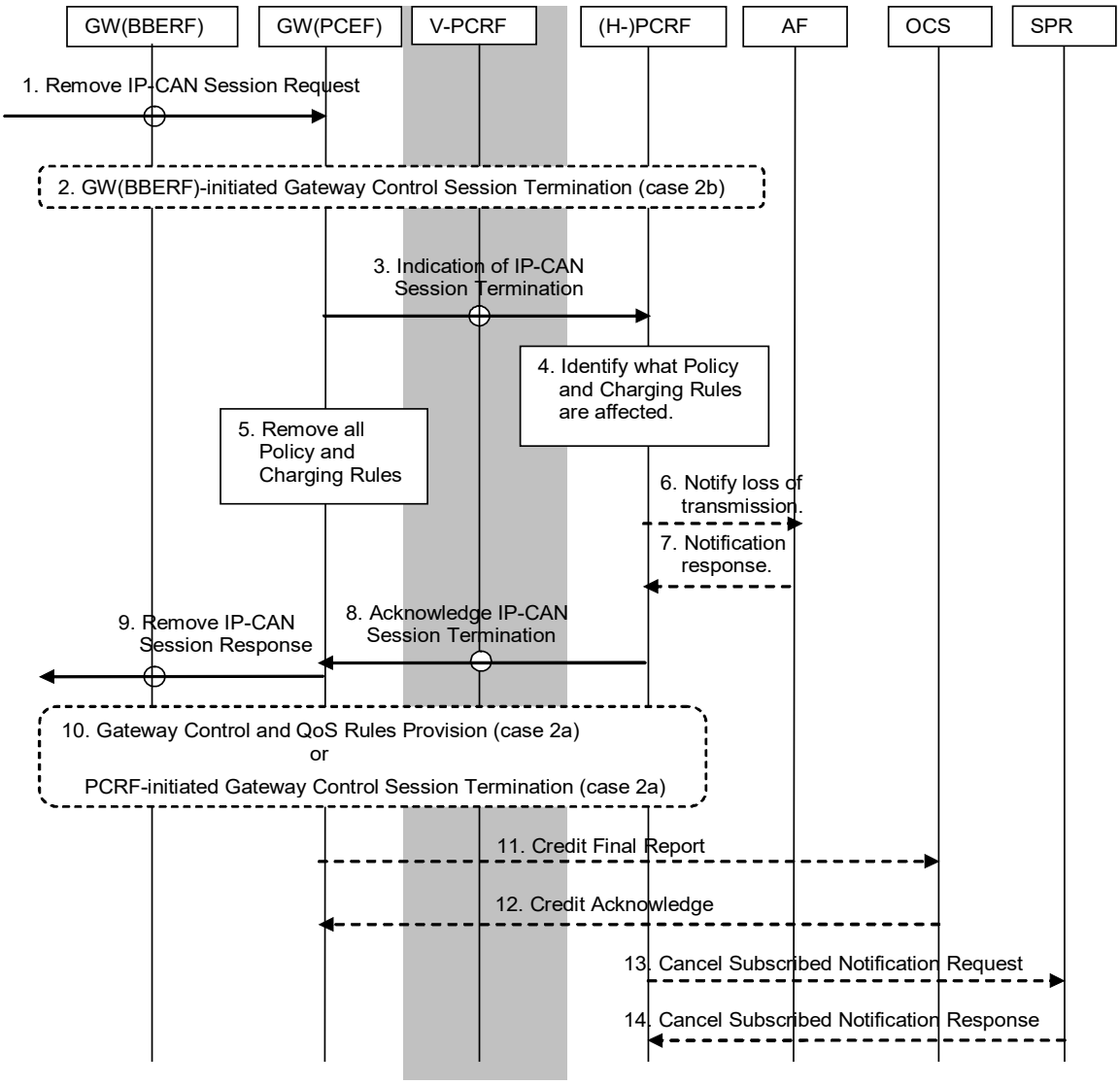

Figure 7.3.1: IP-CAN Session Termination

This procedure concerns both roaming and non-roaming scenarios. In the roaming case when home routed access is used (figure 5.1.2) or if case 2a applies (as defined in clause 7.1) for Local Breakout (figure 5.1.3), the V-PCRF should proxy the GW(BBERF) initiated Gateway Control Session Termination or the Gateway Control and QoS Rules Provision between the BBERF in the VPLMN and the H-PCRF. For those cases it is also the H-PCRF that initiates the PCRF initiated Gateway Control Session Termination procedure or the Gateway Control and QoS Rules Provision procedure and proxy the information over S9 to the BBERF through the V-PCRF.

For the Local breakout scenario (figure 5.1.3) the V-PCRF shall proxy Indication and Acknowledge of IP-CAN Session Termination over S9 between the PCEF in the VPLMN and the H-PCRF. If the AF resides in the VPLMN, the V-PCRF shall proxy AF session signalling over S9 between the AF and the H-PCRF.

NOTE 1: The case when the AF resides in the VPLMN is not showed in the figure.

For the same scenario if either case 1 or case 2b applies (as defined in clause 7.1), the V-PCRF may respond to/initiate the Gateway Control Session procedures locally without notifying the H-PCRF.

IPR2024-01041 / IPR2024-01042
Petitioners' Exhibit 1010
Page 000057

In the non-roaming case (figure 5.1.1) the V-PCRF is not involved at all.

1. If case 2b applies, the GW(BBERF) receives a request to remove the IP-CAN session. In case 2a, the request goes transparently through the GW(BBERF). In all cases, the GW(PCEF) receives a request to remove the IP-CAN session.

2. If case 2b applies, the GW(BBERF)-initiated GW Control Session Termination procedure as defined in clause 7.7.2.1 is initiated.

3. The GW(PCEF) indicates that the IP-CAN Session is being removed and provides relevant information to the PCRF.

NOTE 2: The GW(PCEF) may proceed to step 9 in parallel with the indication of IP-CAN Session termination.

4. The PCRF finds the PCC Rules that require an AF to be notified and removes PCC Rules for the IP-CAN session.

5. The GW(PCEF) removes all PCC Rules associated with the IP-CAN session.

6. The PCRF notifies the AF that there are no transmission resources for the service if this is requested by the AF.

7. The AF acknowledges the notification of the loss of transmission resources.

8. The PCRF removes the information related to the terminated IP-CAN Session (subscription information etc.), and acknowledges to the GW(PCEF) that the PCRF handling of the IP-CAN session has terminated. This interaction is the response to the GW(PCEF) request in step 3.

9. The GW(PCEF) continues the IP-CAN Session removal procedure.

10. If case 2a applies, the GW Control and QoS Rules Provision procedure as defined in clause 7.7.4 may be initiated to remove the QoS rules associated with the IP-CAN session being terminated. This applies e.g. in case the Gateway Control Session shall remain to serve other IP-CAN sessions.

    Alternatively, if case 2a applies and the PCRF determines that all QoS rules are to be removed and the Gateway Control Session shall be terminated, the PCRF-initiated GW Control Session Termination procedure as defined in clause 7.7.2.2 is initiated. This applies e.g. in case the UE is detached and the CoA acquired by the UE is not used for any other IP-CAN session.

11. If online charging is applicable, the PCEF issues final reports and returns the remaining credit to the OCS.

NOTE 3: Step 11 may be initiated any time after step 8.

12. If online charging is applicable the OCS acknowledges that credit report and terminates the online charging session.

13. The PCRF sends a cancellation notification request to the SPR if it has subscribed such notification.

NOTE 4: Step 13 may be initiated any time after step 8.

14. The SPR sends a response to the PCRF.

NOTE 5: The IP-CAN Session removal procedure may proceed in parallel with the indication of IP-CAN Session termination.

IPR2024-01041 / IPR2024-01042
Petitioners' Exhibit 1010
Page 000058

7.3.2 GW(PCEF) initiated IP-CAN Session termination

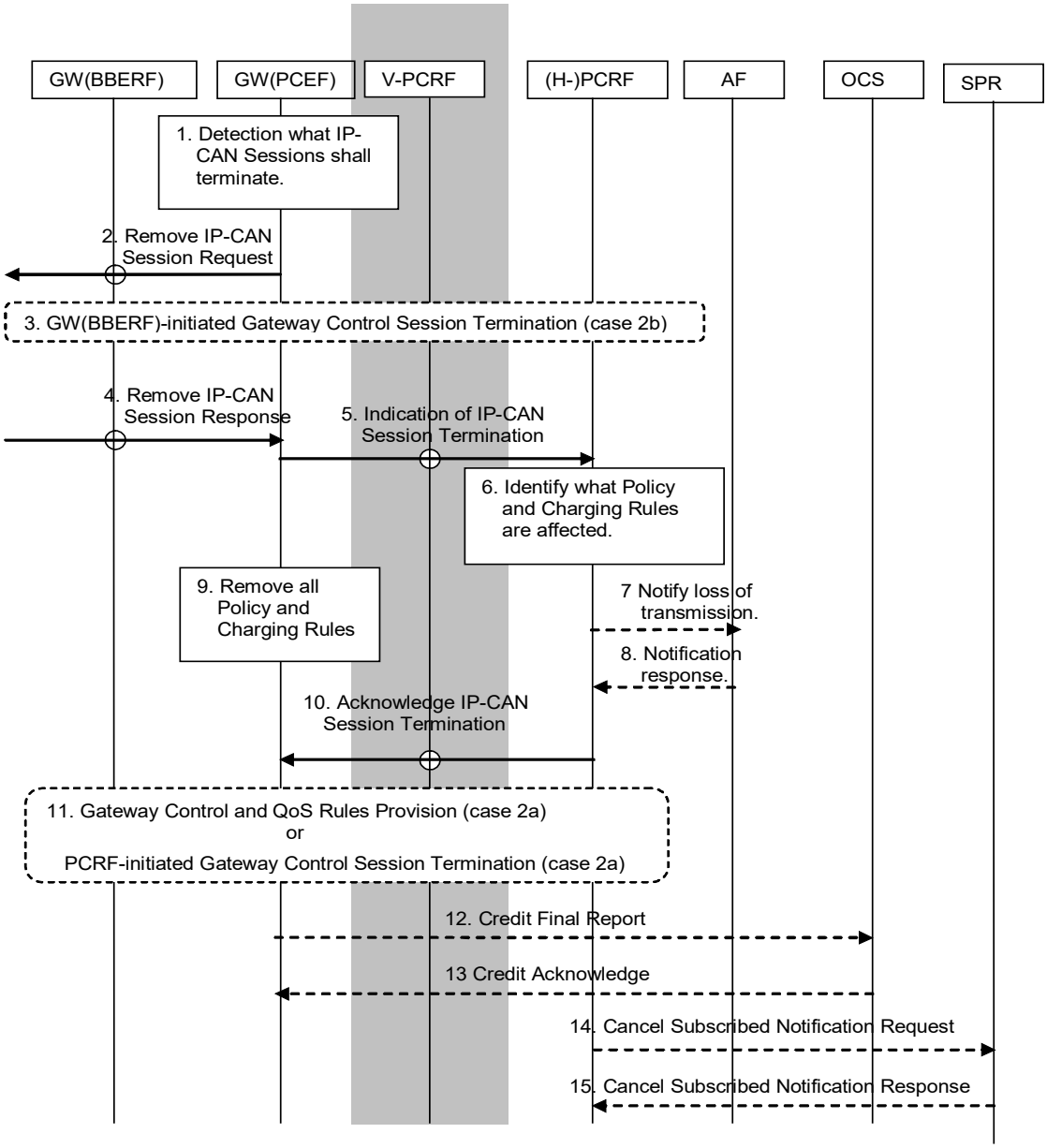

Figure 7.3.2: GW(PCEF) Initiated IP-CAN Session Termination

This procedure concerns both roaming and non-roaming scenarios. In the roaming case when home routed access is used (figure 5.1.2) or if case 2a applies (as defined in clause 7.1) for Local Breakout (figure 5.1.3), the V-PCRF should proxy the GW(BBERF) initiated Gateway Control Session Termination or the Gateway Control and QoS Rules Provision between the BBERF in the VPLMN and the H-PCRF. For those cases it is also the H-PCRF that initiates the PCRF initiated Gateway Control Session Termination procedure or the Gateway Control and QoS Rules Provision procedure and proxy the information over S9 to the BBERF through the V-PCRF.

For the Local breakout scenario (figure 5.1.3) the V-PCRF shall proxy Indication and Acknowledge of IP-CAN Session Termination over S9 between the PCEF in the VPLMN and the H-PCRF. If the AF relies in the VPLMN, the V-PCRF shall proxy AF session signalling over S9 between the AF and the H-PCRF.

NOTE 1: The case when the AF resides in the VPLMN is not showed in the figure.

For the same scenario if either case 1 or case 2b applies (as defined in clause 7.1), the V-PCRF may respond to/initiate the Gateway Control Session procedures locally without notifying the H-PCRF.

IPR2024-01041 / IPR2024-01042
Petitioners' Exhibit 1010
Page 000059

In the non-roaming case (figure 5.1.1) the V-PCRF is not involved at all.

1. The GW(PCEF) detects that IP-CAN Session termination is required.
2. The GW(PCEF) sends a request to remove the IP-CAN session.
3. If case 2b applies, the GW(BBERF)-initiated GW Control Session Termination procedure as defined in clause 7.7.2.1 is initiated.
4. The GW(PCEF) receives the response for the IP-CAN session removal.
5. The GW(PCEF) indicates the IP-CAN Session termination and provides the relevant information to the PCRF.
6. The PCRF finds the PCC Rules that require an AF to be notified.
7. The PCRF notifies the AF that there are no transmission resources for the service if this is requested by the AF.
8. The AF acknowledges the notification on the loss of transmission resources.
9. The GW(PCEF) removes all the PCC Rules associated with the IP-CAN session.
10. The PCRF removes the information related to the terminated IP-CAN Session (subscription information etc.), and acknowledges the IP-CAN Session termination.
11. If case 2a applies, the GW Control and QoS Rules Provision procedure as defined in clause 7.7.4 may be initiated to remove the QoS rules associated with the IP-CAN session being terminated. This applies e.g. in case the Gateway Control Session shall remain to serve other IP-CAN sessions.

    Alternatively, if case 2a applies and the PCRF determines that the Gateway Control session shall be terminated, the PCRF-initiated GW Control Session Termination procedure as defined in clause 7.7.2.2 is initiated. This applies e.g. in case the UE is detached and the CoA acquired by the UE is not used for any other IP-CAN session.
12. If online charging is applicable, the GW issues final reports and returns the remaining credit to the OCS.

NOTE 2: Step 12 may be initiated any time after step 10.

13. If online charging is applicable the OCS acknowledges the credit report and terminates the online charging session.
14. The PCRF sends a cancellation notification request to the SPR if it has subscribed such notification.

NOTE 3: Step 14 may be initiated any time after step 8.

15. The SPR sends a response to the PCRF.

7.4 IP-CAN Session Modification

7.4.1 IP-CAN Session Modification; GW(PCEF) initiated

This sub-clause describes the signalling flow for the IP-CAN Session modification initiated by the GW(PCEF). These modifications include IP-CAN bearer establishment and termination as well as modification if the triggering conditions given to the PCEF are fulfilled.

The AF may be involved. An example of the scenario is authorization of a session-based service for which an IP-CAN Session is also modified.

IPR2024-01041 / IPR2024-01042
Petitioners' Exhibit 1010
Page 000060

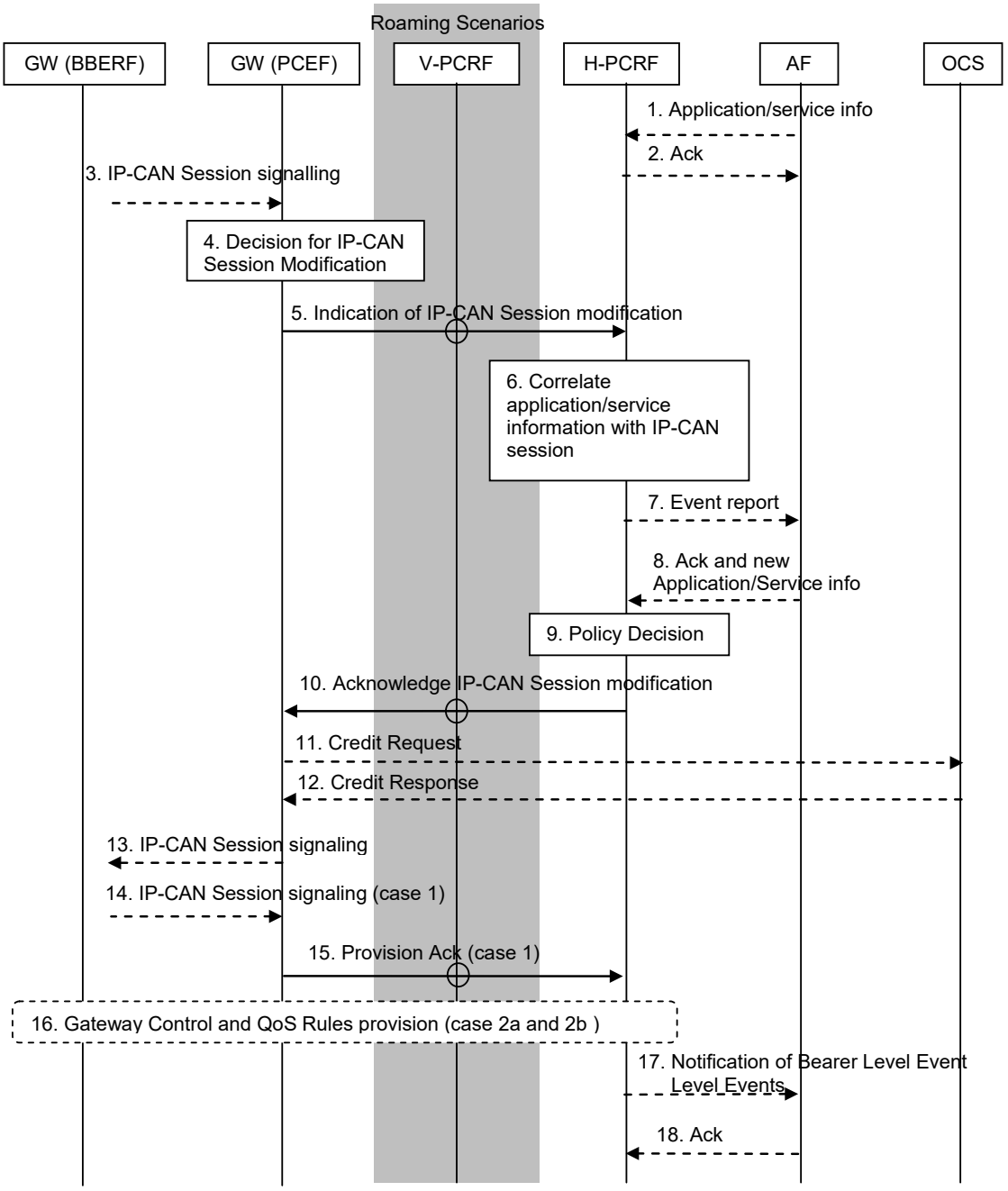

Figure 7.4: IP-CAN Session Modification; GW(PCEF) initiated

This procedure concerns both roaming and non-roaming scenarios. In the roaming case when home routed access applies (figure 5.1.2) or if case 2a applies (as defined in clause 7.1) for Local Breakout (figure 5.1.3), when a Gateway Control Session is used, the H-PCRF may initiate a Gateway Control and QoS Rules Provisioning procedure towards the BBERF and proxy the information through the V-PCRF over S9.

For case 2b in the Local Breakout scenario (figure 5.1.3) and if the Gateway Control Session is terminated locally at the V-PCRF, the V-PCRF shall initiate the Gateway Control and QoS Rules Provisioning procedure locally without notifying the H-PCRF. For this case the V-PCRF shall proxy the Indication and Acknowledge of IP-CAN Session Modification over S9 between the PCEF in the VPLMN and the H-PCRF. If the AF is located in the VPLMN for this scenario, the V-PCRF shall proxy AF session signalling over S9 between the AF and the H-PCRF.

NOTE 1: The case when the AF resides in the VPLMN is not shown in the figure.

In the non-roaming case (figure 5.1.1) the V-PCRF is not involved at all.

IPR2024-01041 / IPR2024-01042
Petitioners' Exhibit 1010
Page 000061

1. Optionally, the AF provides/revokes service information to the PCRF due to AF session signalling. The AF may subscribe at this point to notification of bearer level events related to the service information.

NOTE 2: For the PCRF to generate the applicable events, the PCRF instructs the PCEF to report events related to the corresponding PCC rules. Such events are not shown in this sequence diagram.

2. The PCRF stores the service information and responds with the Acknowledgement to the AF.

3. The GW(PCEF) may receive IP-CAN session signalling for IP-CAN Session modification.

4. The GW(PCEF) makes a decision to trigger IP-CAN Session modification either caused by the previous step or based on an internal decision.

5. The GW(PCEF) determines that the PCC interaction is required and sends an Indication of IP-CAN Session modification (Event Report, affected PCC Rules) to the PCRF and, if changed, the new IP-CAN bearer establishment modes supported. If there is a limitation or termination of the transmission resources for a PCC Rule, the GW(PCEF) reports this to the PCRF.

6. The PCRF correlates the request for PCC Rules with the IP-CAN session and service information available at the GW(PCEF).

7. The PCRF may need to report to the AF an event related to the transmission resources if the AF requested it at initial authorisation.

8. The AF acknowledges the event report and/or responds with the requested information.

9. The PCRF makes the authorization and policy decision.

10. The PCRF sends an Acknowledge of IP-CAN Session modification (PCC Rules, Event Triggers and, if changed, the chosen IP-CAN bearer establishment mode) to the GW(PCEF). The GW(PCEF) enforces the decision.

11. If online charging is applicable, the GW(PCEF) may request credit for new charging keys from and/or shall issue final reports and return remaining credit for charging keys no longer active to the OCS.

12. If OCS was contacted, the OCS provides the credit information to the GW(PCEF), and/or acknowledges the credit report.

13 The GW(PCEF) acknowledges or rejects any IP-CAN Session signalling received in step 3.

    An IP-CAN bearer establishment or modification is accepted if at least one PCC rule is active for the IP-CAN bearer and in case of online charging credit was not denied by the OCS. Otherwise, the IP-CAN bearer establishment or modification is rejected.

    An IP-CAN bearer termination is always acknowledged by the GW(PCEF).

    An IP-CAN bearer modification not upgrading the QoS and not providing traffic mapping information is always acknowledged by the GW(PCEF).

    In case of a GW(PCEF) internal decision the GW(PCEF) initiates any additional IP-CAN Session signalling required for completion of the IP-CAN Session modification (applicable for case 1).

    In case the IP-CAN session modification is due to the BBF transitioning from a BBERF in the source access-network to the PCEF, the PCEF initiates IP-CAN bearer signalling to activate bearers in the target access network (applicable for case 1).

14. The GW(PCEF) receives the response for the IP-CAN Session signalling request (applicable for case 1).

15. The GW(PCEF) sends a Provision Ack (accept or reject of the PCC rule operation(s)) to inform the PCRF about the outcome of the GW(PCEF) actions related to the decision(s) received in step 10 (applicable for case 1).

16. The PCRF initiates a Gateway Control and QoS Rules provision procedure as defined in clause 7.7.4, if required to keep the PCC and QoS rules aligned (applicable for case 2a and 2b, as defined in clause 7.1).

    If there are multiple BBERFs associated with the IP-CAN session, Step 15 is performed with all the BBERFs.

17. If the AF requested it, the PCRF notifies the AF of related bearer level events (e.g. transmission resources are established/released/lost).

IPR2024-01041 / IPR2024-01042
Petitioners' Exhibit 1010
Page 000062

NOTE 3: Based on the outcome reported in this step the AF performs the appropriate action, e.g. starting charging or terminating the AF session.

18. The AF acknowledges the notification from the PCRF.

7.4.2 IP-CAN Session Modification; PCRF initiated

This clause describes the signalling flow for the IP-CAN Session modification initiated by the PCRF. The AF may be involved. An example of the scenario is initiation and authorization of a session-based service for which an IP-CAN Session is modified. IP-CAN Session handling and handling of PCC rules for non-session based services, and also general handling of PCC rules that are not subject to AF-interaction is also applicable here.

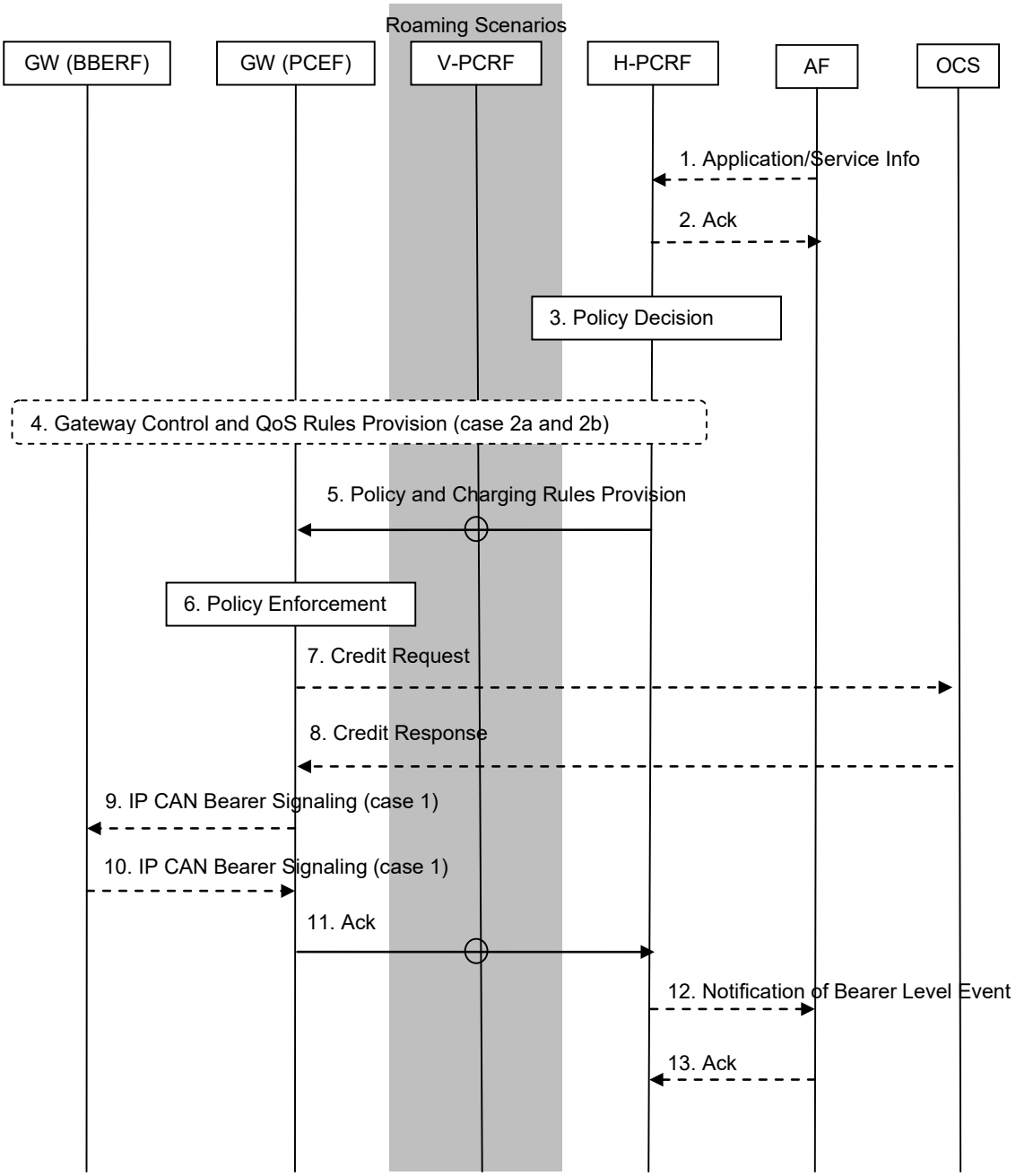

Figure 7.5: IP-CAN Session Modification; PCRF initiated

This procedure concerns both roaming and non-roaming scenarios. In the roaming case when home routed access applies (figure 5.1.2) or if case 2a applies (as defined in clause 7.1) for Local Breakout (figure 5.1.3), when a Gateway Control Session is used, the V-PCRF shall proxy Gateway Control and QoS Rules Request between the BBERF in the

IPR2024-01041 / IPR2024-01042
Petitioners' Exhibit 1010
Page 000063

VPLMN and the H-PCRF over S9. For this case the H-PCRF may also initiate a Gateway Control and QoS Rules Provisioning procedure towards the BBERF in the VPLMN and proxy the information via the V-PCRF over S9.

For case 2b in the Local Breakout scenario (figure 5.1.3) and if the Gateway Control Session is terminated locally at the V-PCRF, the V-PCRF shall reply to/initiate Gateway Control Session and QoS Rules Request/Provisioning procedures locally without notifying the H-PCRF. For this case the V-PCRF shall proxy the Policy and Charging Rules Provisioning and Acknowledge over S9 between the PCEF in the VPLMN and the H-PCRF. If the AF is located in the VPLMN for this scenario, the V-PCRF shall proxy AF session signalling over S9 between the AF and the H-PCRF.

NOTE 1: The case when the AF resides in the VPLMN is not showed in the figure.

In the non-roaming case (figure 5.1.1) the V-PCRF is not involved at all.

1. Optionally, the AF provides/revokes service information to the PCRF due to AF session signalling. The AF may subscribe at this point to notification of bearer level events related to the service information.

NOTE 2: For the PCRF to generate the applicable events, the PCRF instructs the PCEF to report events related to the corresponding PCC rules. Such events are not shown in this sequence diagram.

2. The PCRF stores the service information if available and responds with the Acknowledgement to the AF.

NOTE 3: Without AF interaction, a trigger event in the PCRF may cause the PCRF to determine that the PCC rules require updating at the PCEF, e.g. change to configured policy.

NOTE 4: This procedure could also be triggered by the Gateway Control and QoS Rules Request procedure as described in clause 7.7.3.

3. The PCRF makes the authorization and policy decision.

4. If there is no Gateway Control and QoS Rules Reply pending and there is a need to provision QoS rules, the PCRF initiates a Gateway Control and QoS Rules Provision Procedure as defined in 7.7.4 (applicable for cases 2a and 2b, as defined in clause 7.1).

   If there are multiple BBERFs associated with the IP-CAN session, Step 4 is performed with the BBERFs that support UE/NW bearer establishment mode.

NOTE 5: If there is a Gateway Control and QoS Rules Reply pending, e.g. this procedure was invoked from the Gateway Control and QoS Rules Request procedure as defined in clause 7.7.3, the PCRF shall use that opportunity for provisioning the applicable QoS rules. If there are multiple BBERFs associated with the IP-CAN session, and the procedure was invoked by a Gateway Control and QoS Rules Request procedure from the primary BBERF, the PCRF may receive a Gateway Control and QoS Rules Request from the non-primary BBERFs.

5. The PCRF sends the Policy and Charging Rules Provision (PCC Rules, Event Trigger, Event Report) to the PCEF.

6. The PCEF enforces the decision.

7. If online charging is applicable, the PCEF may request credit for new charging keys from and/or shall return the remaining credit for charging keys no longer active to the OCS.

8. If OCS was involved, the OCS provides the credit information to the PCEF, and/or acknowledges the credit report

9. The GW(PCEF) may send an IP-CAN Bearer establishment, modification or termination request (applicable for case 1, as defined in clause 7.1).

   An IP-CAN bearer modification is sent by the GW(PCEF) if the QoS of the IP-CAN bearer exceeds the authorized QoS provided by the PCRF in step 3.

   An IP-CAN bearer termination request is sent by the GW(PCEF) if all PCC rules for an IP-CAN bearer have been removed.

10. The GW(PCEF) receives the response for the IP-CAN Bearer modification or termination request (applicable for case 1).

IPR2024-01041 / IPR2024-01042
Petitioners' Exhibit 1010
Page 000064

11. The PCEF sends Acknowledge Policy and Charging Rules Provisioning (accept or reject of the PCC rule operation(s)) to the PCRF.

12. If the AF requested it, the PCRF notifies the AF related bearer level events (e.g. transmission resources are established/released/lost).

13. The AF acknowledges the notification from the PCRF.

7.4.3 Void

7.5 Update of the subscription information in the PCRF

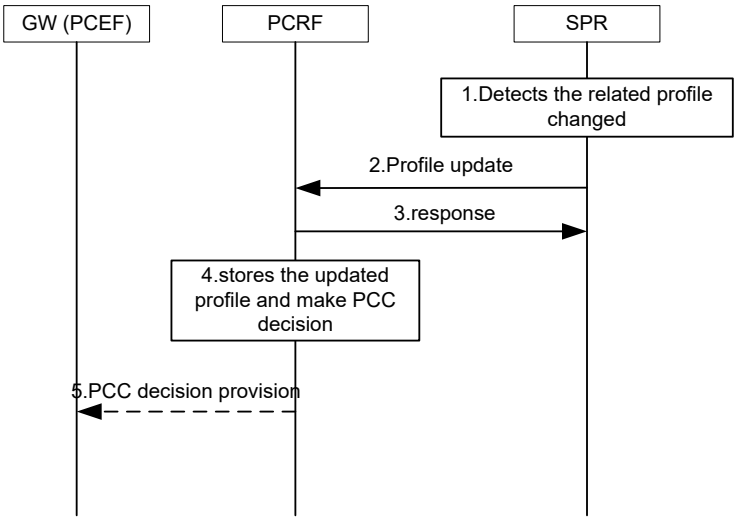

Figure-7.6: Procedure for update of the subscription information in the PCRF

1. The SPR detects that the related subscription profile of an IP-CAN session has been changed.

2. If requested by the PCRF, the SPR notifies the PCRF on the changed profile.

3. The PCRF responds to the SPR.

4. The PCRF stores the updated profile and makes resulting PCC decisions.

5. The PCRF provides all new PCC decisions to the PCEF, using the PCRF initiated IP-CAN session modification procedure in clause 7.4.2.

7.6 PCRF Discovery and Selection

7.6.1 General principles

This clause describes the underlying principles for PCRF selection and discovery:

- A single logical PCRF entity may be deployed by means of multiple and separately addressable PCRFs.

- The H-PCRF must be able to correlate the AF service session information received over Rx with the right IP-CAN session (PCC Session binding).

- The PCRF must be able to associate sessions established over the different reference points (Gx, S9, Gxa/Gxc), for the same UE's IP-CAN session. The actual reference points that need to be correlated depend on the scenario (e.g. roaming, LBO etc.).

IPR2024-01041 / IPR2024-01042
Petitioners' Exhibit 1010
Page 000065

- It shall be possible to deploy a network so that a PCRF may serve only specific PDN(s). For example, PCC may be enabled on a per APN basis.

  For the case 2a (as defined in clause 7.1), the same PCRF shall support all the PDNs for which PCC is enabled and for which there are potential users accessing by means of case 2a (as defined in clause 7.1).

  It shall also be possible to deploy a network so that the same PCRF can be allocated for all PDN connections for a UE.

- A standardized procedure for contacting the PCRF is preferred to ensure interoperability between PCRFs from different vendors. The procedure may be specific for each reference point. The procedure shall enable the PCRF(s) to coordinate Gx, Rx and, when applicable, Gxa/Gxc interactions, as well as S9, when applicable.

- It shall allow that entities contacting the PCRF may be able to provide different sets of information about the UE and PDN connections. For example:

  - The AF has information about UE IP address and PDN but may not have user identity information

  - The PDN GW has information about user identity (UE NAI), the APN and the UE IP address(es) for a certain PDN connection.

  - For case 2b as defined in clause 7.1, the S-GW and trusted non-3GPP access has information about the user identity (UE NAI) and, the APN(s) but may not know the UE IP address(es).

  - For case 2a as defined in clause 7.1, the trusted non-3GPP access has information about the user identity (UE NAI) and the local IP address (CoA) but may not know the APN or UE IP address(es) (HoA).

- The DRA has information about the user identity (UE NAI), the APN, the UE IP address(es) and the selected PCRF address for a certain IP-CAN Session.

  When the DRA first receives a request for a certain IP-CAN Session (e.g. from the PDN GW), the DRA selects a suitable PCRF for the IP-CAN Session and stores the PCRF address. Subsequently, the DRA can retrieve the selected PCRF address according to the information carried by the incoming requests from other entities (e.g. the AF or the BBERF).

  When the IP-CAN Session terminates, the DRA shall remove the information about the IP-CAN Session. In case of the PCRF realm change, the information about the IP-CAN session stored in the old DRA shall be removed.

- All PCRFs in a PLMN belong to one or more Diameter realms. Routing of PCC messages for a UE towards the right Diameter realm in a PLMN is based on standard Diameter routing, as specified in RFC 3588, i.e. based on UE-NAI domain part. A Diameter realm shall provide the ability of routing PCC messages for the same UE and PDN connection to the same PCRF based on the available information supplied by the entities contacting the PCRF.

  A PLMN may be separated into multiple Diameter realms based on the PDN ID information or IP address range. In this case, the relevant information (PDN ID, IP address, etc) shall be used to assist routing PCC message to the appropriate Diameter realm.

- Unique identification of an IP-CAN session in the PCRF shall be possible based on the (UE ID, PDN ID)-tuple , the (UE IP Address(es), PDN ID)-tuple and the (UE ID, UE IP Address(es), PDN ID).

NOTE: Multiple PDN connections to the same APN are not supported for the case 2b in clause 7.1 in this release of the specification.

- Standard IETF RFC 3588 mechanisms and components, e.g. Diameter agents, should be applied to deploy a network where the PCRF implementation specifics are invisible for Diameter clients. The use of Diameter agents, including Diameter redirect agents, shall be permitted, but the use of agents in a certain deployment shall be optional.

7.6.2 Solution Principles

Editor's note: The content of this clause represents the working assumptions made by SA2. Protocol aspects shall be handled by stage 3 work. It is FFS whether the content of this clause, or parts of the content, belongs in this specification or should be covered by stage 3 specifications.

IPR2024-01041 / IPR2024-01042
Petitioners' Exhibit 1010
Page 000066

In order to ensure that all Diameter sessions for Gx, S9, Gxa/Gxc and Rx for a certain IP-CAN session reach the same PCRF when multiple and separately addressable PCRFs have been deployed in a Diameter realm, an optional logical "Diameter Routing Agent (DRA)" function is enabled. This resolution mechanism is not required in networks that utilise a single PCRF per Diameter realm. The DRA has the following roles:

- When deployed, DRA needs to be contacted at first interaction point for a given GW and IP-CAN session.

Editor's note: It is FFS whether DRA involvement in, subsequent interactions is needed.

- When deployed, the DRA is on the Diameter routing path when initiating a session with a PCRF over Gx, Rx, Gxa/Gxc, and S9.
- The DRA is involved at IP-CAN session establishment by the PDN GW
- The DRA selects the PCRF at initial attach (IP-CAN session or Gateway Control session establishment)
- The DRA is involved at Gateway Control session establishment by the S-GW and trusted non-3GPP access
- After IP-CAN session or Gateway Control Session establishment, the DRA ensures that the same PCRF is contacted for Rx, Gxa/Gxc, Gx and S9.
- The DRA keeps status of assigned PCRF for a certain UE and IP-CAN session.

Editor's note: It is FFS how the status information is released when related sessions are terminated.

- It is assumed that there is a single logical DRA serving a Diameter realm.
- In roaming scenarios, there is only a single VPCRF for all the PCC sessions (IP-CAN session, GW control sessions, AF session, etc.) belonging to a single PDN connection of the UE. The VPCRF shall be selected by a DRA in the visited PLMN.

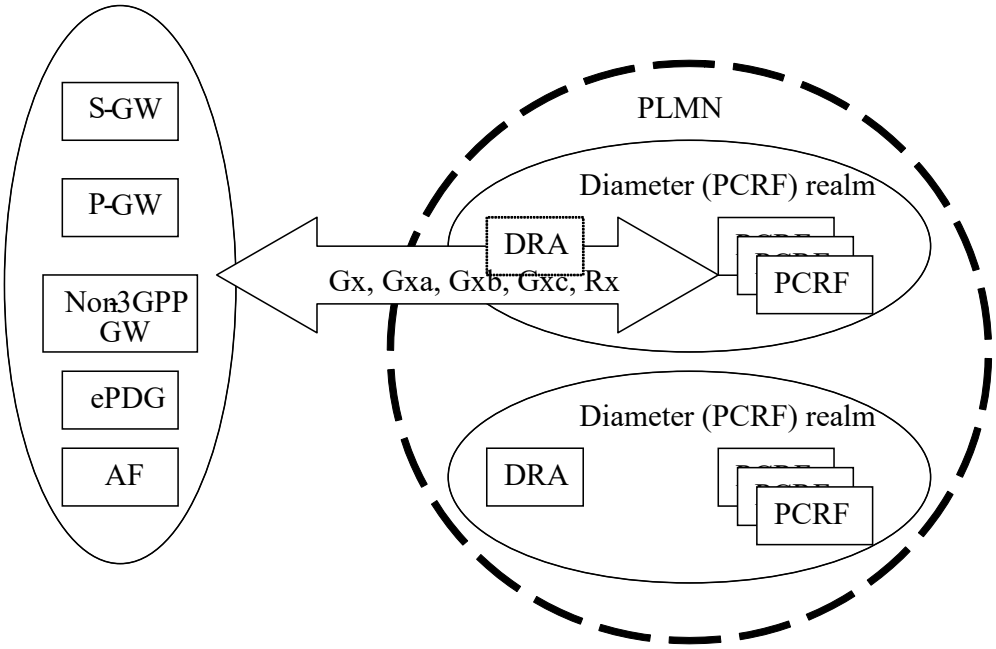

Figure 7.6-1: PCRF selection and discovery using DRA

The DRA functionality should be transparent to the Diameter applications used on the Gx, Gxa/Gxc, S9 or Rx reference points.

In roaming scenario, home routed or local breakout, if the DRA is deployed, the vPCRF is selected by the DRA located in the visited PLMN, and the hPCRF is selected by the DRA located in the home PLMN.

IPR2024-01041 / IPR2024-01042
Petitioners' Exhibit 1010
Page 000067

The parameters available for the DRA to be able to determine the already allocated PCRF depend on the reference point over which the DRA is contacted, as described in clause 7.6.1.

7.7 Gateway Control Session Procedures

7.7.1 Gateway Control Session Establishment

7.7.1.0 General

There are two cases considered for Gateway Control Session Establishment:

1. The PCEF establishes the IP-CAN Session during the Gateway Control session establishment. This happens when the UE attaches to the EPC for the first time.

2. There exists an established IP-CAN Session corresponding to the Gateway Control Session being established. This happens when the BBERF changes, i.e. during BBERF relocation and handovers from and to GTP based EPC.

7.7.1.1 Gateway Control Session Establishment during Attach

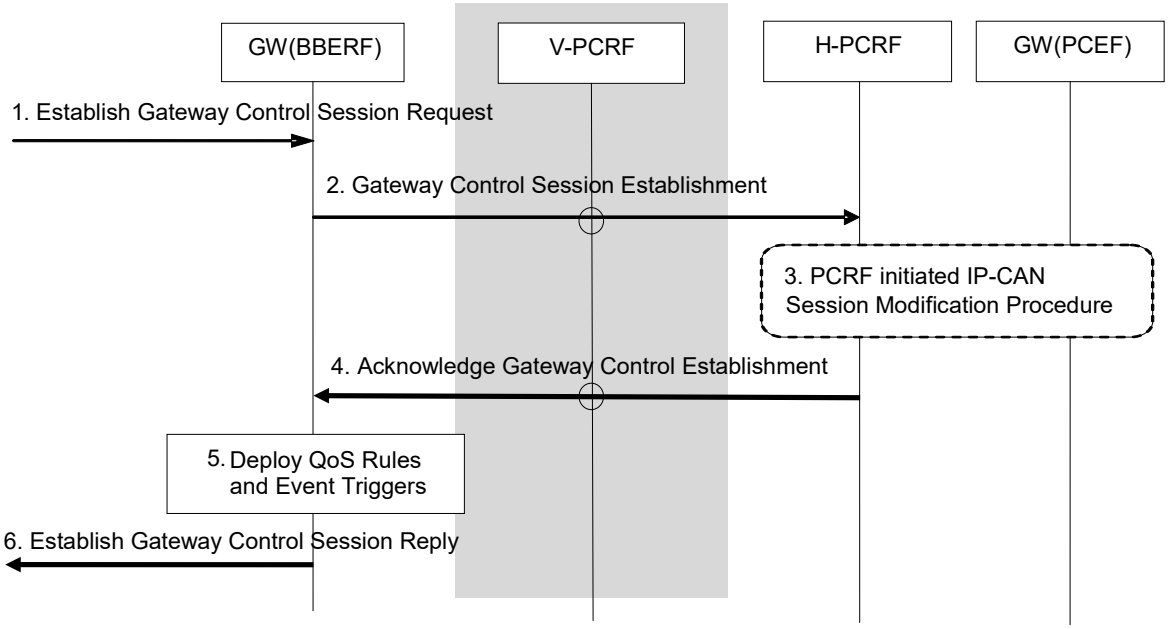

Figure 7.7.1.1-1: Gateway Control Session Establishment during Attach

This procedure concerns both roaming and non-roaming scenarios. In the roaming case when a Gateway Control Session is used, the V-PCRF should proxy the Gateway Control Session Establishment between the BBERF in the VPLMN and the H-PCRF over S9 based on PDN-Id and roaming agreements.

In the non-roaming case (Figure 5.1.1) the V-PCRF is not involved.

1. The GW(BBERF) receives an indication that it must establish a Gateway Control Session.

2. The GW(BBERF) sends the PCRF a Gateway Control Session Establishment. The BBERF includes the following information: IP-CAN Type, UE Identity, PDN Identifier (if known), IP address(es) (if known) and, if available, the IP-CAN bearer establishment modes supported. The IP-CAN Type identifies the type of access used by the UE. The UE's identity and PDN Identifier requested are used to identify the subscriber and in PCRF selection to locate the PCRF function with the corresponding IP-CAN session established by the PDN GW. The BBERF may also include the Default Bearer QoS and APN-AMBR (applicable for case 2b, as defined in

IPR2024-01041 / IPR2024-01042
Petitioners' Exhibit 1010
Page 000068

clause 7.1) Further information is supplied on an access specific basis, as described in the IP-CAN specific Annexes.

3. If the PCRF is required to interact with the GW(PCEF), the PCRF waits until it gets informed about the establishment of the corresponding IP-CAN session (step 7 of the IP-CAN session establishment procedure) and performs a PCRF initiated IP-CAN session modification procedure with the GW(PCEF).

4. The PCRF sends an Acknowledge Gateway Control Session Establishment to the GW(BBERF). The PCRF may include the following information: the chosen IP-CAN bearer establishment mode, QoS Rules and Event Triggers. The QoS policy rules are employed by the GW(BBERF) to perform Bearer Binding. The Event Triggers indicate events that require the GW(BBERF) to report to the PCRF.

5. The QoS Rules and Event Triggers received by the GW(BBERF) are deployed. This will result in bearer binding being performed, according to the rules. This step may trigger IP-CAN bearer establishment procedures. The details of bearer establishment are IP-CAN specific.

6. An indication of Gateway Control Session Established is sent to the entity that triggered the initiation of the session.

7.7.1.2 Gateway Control Session Establishment during BBERF Relocation

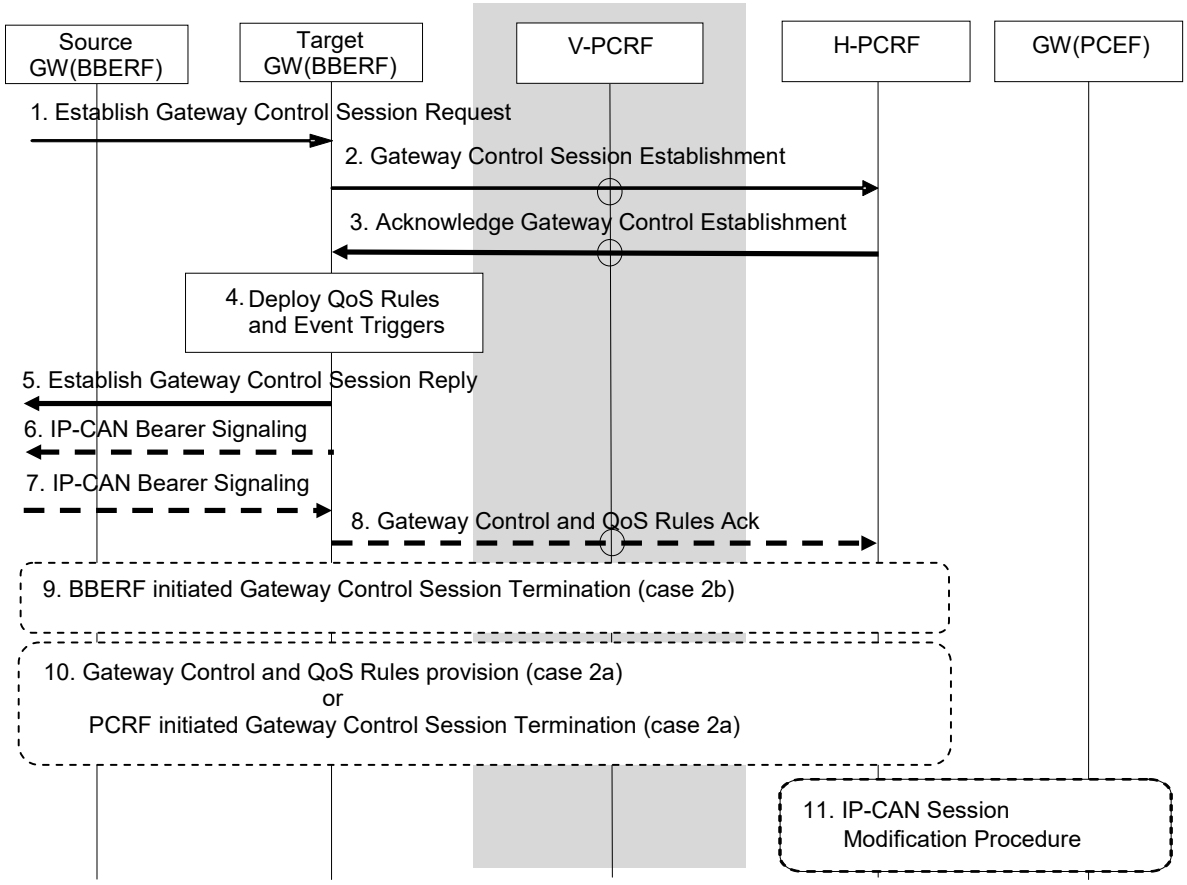

Figure 7.7.1.2-1: Gateway Control Session Establishment during BBERF Relocation

This procedure concerns both roaming and non-roaming scenarios. In the roaming case when a Gateway Control Session is used, the V-PCRF should proxy the Gateway Control Session Establishment between the BBERF in the VPLMN and the H-PCRF over S9 based on PDN-Id and roaming agreements.

In the non-roaming case (Figure 5.1.1) the V-PCRF is not involved.

1. The target GW(BBERF) receives an indication that it must establish a Gateway Control Session.

IPR2024-01041 / IPR2024-01042
Petitioners' Exhibit 1010
Page 000069

2. The target GW(BBERF) sends the PCRF a Gateway Control Session Establishment. The BBERF includes the following information: IP-CAN Type, UE Identity, PDN Identifier (if known), IP address(es) (if known). The IP-CAN Type identifies the type of access used by the UE. The UE's identity and PDN Identifier requested are used to identify the subscriber and in PCRF selection to locate the PCRF function with the corresponding IP-CAN session established by the PDN GW. The BBERF may also include the Default Bearer QoS and APN-AMBR (applicable for case 2b, as defined in clause 7.1). Further information is supplied on an access specific basis, as described in the IP-CAN specific Annexes.

3. If case 2b of clause 7.1 applies and the PCRF correlates the Gateway Control Session with an existing IP-CAN session, it sends an Acknowledge Gateway Control Session Establishment to the target GW(BBERF). The PCRF may include the following information: QoS Rules and Event Triggers. The QoS policy rules are employed by the GW(BBERF) to perform Bearer Binding. The Event Triggers indicate events that require the GW(BBERF) to report to the PCRF. If the BBERF supports NW/UE bearer establishment mode, the PCRF provides QoS rules corresponding to all the active PCC rules for that IP-CAN session,

4. The QoS Rules and Event Triggers received by the target GW(BBERF) are deployed. This will result in bearer binding being performed, according to the rules. This step may trigger IP-CAN bearer establishment procedures. The details of bearer establishment are IP-CAN specific.

5. An indication of Gateway Control Session Established is sent to the entity that triggered the initiation of the session.

6. The target GW(BBERF) initiates the IP-CAN Bearer signalling if required for the QoS Rules and Event Triggers deployed in step 4.

7. The target GW(BBERF) receives the response for the IP-CAN Bearer signalling.

8. The target GW(BBERF) sends the result of the QoS rule activation to the PCRF, indicating whether the resources requested have been successfully allocated.

9. If case 2b applies the source GW(BBERF) initiates the Gateway Control Session Termination procedure as defined in clause 7.7.2.1, if appropriate.

10. If case 2a applies the PCRF initiates a Gateway Control and QoS Rules Provision procedure towards the source GW(BBERF) as defined in clause 7.7.4, if appropriate, in order to remove any QoS Rules affected by the GW(BBERF) re-location. If there is no other IP-CAN session established at the source GW(BBERF), the PCRF instead initiates the Gateway Control Session Termination procedure as defined in clause 7.7.2.2.

11. If the PCC rules previously provided to the GW(PCEF) need to be removed due to the result of the QoS rule activation as received in step 8, the PCRF updates the GW(PCEF). The PCRF first waits for the PCEF initiated IP-CAN session modification procedure to provide the updates. If the IP-CAN session modification procedure already occurred, the PCRF performs an IP-CAN session modification procedure with the GW(PCEF).

IPR2024-01041 / IPR2024-01042
Petitioners' Exhibit 1010
Page 000070

7.7.2 Gateway Control Session Termination

7.7.2.1 GW(BBERF)-Initiated Gateway Control Session Termination

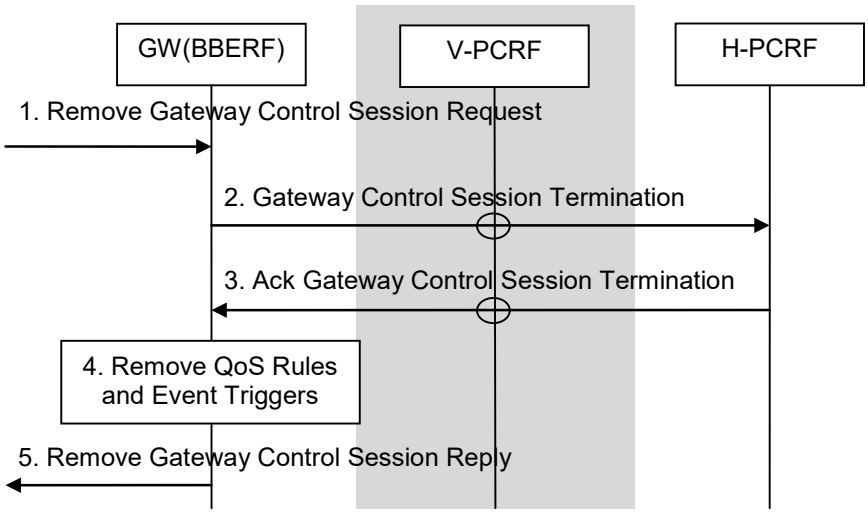

Figure 7.7.2-1: BBERF-Initiated Gateway Control Session Termination

1. The GW(BBERF) is requested to terminate its Gateway Control Session.

2. The GW(BBERF) initiates a Gateway Control Session Termination towards the H-PCRF. If the GW(BBERF) is deployed in a visited network, this procedure is initiated by the GW(BBERF) to the V-PCRF. The V-PCRF forwards the information to the H-PCRF.

Editor's Note: As a result of step 2, in the case where relocation is not being performed, there will be an IP-CAN session termination procedure at this point.

3. The H-PCRF replies to the GW(BBERF) with an Ack Gateway Control Session Termination. If the GW(BBERF) is deployed in a visited network, this information is sent by the H-PCRF to the V-PCRF. The V-PCRF forwards the information to the GW(BBERF).

Editor's Note: It is FFS whether the V-PCRF may release information or other resources associated with Gateway Control Session.

4. The GW(BBERF) removes the QoS rules and Event triggers associated with the Gateway Control Session. This means the GW(BBERF) ceases its bearer binding and other Gateway Control functions associated with the QoS rules and Event Triggers.

5. The GW(BBERF) has completed terminating the session and can continue with the activity that prompted this procedure.

IPR2024-01041 / IPR2024-01042
Petitioners' Exhibit 1010
Page 000071

7.7.2.2 PCRF-Initiated Gateway Control Session Termination

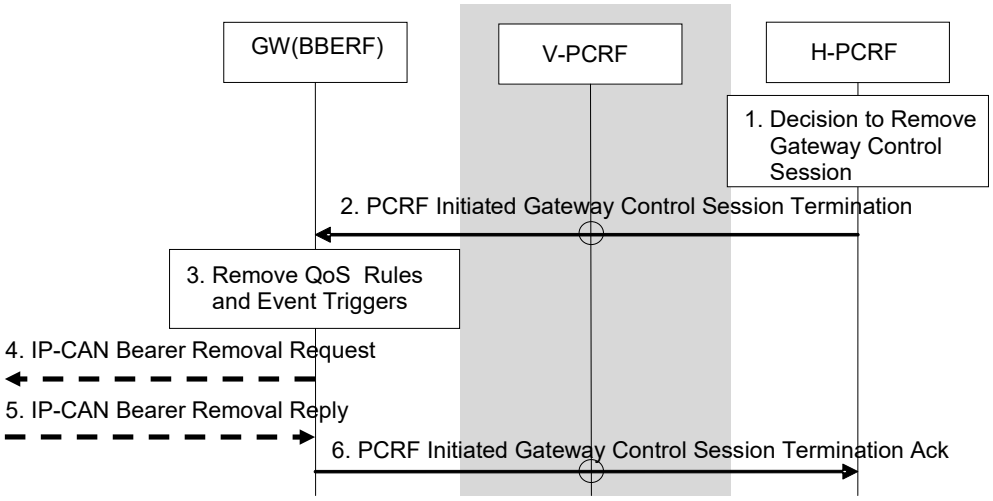

Figure 7.7.2-2: PCRF-Initiated Gateway Control Session Termination

This procedure concerns both roaming and non-roaming scenarios. In the roaming case when a Gateway Control Session is used, the V-PCRF should proxy the Gateway Control Session Termination between the BBERF in the VPLMN and the H-PCRF over S9 based on PDN-Id and roaming agreements.

In the non-roaming case (Figure 5.1.1) the V-PCRF is not involved.

1. The PCRF is requested to terminate its Gateway Control Session.
2. The PCRF sends a PCRF-Initiated Gateway Control Session Termination to the GW(BBERF).

Editor's Note: It is FFS whether the V-PCRF may release information or other resources associated with Gateway Control Session.

3. The GW(BBERF) removes the QoS rules and Event triggers associated with the Gateway Control Session. This means the GW(BBERF) ceases its bearer binding and other Gateway Control functions associated with the QoS rules and Event Triggers.
4. If the bearer(s) corresponding to the removed QoS rules are still established, the GW(BBERF) initiates an IP-CAN specific bearer removal procedure.
5. The GW(BBERF) receives the response for the IP-CAN specific bearer removal procedure.
6. The GW(BBERF) replies to the PCRF with an PCRF-Initiated Gateway Control Session Termination acknowledgement.

7.7.3 Gateway Control and QoS Rules Request

7.7.3.1 General

There are two cases considered for a Gateway Control and QoS Rules Request depending on the parameters the GW(BBERF) receives:

Case A: In case the GW(BBERF) action does not depend on the subsequent IP-CAN session modification, the GW(BBERF) can acknowledge the request after interacting with the PCRF.

NOTE 1: If QoS rules have to be updated due to the event reporting, the PCRF shall use the Gateway Control and QoS Rules Provision procedure.

Case B: The GW(BBERF) is requested to obtain QoS rules for a Gateway Control Session or to deliver IP-CAN-specific parameters or both.

IPR2024-01041 / IPR2024-01042
Petitioners' Exhibit 1010
Page 000072

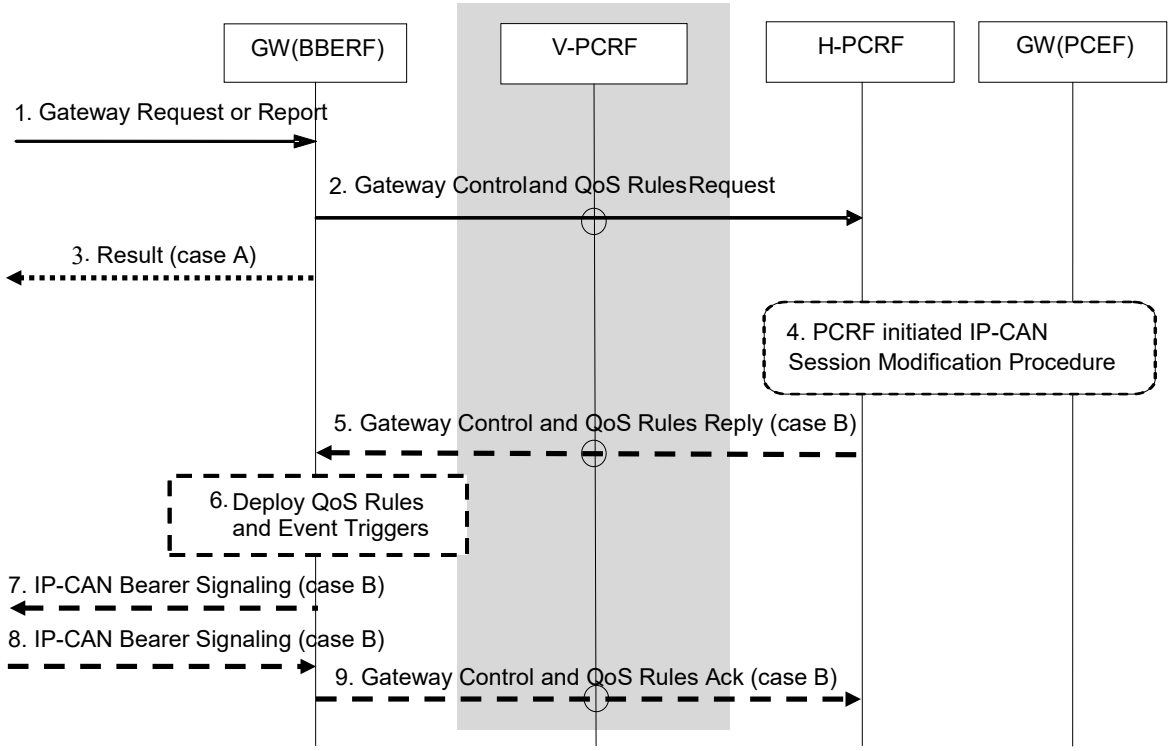

Figure 7.7.3-1: Gateway Control and QoS Rules Request

NOTE 2: If QoS rules have to be updated for case A, the PCRF shall use the Gateway Control and QoS Rules Provision procedure (clause 7.7.4).

This procedure concerns both roaming and non-roaming scenarios. In the roaming case when a Gateway Control Session is used, the V-PCRF should proxy the Gateway Control and QoS Rules Request between the BBERF in the VPLMN and the H-PCRF over S9 based on PDN-Id and roaming agreements.

In the non-roaming case (Figure 5.1.1) the V-PCRF is not involved.

1. The GW(BBERF) is requested to either report an event or obtain QoS rules or both for a Gateway Control Session.

2. The GW(BBERF) sends a Gateway Control and QoS Rules Request to the PCRF and includes the new IP-CAN bearer establishment modes if changed. The information sent by the GW(BBERF) to the PCRF includes: a request for resource authorization and/or a report corresponding to a deployed Event Trigger.

3. If the GW(BBERF) is only requested to report an event, the GW(BBERF) acknowledges the step 1 by sending a result to the entity that triggered this procedure.

4. The PCRF initiated IP-CAN Session Modification Procedure may occur as the result of the Gateway Control and QoS Rules Request procedure, either to forward an Event Report to the GW(PCEF) or to issue new or revised PCC Rules and Event Triggers, or both an Event Report and a PCC Rules and Event Triggers provision.

5. If the GW(BBERF) asked for new QoS rules or IP-CAN-specific parameters need to be delivered back to the GW(BBERF) or both, the PCRF sends a Gateway Control and QoS Rules Reply to the GW(BBERF). This interaction may include QoS Rules and Event Triggers.

   If there are multiple BBERFs associated with the IP-CAN session and the request in Step 2 is from a non-primary BBERF (see clause 6.2.1.5), only QoS rules corresponding to already activated PCC rules are included in the reply. If a request from a non-primary BBERF results in an authorization of a new QoS rule or to a modification of an existing QoS rules, the PCRF shall reject the request.

6. The QoS Rules and Event Triggers, if any, received by the GW(BBERF) are deployed. This will result in bearer binding being performed, according to the rules. This may result in the binding of additional SDFs or a change in

IPR2024-01041 / IPR2024-01042
Petitioners' Exhibit 1010
Page 000073

the binding of previously bound SDFs. Subsequent events corresponding to the Event Triggers will cause an Event Report to be delivered to the PCRF by means of a Gateway Control and QoS Rules Request procedure.

7. The GW(BBERF) initiates the IP-CAN Bearer signalling if required for the QoS Rules and Event Triggers deployed in step 6.

8. The GW(BBERF) receives the response for the IP-CAN Bearer signalling.

9. If the step 5 contained new and/or modified QoS Rules, the result of the QoS rule activation is returned to the PCRF, indicating whether the resources requested have been successfully allocated.

7.7.3.2 Event reporting for PCEF in visited network and locally terminated Gxx interaction

This procedure is only used for the event reporting for a PCEF in the visited network and when the Gxx interaction is locally terminated at the V-PCRF.

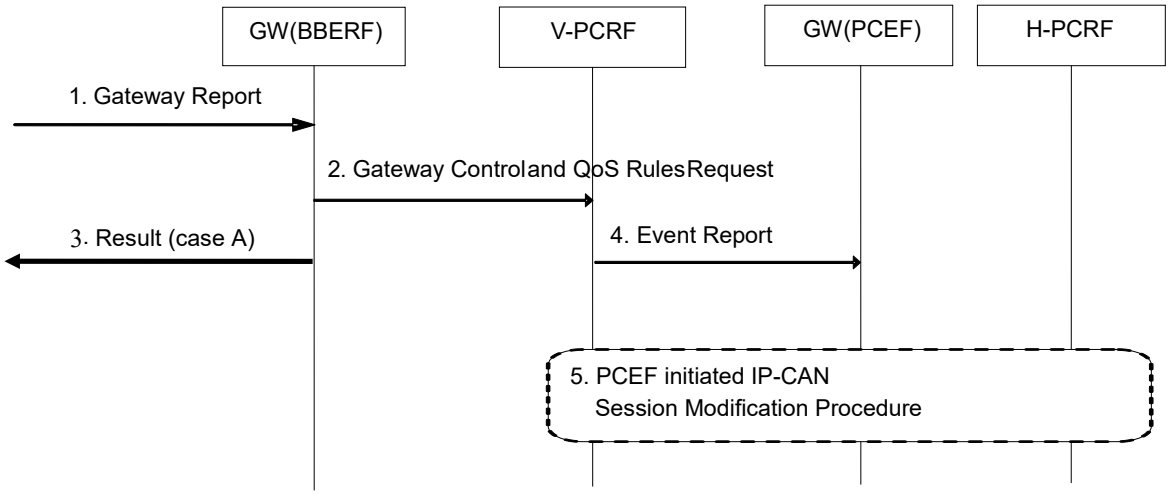

Figure 7.7.3-2: Event reporting for PCEF in visited network and locally terminated Gxx interaction

1. The GW(BBERF) is requested to report an event for a Gateway Control Session.

2. The GW(BBERF) sends a Gateway Control and QoS Rules Request to the V-PCRF and includes the new IP-CAN bearer establishment modes if changed. The information sent by the GW(BBERF) to the V-PCRF includes a report corresponding to a deployed Event Trigger.

3. Since the GW(BBERF) is only requested to report an event, the GW(BBERF) acknowledges the message received in step 1 by sending a result message to the entity that triggered this procedure.

4. The V-PCRF forwards the report corresponding to a deployed Event Trigger to the PCEF.

5. A PCEF initiated IP-CAN Session Modification Procedure may occur as the result of the received report, either to forward the report about the relevant deployed Event Trigger(s) to the H-PCRF or to request new or revised PCC Rules and Event Triggers, or both.

IPR2024-01041 / IPR2024-01042
Petitioners' Exhibit 1010
Page 000074

7.7.4 Gateway Control and QoS Rules Provision

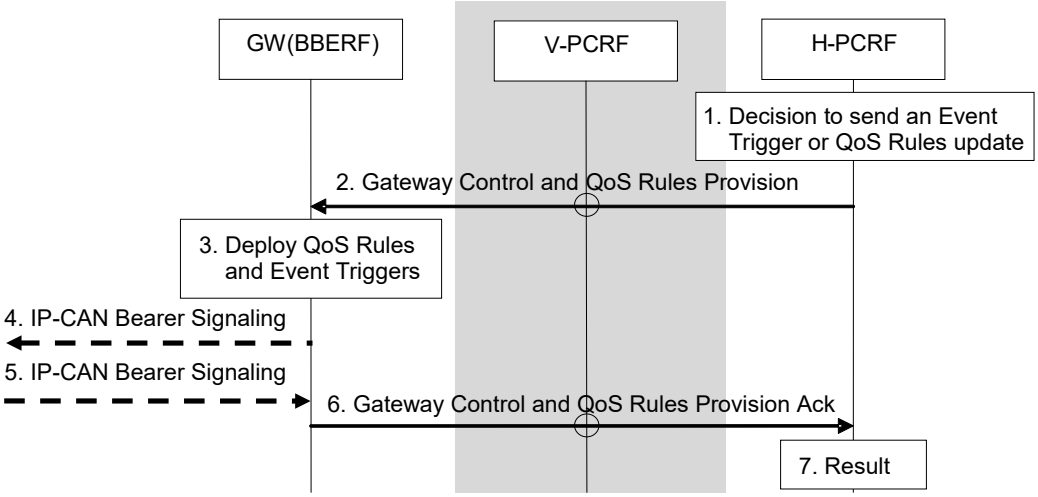

Figure 7.7.4-1: Gateway Control and QoS Rules Provision

This procedure concerns both roaming and non-roaming scenarios. In the roaming case when a Gateway Control Session is used, the V-PCRF should proxy the Gateway Control and QoS Rules Provision between the BBERF in the VPLMN and the H-PCRF over S9 based on PDN-Id and roaming agreements.

In the non-roaming case (Figure 5.1.1) the V-PCRF is not involved.

1. The PCRF is requested to update the QoS Rules and Event triggers for a Gateway Control Session.

2. The PCRF sends a Gateway Control and QoS Rules Provision to the GW(BBERF). It will include QoS Rules and Event Triggers. If the service data flow is tunnelled at the BBERF, the information about the mobility protocol tunnelling encapsulation header may be included. It is also possible that this interaction includes an Event Report originating from the GW(PCEF) and relayed by the PCRF to the BBERF. This Event Report enables a GW(PCEF)-originating interaction to be sent by way of the PCC infrastructure to the BBERF in situations that communication is needed between the GW(PCEF) and the GW(BBERF) and no interface exists between the GWs.

3. The QoS Rules and Event Triggers received by the GW(BBERF) are deployed. This may result in bearer binding being performed, according to the rules. Subsequent events corresponding to the Event Triggers will cause an Event Report to be delivered to the PCRF by means of a Gateway Control and QoS Rules Request procedure.

4. The GW(BBERF) initiates the IP-CAN Bearer signalling if required for the QoS Rules and Event Triggers deployed in step 3.

5. The GW(BBERF) receives the response for the IP-CAN Bearer signalling.

6. The GW(BBERF) sends a Gateway Control and QoS Rules Provision Ack (Result) to the PCRF. The Result information element indicates whether the indicated QoS Rules could be implemented.

7. The PCRF has completed updating the session and can continue with the activity that prompted this procedure.

   If there are multiple BBERFs associated with the IP-CAN session, then the processing of the response is as follows depending on whether the BBERF is a primary BBERF or a non-primary BBERF:

   - If a primary-BBERF reports failure to install a QoS rule in Step 4, the PCRF also removes the same QoS rule from the non-primary BBERFs. The PCRF also removes the corresponding PCC rule from the PCEF.

   - If a non-primary BBERF reports failure to install a QoS rule, the PCRF updates the enforcement status for that particular BBERF in its record but does not perform any further action.

IPR2024-01041 / IPR2024-01042
Petitioners' Exhibit 1010
Page 000075

7.7.5 Void

IPR2024-01041 / IPR2024-01042
Petitioners' Exhibit 1010
Page 000076

Annex A (normative): Access specific aspects (3GPP)

A.1 GPRS

Editor's Note: It is FFS whether this clause need to be maintained for Rel-8.

A.1.0 General

The GPRS IP-CAN employs, for an IP-CAN session, the concept of PDP contexts in order to provide an information transmission path of defined capacity (QoS). For GPRS, the IP-CAN bearer is the PDP context.

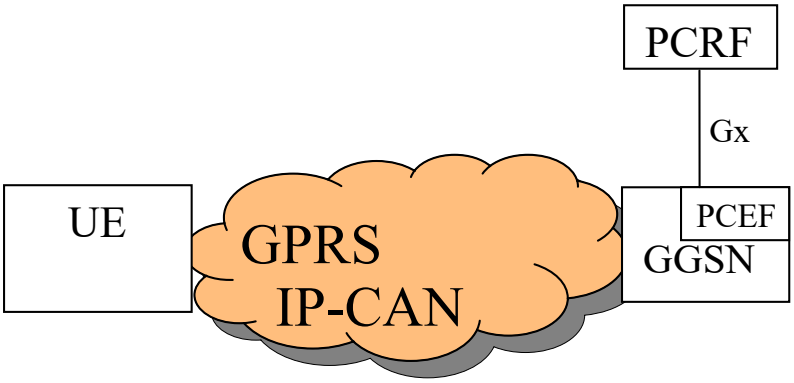

Figure A.1: The GPRS IP-CAN

A.1.1 High level requirements

A.1.1.1 General

A.1.1.2 Charging related requirements

It shall be possible for the charging system to select the applicable rate based on:

- SGSN IP address that is used by the GTP control plane for the handling of control messages.
- location with the granularity as specified for the credit re-authorization trigger Location change in clause A.1.3.1.3;
- RAT type.

A.1.1.3 Policy control requirements

IP-CAN Bearer QoS control allows the PCC architecture to control the "Authorized QoS" of a PDP context. Criteria such as the QoS subscription information may be used together with service-based, subscription-based, or a pre-defined PCRF internal policies to derive the "Authorized QoS" of a PDP context.

NOTE: If the PCRF provides authorized QoS for both the IP-CAN bearer and PCC rule(s), the enforcement of authorized QoS of the individual PCC rules takes place first.

IPR2024-01041 / IPR2024-01042
Petitioners' Exhibit 1010
Page 000077

A.1.2 Architecture model and reference points

A.1.2.1 Reference points

A.1.2.1.1 Gx reference point

The Gx reference point enables the signalling of PCC rules, which govern the PCC behaviour, and it supports the following GPRS-specific functions:

- Indication of PDP context activation, modification and deactivation.

A.1.2.2 Reference architecture

In the GPRS IP-CAN, the Bearer Binding and Event Reporting Function (BBERF) does not apply.

A.1.3 Functional description

A.1.3.1 Overall description

A.1.3.1.1 Binding mechanism

A.1.3.1.1.0 General

As explained in clause 6.1.1, the binding mechanism is performed in three different steps: session binding, PCC rule authorization and bearer binding. Session binding has no GPRS specifics.

For the GPRS case bearer binding is performed by:

- PCRF, when the selected operation mode is UE-only, see [12], either due to PCRF decision or network/UE capability;
- PCRF and PCEF (i.e. the PCRF performs the binding of the PCC rules for user controlled services while the PCEF performs the binding of the PCC rules for the network controlled services), when the selected operation mode is UE/NW.

The bearer binding performed by the PCRF shall bind a PCC rule that is authorized for a TFT packet filter to the PDP context the TFT packet filter has been assigned by the UE. The binding mechanism shall comply with the established traffic flow template (TFT) packet filters (for the whole IP-CAN session).

The bearer binding performed by the PCEF shall compare the PCC rule QoS parameters with the PDP context QoS parameters and bind a PCC rule:

- to a candidate PDP context with a matching QoS class;
- to a candidate PDP context with a matching QoS class that, after modification of the bitrates, fulfils the PCC rule QoS demands;
- to a new PDP context with a matching QoS class, if there is no suitable candidate PDP context present.

The bearer binding mechanism associates the PCC rule with the PDP context to carry the service data flow. The association shall:

- cause the downlink part of the service data flow to be directed to the PDP context in the association, and
- assume that the UE directs the uplink part of the service data flow to the PDP context in the association.

Thus, the detection of the uplink part of a service data flow shall be active on the PDP context, which the downlink packets of the same service data flow is directed to. The detection of the uplink part of the service data flow may be active, in parallel, on any number of additional PDP contexts.

IPR2024-01041 / IPR2024-01042
Petitioners' Exhibit 1010
Page 000078

A.1.3.1.1.1 Bearer binding mechanism allocated to the PCEF

When the bearer binding mechanism is allocated to the PCEF, no per bearer information is required to be communicated over the Gx reference point.

Once the PCRF has provided the PCC rule decisions at the IP-CAN session establishment procedure, the PCRF shall provide further PCC rule decisions

- using the PCRF initiated IP-CAN Session Modification procedure; or
- in response to an event report from the PCEF (the GW(PCEF) initiated IP-CAN Session Modification).

When the PCEF performs the bearer binding the ARP information in the PCC rule shall be ignored.

A.1.3.1.1.2 Bearer binding mechanism allocated to the PCRF

If a new PDP context is required in order to successfully perform the bearer binding the PCRF will set the PCC rule as binding-pending status until the PCEF reports the establishment of a PDP context that fulfils the PCC rule demands or the PCC rule is removed.

The following particularities apply when the bearer binding mechanism is allocated to the PCRF:

- The PCEF
  - shall include a bearer reference in all requests for PCC decisions;
  - shall report bearer QoS class identifier and the associated bitrates for new/modified PDP contexts;
  - shall report the TFT filter status for new PDP contexts and for modified TFTs;
  - shall report the deactivation of a PDP context
- The PCRF
  - shall provide the bearer reference for the binding result when activating a PCC rule;
  - shall arm the GPRS-specific IP-CAN event trigger "PDP context activity".
- shall arm the event trigger "traffic mapping information change".

NOTE: For the above case, the allocation of the bearer binding mechanism to the PCRF facilitates the migration from Rel-6 products to Rel-7 products. The allocation of the binding mechanism may be re-evaluated in future releases.

When the PCRF performs the bearer binding the ARP information in the PCC rule shall be ignored.

A.1.3.1.2 Reporting

A container may be closed and a new container opened by the triggering of event triggers.

A.1.3.1.3 Credit management

For GPRS the PCEF shall initiate one credit management session for each PDP context.

For GPRS the credit re-authorisation triggers in table A.1 shall apply in addition to the ones in table 6.1.

Table A.1: GPRS specific credit re-authorization triggers

Credit re-authorization trigger	Description
SGSN change	The UE has moved to a new SGSN.
RAT type change.	The characteristics of the air interface, communicated as the radio access type, has changed.
Location change (routeing area)	The routeing area of the UE has changed.
Location change (CGI/SAI)	The CGI/SAI of the UE has changed.

IPR2024-01041 / IPR2024-01042
Petitioners' Exhibit 1010
Page 000079

If the Location change trigger for CGI / SAI or RAI is armed, the GGSN should request the SGSN to report any changes in location to the level indicated by the trigger according to the procedures described in TS 23.060 [12]. If credit-authorization triggers and event triggers require different levels of reporting of location change for different PDP contexts for a single UE, the SGSN reports location changes to the highest level of detail required. However, the GGSN should not trigger a credit re-authorization if the report received is more detailed than requested by the OCS.

A.1.3.1.4 Event Triggers

For GPRS the event triggers in table A.2 shall apply in addition to the ones in table 6.2.

Table A.2: GPRS specific event triggers

Event trigger	Description
SGSN change	The UE has moved to a new SGSN.
RAT type change.	The characteristics of the air interface, communicated as the radio access type, has changed.
PDP Context Activity	The GGSN has received a request for a PDP context activation, modification or deactivation. Note 1.
Location change (routeing area)	The routeing area of the UE has changed.
Location change (CGI/SAI)	The CGI/SAI of the UE has changed.

NOTE 1: Available only when the bearer binding mechanism is allocated to the PCRF.

If the Location change trigger is armed, the GGSN should request the SGSN to report any changes in location to the level indicated by the trigger according to the procedures described in TS 23.060 [12]. If credit-authorization triggers and event triggers require different levels of reporting of location change for different PDP contexts for a single UE, the SGSN reports location changes to the highest level of detail required. However, the GGSN should not trigger a request for PCC rules if the report received is more detailed than requested by the PCRF.

For GPRS the traffic mapping information is represented by the TFT information.

For GPRS the loss/recovery of transmission resources is indicated by a PDP context modification changing the 'Maximum bitrate' UMTS QoS parameter to/from 0 kbit/s (as described in the PDP context preservation procedures in TS 23.060 [12]).

A.1.3.2 Functional entities

A.1.3.2.1 Policy Control and Charging Rules Function (PCRF)

A.1.3.2.1.1 Input for PCC decisions

The PCRF shall accept any of the following input which the PCEF may provide, specific for GPRS, as a basis for decisions on PCC rule operations.

The following information represents GPRS specific values of the ones listed in clause 6.2.1.1:

- Subscriber Identifier in the form of IMSI, MSISDN;
- A PDN identifier in the form of APN;
- A PLMN identifier in the form of SGSN Mobile Country Code and Mobile Network Code;
- Type of IP-CAN set to GPRS;
- IP-CAN bearer attributes in the form of:
  - Requested QoS, for a PDP context;
  - TFT, to enable the identification of the corresponding PDP Context;
- Location of the subscriber in the form of CGI/SAI or RAI.

The following information is in addition to the ones listed in clause 6.2.1.1:

- RAT type.

IPR2024-01041 / IPR2024-01042
Petitioners' Exhibit 1010
Page 000080

A.1.3.2.2 Policy and Charging Enforcement Function (PCEF)

A.1.3.2.2.1 General

This functional entity is located in the GGSN. The GGSN provides the GPRS-specific bearer QoS handling.

The PCEF shall contact the PCRF based on PCRF address information that shall be configured for the access point name (APN) together with the IMSI or MSISDN (if needed).

The PCEF shall maintain a 1:1 mapping from the QoS Class Identifier to a UMTS QoS profile and vice versa. Each QoS Class Identifier (QCI) parameter value has a 1:1 mapping to a set of QoS parameters defined for GPRS, TS 23.107 [14]. A recommended mapping is listed in table A.3.

Table A.3: Recommended mapping for QoS Class Identifier to/from QoS parameters

GPRS QoS Class Identifier value	UMTS QoS parameters			
	Traffic Class	THP	Signalling Indication	Source Statistics Descriptor
1	Conversational	n/a	n/a	speech (NOTE)
2	Conversational	n/a	n/a	unknown
3	Streaming	n/a	n/a	speech (NOTE)
4	Streaming	n/a	n/a	unknown
5	Interactive	1	Yes	n/a
6	Interactive	1	No	n/a
7	Interactive	2	No	n/a
8	Interactive	3	No	n/a
9	Background	n/a	n/a	n/a
NOTE: The operator's configuration should reserve QCI values that map to "speech" for service data flows consisting of speech (and the associated RTCP) only.				

The remaining UMTS QoS parameters are subject to operator's policies and either provisioned in the Create PDP Context Request or locally defined in GGSN.

NOTE: Any change of the ARP parameter by the PCEF may get overwritten by the SGSN due to subscription enforcement.

For each PDP context, the PCEF shall accept information during bearer establishment and modification relating to:

- The user and terminal (e.g. MSISDN, IMEISV);
- Bearer characteristics (e.g. QoS negotiated, APN, IM CN Subsystem signalling flag);
- Network related information (e.g. MCC and MNC).

The PCEF shall use this information in the OCS request/reporting or request for PCC rules.

A GGSN may provide more than one APN for access to the same PDN. It should be possible to enable or disable PCC functionality for each APN, independent from the other APNs for access to the same PDN. Once the PCC functionality is disabled, regular GPRS charging and policy methods would be applied, i.e. no PCRF interaction would occur.

For each PDP context, there shall be a separate OCS request/OFCS reporting, so this allows the OCS and offline charging system to apply different rating depending on the PDP context.

The GGSN shall report the service data flow based charging data on a per PDP context basis.

The GGSN shall be able to request the SGSN to provide reports of changes in CGI/SAI/RAI of a UE as directed by the credit re-authorization triggers and/or event triggers.

IPR2024-01041 / IPR2024-01042
Petitioners' Exhibit 1010
Page 000081

A.1.3.2.2.2 Service data flow detection

For uplink traffic, in the case of GPRS, all the uplink parts of service data flows templates, which are associated with the PDP context are candidates for matching in the detection process.

NOTE: Service data flow templates, which are not associated with the PDP context the packet was received, are not candidates for matching (dashed in the figure).

A.1.3.2.2.3 Packet Routeing and Transfer Function

The PCEF performs the packet routeing and transfer functions as specified in TS 23.060 [12], with the differences specified in this clause.

For the PDP address of an UE, the PCEF routes downlink packets to the different PDP contexts based on the downlink parts of the service data flow templates, in the active PCC rules and their routeing associations to the PDP contexts. The association between an active PCC rule and a PDP context shall correspond to the downlink TFT received from the UE. Each active PCC rule shall have a single routeing association to a PDP context. Upon reception of a packet, the PCEF evaluates the downlink part of the service data flow templates of the PCC rules activated for the PDP address in order of precedence to find a match. When the first match is found, the packet is tunnelled to the SGSN via the PDP context, for which the PCC rule has the routeing association. If no match is found, the PCEF shall silently discard the packet.

The UE shall define TFTs that enable successful binding at the PCRF for service data flows requiring a binding to occur.

For each uplink packet, the UE should choose the PDP context that is used for the downlink direction of the same service data flow, as declared in the TFT information. The PCEF shall only apply the uplink parts of the service data flow templates of the PCC rules, which are associated with the same PDP context as the uplink packet arrived on.

The packet filters, to be applied on dedicated signalling PDP contexts, shall form PCC rules, which shall be granted higher precedence than any other PCC rule and be active on the dedicated signalling context.

A.1.3.2.2.4 Measurement

The details of measurement are specified in TS 32.251 [9].

A.1.3.2.3 Application Function (AF)

Void.

A.1.3.3 Policy and charging control rule

A.1.3.3.1 General

Void.

A.1.3.3.2 Policy and charging control rule operations

The PCRF associates, at activation, a PCC rule with a PDP context at the PCEF.

A.1.3.4 IP-CAN bearer and IP-CAN session related policy information

The authorized QoS per bearer (UE-initiated IP-CAN bearer activation/modification) and the authorized MBR per QCI (network initiated IP-CAN bearer activation/modification) shall be mapped by the PCEF to the GBR and MBR of the PDP context as described in clause 6.2.2.4. The mapping of the QCI to the UMTS QoS profile parameters is defined in clause A.1.3.2.2.1.

IPR2024-01041 / IPR2024-01042
Petitioners' Exhibit 1010
Page 000082

A.1.4 PCC Procedures and flows

A.1.4.1 Introduction

For GPRS, the GW(PCEF) is the GGSN. The IP-CAN bearer is the PDP context and the IP-CAN Session is established by the Create PDP Context message. The IP-CAN Session is terminated when the last PDP Context of the specific IP address is deleted and the IP Address is released.

A.1.4.2 IP-CAN Session Establishment

The IP-CAN session establishment procedure (described in clause 7.2) is triggered at the GGSN by receiving a Create PDP Context Request message for the first PDP Context that is created for a new IP Address. The successful procedure results in an establishment of a UE IP Address and a PDP Context for the UE. The Create PDP Context Response message, indicating that a new PDP context is created, is sent to the SGSN. The response may include any changes in QoS according to bearer binding and policy enforcement.

During the PDP context activation procedure, it shall be possible to forward the network capability of reporting of changes in CGI/SAI/RAI to the PCRF.

A.1.4.3 IP-CAN Session Termination

A.1.4.3.1 UE initiated IP-CAN Session termination

The UE initiated IP-CAN Session termination procedure (described in clause 7.3.1) is triggered at the GGSN by receiving a Delete PDP Context request message if this is the deletion of the last PDP Context for the IP Address or the Teardown Indicator in the Delete PDP Context Request indicates that all PDP contexts that share the same IP address should be deactivated. All PDP Contexts in the IP-CAN Session are deleted in the GGSN. The IP Address of the UE is released. The Delete PDP Context Response message, indicating that the PDP context(s) is deleted, is sent to the SGSN.

A.1.4.3.2 GW initiated IP-CAN Session termination

The GW initiated IP-CAN Session termination procedure (described in clause 7.3.2) is triggered if the GGSN detects that the IP-CAN Session shall be terminated. The Delete PDP Context request message is sent by the GGSN to the SGSN.

This may be the deletion of the last PDP Context for the IP Address. If not, the GGSN shall set the Teardown Indicator in the Delete PDP Context Request message to indicate that all PDP contexts that share that same IP address shall also be deactivated. All PDP Contexts in the IP-CAN Session are deleted. The IP Address of the UE is released. The Delete PDP Context Response, indicating that the PDP context(s) is deleted, is received from the SGSN.

A.1.4.4 IP-CAN Session Modification

A.1.4.4.1 IP-CAN Session Modification; GW(PCEF) initiated

The GW(PCEF) initiated IP-CAN Session modification procedure (described in clause 7.4.1) is triggered at the GGSN by receiving one of the following messages:

- Create PDP Context Request message;
- Update PDP Context Request message;
- Delete PDP Context Request message;
- a Change Notification message (indicating the new CGI, SAI or RAI) – see TS 23.060 [12].

In case of a Create PDP Context Request message, the modification of the IP-CAN Session is the addition of a new PDP Context to the IP-CAN Session. The new PDP Context is added with specific QoS requirements and traffic mapping information (TFT). A Create PDP Context Response message, indicating that a new PDP context is created, is sent to the SGSN. The response may include any changes in QoS according to bearer binding and policy enforcement.

IPR2024-01041 / IPR2024-01042
Petitioners' Exhibit 1010
Page 000083

In case of an Update PDP Context Request, a PDP Context in the IP-CAN Session is modified. The modification may include modifying the QoS and/or the traffic mapping information. The Update PDP Context Response message, indicating that a PDP context is modified, is sent to the SGSN. The response may include any changes in QoS according to bearer binding and policy enforcement.

In case of a Delete PDP Context Request message, a PDP Context in the IP-CAN Session is deleted. The Delete PDP Context Response message, indicating that a PDP context is deleted, is sent to the SGSN.

A Change Notification message indicating a change in CGI / SAI or RAI information is received when there are only changes regarding the current location of the UE. A change in CGI / SAI or RAI may also be notified within other session management messages.

A.1.4.4.2 IP-CAN Session Modification; PCRF initiated

The PCRF initiated IP-CAN Session modification procedure (described in clause 7.4.2) may result in a GGSN initiated PDP Context Modification or Deactivation or a Network Requested secondary PDP Context Activation.

If a PDP Context in the IP-CAN Session needs to be modified, the GGSN sends an Update PDP Context Request message. The modification may include modifying the QoS negotiated or the required CGI/SAI/RAI change reporting. The Update PDP Context Response message, indicating that a PDP context is modified, will be received from the SGSN.

If a PDP Context in the IP-CAN Session needs to be deleted, the GGSN sends a Delete PDP Context Request message. The Delete PDP Context Response message, will be received from the SGSN.

If the PCEF bearer binding yields that a new PDP context is required, the PCEF shall initiate the Network Requested secondary PDP Context Activation procedure.

NOTE: If online charging is applicable, with PCEF bearer binding and a new PDP Context is required, the PCEF may not have all the information (e.g. NSAPI and negotiated QoS) associated with that PDP context for the credit authorisation until the activation procedure is complete and therefore a second credit authorisation may be necessary to provide the remaining information.

A.2 Void

A.3 Void

A.4 3GPP Accesses (GERAN/UTRAN/E-UTRAN) - GTP-based EPC

A.4.0 General

For 3GPP Access (GTP-based), architecture details are described in TS 23.401 [17].

A.4.1 High Level Requirements

A.4.1.1 Charging related requirements

It shall be possible for the charging system to select the applicable rate based on:

IPR2024-01041 / IPR2024-01042
Petitioners' Exhibit 1010
Page 000084

- Location with the granularity as specified for the credit re-authorization trigger Location change in clause A.4.3.1.1;
- RAT type.

A.4.1.2 QoS control

For 3GPP Access (GTP based) it shall be possible to apply QoS control at APN-level.

QoS control per APN allows the PCC architecture to control the authorized APN-AMBR to be enforced for the total bandwidth usage of non-GBR QCIs at the PCEF within the same APN.

NOTE: For the enforcement of the APN-AMBR for all IP-CAN sessions to the same APN, the IP-CAN is required to select the same PCEF for all of them.

A.4.2 Architectural Model and Reference Points

A.4.2.1 Reference architecture

In the 3GPP Access (GTP-based) architecture, see TS 23.401 [17],

- the Policy and Charging Enforcement Function (PCEF) is allocated to the PDN GW;
- the Bearer Binding and Event Reporting Function (BBERF) does not apply.

A.4.3 Functional Description

A.4.3.1 Overall description

A.4.3.1.1 Credit management

For EPS the credit re-authorisation triggers in table A.4.3-1 shall apply in addition to the ones in table 6.1.

Table A.4.3-1: EPS specific credit re-authorization triggers

Credit re-authorization trigger	Description
SGSN change	The UE has moved to a new SGSN. (Note 2)
Serving GW change	The UE has moved to a new Serving GW. (Note 1)
RAT type change.	The characteristics of the air interface, communicated as the radio access type, has changed.
Location change (routeing area)	The routeing area of the UE has changed. (Note 2)
Location change (tracking area)	The tracking area of the UE has changed. (Note 1)
Location change (ECGI)	The ECGI of the UE has changed.(Note 1)
Location change (CGI/SAI)	The CGI/SAI of the UE has changed.(Note 2)
NOTE 1: These triggers are used for E-UTRAN access. NOTE 2: These triggers are used for GERAN/UTRAN accesses.	

If the Location change trigger for GERAN/UTRAN or E-UTRAN is armed, the PDN GW should request the Serving GW (then SGSN or MME specifically) to report any changes in location to the level indicated by the trigger according to the procedures described in TS 23.060 [12] or TS 23.401 [17].

A.4.3.1.2 Event Triggers

For EPS the event triggers in table A.4.3-2 shall apply in addition to the ones in table 6.2.

IPR2024-01041 / IPR2024-01042
Petitioners' Exhibit 1010
Page 000085

Table A.4.3-2: EPS specific event triggers

Event trigger	Description	Reported from	Condition for reporting
SGSN change	The UE has moved to a new SGSN. (Note 2)	PCEF, BBERF	PCRF
Serving GW change	The UE has moved to a new Serving GW. (Note 1)	PCEF	PCRF
RAT type change.	The characteristics of the air interface, communicated as the radio access type, has changed.	PCEF, BBERF	PCRF
Location change (routeing area)	The routeing area of the UE has changed.	PCEF, BBERF	PCRF
Location change (tracking area)	The tracking area of the UE has changed. (Note 1)	PCEF, BBERF	PCRF
Location change (ECGI)	The ECGI of the UE has changed.(Note 1)	PCEF, BBERF	PCRF
Location change (CGI/SAI)	The CGI/SAI of the UE has changed.(Note 2)	PCEF, BBERF	PCRF
Subscribed APN-AMBR change	The subscribed APN-AMBR has changed	PCEF, BBERF	PCRF
EPS Subscribed QoS change	The QoS of the default EPS bearer has changed.	PCEF, BBERF	PCRF
NOTE 1: These triggers are used for E-UTRAN access. NOTE 2: These triggers are used for GERAN/UTRAN accesses.			

NOTE 1: These triggers are used for E-UTRAN access. NOTE 2: These triggers are used for GERAN/UTRAN accesses.	

If the Location change trigger is armed, the PDN GW should request the Serving GW (then SGSN or MME specifically) to report any changes in location to the level indicated by the trigger according to the procedures described in TS 23.060 [12] or TS 23.401 [17].

A.4.3.1.3 Binding mechanism

As explained in clause 6.1.1, the binding mechanism is performed in three steps: Session Binding, PCC Rule authorization and Bearer Binding.

Session Binding and PCC Rule authorization have no 3GPP Access (GTP-based) specifics.

For the 3GPP Access (GTP-based) the Bearer Binding is performed by the PCEF. For GERAN/UTRAN in UE-only mode the Bearer Binding mechanism is restricted by the UE provided binding between a SDF and a bearer for UE initiated resource requests.

The bearer binding mechanism associates the PCC Rule with the EPS bearer to carry the service data flow. The association shall:

- cause the downlink part of the service data flow to be directed to the EPS bearer in the association; and
- assume that the UE directs the uplink part of the service data flow to the EPS bearer in the association.

Thus, the detection of the uplink part of a service data flow shall be performed on the EPS bearer over which the downlink packets of the same service data flow is directed to.

NOTE: For GERAN/UTRAN in UE-only mode the detection of the uplink part of the service data flow may be active, in parallel, on any number of EPS bearers.

IPR2024-01041 / IPR2024-01042
Petitioners' Exhibit 1010
Page 000086

When the PDN GW is connected to an SGSN via Gn/Gp (and thus a handover from UTRAN/GERAN to E-UTRAN is possible), the bearer binding in the PCEF shall not combine PCC rules with different ARP values onto the same PDP context. For the UE-only mode (which is based on a UE provided binding) PCC rules with different ARP values shall not be authorized for the same PDP context.

NOTE: This enables a modification of the EPS bearer ARP without impacting the service assignment after a handover to E-UTRAN.

A.4.3.1.4 Policy Control

For 3GPP Access (GTP based) the policy control functionalities should include the following functionality for QoS control (in addition to the functionalities listed in clause 6.1.5):

- Authorization and enforcement of the maximum QoS that is authorized for the total bandwidth usage of non-GBR QCIs at an APN.
- Authorization and enforcement of the maximum QoS allocated to the Default EPS bearer. The Default EPS bearer shall have a non-GBR QCI as defined in TS 23.401 [17], clause 4.7.2.1.

A.4.3.2 Functional Entities

A.4.3.2.1 Policy Control and Charging Rules Function (PCRF)

The PCEF may provide the following information (in addition to the information in clause 6.2.1.1):

- Subscribed APN-AMBR;
- Default EPS Bearer QoS.

The SPR may provide the following information for a subscriber (in addition to the information in clause 6.2.1.1) connecting to a specific PDN:

- Authorized APN-AMBR for 3GPP Access;
- Authorized Default EPS Bearer QoS.

The Authorized APN-AMBR and the Authorized Default EPS Bearer QoS are derived by the PCRF from SPR interaction, according to operator policy.

A.4.3.2.2 Policy and Charging Enforcement Function (PCEF)

In the 3GPP Access (GTP-based) architecture the PCEF enforce QoS Policies as indicated by the PCRF in accordance to what is stated in clause 6.2.2.1 with the following additions:

- Authorized APN-AMBR enforcement. The PCEF shall enforce the authorized APN-AMBR received via the Gx interface for the total bandwidth usage of non-GBR QCI for the APN.
- Authorized Default EPS Bearer QoS Enforcement. The PCEF receives the authorized QoS for the default bearer over Gx interface. The PCEF enforces it which may lead to the upgrade or downgrade of the default EPS Bearer QoS.

Only the GBR per bearer is used for resource reservation (e.g. admission control in the RAN).

The MBR (per PCC rule / per bearer) and the authorized APN-AMBR are used for rate policing.

A.4.3.3 APN related policy information

In the 3GPP Access (GTP-based) architecture the PCRF provides the Authorized APN-AMBR that applies to all IP-CAN sessions for the same UE to the same APN to the PDN GW using the PCC Rule provisioning procedure.

Table A.4.3-3 lists the applicable PCC specific APN related policy information.

IPR2024-01041 / IPR2024-01042
Petitioners' Exhibit 1010
Page 000087

Table A.4.3-3: PCC specific APN related policy information

Attribute	Description	PCRF permitted to modify the attribute	Scope
Authorized APN-AMBR	Defines the APN-AMBR for the total bandwidth usage of non-GBR QCIs at the APN.	Yes	All IP-CAN sessions for the same UE within the same APN

Upon every interaction with the PDN GW, the PCRF may provide the Authorized APN-AMBR. The Authorized APN-AMBR overrides any possible APN-AMBR stored in the PCEF.

A.4.4 PCC Procedures and Flows

A.4.4.1 Introduction

For the 3GPP Access (GTP-based), an IP-CAN session is established by the Create Default Bearer message. The IP-CAN session is terminated when the last EPS bearer of the IP-CAN session is disconnected.

From the network scenarios listed in clause 7.1, the Case 1 (no Gateway Control Session) applies.

A.4.4.2 IP-CAN Session Establishment

In the case of IP-CAN Session Establishment (described in clause 7.2), the PCEF provides to PCRF (in addition to the parameters described in clause 7.2): the User Location Information, Serving Network, Serving-GW address and RAT type.

The PCRF includes, in the IP-CAN Session Establishment Ack, PCC Rules with QCI and ARP matching the Authorized Default EPS Bearer QoS, Authorized APN-AMBR and Authorized Default EPS Bearer QoS. If bearer establishment mode is UE/NW, the PCRF may also include PCC Rules requiring a QCI and ARP different from the Default Bearer QoS and for which NW mode applies.

A.4.4.3 GW(PCEF) initiated IP-CAN Session termination

The GW(PCEF) initiated IP-CAN Session termination procedure (described in clause 7.3.2) has no 3GPP specific information.

A.4.4.4 IP-CAN Session Modification

A.4.4.4.1 IP-CAN Session Modification; GW(PCEF) initiated

For IP-CAN session modification (described in clause 7.4.1) the PCEF includes the modification of any of the 3GPP specific information listed in clause A.4.4.2.

The PCRF may provide the following parameters in the Acknowledgement of the IP-CAN Session Modification to the PDN GW (in addition to the parameters in clause 7.4.1): Authorized APN-AMBR, Authorized Default EPS Bearer QoS.

A.4.4.4.2 IP-CAN Session Modification; PCRF initiated

The PCRF may provide the following parameters in the Policy and Charging Rule Provision to the PDN GW (in addition to the parameters in clause 7.4.2): Authorized APN-AMBR, Authorized Default EPS Bearer QoS.

IPR2024-01041 / IPR2024-01042
Petitioners' Exhibit 1010
Page 000088

A.5 3GPP Accesses (GERAN/UTRAN/E-UTRAN) - PMIP-based EPC

A.5.0 General

For 3GPP Access (PMIP-based), architecture details are described in TS 23.402 [18].

When PMIP-based S5/S8 has been deployed, the IP-CAN-specific parameter exchange occurs by means of IP-CAN Session Modification messages including the necessary information.

A.5.1 High Level Requirements

A.5.1.0 General

The same requirements as in clause A.4.1 apply for 3GPP Access (PMIP-based).

A.5.1.1 QoS control

For 3GPP Access (PMIP based) the same requirements as defined in clause A.4.1.2 apply.

A.5.2 Architectural Model and Reference Points

A.5.2.1 Reference architecture

In the 3GPP Access (PMIP-based) architecture, see TS 23.402 [18],

- the Policy and Charging Enforcement Function is allocated to the PDN GW;
- the Bearer Binding and Event Reporting Function (BBERF) is allocated to the Serving GW.

The Gxx applies and corresponds to the Gxc, as defined in TS 23.402 [18]. One Gateway Control Session corresponds to one IP-CAN session.

A.5.3 Functional Description

A.5.3.1 Overall Description

A.5.3.1.1 Binding mechanism

The same considerations as in clause A.4.3.1.3 apply with the following modifications:

- For the 3GPP Access (PMIP-based) the Bearer binding is performed by the BBERF.

A.5.3.1.2 Credit management

For 3GPP Access (PMIP-based EPC) the same credit re-authorisation triggers as defined in table A.4.3-1 apply.

A.5.3.1.3 Event triggers

For 3GPP Access (PMIP-based EPC) the same event triggers as defined in table A.4.3-2 apply.

IPR2024-01041 / IPR2024-01042
Petitioners' Exhibit 1010
Page 000089

A.5.3.2 Functional Entities

A.5.3.2.1 Policy Control and Charging Rules Function (PCRF)

For 3GPP Access (PMIP based) the same requirements as defined in clause A.4.3.2.1 apply with the following modification:

- Default EPS Bearer QoS is provided by the BBERF.

A.5.3.2.2 Policy and Charging Enforcement Function (PCEF)

For 3GPP Access (PMIP based) the same requirements as defined in clause A.4.3.2.2 apply with the following modification:

- For the 3GPP Access (PMIP-based) the enforcement of the Authorized Default EPS Bearer QoS is not performed by the PCEF.

A.5.3.2.3 Bearer Binding and Event Reporting Function (BBERF)

In the 3GPP Access (PMIP-based) the BBERF enforces QoS Policies as indicated by the PCRF in accordance to what is stated in clause 6.2.7.3 with the following additions:

- Authorized Default EPS Bearer QoS Enforcement. The BBERF receives the authorized QoS for the default bearer over Gxx interface. The BBERF enforces it which may lead to the upgrade or downgrade of the default EPS Bearer QoS.

A.5.3.3 Void

A.5.3.4 APN related policy information

For 3GPP Access (PMIP based) the same requirements as defined in clause A.4.3.3 apply.

A.5.4 PCC Procedures and Flows

A.5.4.1 Introduction

For the 3GPP Access (PMIP-based), the IP-CAN session is established by the Proxy Binding Update message to the PDN-GW. The IP-CAN session is terminated when the PMIP session is terminated.

From the network scenarios listed in clause 7.1, the Case 2b applies.

A.5.4.2 Gateway Control Session Establishment

For the Gateway Control Session Establishment Procedure (see clause 7.7.1), the Serving GW includes the following additional information in the Gateway Control Session Establishment message (in addition to the parameters described in clause 7.7.1): User Location Information, Serving-GW address, Serving Network, RAT Type, Default EPS Bearer QoS and if available the APN-AMBR are provided to the PCRF.

The PCRF includes, in the Acknowledge Gateway Control Session Establishment (in addition to the parameters described in clause 7.7.1): QoS Rules with QCI and ARP matching the Default EPS Bearer QoS. If the bearer establishment mode is UE/NW, the PCRF may also include QoS Rules requiring a QCI and ARP different from the Default EPS Bearer QoS and for which NW mode applies.

In support of PDP Context Activation procedures over S4, the BBERF must indicate various session parameters, especially the BCM, to the PCRF. The BBERF receives a BCM in the response from the PCRF.

IPR2024-01041 / IPR2024-01042
Petitioners' Exhibit 1010
Page 000090

The PCRF may provide the following parameters in the Acknowledgement of the Gateway Control Session Establishment to the Serving GW (in addition to the parameters described in clause 7.7.1): Authorized APN-AMBR, Authorized Default EPS Bearer QoS.

A.5.4.3 Gateway Control and QoS Rules Request

In the case of Gateway Control and QoS Rules Request (described in clause 7.7.3) the BBERF includes the modification of any the 3GPP specific information listed in clause A.5.4.2.

When a change of RAT without S-GW relocation occurs, the BBERF signals the RAT type change as a parameter in an event report sent from the BBERF to the PCRF. An event report is the then sent, indicating the RAT type change, from the PCRF to the PCEF.

When Secondary PDP Context Activation occurs, the S4 SGSN performs a Request Bearer Resource Allocation procedure with the Serving GW. The Serving GW supplies the parameters required by the PCEF to properly handle the allocation of resources. These parameters are sent from the BBERF (Serving GW) to the PCRF for further processing when a PMIP-based S5/S8 is deployed.

The PCRF may provide the following parameters in the Acknowledgement of the Gateway Control and QoS Rules Request to the Serving GW (in addition to the parameters described in clause 7.7.3): Authorized APN-AMBR, Authorized Default EPS Bearer QoS.

A.5.4.4 Gateway Control and QoS Rules Provisioning

In the case of Gateway Control and QoS Rules Provisioning (described in clause 7.7.4) the PCRF may provide the following parameters (in addition to the parameters described in clause 7.7.4) to the Serving GW: Authorized APN-AMBR, Authorized Default EPS Bearer QoS.

A.5.4.5 IP-CAN Session Establishment

The PCRF may provide the following parameters in the Acknowledgement of the IP-CAN Session Establishment to the PDN GW (in addition to the parameters in clause 7.2): Authorized APN-AMBR.

A.5.4.6 IP-CAN Session Modification

A.5.4.6.1 IP-CAN Session Modification; GW(PCEF) initiated

The PCRF may provide the following parameters in the Acknowledgement of the IP-CAN Session Modification to the PDN GW (in addition to the parameters in clause 7.4.1): Authorized APN-AMBR.

A.5.4.6.2 IP-CAN Session Modification; PCRF initiated

The PCRF may provide the following parameters in the Policy and Charging Rule Provision to the PDN GW (in addition to the parameters in clause 7.4.2): Authorized APN-AMBR.

A.5.4.6.3 IP-CAN Session Modification; GW(BBERF) initiated

The PCRF may provide the following parameters in the Acknowledgement of the IP-CAN Session Modification to the PDN GW (in addition to the parameters in clause 7.4.3): Authorized APN-AMBR.

IPR2024-01041 / IPR2024-01042
Petitioners' Exhibit 1010
Page 000091

Annex B (informative): Void

IPR2024-01041 / IPR2024-01042
Petitioners' Exhibit 1010
Page 000092

Annex C (informative): Void

IPR2024-01041 / IPR2024-01042
Petitioners' Exhibit 1010
Page 000093

Annex D (informative): Access specific aspects (Non-3GPP)

D.1 DOCSIS IP-CAN

D.1.1 General

In the DOCSIS IP-CAN, each UE is connected to the network via a Cable Modem (CM) which is connected through a Hybrid Fibre Coax (HFC) access network to a Cable Modem Termination System (CMTS). Though the UE and CM may or may not be embedded within the same physical package, they remain separate logical devices. One or more UEs may subtend a single CM. Because the CMTS provides the IP connectivity and traffic scheduling and manages quality of service for the CM and the UEs which subtend it, the CMTS fulfils the role of PCEF for the DOCSIS IP-CAN. In the DOCSIS IP-CAN, the Application Manager (AM) and the Policy Server (PS) fulfil the role of the PCRF.

When accessing resources via a DOCSIS IP-CAN, the Rx interface can be used to request resources. The communication between the AM and PS and the PS and CMTS uses the PKT-MM-2 interface which is based on COPS and defined in J.179. The remainder of this clause documents the mapping of PCC terminology to the DOCSIS IP-CAN and how the DOCSIS IP-CAN realizes the defined PCC functionality. This clause also establishes the requirements of the Rx interface as it is used for the DOCSIS IP-CAN.

The PKT-MM-2 interface is shown here for information to illustrate the organization of the DOCSIS IP-CAN. References that specify the PKT-MM-2 interface do not constitute normative requirements for the 3GPP architecture. The DOCSIS IP-CAN does not intend to pose any new normative requirements for the Gx interface.

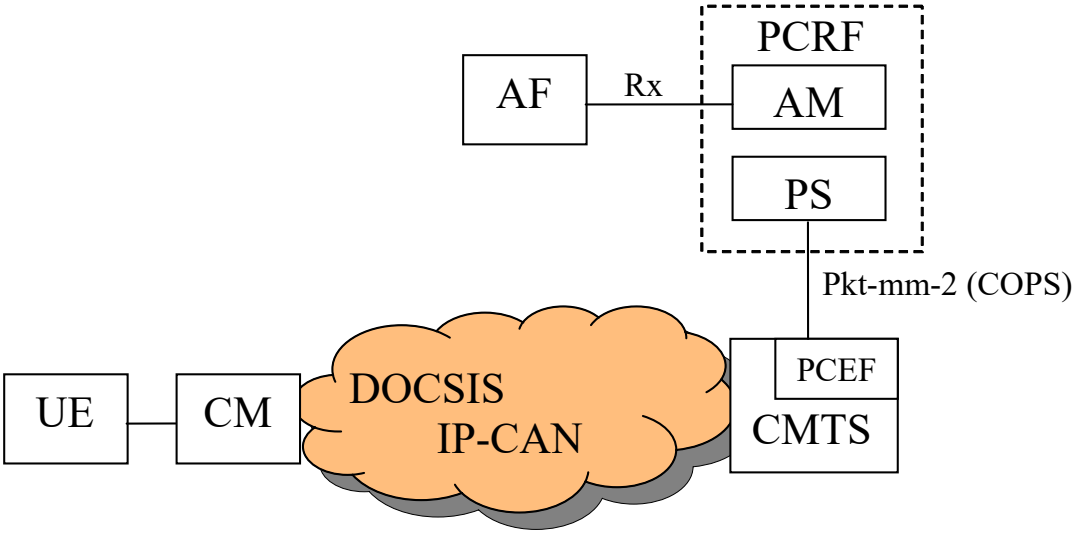

Figure D.1.1: DOCSIS IP-CAN

D.1.1 High level requirements

D.1.1.1 General

The DOCSIS IP-CAN employs for an IP-CAN session, the concept of a DOCSIS registration.

The DOCSIS IP-CAN employs for an IP-CAN bearer, the concept of a DOCSIS service flow in order to provide an information path between the UE and the CMTS. Note that DOCSIS service flows are unidirectional, either upstream (toward the CMTS) or downstream (toward the CM). When a CM is registered in the DOCSIS IP-CAN, it is assigned a unique IP Address and separate primary service flows are created for both the upstream and downstream direction

IPR2024-01041 / IPR2024-01042
Petitioners' Exhibit 1010
Page 000094

These primary service flows are typically given best effort scheduling and are used to carry all IP traffic through the CM for which a more specific service flow has not been created. When a UE is registered in the DOCSIS IP-CAN, it is assigned its own IP Address and is identified by its MAC address. A UE does not have a service flow assigned to it as a result of registration; rather it is associated with the primary service flows of the CM through which it is attached to the network. Additional bearers for the UE are created dynamically as required to provide appropriate QoS for service flows.

Bearer creation is triggered when media descriptors (Media Type and Format) for the SIP session are sent from the AF to the AM over the Rx interface. The AM translates the media descriptors into a QoS request for a DOCSIS service flow. The AM then forwards the QoS request towards the bearer enforcement point using the PKT-MM-2 interface. The PKT-MM-2 interface is not a 3GPP reference point, Specifications that detail the PKT-MM-2 interface do not impose normative requirements on the 3GPP architecture.

The following figure provides a graphical representation of the DOCSIS IP-CAN and how it maps into the generic PCC terminology.

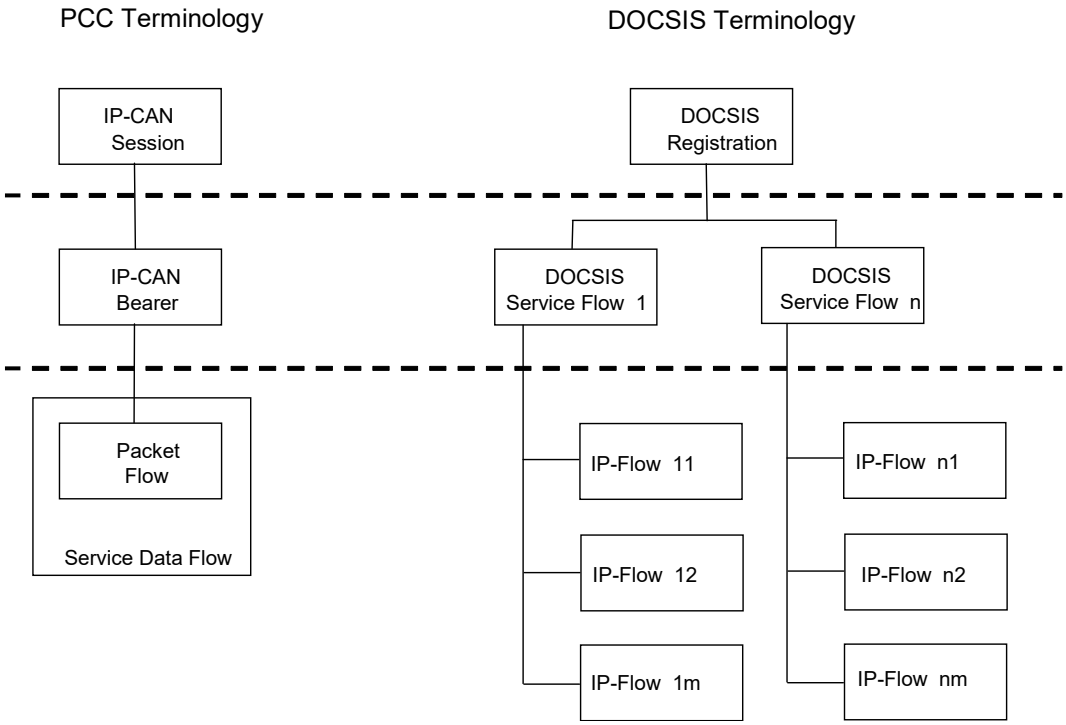

Figure D.1.2: PCC to DOCSIS terminology mapping

The DOCSIS IP-CAN defines an IP-Flow to be a unidirectional sequence of packets identified by OSI Layer 3 and Layer 4 header information. This information includes source/destination IP addresses, source/destination port numbers, protocol ID. Multiple Multimedia streams may be carried in a single IP Flow.

In a DOCSIS IP-CAN, there is no equivalent concept as a service data flow. Further a DOCSIS service flow is uni-directional and each service flow is an aggregation of the QoS needs for all the IP-Flows which make up the service flow. As such, the QoS enforcement is done at the service flow level not at the IP-Flow level.

D.1.1.2 Charging related requirements

D.1.1.3 Policy control requirements

IPR2024-01041 / IPR2024-01042
Petitioners' Exhibit 1010
Page 000095

D.1.2 Architecture model and reference points

D.1.2.1 Reference points

D.1.2.1.1 Rx reference point

D.1.2.1.2 Gx reference point

D.1.2.1.3 Sp reference point

Editor's note: Requirements placed on the Sp interface are FFS.

D.1.3 Functional description

D.1.3.1 Overall description

The DOSCIS IP-CAN employs for an IP-CAN bearer, the concept of a DOCSIS service flow in order to provide an information path between the UE and the CMTS. When a Cable Modem is registered in the DOCSIS IP-CAN, primary upstream and downstream service flows are created.

When a UE is registered in the DOCSIS IP-CAN it is associated with the primary service flows of the cable modem through which it is attached to the network. Based on session information provided by the AF using the Rx reference point, the Application Manager will determine QoS requirements for each IP flow. IP flows which do not require special quality of service treatment may be carried over the primary service flows. For other IP flows which require specific QoS treatment, the Policy Server requests the CMTS to admit the flows using the pkt-mm-2 interface providing detailed information of the QoS requirements. Provided that resources are available, the CMTS will create additional bearers dynamically and push the appropriate traffic filters to the cable modem.

D.1.3.1.1 Binding mechanism

In the DOCSIS IP-CAN, the binding mechanism is achieved through the use of traffic Classifiers. These Classifiers filter traffic destined to a UE behind a Cable Modem or sourced from a UE behind a Cable Modem, to a particular DOCSIS service flow. DOCSIS Classifiers contain the following attributes which can be used to filter IP traffic:

- IP Type of Service – Range and Mask;
- IP Protocol;
- IP Source Address;
- IP Source Mask;
- IP Destination Address;
- IP Destination Mask;
- TCP/UDP Source Port Start;
- TCP/UDP Source Port End;
- TCP/UDP Destination Port Start;
- TCP/UDP Destination Port End.

The Classifier(s) which are used for a particular DOCSIS service flow are communicated to the CMTS by the Policy Server (on behalf of the Application Manager) via the pkt-mm-2 interface. The Application Manager will specify the

IPR2024-01041 / IPR2024-01042
Petitioners' Exhibit 1010
Page 000096

QoS requirements for the IP flow, the direction of the IP flow, and the Classifier(s) which are to be used for the DOCSIS service flow serving the IP flow.

When a session is no longer in use, the Application Manager communicates to the CMTS to tear down the resources associated with the session. Based on this communication, the CMTS will remove the DOCSIS service flow(s) and any Classifier(s) associated with the service flow(s), and inform the Cable Modem of the removal. Traffic which previously matched the removed Classifier(s) will now be placed on either the upstream or downstream primary DOCSIS service flow, depending on the direction of the traffic.

D.1.3.2 Functional entities

D.1.3.2.1 Policy Control and Charging Rules Function (PCRF)

In the DOCSIS IP-CAN, the Application Manager (AM) and the Policy Server (PS) fulfil the role of the PCRF.

The AM receives media descriptors (Media Type and Format) from the AF for SIP sessions and maps the QoS needs of the session to a FlowSpec, The FlowSpec is a layer 2 independent representation of the bandwidth and QoS requirements for the flow derived from the media descriptors using a well defined algorithm. The AM and PS provide network resource control in the DOCSIS IP-CAN by managing the CMTS using the PacketCable Multimedia interface pkt-mm-2.

The AM and PS map IP flows to DOCSIS service flows in accordance with the operator's policies and based on the media format information provided by the AF.

D.1.3.2.1.1 Input for PCC decisions

The AM accepts any of the following input as a basis for decisions on PCC rule operations:

- Per IP-CAN session (e.g.: UE IP address);
- Requested QoS, media format, priority indicator.

The SPR may provide the following information:

- Subscribers maximum allowed QoS resources.

Subscriber's maximum allowed bit rate for upstream and downstream.

D.1.3.2.2 Policy and Charging Enforcement Function (PCEF)

The CMTS provides PCEF equivalent functionality within the DOCSIS IP-CAN. The CMTS creates, modifies, and deletes DOCSIS service flows upon request of the Policy Server. The CMTS receives requests from the Policy Server over the pkt-mm-2 interface.

D.1.3.2.3 Application Function (AF)

D.1.3.3 Policy and charging control rule

D.1.3.3.1 General

D.1.3.3.2 Policy and charging control rule operations

IPR2024-01041 / IPR2024-01042
Petitioners' Exhibit 1010
Page 000097

D.2 WiMAX IP-CAN

In the WiMAX IP-CAN, the UE (also referenced as Mobile Station or MS in IEEE 802.16 standards) connects to the WiMAX Access Service Network (ASN). The ASN logically communicates with a Connectivity Service Network (CSN) which is a collection of core networking functions (e.g. Mobile IP HA, AAA Server, DHCP, DNS etc.). The ASN manages traffic admission and scheduling, enforces QoS for an authorized UE and performs accounting functions for the UE (per session, flow, or UE). WiMAX PCEF is part of WiMAX IP-CAN and is to be defined by WiMAX Forum [15]. WiMAX PCEF terminates the Gx reference point from the PCRF and may be a distributed enforcement architecture.

The PCC functional mapping to WiMAX IP-CAN is shown in the following figure where PCC Gx and Rx are applied.

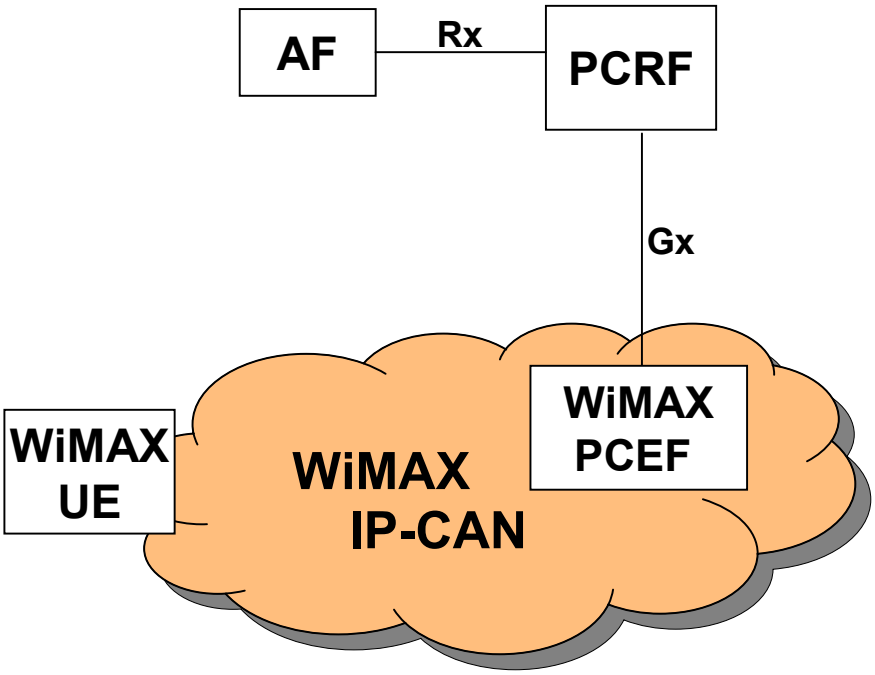

Figure D.2.1: WiMAX IP-CAN and 3GPP PCC

D.2.1 High level requirements

D.2.1.1 General

No new requirements have been identified.

D.2.1.2 Charging related requirements

No new requirements have been identified.

D.2.1.3 Policy control requirements

No new requirements have been identified.

IPR2024-01041 / IPR2024-01042
Petitioners' Exhibit 1010
Page 000098

D.2.2 Architecture model and reference points

D.2.2.1 Reference points

D.2.2.1.1 Rx reference point

WiMAX IP-CAN imposes no new requirements to the Rx reference point.

D.2.2.1.2 Gx reference point

WiMAX IP-CAN imposes no new requirements to the Gx reference point other than WiMAX specific values for existing Gx parameters (e.g. RAT type) as described in [15].

D.2.2.1.3 Sp reference point

WiMAX IP-CAN imposes no new requirements to the Sp reference point.

D.2.3 Functional description

D.2.3.1 Overall description

The WiMAX IP-CAN employs for an IP-CAN bearer, the concept of a WiMAX service flow, in order to provide a data path between the UE and the WiMAX CSN via the ASN. When a UE is registered in the WiMAX IP-CAN, it is associated with one or more WiMAX service flows. Based on session information provided by the AF via the Rx reference point, the PCRF determines the QoS requirements for each service by constructing PCC rules. The PCRF requests the WiMAX IP-CAN via Gx interface to enforce the authorized PCC rules on the WiMAX service flows. The PCEF function in the WiMAX IP-CAN enforces the PCC rules received from the PCRF. Provided that resources are available, the ASN creates and configures logical bearers and enforces creation of appropriate traffic classes associated with service flows compliant with IEEE 802.16 standards for the air interface and IP-CAN bearer capabilities in the ASN (e.g. DiffServ).

D.2.3.1.1 Binding mechanism

D.2.3.1.2 Credit management

D.2.3.1.3 Event triggers

D.2.3.2 Functional entities

D.2.3.2.1 Policy Control and Charging Rules Function (PCRF)

The 3GPP PCRF is used for the WiMAX IP-CAN. The PCRF interacts with WiMAX IP-CAN using 3GPP Gx reference point.

IPR2024-01041 / IPR2024-01042
Petitioners' Exhibit 1010
Page 000099

D.2.3.2.2 Policy and Charging Enforcement Function (PCEF)

For WiMAX IP-CAN, PCEF functions may be distributed. It additionally:

- Terminates the Gx reference point from PCRF and may act as a proxy for the PCRF.
- Handles the enforcement function relocation in WiMAX IP-CAN in a way that is transparent to the PCRF.

D.2.3.2.3 Application Function (AF)

WiMAX IP-CAN imposes no requirements to the AF functionalities.

D.2.3.3 Policy and charging control rule

D.2.3.3.1 General

D.2.3.3.1 Policy and charging control rule operations

IPR2024-01041 / IPR2024-01042
Petitioners' Exhibit 1010
Page 000100

Annex E (informative): Reference Scenario for the evolution of QoS control

Editor's note: The content of this annex is copied from Release 7 TS 23.203. It is kept for information only with the intention to remove it when appropriate.

It is expected that following the successful standardisation of a network based QoS control mechanism in 3GPP, this functionality would start to appear in commercial networks in subsequent years. The specific time frame for this deployment will depend on many market factors, however for the purposes of the evaluation of this transitory phase the arbitrary timeframe of 2008-2010 is used purely as a point of reference.

In the period leading up to the availability of network based QoS control, it is anticipated that there will be a steady increase in the number of applications which use UE based QoS control to establish the necessary higher QoS bearers.

After network based QoS control becomes available, new applications may be deployed which make use of this model and older applications may be upgraded to make use of this new approach to QoS. However due to the population of legacy terminals and the need to manage migration of applications the UE based QoS control model will continue to be used in coexistence with the network based QoS control model. It is one possibility that over time the use of the UE based model will plateau and finally start to decrease. This projected usage of the two QoS models is shown in figure E.1.

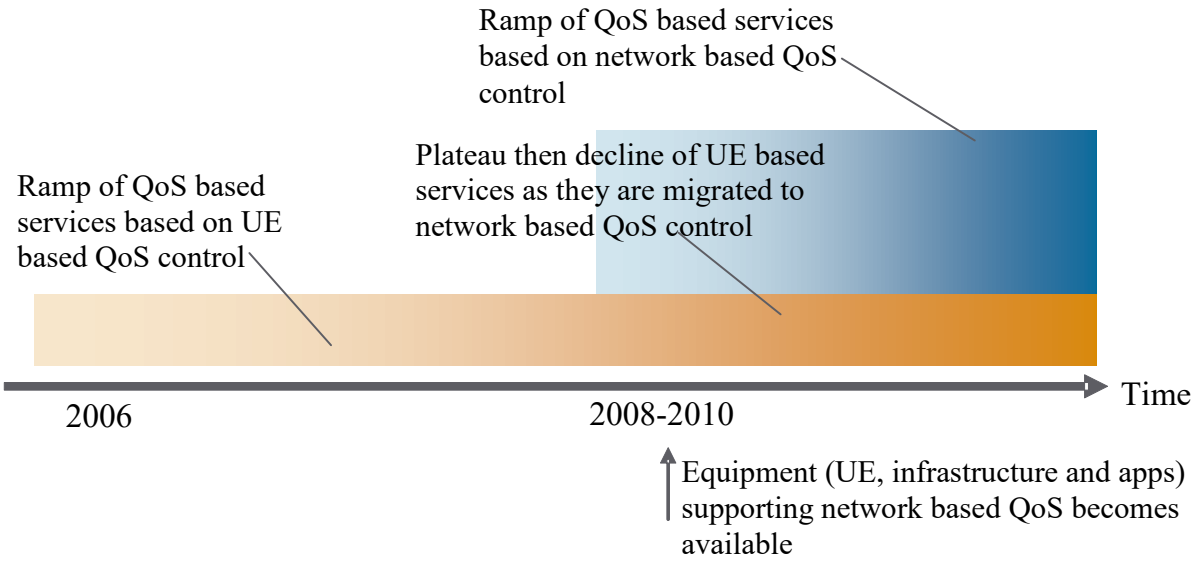

Figure E.1: Evolution Scenario for QoS Control

It can there be concluded that there is a requirement that 3GPP standards, in particular the GPRS and PCC specifications, efficiently facilitate the use of both the UE based and Networked based control of QoS to ensure a smooth evolution, following the introduction of Network based control of QoS.

IPR2024-01041 / IPR2024-01042
Petitioners' Exhibit 1010
Page 000101

Annex F (informative): Co-existence between SBLP based (Release 6) and PCC based (Release 7 and later) policy control

Editor's note: The content of this annex is copied from Release 7 TS 23.203. It is kept for information only with the intention to remove it when appropriate.

F.1 General

TS 23.203 specifies the overall stage 2 level functionality for Policy and Charging Control that encompasses the following high level functions for IP-CANs (e.g. GPRS, I WLAN, Fixed Broadband, etc.):

- Flow Based Charging, including charging control and online credit control to allow for more granularity for end-user charging, accounting and online credit control;
- Enhanced Policy Control (e.g. gating control, QoS control, etc.) to allow the operator to perform service based QoS policy control;

TS 23.203 is an evolution of Flow Based Charging (i.e. FBC) as defined in TS 23.125 [7] and a replacement for Service Based Local Policies (i.e. SBLP) as defined in TS 23.207 [5]. From Release 7 onwards PCC supersedes FBC and replaces the SBLP architecture and functionality.

The purpose of this annex is to describe issues related to co-existence between Release 6 UEs/Networks with Release 7 UEs/Networks, in particular the role of the authorization token.

The following principles govern the co-existence between Release 6 SBLP and Release 7 PCC:

- Stage 2 specifications do not contain any requirements about which release nodes are allowed to interface with each other. It is assumed that nodes within an architecture belong to the same release.
- The Release 7 PCC architecture does not include any Gq reference point, Go reference point nor PDF (TS 23.207 [5]). Thus, there is no PDF generating any authorization token in the Release 7 PCC architecture.
- If the network employs SBLP, then the UE shall include the authorization token and flow identifier(s) in the secondary PDP context activation request as specified for Release 6. The UE may deduce that the network operates in Release 6 mode if an authorization token is received within AF signalling (SIP/SDP in the case of IMS).
- Alternatively, if there is no support for SBLP at the UE, the UE may decide to activate bearers without returning the authorization token by itself and it is up to the local policy as to whether these bearers are allowed. It should be noted that the return path for the authorization token is in GPRS session management signalling and not within AF SIP signalling (SIP in the case of IMS).

F.2 GPRS network scenario where the UE supports a previous Release

For GPRS, the PCC architecture is deployed on a per APN configuration basis, so that all IP-CAN sessions to that APN will use the Gx reference point for all the policy and charging control. An APN providing IMS services shall be configured to provide P-CSCF destinations to the UE, so that the P-CSCF will operate according to the Release 7 architecture, using the Release 7 Rx reference point for service authorizations. Since the SBLP authorization token is obsolete in the Release 7 architecture a UE connecting to an APN, configured for Release 7, will not receive any authorization token. Should a UE provide authorization token and flow identifiers to a Release 7 network, the GGSN will silently discard the authorization token and flow identifiers.

For the use of a UE in a network configured for a previous release, refer to that release.

IPR2024-01041 / IPR2024-01042
Petitioners' Exhibit 1010
Page 000102

The PCC architecture performs service to GPRS bearer binding as described in clause 6.1.1, without the need for an authorization token.

IPR2024-01041 / IPR2024-01042
Petitioners' Exhibit 1010
Page 000103

Annex G (informative): PCC rule precedence configuration

The precedence information is part of the PCC rule (see clause 6.3.1) and instructs the PCEF in which order the service data flow templates of the active PCC rules needs to be analyzed when an IP packet arrives. This mechanism ensures that the service data flows can be correctly identified even if the service data flow templates contain overlapping service data flow filters.

Within the PCC framework it is possible to use different types of PCC rules for which the service data flow templates may not always be known by the PCRF. Therefore, the PCC rule precedence information needs to be carefully configured to avoid certain situations e.g. a dynamic PCC rule cannot be applied for service data flow detection due to a pre-defined PCC rule not known to the PCRF with overlapping filter information and a higher precedence.

For example, an operator could structure the value range of the precedence information into separate value ranges (in decreasing order) for the different types of PCC rules as follows:

- dynamic PCC rules;
- pre-defined PCC rules known to the PCRF;
- pre-defined PCC rules not known to the PCRF;
- dynamic PCC rules for non-operator controlled services, i.e. those which are generated by the PCRF based on the UE provided traffic mapping information (and which take over the UE provided precedence information).

IPR2024-01041 / IPR2024-01042
Petitioners' Exhibit 1010
Page 000104

Annex H (normative): Access specific aspects (EPC-based Non-3GPP)

Editor's note: This clause is a placeholder for EPC-based non-3GPP accesses. This clause focuses on aspects specific for a given non-3GPP access that terminates Gxa. The generic aspects of Gxa are described in the main body of this specification.

H.1 General

An EPC-based non-3GPP IP-CAN (TS 23.402 [18]), which requires the Gxa for dynamic QoS control, shall include the BBERF. The allocation of a BBERF to a node within the non-3GPP IP-CAN is out of 3GPP scope, unless otherwise specified in this Annex.

H.2 EPC-based cdma2000 HRPD Access

In case of EPC-based cdma2000 HRPD access the BBERF is located in the HRPD Serving Gateway (HSGW) defined in 3GPP2 X.P0057 [20].

The HSGW of an EPC-based cdma2000 HRPD access that supports a Gxa interface shall support all the Gxa procedures defined in this specification.

NOTE 1: If the HSGW does not support the Gxa interface, the HSGW performs QoS enforcement in the HRPD access based on subscription-based QoS policies provided by the 3GPP AAA Server/Proxy during access authentication and/or static QoS policies configured in the HSGW. However, this is out of the scope of this specification.

During the pre-registration phase in case of optimised EUTRAN-to-HRPD handovers, the Serving GW and the HSGW are associated with the IP-CAN session(s) of the UE in the PCRF. The HSGW is the non-primary BBERF.

NOTE 2: The HSGW performs QoS mapping between the QoS parameters exchanged across Gxa interface and the cdma2000 HRPD QoS parameters used within the HRPD access. However, this is out of the scope of this specification.

IPR2024-01041 / IPR2024-01042
Petitioners' Exhibit 1010
Page 000105

Annex I (informative): Void

IPR2024-01041 / IPR2024-01042
Petitioners' Exhibit 1010
Page 000106

Annex J (informative): Standardized QCI characteristics - rationale and principles

The following bullets capture design rationale and principles with respect to standardized QCI characteristics:

- A key advantage of only signalling a single scalar parameter, the QCI, as a "pointer" to standardized characteristics - as opposed to signalling separate parameters for resource type, priority, delay, and loss – is that this simplifies a node implementation.

NOTE 1: TS 23.107 [14] permits the definition of more than 1600 valid GPRS QoS profiles (without considering GBR, MBR, ARP, and Transfer Delay) and this adds unnecessary complexity.

- In general, the rate of congestion related packet drops can not be controlled precisely for Non-GBR traffic. This rate is mainly determined by the current Non-GBR traffic load, the UE's current radio channel quality, and the configuration of user plane packet processing functions (e.g. scheduling, queue management, and rate shaping). That is the reason why services using a Non-GBR QCI should be prepared to experience congestion related packet drops and/or per packet delays that may exceed a given PDB. The discarding (dropping) of packets is expected to be controlled by a queue management function, e.g. based on pre-configured dropping thresholds, and is relevant mainly for Non-GBR QCIs. The discarding (dropping) of packets of an SDF aggregate mapped to a GBR QCI should be considered to be an exception as long as the source sends at a rate smaller than or equal to the SDF aggregate's GBR.

- An operator would choose GBR QCIs for services where the preferred user experience is "service blocking over service dropping", i.e. rather block a service request than risk degraded performance of an already admitted service request. This may be relevant in scenarios where it may not be possible to meet the demand for those services with the dimensioned capacity (e.g. on "new year's eve"). Whether a service is realized based on GBR QCIs or Non-GBR QCIs is therefore an operator policy decision that to a large extent depends on expected traffic load vs. dimensioned capacity. Assuming sufficiently dimensioned capacity any service, both Real Time (RT) and Non Real Time (NRT), can be realized based only on Non-GBR QCIs.

NOTE: The TCP's congestion control algorithm becomes increasingly sensitive to non congestion related packet losses (that occur in addition to congestion related packet drops) as the end-to-end bit rate increases. To fully utilise "EUTRA bit rates" TCP bulk data transfers will require a PLR of less than 10^{-6}.

IPR2024-01041 / IPR2024-01042
Petitioners' Exhibit 1010
Page 000107

Annex K (informative): Limited PCC Deployment

Limited support for policy provisioning occurs in certain deployment scenarios.

If PCC is deployed in the HPLMN but not the VPLMN, dynamic policy provisioning only occurs in the home routed roaming cases if no BBERF is employed, or in the non-roaming scenarios.

In roaming scenarios in which the PCC is deployed in the HPLMN but not the VPLMN, and a GW(BBERF) is used:

- limited policy control is possible when the UE moves from the HPLMN to the VPLMN. In the VPLMN, the UE receives only service according to static policies or according to static subscriber policies, defined outside the PCC framework delivered as described in TS 23.402 [18]; the dynamically allocated resources associated with specific EPS Bearers no longer apply after this transition.
- If a UE moves from the VPLMN to the HPLMN, dedicated resource establishment procedures are used to dynamically allocate the appropriate resources in the HPLMN for EPS bearers.
- PCC may still be employed to provision rules to the PCEF for the purpose of charging on the basis of the IP-CAN session.

When PCC is supported in the VPLMN and not in the HPLMN, dynamic policy may only be provided for the LBO case. As the VPCRF has no access to subscriber policy information from the HPLMN, only static policy will apply. The VPCRF may however interact with the AF in the VPLMN in order to determine dynamic policy for SDFs operating entirely in the VPLMN. This policy will be enforced either in the PCEF or the BBERF in the VPLMN. Bearer binding will occur under control of the VPLMN, either in the GW(BBERF) or in the GW(PCEF) (in the case of GTP-based S5/S8 for 3GPP access).

Annex L (normative): Limited PCC Deployment

In roaming scenarios in which the PCC is deployed in the HPLMN but not the VPLMN, and a GW(BBERF) is used:

- HPCRF and OCS shall detect based on local configuration according to roaming agreements that the event reporting is restricted. The OCS shall not set re/authorization triggers which would require event reporting that can not be generated.

IPR2024-01041 / IPR2024-01042
Petitioners' Exhibit 1010
Page 000108

Annex M (informative): Handling of UE or network responsibility for the resource management of services

For access networks supporting network initiated resource signalling, the network can take over the responsibility for the resource management for a service. This means the network triggers the request for resources when the service is started or modified and triggers the release of the resources when the service is terminated. The UE remains responsible for starting the service or reacting to an incoming service signalling and needs to decide about how to proceed with the service if the desired resources are not available.

As the network initiated resource signalling cannot always be used due to UE, access network, roaming or other restrictions, the default responsibility for the resource management for a service is given to the UE. However, the UE and the PCRF may be configured on a per service basis to make use of the network responsibility for resource management if the current access network allows this, i.e. if network initiated resource signalling is possible. The UE configuration regarding the responsibility for the resource management of a service might be updated by device management.

Regarding the PCC functionality, the main difference between the UE and the network responsibility for resource management is in the PCRF behaviour. When the UE is responsible, the PCRF waits with the authorization and installation of PCC rules until an appropriate resource request arrives. The main criteria for authorizing a PCC rule is a match of the service data flow filter information with the UE provided traffic mapping information, i.e. the UE desire to run this service on the requested resource. The QoS requested by the UE is then aligned with the authorized QoS for the PCC rules that are associated with the resource request by the PCRF.

When the network is responsible for the resource management, the PCRF authorizes PCC rules immediately, i.e. when the IP-CAN session is established and when new service information is received from the AF. The authorized PCC rules are installed afterwards.

IPR2024-01041 / IPR2024-01042
Petitioners' Exhibit 1010
Page 000109

Annex N (informative): Change history

Change history								
Date	**TSG #**	**TSG Doc.**	**CR**	**Rev**	**Cat**	**Subject/Comment**	**Old**	**New**
2007-12	SP-38	SP-070812	0059	2	B	Scope of the new 23.203	7.5.0	8.0.0
2007-12	SP-38	SP-070812	0060	2	B	Proposal of content for TS 23.203	7.5.0	8.0.0
2007-12	SP-38	SP-070812	0061	1	B	PCRF discovery principles	7.5.0	8.0.0
2008-03	SP-39	SP-080107	0062	2	B	Role of the V-PCRF	8.0.0	8.1.0
2008-03	SP-39	SP-080107	0063	1	B	Architecture and functional entities for Rel-8	8.0.0	8.1.0
2008-03	SP-39	SP-080107	0064	1	D	Documentation strategy for incorporating items from 23.401/23.402 into 23.203	8.0.0	8.1.0
2008-03	SP-39	SP-080107	0065	2	F	Rx reference point domain definition	8.0.0	8.1.0
2008-03	SP-39	SP-080107	0066	2	B	Clarification for PCRF Selection	8.0.0	8.1.0
2008-03	SP-39	SP-080107	0094	2	C	Definitions for 23.203	8.0.0	8.1.0
2008-03	SP-39	SP-080107	0095	2	C	PCRF Selection in roaming scenario	8.0.0	8.1.0
2008-03	SP-39	SP-080107	0096	2	C	CR for information storage in DRA	8.0.0	8.1.0
2008-03	SP-39	SP-080107	0105	2	B	Additional Procedures for PCC	8.0.0	8.1.0
2008-03	SP-39	SP-080107	0107	3	C	Tunnelled and untunnelled PCC rules in Release 8	8.0.0	8.1.0
2008-03	SP-39	SP-080106	0113	1	A	Clarification for PCRF initiated IP-CAN session termination	8.0.0	8.1.0
2008-03	SP-39	SP-080107	0115	-	F	Reference points renaming for 23.203	8.0.0	8.1.0
2008-03	-	-	-	-	-	Correction by MCC of Figure 5.1.2 (missing PCRF box) added by CR0063R1	8.1.0	8.1.1
2008-06	SP-40	SP-080372	0103	8	B	Generic IP-CAN session termination procedure for EPS	8.1.1	8.2.0
2008-06	SP-40	SP-080373	0117	5	C	Multiple leg linking at the PCRF	8.1.1	8.2.0
2008-06	SP-40	SP-080372	0118	4	C	Alignment of PCC functionalities to EPS principles in terms of bearer binding, policy enforcement, usage of PCC and QoS rules, and BBERF/PCEF coexistence	8.1.1	8.2.0
2008-06	SP-40	SP-080373	0121	4	B	Modify PCC Procedures	8.1.1	8.2.0
2008-06	SP-40	SP-080373	0125	2	B	Inclusion of Annex C from 23.401	8.1.1	8.2.0
2008-06	SP-40	SP-080372	0126	6	B	Generic IP-CAN session modification procedure for EPS	8.1.1	8.2.0
2008-06	SP-40	SP-080373	0127	2	B	QoS rule definition and procedures	8.1.1	8.2.0
2008-06	SP-40	SP-080373	0128	3	B	Online charging session per IP-CAN session	8.1.1	8.2.0
2008-06	SP-40	SP-080373	0129	2	B	Notification of IP-CAN Type Change	8.1.1	8.2.0
2008-06	SP-40	SP-080372	0130	5	B	Handling of event triggers and credit re-authorization triggers	8.1.1	8.2.0
2008-06	SP-40	SP-080369	0135	1	A	Binding of PCC rules having no AF session	8.1.1	8.2.0
2008-06	SP-40	SP-080373	0139	6	B	Role of V-PCRF and H-PCRF	8.1.1	8.2.0
2008-06	SP-40	SP-080373	0141	-	C	PCRF Bearer binding	8.1.1	8.2.0
2008-06	SP-40	SP-080372	0142	2	C	Clean up of architecture related FFS in 23.203	8.1.1	8.2.0
2008-06	SP-40	SP-080372	0143	1	F	Clean up in clause Functional entities	8.1.1	8.2.0
2008-06	SP-40	SP-080372	0144	3	B	Additions to Annex A.4	8.1.1	8.2.0
2008-06	SP-40	SP-080372	0145	3	B	Additions to Annex A.5	8.1.1	8.2.0
2008-06	SP-40	SP-080372	0146	2	B	ARP in the PCC Rule	8.1.1	8.2.0
2008-06	SP-40	SP-080373	0148	1	B	Inclusion of Annex C from 23.401	8.1.1	8.2.0
2008-06	SP-40	SP-080369	0151	1	A	Termination actions	8.1.1	8.2.0
2008-06	SP-40	SP-080369	0153	1	A	Uplink TFT packet filters	8.1.1	8.2.0
2008-06	SP-40	SP-080369	0155	2	A	Forwarding of information to the AF	8.1.1	8.2.0
2008-06	SP-40	SP-080373	0156	2	F	Input from AF for PCC decisions	8.1.1	8.2.0
2008-06	SP-40	SP-080390	0163	1	A	Changes due to bearer mapping	8.1.1	8.2.0
2008-06	SP-40	SP-080369	0164	1	B	Limited PCC Deployment	8.1.1	8.2.0
2008-06	SP-40	SP-080369	0165	-	C	Credit denied to AF	8.1.1	8.2.0
2008-09	SP-41	SP-080583	0166	-	F	Clean up of roaming related aspects	8.2.0	8.3.0
2008-09	SP-41	SP-080583	0167	2	F	Correction to credit re-authorization functionality when Gxx is used	8.2.0	8.3.0
2008-09	SP-41	SP-080583	0168	1	F	Refinement of Annex A.4 and Annex A.5	8.2.0	8.3.0
2008-09	SP-41	SP-080583	0169	1	F	Correction to IP-CAN Session Establishment Procedure	8.2.0	8.3.0
2008-09	SP-41	SP-080579	0171	-	A	Service Information Request from PCRF	8.2.0	8.3.0
2008-09	SP-41	SP-080583	0178	2	F	Aligning Off-path Text with 23.402	8.2.0	8.3.0
2008-09	SP-41	SP-080583	0182	7	F	The revise of the signalling flow about mobility protocol tunnelling encapsulation header information	8.2.0	8.3.0
2008-09	SP-41	SP-080605	0184	1	F	HRPD specific content for Annex H	8.2.0	8.3.0
2008-09	SP-41	SP-080583	0185	2	F	Clarifications on UE/NW-initiated resource allocation	8.2.0	8.3.0
2008-09	SP-41	SP-080583	0187	-	D	Removal of Annex I	8.2.0	8.3.0
2008-09	SP-41	SP-080583	0188	1	F	Cleanup for binding mechanisms	8.2.0	8.3.0
2008-09	SP-41	SP-080583	0189	1	F	Clarification on input for PCC decisions	8.2.0	8.3.0
2008-09	SP-41	SP-080584	0190	1	F	Clarification on visited access procedures	8.2.0	8.3.0

IPR2024-01041 / IPR2024-01042
Petitioners' Exhibit 1010
Page 000110

Change history								
Date	**TSG #**	**TSG Doc.**	**CR**	**Rev**	**Cat**	**Subject/Comment**	**Old**	**New**
2008-09	SP-41	SP-080584	0192	-	F	Clarification on bearer control mode handling	8.2.0	8.3.0
2008-09	SP-41	SP-080579	0196	3	A	Missing Ack in GW(PCEF) initiated IP-CAN Session Modification	8.2.0	8.3.0
2008-09	SP-41	SP-080584	0197	2	F	Addition of access system interactions to some GW control session procedures	8.2.0	8.3.0
2008-09	SP-41	SP-080584	0198	3	F	Gateway Control and QoS Rules Request	8.2.0	8.3.0
2008-09	SP-41	SP-080584	0199	2	F	Gateway Control Session Establishment	8.2.0	8.3.0
2008-09	SP-41	SP-080584	0200	2	F	Correction to PCRF informs the requested trigger from PCEF in the roaming scenarios where the V-PLMN does not configure PCC	8.2.0	8.3.0
2008-09	SP-41	SP-080584	0203	1	F	Rel-7/Rel-8 QCI Alignment	8.2.0	8.3.0
2008-09	SP-41	SP-080584	0204	2	F	Clarifications in the usage of the APN-AMBR	8.2.0	8.3.0
2008-09	SP-41	SP-080584	0205	1	F	Clarifications to Gxx/Gx leg binding	8.2.0	8.3.0
2008-09	SP-41	SP-080579	0211	3	A	Event Trigger supporting Time of Day based PCC rule state change	8.2.0	8.3.0
2008-09	SP-41	SP-080584	0212	3	F	Clarification on Gateway Control Session	8.2.0	8.3.0
2008-09	-	-	-	-	-	MCC editorial corrections to table 6.1.7 (corrected implementation of CR0203R1)	8.3.0	8.3.1
2008-12	SP-42	SP-080815	0116	8	B	Handling of Multiple BBERFs	8.3.1	8.4.0
2008-12	SP-42	SP-080811	0180	3	A	QoS Authorization for incomplete service information	8.3.1	8.4.0
2008-12	SP-42	SP-080815	0181	4	F	Allocation/Retention Priority details	8.3.1	8.4.0
2008-12	SP-42	SP-080814	0191	3	F	Clarification on QoS control at the BBERF	8.3.1	8.4.0
2008-12	SP-42	SP-080814	0207	3	F	Cleanup of text on linking PCRFs and identifying PCC sessions	8.3.1	8.4.0
2008-12	SP-42	SP-080815	0215	1	F	Event triggers for QoS change and UE IP address change	8.3.1	8.4.0
2008-12	SP-42	SP-080815	0216	1	F	Change of default EPS Bearer QoS	8.3.1	8.4.0
2008-12	SP-42	SP-080815	0217	1	F	Removing the requirements on messages	8.3.1	8.4.0
2008-12	SP-42	SP-080814	0218	2	F	Clarification on session linking for roaming scenarios	8.3.1	8.4.0
2008-12	SP-42	SP-080814	0221	1	F	Correction on PDNs supported by a PCRF	8.3.1	8.4.0
2008-12	SP-42	SP-080814	0223	1	F	Clarification of resource setup in target access during HO	8.3.1	8.4.0
2008-12	SP-42	SP-080815	0227	1	F	Reporting for PMIP based EPC	8.3.1	8.4.0
2008-12	SP-42	SP-080814	0228	2	F	Editorial clarification on PCEF initiated IP-CAN Session Modification	8.3.1	8.4.0
2008-12	SP-42	SP-080814	0229	-	F	Correction to the IP-CAN Session Establishment procedure	8.3.1	8.4.0
2008-12	SP-42	SP-080815	0231	-	F	Event triggers provision over Gxx	8.3.1	8.4.0
2008-12	SP-42	SP-080815	0235	3	F	Addition of subscription information in GW control session establishment	8.3.1	8.4.0
2008-12	SP-42	SP-080834	0236	-	F	Correction to the clause of session binding	8.3.1	8.4.0
2008-12	SP-42	SP-080814	0237	-	F	Clarifications to mandatory event triggers for GPRS	8.3.1	8.4.0
2008-12	SP-42	SP-080815	0238	1	F	MBR per QCI	8.3.1	8.4.0
2008-12	SP-42	SP-080815	0242	2	F	Avoid occurrence of race condition for bearer establishment modes	8.3.1	8.4.0
2008-12	SP-42	SP-080815	0245	2	F	Alignment of TFT and PCC packet filters	8.3.1	8.4.0
2008-12	SP-42	SP-080811	0246	2	F	Event reporting for PMIP based EPC with PCEF in visited network and locally terminated Gxx interaction	8.3.1	8.4.0
2008-12	SP-42	SP-080811	0247	1	F	PCC rule authorization for UE provided traffic mapping information	8.3.1	8.4.0

IPR2024-01041 / IPR2024-01042
Petitioners' Exhibit 1010
Page 000111