US007295809B2

(12) **United States Patent**
Moore

(10) **Patent No.: US 7,295,809 B2**
(45) **Date of Patent: Nov. 13, 2007**

(54) **PORTABLE AUDIO PLAYBACK DEVICE WITH BASS ENHANCEMENT**

(75) Inventor: **Richard A. Moore**, Raleigh, NC (US)

(73) Assignee: **Sony Ericsson Mobile Communications AB** (SE)

(*) Notice: Subject to any disclaimer, the term of this patent is extended or adjusted under 35 U.S.C. 154(b) by 839 days.

(21) Appl. No.: **10/199,453**

(22) Filed: **Jul. 19, 2002**

(65) **Prior Publication Data**

US 2004/0014426 A1 Jan. 22, 2004

(51) **Int. Cl.**
H04B 7/00 (2006.01)

(52) **U.S. Cl.** **455/41.2**; 455/41.1; 455/41.3; 381/111

(58) **Field of Classification Search** 455/41.1, 455/41.2, 41.3, 66.1; 379/88.01, 88.29; 381/111, 381/112, 113, 114, 115
See application file for complete search history.

(56) **References Cited**

U.S. PATENT DOCUMENTS

4,424,416	A	1/1984	Fukouka	
5,193,208	A *	3/1993	Yokota et al.	725/80
5,666,422	A *	9/1997	Harrison et al.	381/18
5,668,884	A *	9/1997	Clair et al.	381/82
5,673,323	A *	9/1997	Schotz et al.	381/2
5,814,752	A *	9/1998	Rivera	84/711
5,946,343	A *	8/1999	Schotz et al.	375/141
6,064,699	A *	5/2000	Law	375/244
6,111,960	A	8/2000	Aarts et al.	
6,337,913	B1 *	1/2002	Chang	381/14
6,424,820	B1 *	7/2002	Burdick et al.	455/41.1
6,591,085	B1 *	7/2003	Grady	455/42
6,809,635	B1 *	10/2004	Kaaresoja	340/407.1
2002/0048381	A1 *	4/2002	Tamayama	381/307
2004/0190529	A1 *	9/2004	Hara	370/395.42

FOREIGN PATENT DOCUMENTS

EP 0907122 4/1999

OTHER PUBLICATIONS

PCT Notification of Transmittal of the International Search Report or the Declaration dated Jun. 1, 2004.

* cited by examiner

Primary Examiner—Sanh D. Phu
(74) *Attorney, Agent, or Firm*—Coats & Bennett, P.L.L.C.

(57) **ABSTRACT**

Wirelessly linking a portable audio device to an external audio system permits the external audio system to generate audible signals that enhance local playback of audio by the portable device. For example, the portable device wirelessly transmits lower frequency components of an audio signal to a subwoofer system for reproduction of bass frequencies extending below the playback capability of the portable device. In this manner, the external audio system provides bass enhancement for the portable audio device. Wireless transmissions between the portable audio device and the external audio system may be, but are not limited to, optical or radio frequency (RF) transmissions. Where RF signaling is used, the wireless link may be based on wireless network links, such as those supported by Bluetooth and 802.11*b* standards, or based on, for example, dedicated RF interfaces.

76 Claims, 5 Drawing Sheets

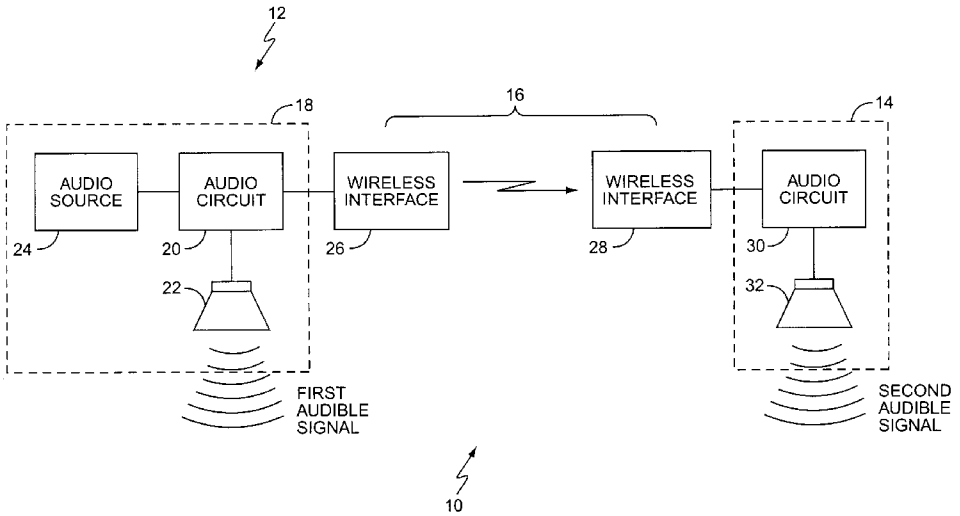

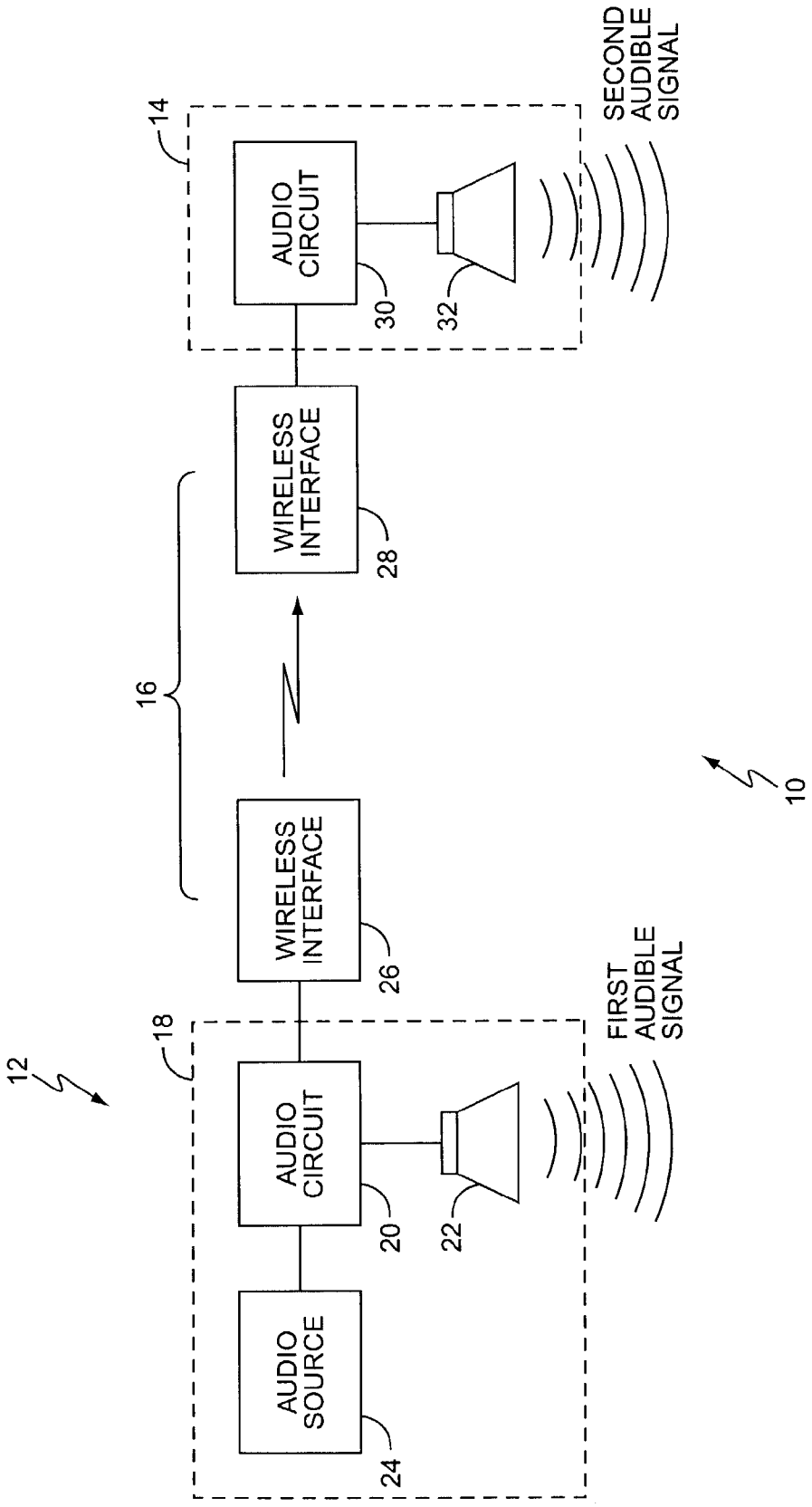
12
14
16
18
AUDIO SOURCE
24
AUDIO CIRCUIT
20
22
FIRST AUDIBLE SIGNAL
WIRELESS INTERFACE
26
WIRELESS INTERFACE
28
AUDIO CIRCUIT
30
32
SECOND AUDIBLE SIGNAL
10

FIG. 1

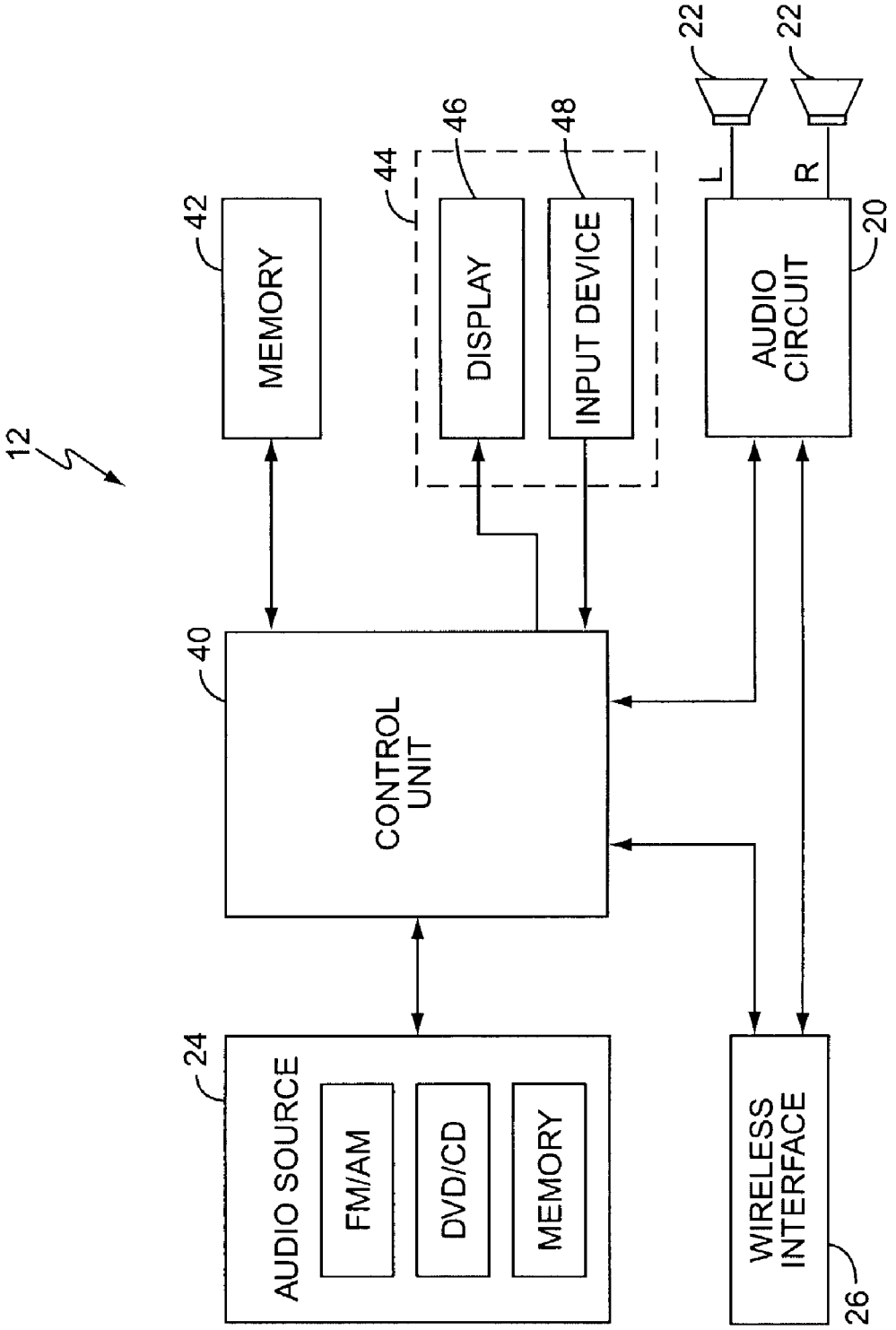
12
MEMORY
42
44
DISPLAY
46
INPUT DEVICE
48
22
L
R
22
AUDIO CIRCUIT
20
CONTROL UNIT
40
AUDIO SOURCE
24
FM/AM
DVD/CD
MEMORY
WIRELESS INTERFACE
26

FIG. 2

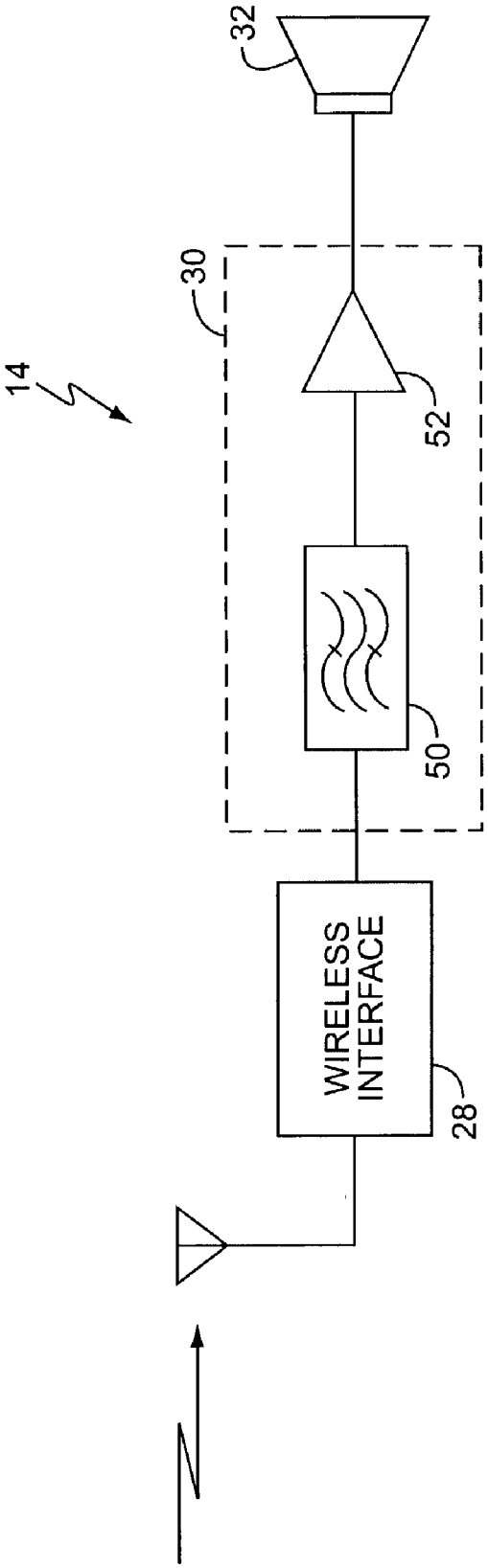

FIG. 3

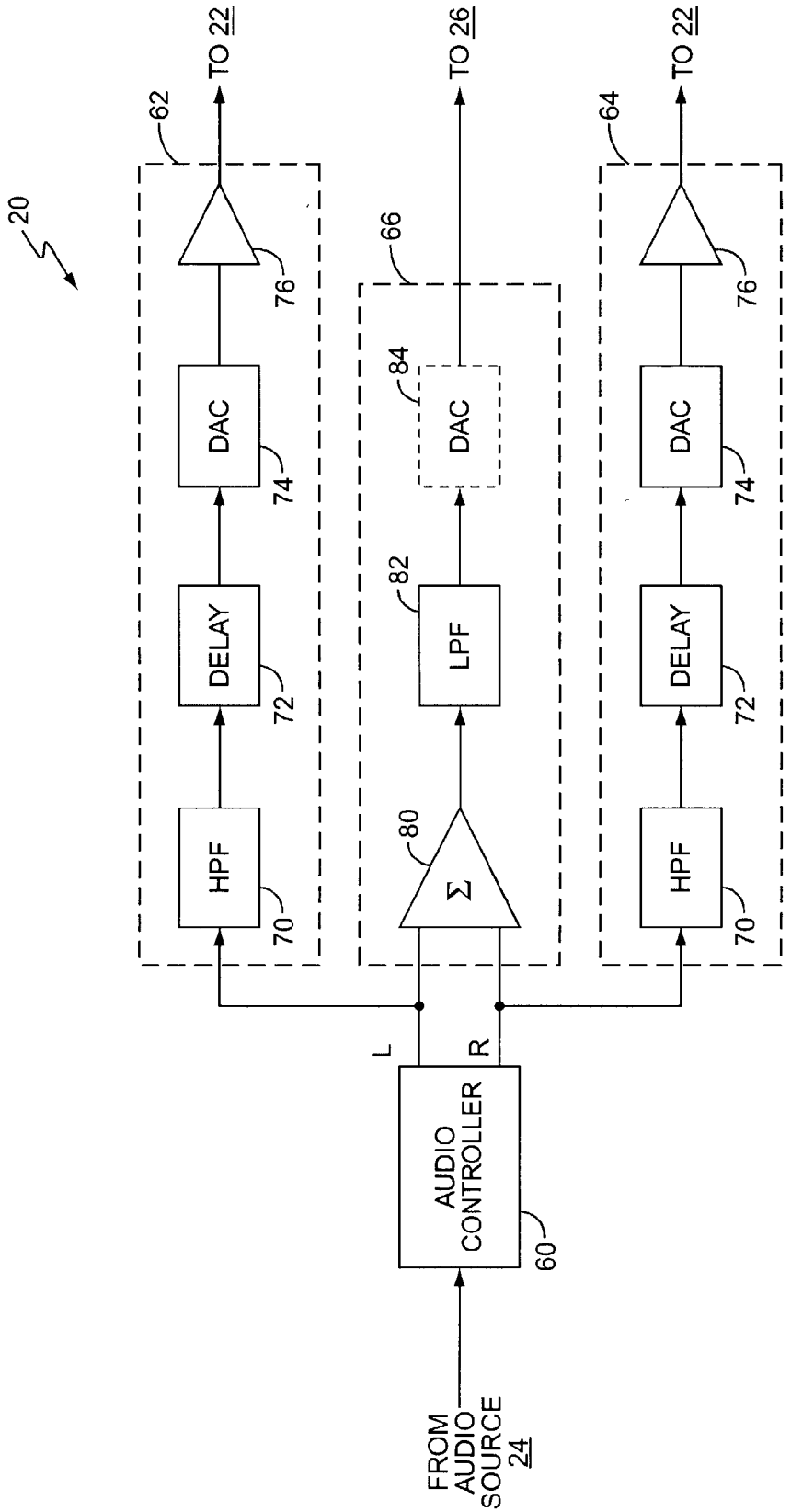
20
62
64
66
TO 22
TO 26
TO 22
76
DAC
74
DELAY
72
HPF
70
84
DAC
82
LPF
80
Σ
L
R
AUDIO CONTROLLER
60
FROM AUDIO SOURCE 24

FIG. 4

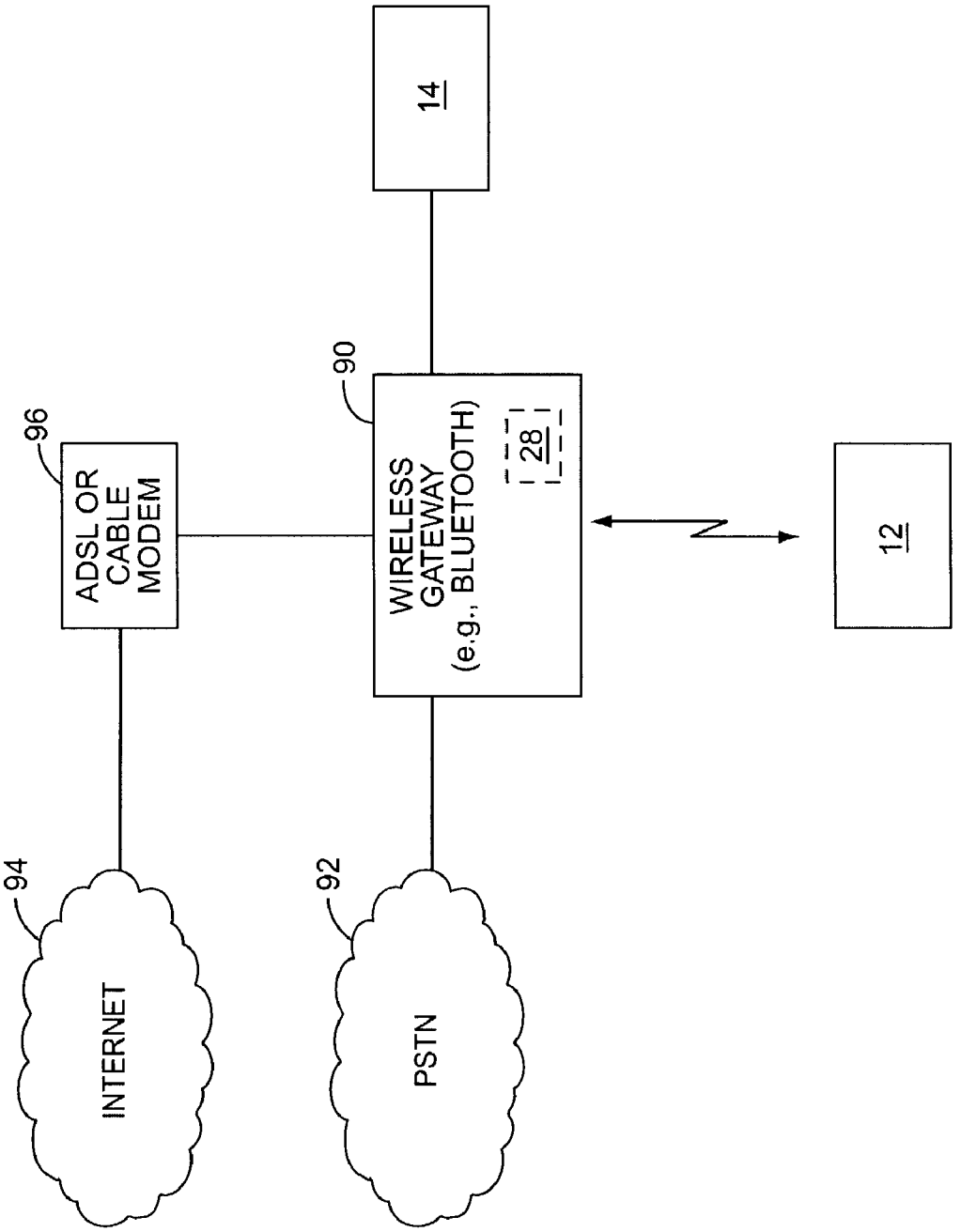
96
ADSL OR CABLE MODEM
94
INTERNET
90
WIRELESS GATEWAY (e.g., BLUETOOTH)
28
92
PSTN
14
12

FIG. 5

PORTABLE AUDIO PLAYBACK DEVICE WITH BASS ENHANCEMENT

BACKGROUND OF THE INVENTION

The present invention relates to portable audio devices, and more particularly, relates to portable audio devices capable of communicating with external audio systems to provide enhanced audio playback.

Advances in digital electronic technology have led to a rapid growth in portable audio devices. In particular, portable audio devices such as audio CD players, digital audio players, FM/AM radio receivers, televisions, and DVD players have become increasingly popular among consumers as they have become small, lightweight, and easy for an individual to carry. Most such devices include small, built-in speakers or provide attached headphones that, in some instances, offer relatively good audio quality.

However, the size limitations of speakers for such devices significantly limit their ability to generate significant sound pressure levels across the full audio range. More particularly, small speakers commonly used in portable audio devices, or in audio headphones intended for attachment to such devices, simply cannot generate significant bass output. As a result, audio playback often lacks the full range sound available from audio systems employing full-size speakers. Such full-size speakers use one or more relatively large audio drivers, commonly referred to as "woofers" or "subwoofers," to generate the lower frequency components of an audio signal. While no specific frequency cutoffs exist, frequency components below 100 Hz and extending down to 20 Hz or lower are commonly regarded as the bass components of an audio signal. At these frequency ranges, there is simply no substitute for physically large, high-powered audio drivers, which practically cannot be included in a portable audio device.

SUMMARY OF THE INVENTION

The present invention provides a method and apparatus to enhance audio playback from a portable audio device by wirelessly linking the portable audio device to an external audio system offering extended audio output capabilities. Because size constraints imposed on the speakers included in portable audio devices limit their ability to reproduce lower frequency signals, exemplary embodiments of the present invention use the external audio system to provide bass enhancement. In an exemplary embodiment, the portable audio device generates a first audible signal responsive to an audio signal, and transmits lower frequency components of the audio signal to the external audio system, which generates a second audible signal responsive to the low frequency components of the audio signal being played by the portable device.

Transmission of low frequency audio information from the portable device to the external audio system may be thought of as transmitting an "enhancement signal." Generally, the portable device processes the audio signal such that generation of the first audible signal is time aligned with generation of the second audible signal at the external audio system. That is, the portable device delays local playback to account for any link delays associated with transmitting the enhancement signal to the external audio system via the wireless link to ensure that bass enhancements in the second audible signal are correctly timed with respect to the first audible signal.

In exemplary embodiments, the wireless link comprises at least one data channel suitable for transmitting the enhancement signal information. In a preferred embodiment, the enhancement signal is sent via a relatively low data rate channel, which is suitable for the low-frequency information content of the enhancement signal. The wireless link may comprise multiple channels such that the enhancement signal may be sent while carrying on other communication functions.

As an example, the portable audio device might receive streaming audio content on a high data rate channel of the wireless link, and transmit an associated enhancement signal for playback enhancement of the streaming audio on a second, lower data rate channel of the wireless link. Moreover, the portable audio device might time-share the second channel with other applications or device functions, such as where the portable audio device comprises a cellular phone or laptop computer with music playback functionality.

In an exemplary time-sharing scenario, the portable audio device supports a telephony application or other communication application in addition to its playback enhancement functionality. When its communication application is inactive, the portable audio device uses the wireless link to transmit the enhancement signal. Such transmission is then suspended or otherwise halted once the communication application becomes active and the wireless link channel used to carry the enhancement signal is then used for the communication function. As part of this time-sharing functionality, the portable audio device might automatically suspend both local playback and enhancement signal transmission upon activation of the communication function.

BRIEF DESCRIPTION OF THE DRAWINGS

FIG. **1** is a diagram of an exemplary system for audio playback enhancement.

FIG. **2** is a diagram of exemplary details for the portable audio device of FIG. **1**.

FIG. **3** is a diagram of exemplary details for the external audio system of FIG. **1**.

FIG. **4** is a diagram of exemplary audio signal processing at a portable device.

FIG. **5** is a diagram of an exemplary playback enhancement using wireless networking.

DETAILED DESCRIPTION OF THE INVENTION

FIG. **1** illustrates an exemplary audio playback system according to the present invention. The audio playback system, generally referred to by the numeral **10**, comprises a portable audio device **12** and an external audio system **14** communicating over a wireless link **16**. In operation, portable audio device **12** provides local audio playback, which is enhanced by audio playback at audio system **14** responsive to a playback enhancement signal transmitted from device **12** to audio system **14** via wireless link **16**. That is, external audio system **14** generates audible output responsive to the enhancement signal to enhance the audible output of portable audio device **12**.

In an exemplary embodiment, portable audio device **12** comprises an audio playback unit **18** including an audio circuit **20**, one or more speakers **22** and audio source **24**, and a wireless interface **26** for communicating via wireless link **16**. A second wireless interface **28** is associated with or

included in audio system **14**, which, in an exemplary embodiment, comprises an audio circuit **30** and one or more speakers **32**.

Portable audio device **12** outputs a first audible signal through associated speakers **22**. Speakers **22** are typically on-board speakers or headset speakers that connect to the portable audio device **12**. In either case, the speakers **22** generally are physically small and lack the frequency range of full-size speakers. The external audio system **14**, in contrast, typically includes larger speakers **32** having a lower frequency range than the portable audio device's speakers **22**. More particularly, external audio system **14** will typically include woofers and/or subwoofers for reproducing low frequency components of an audio signal.

Thus, in exemplary playback enhancement operation, the portable audio device **12** generates a first audible signal responsive to an audio signal, and transmits at least the lower-frequency components of the audio signal to the external audio system **14** such that it outputs a second audible signal through speakers **32**. Here, the second audible signal includes at least the lower-frequency components of the audio signal being played back by portable audio device **12**, and thus provides bass enhancement for portable audio device playback.

As noted, such bass enhancement is particularly meaningful where the bass response of portable device **12** is limited because of the necessarily small size of its included speakers **22**. Including the low-frequency components of the audio signal of interest in the enhancement signal allows the audio system **14** to enhance playback of the audio signal by reproducing the low-frequency components of the audio signal. The external audio system **14** thus serves, in this context, as a remote sub-woofer for the portable audio device **12**.

FIG. **2** illustrates exemplary details for portable audio device **12**. Portable audio device **12** includes a main control unit **40** for controlling the operation of the portable audio device **12**, a memory **42** for storing control programs and data used by the portable audio device **12** during operation, the audio source **24** for storing or providing audio content played back by the portable audio device **12**, a user interface **44**, the wireless interface **26**, the audio circuit **20**, and speakers **22**.

Audio source **24** may comprise any type of audio storage media, such as a compact disc (CD), digital audio tape (DAT), digital versatile disc audio (DVD/Audio), or non-volatile memory containing audio content such as MPEG Layer 3 (MP3) audio content. Generally, audio content may be stored in either digital or analog format. Audio source **24** may also comprise a radio receiver adapted to receive radio signals that include audio content. Thus, in at least some embodiments, wireless resources in wireless interface **26** may provide audio information for playback by device **12**.

The user interface **44** provides a means for the user to control the operation of the portable audio device **12**. The user interface **44** may include a display **46** and a keypad or other user input device **48**. The keypad or other user input device **48** enables the user to enter commands and select options. The display **46** allows the user to view prompts, menu options, or information concerning operation of device **12**.

The audio circuit **20** accepts audio inputs from the audio source **24** in either analog or digital format and provides basic analog audio outputs to the speakers **22**. Note that audio circuit **20** may receive audio content indirectly through controller **40**, particularly where such content is in digital format, or may obtain such content directly from audio source **24**. Audio circuit **20** further provides the enhancement signal, or information for generation of the enhancement signal, to the wireless interface **26** for transmission over the wireless link **16** to the external audio system **14**.

In the context of the present invention, wireless interface **26** is used to transmit the enhancement signal from portable audio device **12** to audio system **14** via wireless link **16**. However, as will be detailed later herein, wireless interface **26** supports, in at least some embodiments, additional functionality. For example, wireless interface **26** may be used to transmit playback enhancement control information to audio system **14** via its associated wireless interface **28**. Such control information can include, but is not limited to, gain/volume control, muting, etc. Further, wireless interface **26** may include transceiver resources such that it can receive, for example, audio content for playback by device **12** while simultaneously transmitting the enhancement signal to the external audio system **14**.

FIG. **3** illustrates exemplary details for external audio system **14**. The external audio system **14** may, for example, comprise an audio circuit **30** and at least one speaker **32**. Audio circuit **30** couples to the wireless interface **28**, which may be internal or external to the audio system **14**, to receive the enhancement signal from the portable audio device **12**. Thus, the wireless interface **28** receives the enhancement signal from the portable device **12** and passes the audio enhancement signal to the audio circuit **30** for playback.

Depending on implementation details, the wireless interface **28** might generate a line-level output signal responsive to its receiving the enhancement signal via the wireless link **16**. Such a pre-amplifier type output signal is particularly suitable where audio circuit **30** comprises, for example, an audio amplifier or stereo receiver having one or more audio source inputs compatible with pre-amplifier level signals. Those skilled in the art will recognize the many possibilities for inputting enhancement signal information into audio circuit **30**. Regardless of signal format, audio circuit **30** generates a speaker-level output signal responsive to the enhancement signal, such that speaker **32** is driven with a higher power audio signal responsive to the audio enhancement signal from the portable audio device **12**.

The audio circuit **30** may include a low pass filter **50** and an audio amplifier **52**. Band pass filter **50** advantageously removes the high frequency components and noise from the received enhancement signal. Amplifier **52** amplifies the enhancement signal for output to speaker **32**. As noted earlier, the speaker **32** might comprise a sub-woofer, or one or more other bass drivers of substantial physical size relative to the speakers **22** in the portable device **12**. Of course, one of the further advantages to relying on audio system **14** for bass reproduction is that it more readily provides the potentially significant power levels needed to generate sufficient sound pressure levels at the lower frequencies. That is, portable device **12** is typically battery powered and thus has limited power available for audio playback.

In earlier described operational details, it was noted that portable audio device **12** generates a first audible signal responsive to an input audio signal and transmits an audio enhancement signal containing low frequency components of the audio signal to the external audio system **14** over wireless link **16**. In turn, audio system **14** generates a second audible signal that enhances the first audible signal, such as by reproducing the lower frequency components of the audio signal. However, generation of the second audible

signal involves transmission of the enhancement signal via wireless link **16**, which typically involves some amount of link delay.

Portable audio device **12** includes, in exemplary embodiments, a delay matching function such that audio playback at the portable audio device **12** is time-aligned with enhancement playback at the external audio system **14**. Thus, portable audio device **12** introduces a playback delay for the first audible signal relative to the audio signal, such that its local generation of the first audible signal is delayed by an amount matched to the relative delay associated with generation of the second audible signal at the external audio system **14**. More particularly, the portable audio device **12** introduces a relative playback delay for its local playback to at least account for the link delays associated with transmission of the enhancement signal over wireless link **16**.

FIG. **4** illustrates the audio circuit **20** of the portable audio device **12** in more detail. It should be noted that FIG. **4** illustrates functional elements of the audio circuit **20**, and is not necessarily meant to imply any particular physical arrangement of those elements. The illustrated functions could be integrated into a common processing element, such as a digital signal processor (DSP), and, in general, might be performed in a mix of hardware and software. The type of processor used may depend on the nature of portable device **12**.

Thus, audio controller **60** may be a digital signal processor (DSP), or a microprocessor or micro-controller executing stored program instructions supporting playback and playback enhancement functions, or may be some other form of processing logic, such as a Complex Programmable Logic Device (CPLD), Field Programmable Gate Array (FPGA), or Application Specific Integrated Circuit (ASIC). Audio controller **60** might perform other functions besides audio processing. For example, the portable audio device **12** could include a single processor serving both as the audio circuit **20**, or some portion thereof, and as the main control unit **40**.

Regardless, an exemplary audio circuit **20** comprises audio controller **60**, a left channel circuit **62**, a right channel circuit **64**, and an enhancement channel circuit **66**. Audio controller **60** reads or otherwise receives audio content from, for example, audio source **24**, and outputs an audio signal. In the disclosed embodiment, the audio signal output by the audio controller **60** is a stereo signal having left (L) and right (R) signal components, which are fed respectively to the left and right channels **62**, **64** of audio circuit **20**.

The left and right channel circuits **62** and **64** each include a high pass filter **70**, a delay element **72**, a converter **74**, and an amplifier **76**. High-pass filter **70** removes lower frequency components of the channel's audio signal, which may improve audio performance of speakers **22**. The filtered audio signal feeds into the delay element **72**, which may comprise, for example, a memory to buffer the audio signal. The filtered and delayed audio signal then feeds into converter **74**, which converts the audio signal to an analog signal for output to a respective speaker **22**. Note that the digital-to-analog converters **74** generally are not needed where the audio signal is processed in analog format. The analog signal drives amplifier **76**, which outputs a responsive amplified output signal suitable for driving the associated speaker **22**. Thus, speakers **22** generate the first audible signal at the portable device **12** responsive to the audio signal output by audio controller **60**.

Audio controller **60** also outputs the audio signal to the enhancement channel circuit **66**, which may operate as a low-frequency channel. Enhancement channel circuit **66** includes a summer **80**, a low pass filter **82**, and may include a digital-to-analog converter **84**. Summer **80** combines the left and right audio signals output by audio controller **60** to form a combined signal for input to low pass filter **82** (assuming that a stereo signal is output from audio controller **60**). Low pass filter **82** removes higher frequency components of the combined audio signal. The low frequency components of the combined audio signal, i.e. the enhancement signal, output by the low pass filter **82** may then be converted to analog format by digital-to-analog converter **84** for transmission to the external audio system **14** via wireless interface **26**. If the combined audio signal is transferred to wireless interface **26** in digital rather than analog format, converter **84** is not needed.

In an exemplary arrangement, the frequency roll-off points for high pass filters **70** are matched to the roll-off of low pass filter **82** in the low frequency channel. With such matching, the filters **70** and **82** operate as an audio crossover filter to keep the lower frequency cutoff of the portable device's speakers **22** matched to the frequencies transferred to the external audio system **14** for playback enhancement. Those skilled in the art will appreciate that the filtering/conversion circuitry is reduced where the audio signal is monaural, i.e., single-channel format. Thus, with a monaural signal, summer **80** is not needed, and either the left or right channel circuits **62** or **64** of the audio circuit **20** may be omitted. Of course, it may be desirable for the audio circuit **20** to generally accommodate stereo and other multi-channel formats, along with monaural audio signal formats.

Proper delay matching between the first and second audible signals ensures that audible output from external audio system **14** is properly time-aligned with the audible output from portable audio device **12**. While there may be various sources of delay within the overall audio signal path(s), the wireless link **16** generally accounts for a significant part of the delay of the second audible signal relative to the audio signal output by audio controller **60**. Thus, delay elements **72** introduce delays in the audio signal path associated with generation of the first audible signal at the portable audio device **12**.

Delay elements **72** operate to impart essentially the same delay to the first audible signal relative to the audio signal output by audio controller **60**, as that imparted to the second audible signal by the wireless link **16**. Such delay matching ensures proper time alignment between the first audible signal output by portable device **12** and the second audible signal output by external audio system **14**. That is, proper delay matching ensures that the bass enhancements provided by audio system **14** are in phase with respect to the music or other audio played back at the portable device **12**.

Calculation of the required delay may be based on a default delay value assumed for the wireless link **16**, and for the audible signal delay from the external audio system **14** relative to the user, plus any delays associated with audio signal conversion and amplification, although these additional delays are generally small. One approach permits tuning of the delay elements **72** to achieve essentially perfect delay matching. For example, portable device **12** may permit the user to set or otherwise adjust the delay imparted to the first audible signal to accommodate the actual delay of second audible signal relative to the audio signal. However, a default delay value matched to the characteristics of wireless link **16**, possibly with additional delay time for the audible signal delay, is normally all that is needed.

Implementation of the delay elements **72** depends upon whether the audio signal output by audio controller **60** is processed in digital or analog format. In the illustration,

delay elements **72** comprise digital delay elements that are easily implemented by buffering the audio signal in either hardware or software. For analog signal buffering, analog delay elements may be used, such as analog delay lines. For greater convenience, the audio signal might be converted to digital format, delayed, and then converted back to analog.

Even where the audio signal is processed in digital format, it is generally necessary to convert it to analog format, as most types of speakers require an analog input signal to produce the desired audible output. Thus, converters **74** convert, respectively, the left and right audio signals into analog signals suitable for input to amplifiers **76**. Converters **74** might comprise individual converters or might comprise a portion of a larger, multi-channel digital-to-analog converter (DAC). Those skilled in the art will recognize that various DAC types may be used, such as current-mode or voltage-mode DACs, depending upon the input characteristics of the amplifiers **76**, and the desired audio fidelity.

The wireless interfaces **26** and **28** may be based on, for example, the Bluetooth wireless networking standard promulgated by the Bluetooth Special Interest Group. While an exemplary embodiment of the invention as described herein uses a Bluetooth-based wireless link **16**, it should be understood that other wireless network types might also used, such as those based on IEEE 802.11b or other standards.

Bluetooth is a standard for a universal radio interface in the 2.45 GHz frequency band that enables portable electronic devices to connect and communicate wirelessly via short-range, ad hoc networks. An overview of the Bluetooth standard is contained in the article entitled "The Bluetooth Radio System" authored by Jaap Haartsen, which can be found in IEEE Personal Communications, February 2000. For the purposes of the present invention, only Bluetooth features of immediate interest are described herein.

The Bluetooth standard incorporates search procedures that allow wireless devices to form ad hoc networks as they come within range of one another. Using a Bluetooth interface, the portable audio device **12** is able to recognize when it is in range of the external audio system **14**. The Bluetooth standard also supports capability negotiation so that devices coming within range of one another are able to determine the capabilities of found devices. The portable audio device **12** implementing the Bluetooth standard may be programmed to begin transmitting an enhancement signal automatically when a compatible external audio system **14** is available or, alternatively, the portable audio device **12** could be programmed to notify the user when a compatible external audio system **14** is available. In the latter case, the user can determine whether to enable the enhancement function.

Where, automatic enabling and disabling of playback enhancement is desirable, it is advantageous to generally include delay elements **72** in the audio signal path of portable audio device **12** associated with generation of the first audible signal. With such delay being persistent, users do not perceive any audio discontinuity associated with "synchronizing" playback enhancement at audio system **14** with ongoing audio playback at portable device **12**.

The Bluetooth standard supports both Synchronous Connection-Oriented (SCO) links and Asynchronous Connection-less (ACL) links. SCO links are point-to-point and do not utilize packet retransmissions. Consequently, SCO links are relatively efficient for voice/audio transmissions where individual packet data integrity is not essential. ACL links are packet-switched connections and provide for negotiated packet re-try to ensure data transmission integrity. Thus, the Bluetooth baseband protocol represents a combination of circuit and packet switching. Bluetooth can support an asynchronous data channel at over 720 Kbps, up to three simultaneous synchronous voice channels, or a combined channel that simultaneously supports asynchronous data and synchronous voice. With this latter capability, the portable device **12** can receive data, such as streaming audio from the Web for local playback through wireless link **16**, while simultaneously sending its enhancement signal to audio system **14** for playback enhancement.

More particularly, portable audio device **12** may use a Bluetooth "voice" channel to transmit the enhancement signal to the external audio system **14**. Such voice channels adopt a 64 Kbps data rate and use Continuously Variable Slope Delta (CVSD) encoding, which is appropriate for transferring the lower frequency audio components used to enhance audio playback. By using a CVSD voice channel, the higher rate Bluetooth data channel remains available for, as noted, receipt of streaming audio or other media content from the Web, or other uses. Of course, it should be understood that use of a Bluetooth voice channel is an efficient approach to transferring audio content for playback enhancement regardless of whether the portable audio device **12** receives streaming audio via the wireless link **16**, or obtains audio data locally from, for example, local media included in audio source **24**.

In general, the wireless link **16** may support additional functionality beyond the simple transfer of the enhancement signal from the portable audio device **12** to audio system **14** for playback enhancement. For example, the wireless link **16**, whether or not based on a wireless networking standard, may allow the portable audio device **12** to transmit control signals to control the operation of the external audio system **14**. Control signals may be used, for example, to provide volume control and muting of the second audible signal by the portable audio device **12**.

FIG. **5** provides an illustration of the flexibility and user convenience gained from wireless network-based embodiments of the present invention. Here, a wireless gateway **90**, e.g., a Bluetooth-based wireless gateway, is communicatively coupled to the Public Switched Telephone Network (PSTN) **92**, and to the Internet or other Public Data Network (PDN) **94** through, for example, an Asymmetric Digital Subscriber Line (ADSL) or cable modem **96**. Wireless gateway **90** includes wireless interface **28**, or equivalent wireless interface capability, such that it is communicatively coupled to the portable audio device **12** and can therefore receive the enhancement signal from that device for playback enhancement by external audio system **14**. As such, external audio system **14** is also communicatively coupled to wireless gateway **90**. Such coupling may be through a wireless channel, or wireless gateway **90** might provide a hardwired signal output to transfer received enhancement signal information to audio system **14**.

In this exemplary embodiment, portable audio device **12** generally comprises a multi-use device such that it provides audio playback capability in addition to other functions or services. For example, portable audio device **12** might comprise a cellular or other wireless telephone, wireless Portable Digital Assistant (PDA), laptop computer, etc., capable of running one or more wireless communication applications in addition to its audio playback application. As such, the wireless link **16** between the portable audio device **12** and wireless gateway **90** may be used to route Web or other packet data traffic to and from the portable audio device **12**, as well as to route voice call data to and from it, whether such data is associated with the PSTN **92** or the PDN **94**.

In an exemplary embodiment, playback enhancement can be automatically suspended whenever an incoming call for portable device **12** is received at the wireless gateway **90**, or when a user of the portable device **12** originates a call. Thus, local audio playback at the portable device **12** and enhancement playback at audio system **14** may be suspended or otherwise muted to avoid interfering with a user's voice call. As such, the wireless gateway **90** may be configured to recognize when playback enhancement is active, such that it can suspend the enhancement function responsive to the call.

As noted, that call may be carried on a Bluetooth data or voice channel via the wireless link **16**. While playback is suspended, call data may be routed over the same Bluetooth voice channel as is otherwise used for playback enhancement; thus the resources used for playback enhancement are shared cooperatively with telephony or other data transfer functions.

Of course, whether the wireless link **16** is based on Bluetooth or another wireless networking standard, the adoption of a bi-directional communication link affords convenient implementation of user features discussed above, such as automatic start of playback enhancement, automatic muting, remote control of volume/muting for the second audible signal generated by the external audio system **14**. Those skilled in the art will appreciate that these and other playback enhancement functions, while facilitated by the use of Bluetooth, do not depend on a particular wireless standard, and may be implemented in a variety of other ways.

Also, those skilled in the art will recognize that the wireless link **16** need not be bi-directional for basic playback enhancement; the portable device **12** may send an enhancement signal or otherwise transfer low-frequency audio information for playback enhancement using digital or analog radio transmission, using an optical transmitter/receiver arrangement, or by some other transmission means. Thus, those skilled in the art should understand that the foregoing discussion presented exemplary embodiments of the present invention and should not be construed as limiting. Indeed, the present invention is limited only by the scope of the following claims and the reasonable equivalents thereof.

What is claimed is:

1. A portable audio device comprising:

a portable audio playback unit comprising an audio circuit for generating an audio signal and at least one speaker coupled to the audio circuit, said speaker being responsive to the audio signal to generate a first audible signal; and

a wireless interface coupled to the audio circuit to transmit an enhancement signal comprising low frequency components of the audio signal, the enhancement signal being derived from the audio signal to an external audio system that generates a second audible signal enhancing the first audible signal.

2. The portable audio device of claim **1** wherein the audio circuit comprises at least one delay matching element to match the delays of the first and second audible signals so that the first and second audible signals are time aligned.

3. The portable audio device of claim **2** wherein the delay matching element delays the first audible signal to match link delays associated with transmission of the enhancement signal to the external audio system.

4. The portable audio device of claim **2** wherein the delay matching element delays the first audible signal to match audible signal delays associated with output of the second audible signal from the audio system.

5. The portable audio system of claim **3** wherein the delay of the first audible signal is persistent so that transmission of the enhancement signal for enhancement of the first audible signal can be selectively enabled and disabled without creating an audible discontinuity.

6. The portable audio device of claim **1** wherein the audio circuit includes a first filter to generate the enhancement signal by filtering the audio signal.

7. The portable audio device of claim **6** wherein the first filter is a low-pass filter.

8. The portable device of claim **6** wherein the audio circuit further comprises a second filter to filter the audio signal to generate the first audible signal.

9. The portable audio device of claim **8** wherein the first and second filters form a cross-over filter.

10. The portable audio device of claim **8** wherein the first filter is a low pass filter and wherein the second filter is a high pass filter.

11. The portable audio device of claim **1** wherein the audio signal is multi-channel audio signal and wherein the audio playback unit includes at least two speakers, each outputting a respective channel of the multi-channel audio signal.

12. The portable audio device of claim **11** wherein the audio circuit further comprises a summer to generate the enhancement signal by combining two or more channels of the audio signal.

13. The portable audio device of claim **1** wherein the audio playback unit further comprises a control unit controlling the audio playback unit.

14. The portable audio device of claim **13** wherein the control unit sends control signals via the wireless interface to the external audio system to control the external audio system.

15. The portable audio device of claim **13** wherein the control unit sends volume control signals to the external audio system to control the volume of the second audible signal.

16. The portable audio device of claim **1** wherein the wireless interface comprises a digital wireless networking interface supporting communication via a digital wireless network link.

17. The portable audio device of claim **16** wherein the digital wireless network link includes a low data rate channel and wherein the enhancement signal is transmitted by said portable audio device to said external audio system over the low data rate channel.

18. The portable audio device of claim **17** wherein the low data rate channel is an unsupervised channel.

19. The portable audio device of claim **17** wherein the wireless networking interface is a Bluetooth interface and wherein the low data rate audio channel is a CVSD voice channel.

20. The portable audio device of claim **17** wherein the low data rate channel is time-shared by said audio playback unit with a telephony application for making voice calls.

21. The portable audio device of claim **20** including a playback mode during which the enhancement signal is transmitted over the low data rate channel to the external audio system, and a voice mode during which transmission of the enhancement signal is suspended and the low data rate channel is used to support a voice call.

22. The portable audio device of claim **17** wherein the wireless network link further includes a high data rate channel.

23. The portable audio device of claim 22 wherein the audio signal is derived from information received over the wireless interface on said high data rate channel.

24. The portable audio device of claim 1 wherein said wireless interface supports ad hoc networking so that said portable audio device detects availability of the external audio system for playback enhancement.

25. The portable audio device of claim 24 wherein said portable audio device automatically transmits the enhancement signal when the external audio system is available for play back enhancement.

26. The portable audio device of claim 24 wherein said portable audio device notifies a user of the portable audio device when the external audio system is available for playback enhancement.

27. An audio system comprising:

a portable audio device including a first audio circuit and at least one speaker to output a first audible signal responsive to an audio signal;

an external audio system including a second audio circuit and a woofer to enhance the first audible signal by producing a second audible signal responsive to low-frequency components of the audio signal; and

a wireless link to transmit the low-frequency components of the audio signal from the portable audio device to the external audio system.

28. The audio system of claim 27 wherein the first audio circuit comprises at least one delay matching element to match delays of the first and second audible signals so that the first and second audible signals are time aligned.

29. The audio system of claim 28 wherein the at least one delay matching element delays the first audible signal to match link delays associated with the transmission of the low-frequency components of the audio signal to the external audio system.

30. The audio system of claim 29 wherein the delay of the first audible signal is persistent so that transmission of the low-frequency components of the audio signal can be selectively enabled and disabled without creating an audible discontinuity.

31. The audio system of claim 27 wherein the first audio circuit includes a first filter for filtering the first audio signal to obtain the low-frequency components of the audio signal.

32. The audio system of claim 31 wherein the first filter is a low-pass filter to output an enhancement signal including the low-frequency components of the audio signal.

33. The audio system of claim 31 wherein the first audio circuit further comprises a second filter to filter the audio signal to generate the first audible signal.

34. The audio system of claim 33 wherein the first and second filters form a cross-over filter.

35. The audio system of claim 33 wherein the first filter is a low pass filter and wherein the second filter is a high pass filter.

36. The audio system of claim 27 wherein the audio signal is multi-channel audio signal and wherein the portable audio device includes at least two speakers, each outputting a respective channel of the multi-channel audio signal.

37. The audio system of claim 36 wherein the first audio circuit further comprises a summer to obtain the low-frequency components of the multi-channel audio signal by combining two or more channels of the multi-channel audio signal.

38. The audio system of claim 27 wherein the portable audio device further comprises a control unit controlling the audio playback unit.

39. The audio system of claim 38 wherein the control unit sends control signals via the wireless interface to the external audio system to control the external audio system.

40. The audio system of claim 38 wherein the control unit sends volume control signals to the external audio system to control the volume of the second audible signal.

41. The audio system of claim 27 wherein the wireless interface comprises a digital wireless networking interface supporting communication via a digital wireless network link.

42. The audio system of claim 41 wherein the digital wireless network link includes a low data rate channel and wherein the low-frequency components of the audio signal are transmitted as an enhancement signal by the portable audio device to the external audio system over the low data rate channel.

43. The audio system of claim 42 wherein the low data rate channel is an unsupervised channel.

44. The audio system of claim 42 wherein the wireless networking interface is a Bluetooth interface and wherein the low data rate channel is a CVSD voice channel.

45. The audio system of claim 42 wherein the portable audio device time-shares the low data rate channel with a telephony application for making voice calls.

46. The audio system of claim 45 including a playback mode during which the enhancement signal is transmitted over the low data rate channel to the external audio system, and a voice mode during which transmission of the enhancement signal is suspended and the low data rate channel is used to support a voice call.

47. The audio system of claim 42 wherein the wireless network link further includes a high data rate channel.

48. The audio system of claim 47 wherein the audio signal is derived from information received over the wireless interface on the high data rate channel.

49. The audio system of claim 27 wherein the wireless interface supports ad hoc networking so that the portable audio device detects availability of the external audio system for playback enhancement.

50. The audio system of claim 49 wherein the portable audio device automatically transmits an enhancement signal comprising the low-frequency components of the audio signal when the external audio system is available for playback enhancement.

51. The audio system of claim 49 wherein the portable audio device notifies a user of the portable audio device when the external audio system is available for playback enhancement.

52. A method of enhancing audio playback of a portable audio device, the method comprising:

outputting a first audible signal from the portable audio device responsive to an audio signal; and

transmitting an enhancement signal containing the low-frequency components of the audio signal over a wireless network interface from the portable audio device to an external audio system that provides bass enhancement.

53. The method of claim 52, further comprising outputting a second audible signal from the external audio system responsive to the enhancement signal, wherein the second audible signal provides bass enhancement for the first audible signal.

54. The method of claim 52 further comprising matching delays of the first and second audible signals.

55. The method of claim 54 wherein matching delays of the first and second audible signals comprises delaying the first audible signal output from the portable audio device to

match a link delay associated with the transmission of the enhancement signal to the external audio system.

56. The method of claim **55** further comprising delaying the first audible signal during periods when no enhancement signal is being transmitted.

57. The method of claim **52** further comprising filtering the audio signal in a first filter to generate the enhancement signal.

58. The method of claim **57** wherein the first filter is a low pass filer that removes high frequency components of the audio signal to generate the enhancement signal.

59. The method of claim **57** further comprising filtering the audio signal in a second filter to generate the first audible signal.

60. The method of claim **59** wherein the first and second filters form a cross-over filter.

61. The method of claim **60** wherein the first filter is a low pass filter and the second filter is a high pass filter.

62. The method of claim **52** wherein the audio signal is a multi-channel audio signal and wherein the first audible signal is generated by two or more speakers.

63. The method of claim **62** further comprising combining two or more channels of the multi-channel audio signal to generate the enhancement signal.

64. The method of claim **52** further comprising sending control signals from the portable audio device to the external audio system to control the operation of the external audio system.

65. The method of claim **64** wherein controlling operation of the external audio system comprises sending volume control signals from the portable audio device to the external audio system to control the volume of the second audible signal.

66. The method of claim **52** wherein the wireless network interface provides support for a digital wireless network link.

67. The method of claim **66** wherein the digital wireless network link includes a low data rate channel and wherein the audio enhancement signal is transmitted by the portable audio device to the external audio system over the low data rate channel.

68. The method of claim **67** wherein the low data rate channel is an unsupervised channel.

69. The method of claim **68** wherein the wireless network interface is a Bluetooth interface and wherein the low data rate audio channel is a CVSD voice channel.

70. The method of claim **67** wherein the low data rate channel is time-shared by the portable audio device with a telephony application for making voice calls.

71. The method of claim **70** further comprising suspending transmission of the enhancement signal during a voice call.

72. The method of claim **67** wherein the wireless network link further includes a high data rate channel.

73. The method of claim **72** further comprising receiving audio content over the high data rate channel, wherein the audio signal is derived from the audio content received over the high data rate channel.

74. The method of claim **52** further comprising detecting availability of the external audio system for playback enhancement.

75. The method of claim **74** further comprising automatically transmitting the enhancement signal when the external audio system is available for playback enhancement.

76. The method of claim **74** further comprising notifying a user of the portable audio device when the external audio system is available for playback enhancement.

* * * * *

UNITED STATES PATENT AND TRADEMARK OFFICE

CERTIFICATE OF CORRECTION

PATENT NO. : 7,295,809 B2
APPLICATION NO. : 10/199453
DATED : November 13, 2007
INVENTOR(S) : Richard A. Moore

It is certified that error appears in the above-identified patent and that said Letters Patent is hereby corrected as shown below:

In the claims, in column 9, line 53 please make the following change: (a comma is added between the words 'signal' and 'to')

nal being derived from the audio signal, to an external

In the claims, in column 11, line 11 please make the following change:

~~play back~~ playback enhancement.

Signed and Sealed this

Fifteenth Day of April, 2008

JON W. DUDAS
Director of the United States Patent and Trademark Office