US 20020178279A1

(19) United States

(12) Patent Application Publication

(10) Pub. No.: US 2002/0178279 A1

(43) Pub. Date: Nov. 28, 2002

Janik et al.

(54) WEBPAD AND METHOD FOR USING THE SAME

(76) Inventors: **Craig M. Janik**, Los Altos Hills, CA (US); **Nick R. Kalayjian**, San Francisco, CA (US); **Bruce P. Edwards**, San Francisco, CA (US); **Joshua W. Ferguson**, San Francisco, CA (US)

Correspondence Address:
BLAKELY, SOKOLOFF, TAYLOR & ZAFMAN LLP
Seventh Floor
12400 Wilshire Boulevard
Los Angeles, CA 90025-1026 (US)

(21) Appl. No.: **10/125,025**

(22) Filed: **Apr. 17, 2002**

Related U.S. Application Data

(63) Continuation-in-part of application No. 09/955,723, filed on Sep. 18, 2001, which is a continuation-in-part of application No. 09/946,946, filed on Sep. 4, 2001.

(60) Provisional application No. 60/230,084, filed on Sep. 5, 2000. Provisional application No. 60/284,352, filed on Apr. 17, 2001.

Publication Classification

(51) **Int. Cl.**[7] **G06F 15/16**

(52) **U.S. Cl.** **709/231**; 709/219

(57) **ABSTRACT**

A webpad and method for using the same are provided. In one embodiment, information is determined about primary content being played on an audio device using a computer system Ancillary data is obtained relating to the primary content based on the information about the primary content. The ancillary data is automatically sent to the webpad for access therefrom as the primary content is being played on the audio device.

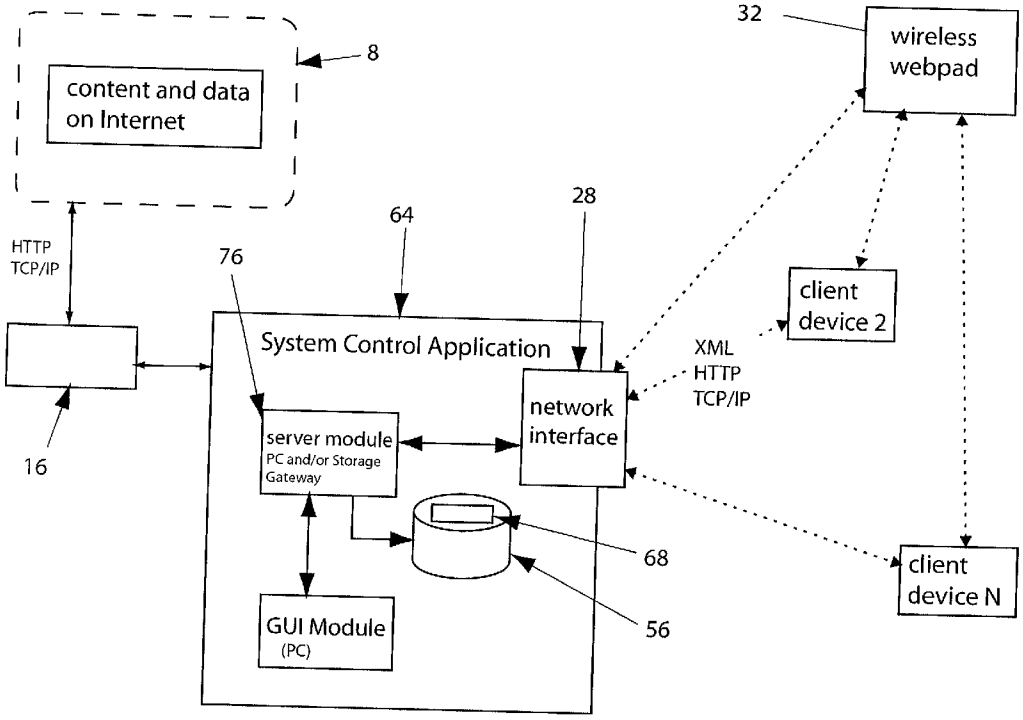

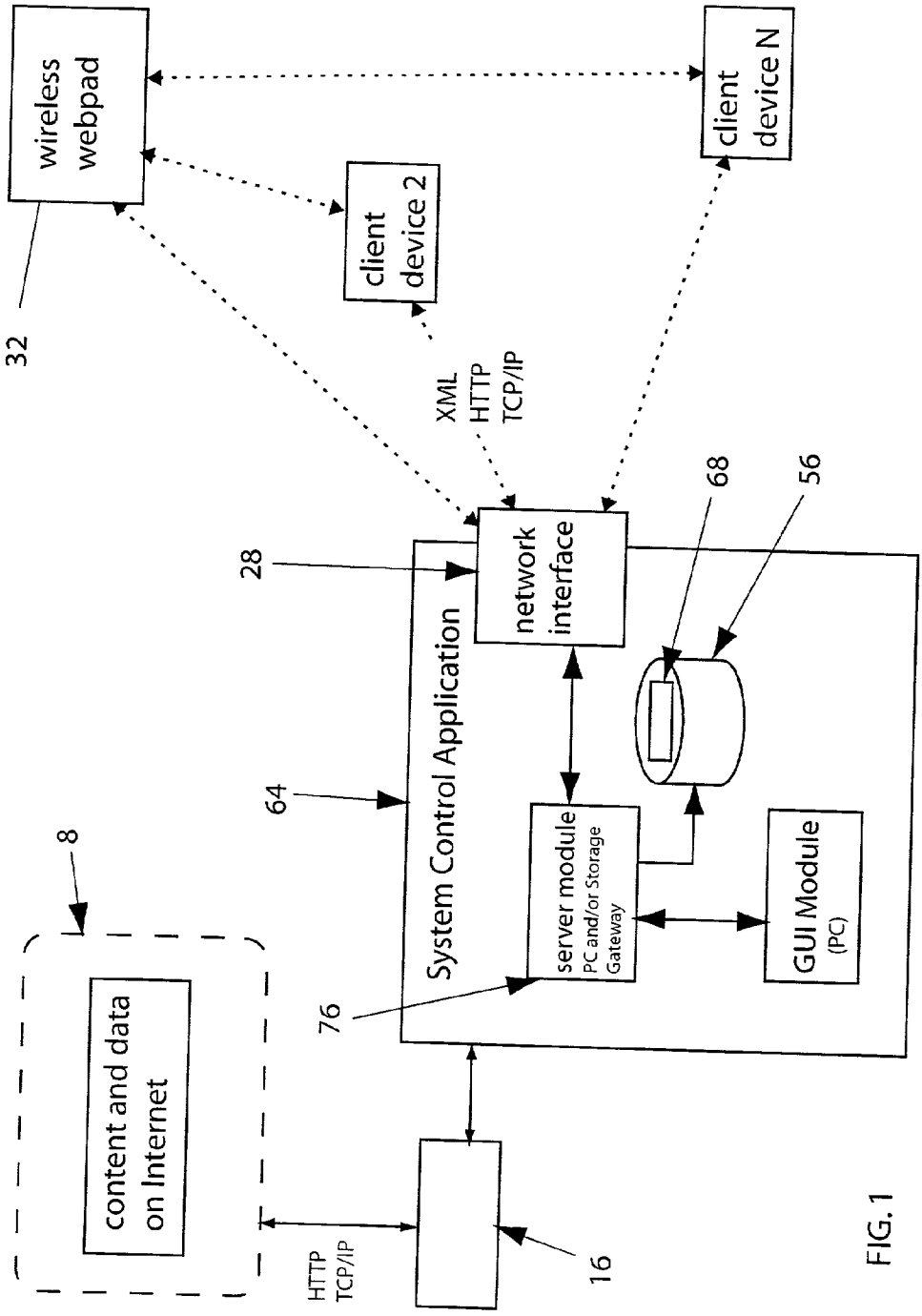
wireless webpad
32
client device 2
client device N
XML
HTTP
TCP/IP
28
network interface
68
56
64
System Control Application
server module
PC and/or Storage Gateway
GUI Module
(PC)
76
8
content and data on Internet
HTTP
TCP/IP
16

FIG. 1

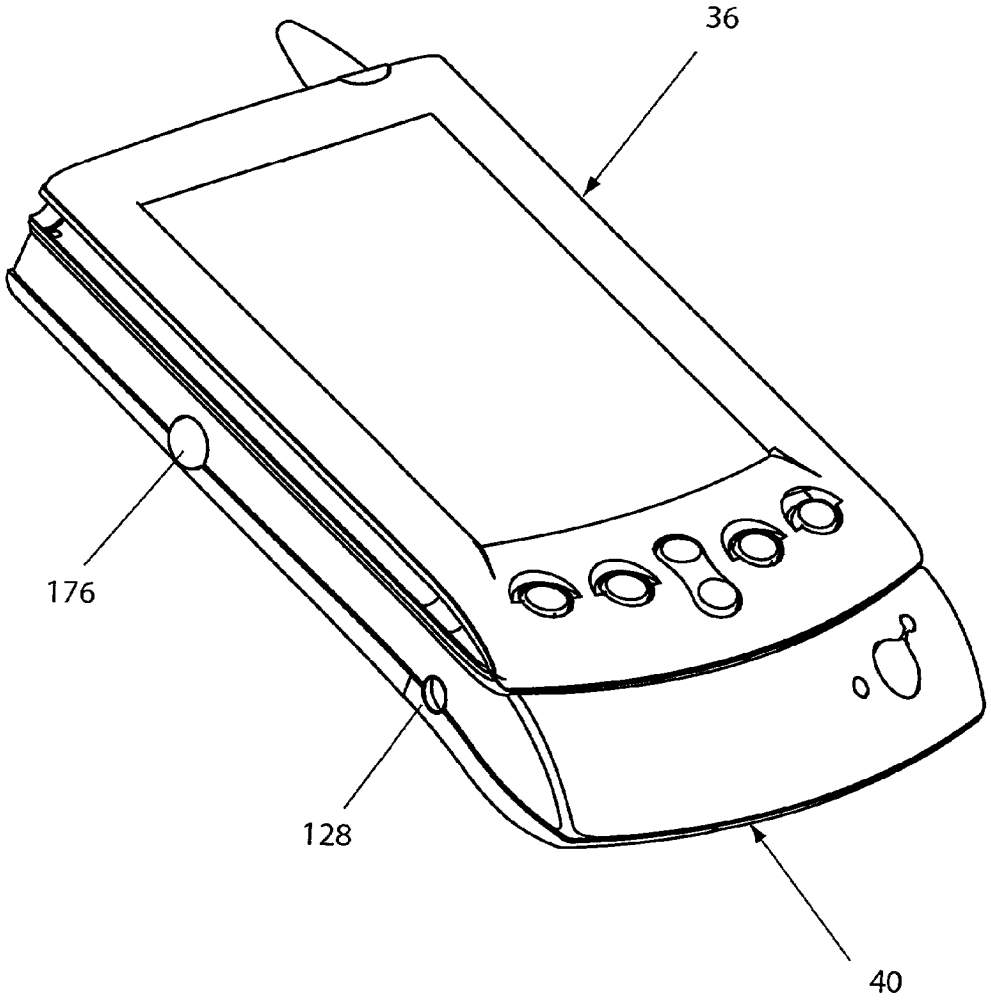

FIG. 2

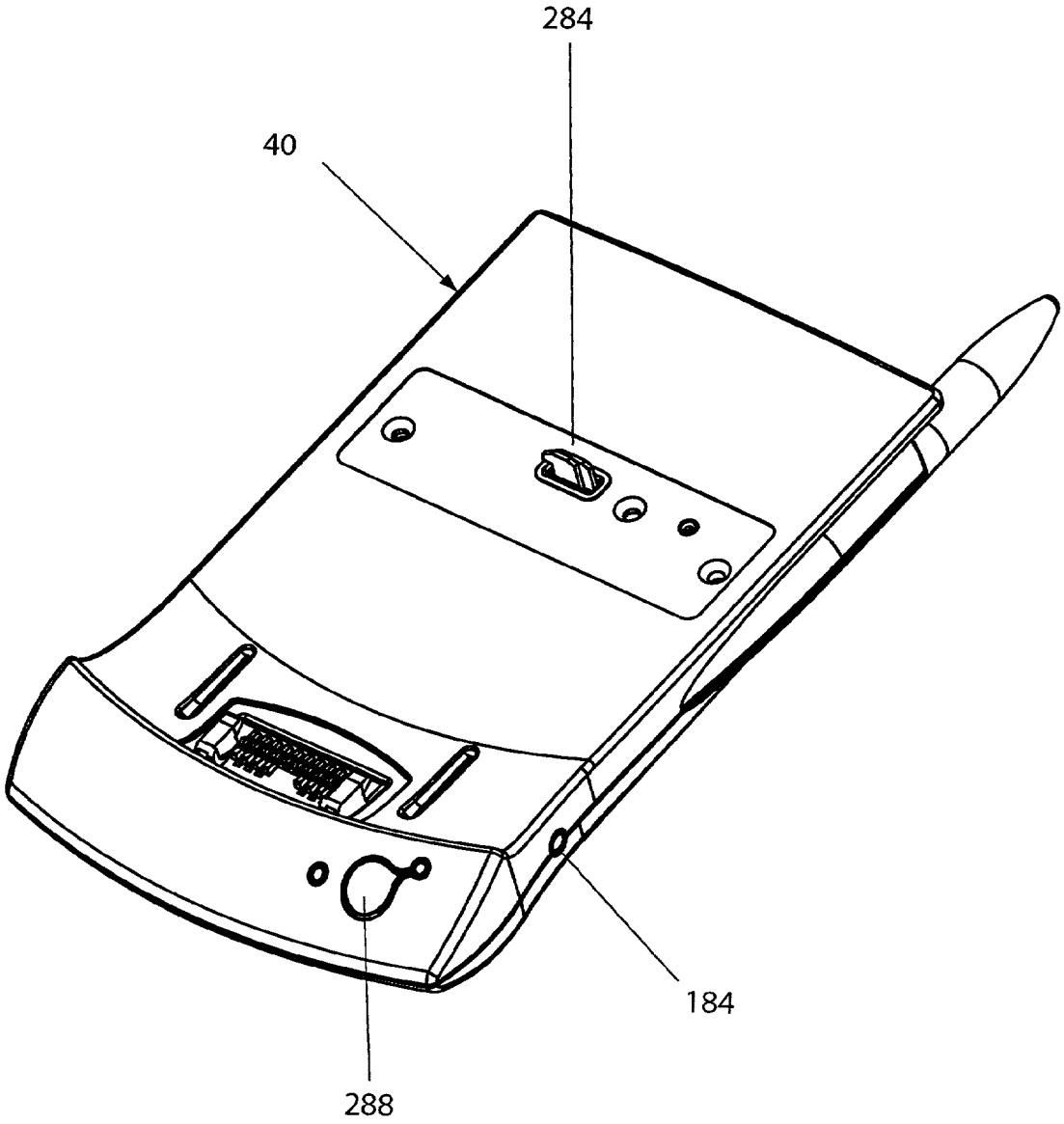

FIG. 3

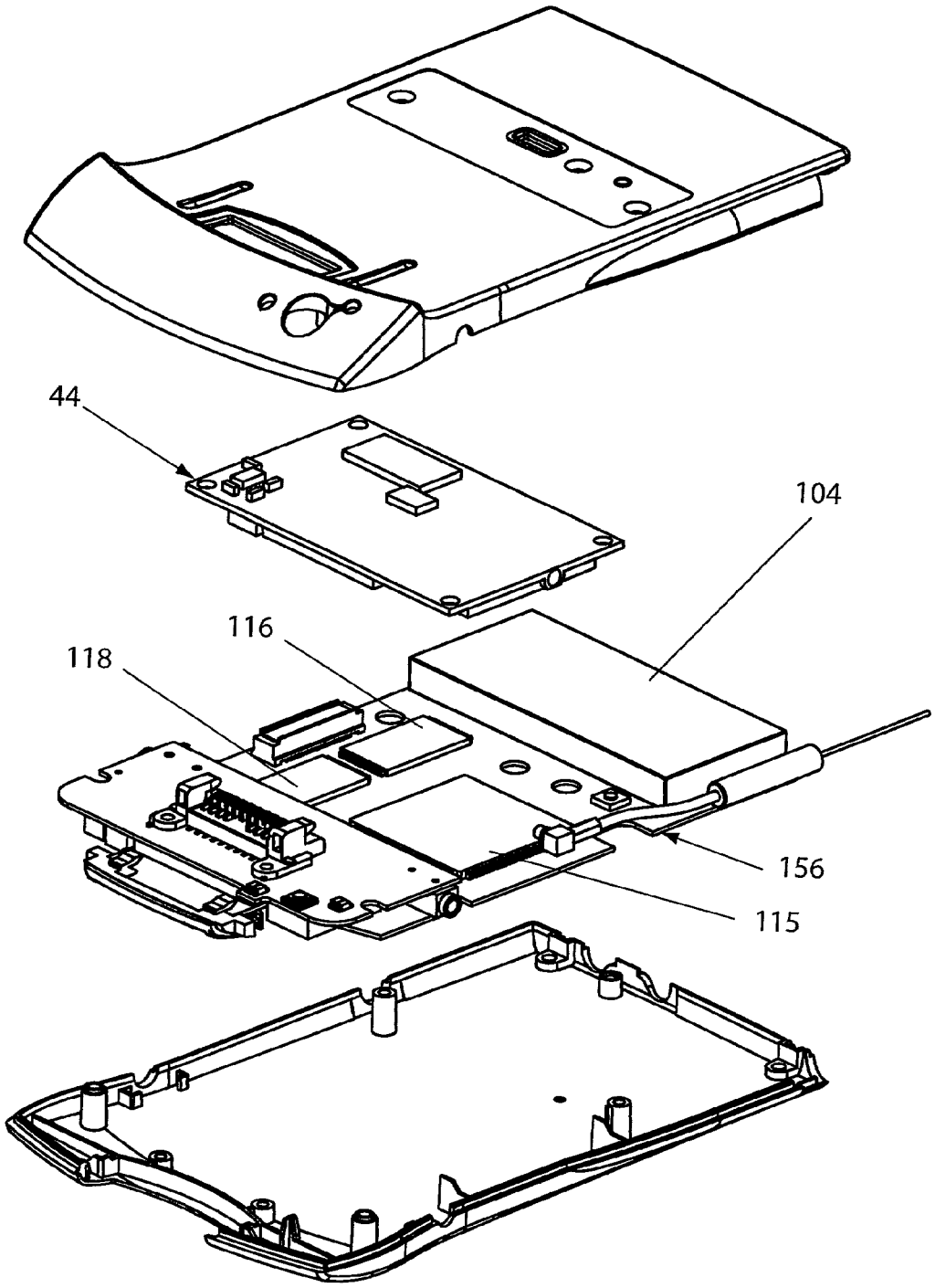

FIG. 4

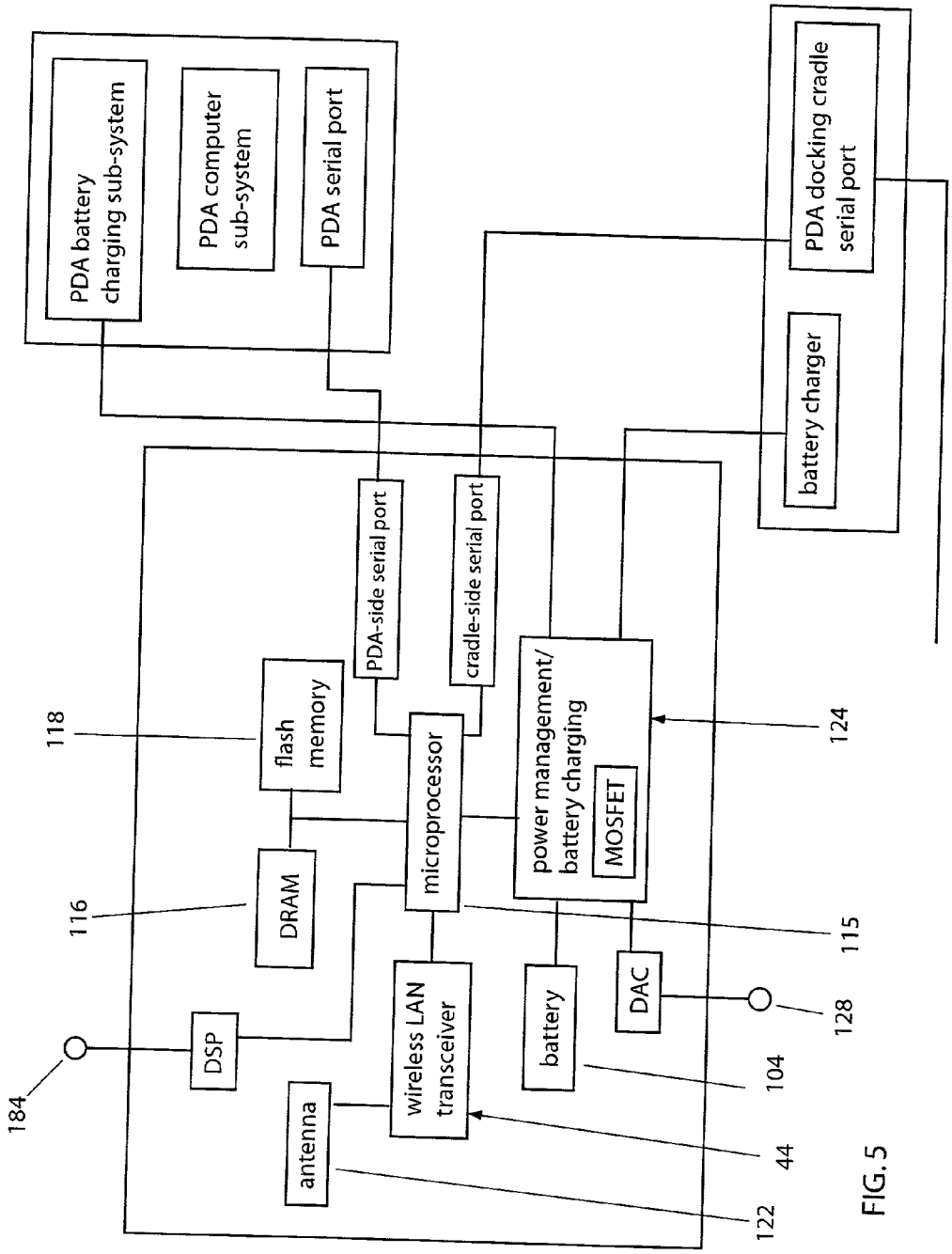
PDA battery charging sub-system
PDA computer sub-system
PDA serial port
PDA docking cradle serial port
battery charger
PDA-side serial port
cradle-side serial port
118
flash memory
microprocessor
power management/ battery charging
MOSFET
124
116
DRAM
115
DSP
wireless LAN transceiver
battery
DAC
128
184
antenna
104
44
122

FIG. 5

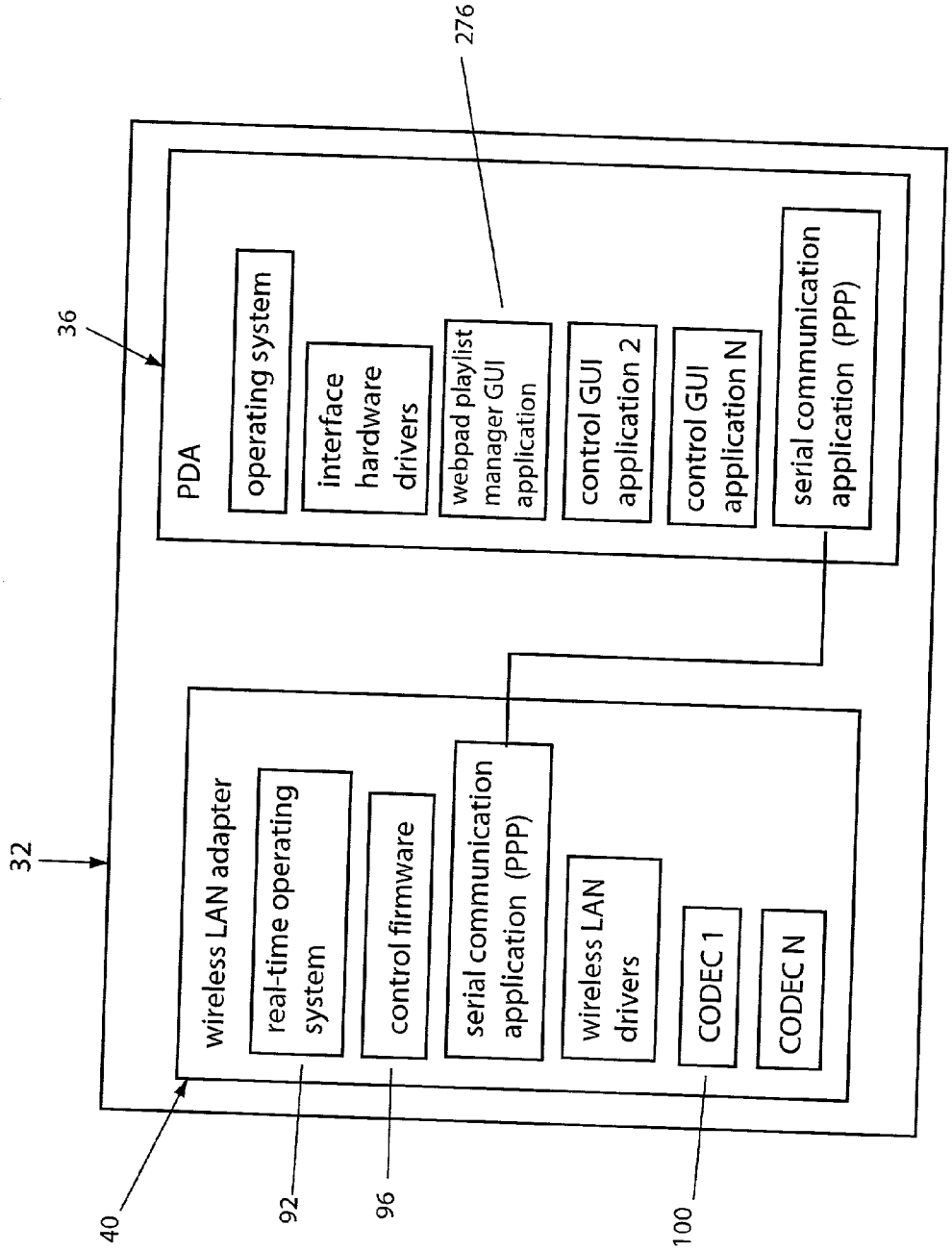
32
36
PDA
operating system
interface hardware drivers
webpad playlist manager GUI application
276
control GUI application 2
control GUI application N
serial communication application (PPP)
wireless LAN adapter
real-time operating system
control firmware
serial communication application (PPP)
wireless LAN drivers
CODEC 1
CODEC N
40
92
96
100

FIG. 6

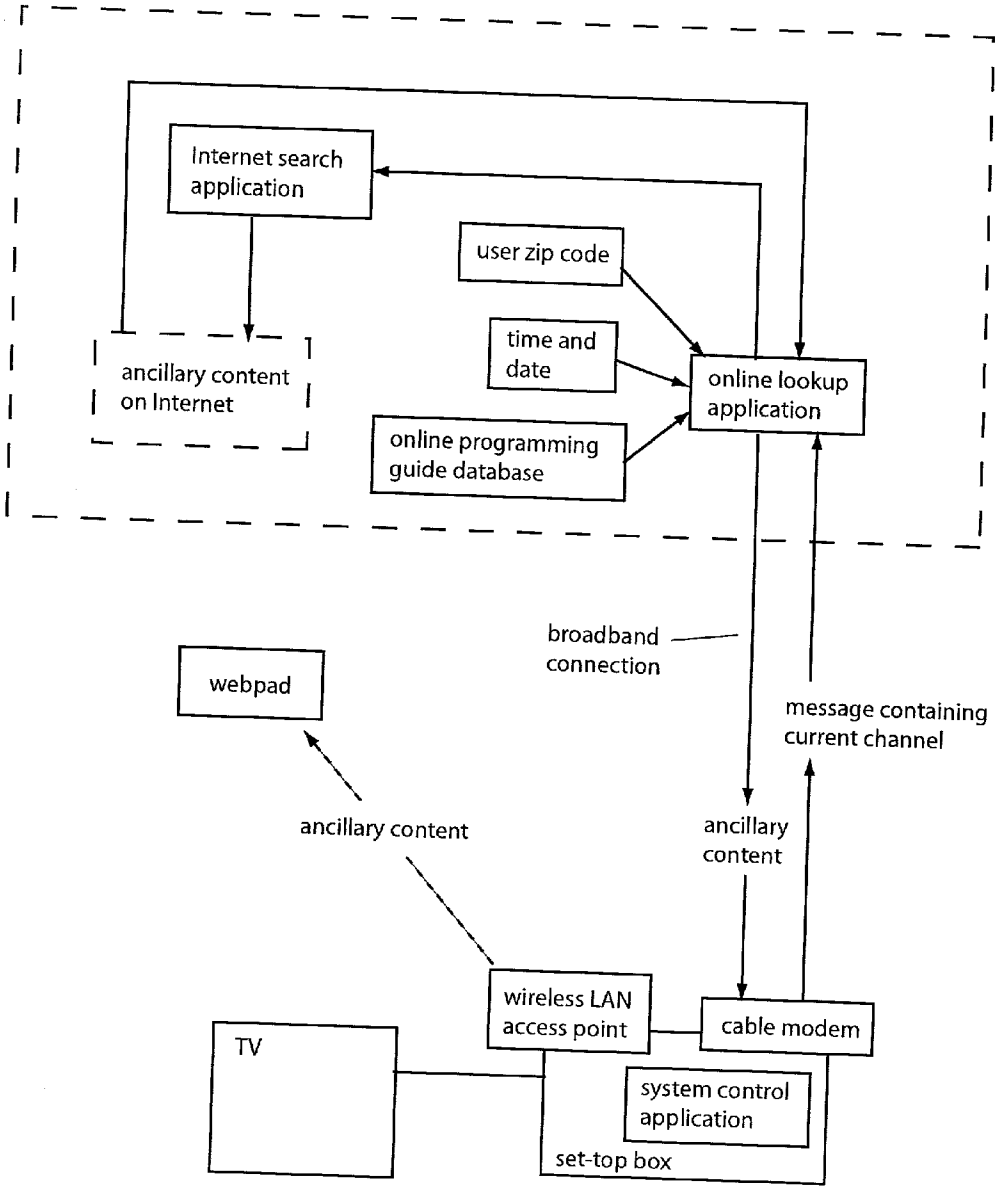
Internet search application
user zip code
time and date
online lookup application
ancillary content on Internet
online programming guide database
broadband connection
webpad
message containing current channel
ancillary content
ancillary content
wireless LAN access point
cable modem
TV
system control application
set-top box

FIG. 7

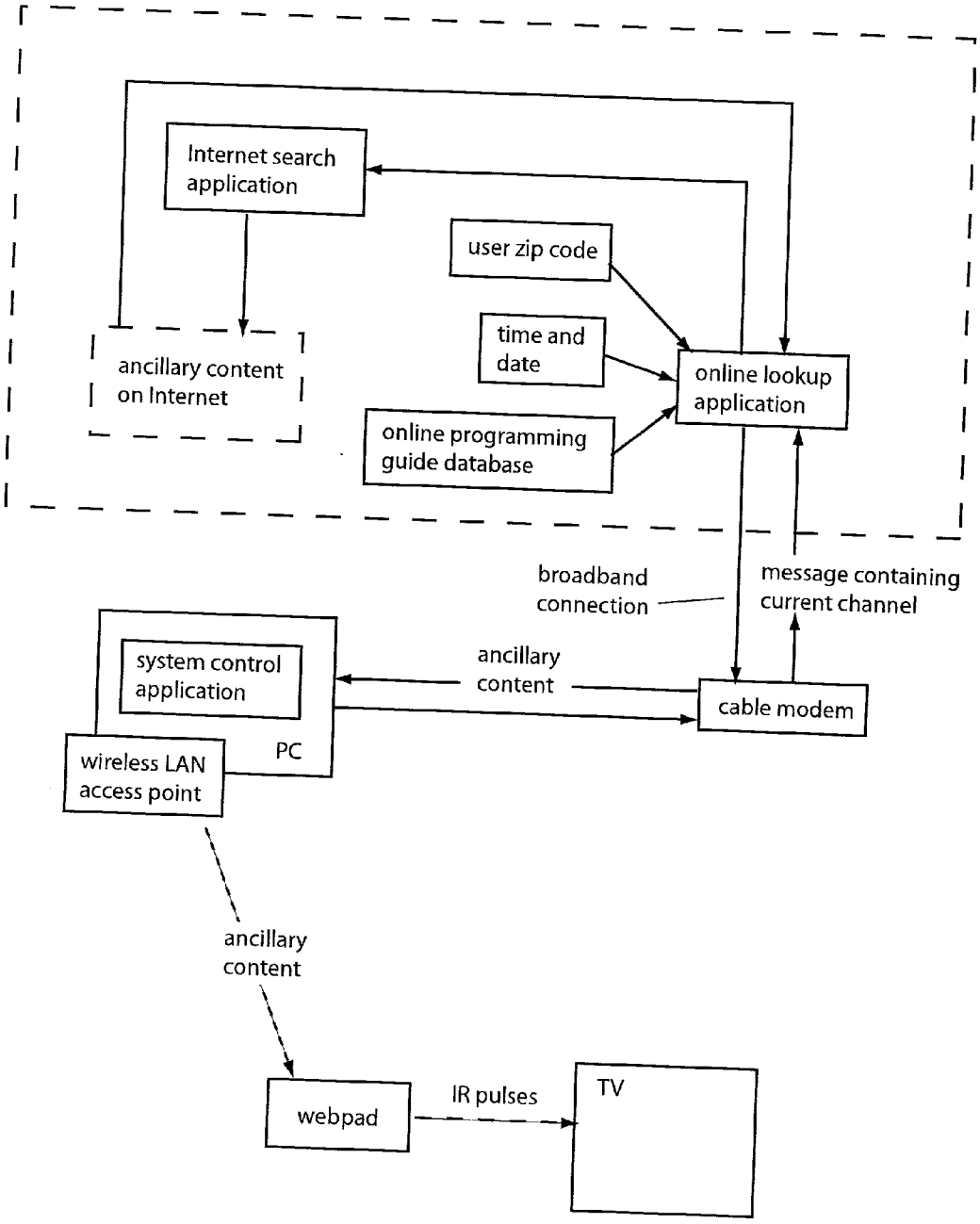
Internet search application
user zip code
time and date
online lookup application
ancillary content on Internet
online programming guide database
broadband connection
message containing current channel
system control application
ancillary content
cable modem
PC
wireless LAN access point
ancillary content
webpad
IR pulses
TV

FIG. 8

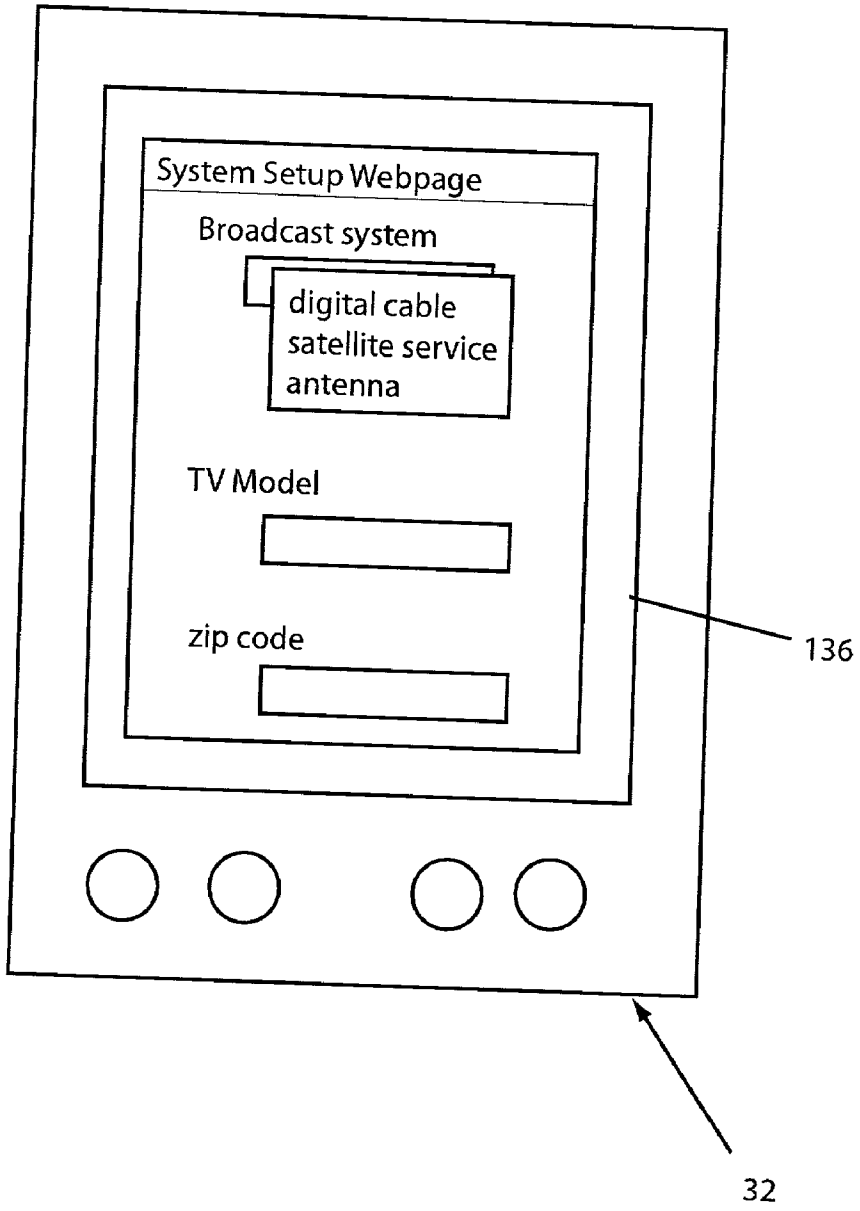
System Setup Webpage
Broadcast system
digital cable
satellite service
antenna
TV Model
zip code
136
32

FIG. 9

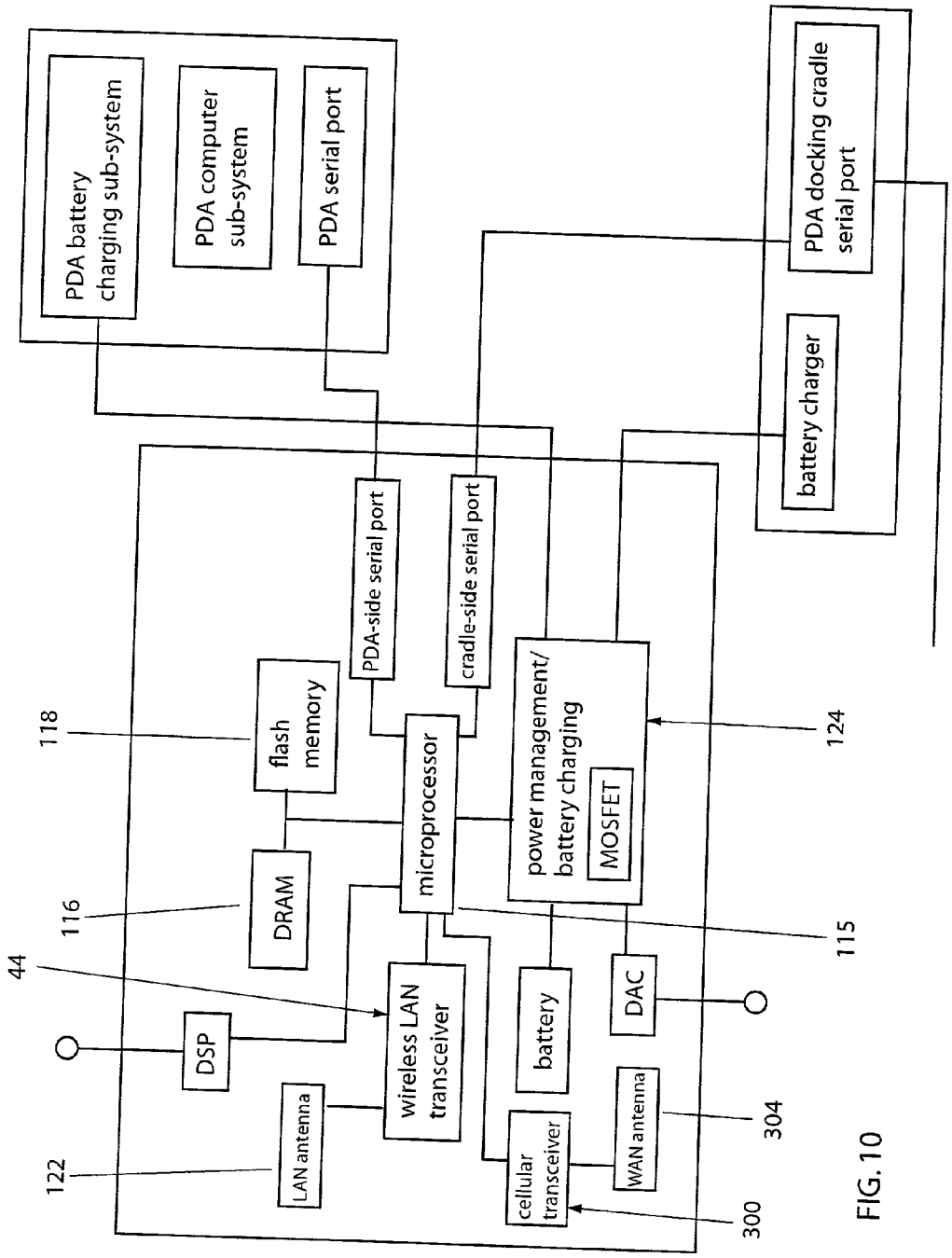
PDA battery charging sub-system
PDA computer sub-system
PDA serial port
PDA docking cradle serial port
battery charger
PDA-side serial port
cradle-side serial port
118
flash memory
microprocessor
power management/ battery charging
MOSFET
124
116
DRAM
115
44
DSP
wireless LAN transceiver
battery
DAC
122
LAN antenna
cellular transceiver
WAN antenna
304
300

FIG. 10

WEBPAD AND METHOD FOR USING THE SAME

RELATED APPLICATIONS

[0001] This is a continuation-in-part of the following applications: U.S. application Ser. No. 09/946,946 entitled, "Webpad and Method for Using the Same", filed Sep. 4, 2001; U.S. Continuation-in-Part application Ser. No. 09/955,723 entitled, "Webpad and Method for Using the Same", filed Sep. 18, 2001; U.S. Provisional Application No. 60/230,084, filed Sep. 5, 2000, entitled "Home PC to PDA Data Transfer System"; U.S. Provisional Application No. 60/233,839, filed Sep. 19, 2000, entitled "Real-time Interactive TV System"; and U.S. Provisional Application No. 60/284,352, entitled "Home PC to PDA Data Transfer System", filed Apr. 17, 2001, all commonly assigned herewith.

FIELD OF THE INVENTION

[0002] The present invention relates generally to the field of personal digital assistants, and more particularly, to a webpad.

BACKGROUND

[0003] The rapid buildup of telecommunications infrastructure combined with substantial investment in Internet-based businesses and technology has brought Internet connectivity to a large segment of the population. Recent market statistics show that a majority of households in the U.S. own at least one personal computer (PC), and a significant number of these PCs are connected to the Internet. Although the majority of household PCs are connected to the Internet by dialup modem connections, broadband connectivity is being rapidly adopted, and is decreasing in price as a variety of technologies are introduced and compete in the marketplace. A large majority of households in the U.S. and Europe are viable for at least one or more type of broadband connection, such as cable, DSL, optical networks, fixed wireless, or two-way satellite transmission.

[0004] The rapid proliferation of low-cost processing power and Internet connectivity has driven the availability and popularity of digital content. Digitization combined with compression technology produces content that is small and portable. Consumer enthusiasm for digital audio files such as MP3-formatted content is a prime example of the trend toward content digitization, enabling consumers to efficiently share audio files that they have digitized from CDs. The creation and transfer of digital audio is now understood and desired by millions of consumers. The MP3 digital audio format is an audio encoding technology that allows consumers to further compress digital audio files such as those found on Compact Disks, to much smaller sizes with very little decrease in sound quality. PC-based MP3 software players have been created that provide a convenient graphical user interface and software decoding of MP3 files. Some technology allows users to play MP3 files on their PC, using an existing sound card with external speakers. However, to listen to MP3s the user must interface with the PC, using a mouse and keyboard, and must be nearby the PC sound output equipment.

[0005] Other content mediums are trending toward digitization. The processing and sharing of digital images is expected to increase geometrically as digital cameras gradually replace conventional film chemistry. Electronic texts (eBooks) are another example of how digitization enables more efficient and varied transfer of content. As system bandwidth increases, it is only a matter of time before digital video transport is as common as audio is now. Additionally, interactive multimedia (Flash and Shockwave) will increasingly be made available to end users with PCs.

[0006] A market for home networking technology has emerged, driven by the need to share an Internet connection between two or more PCs, and to connect all the PCs to productivity peripherals. There has been innovation in local area network (LAN) technology based on end-user desire for simplicity and ease of installation. The Home Phoneline Networking Association (HPNA) promotes networking products that turn existing phone wiring in the home into an Ethernet physical layer. Existing HPNA products provide data-rates equivalent to 10base-T Ethernet, approximately 10 Mbps. Networking technology that uses the AC power wiring in the home to carry data signals has also appeared. Similar to HPNA devices, adapters are required to convert data signals from devices into voltage fluctuations carried on to and off of the AC wires, allowing any AC outlet to become a network interface.

[0007] Wireless radio-frequency (RF) LAN technology has also been introduced into the home networking market. Theoretically, wireless technology is the most convenient for the end user to install. Two prevalent standards for wireless networking are Institute of Electrical and Electronics Engineers (IEEE) 802.11b and HomeRF. Both of these systems utilize the unlicensed 2.4 Ghz ISM band as the carrier frequency for the transmission of data. Both of these technologies have effective ranges of approximately 150 feet in a typical household setting. In addition to utilizing Transmission Control Protocol/Internet Protocol (TCP/IP) protocols, IEEE 802.11b and HomeRF include additional encryption and security protocol layers so that the user's devices have controlled access to data being sent through the LAN.

[0008] Although there is a significant installed base of PCs with access to large volumes of digital content via Internet connectivity, the value of that content is limited when it can only be experienced at the PC.

[0009] Portable digital audio playback devices have been developed that are significantly smaller than portable CD players because they contain no moving parts, only flash memory, a microprocessor for decoding MP3 compressed audio content, and batteries. However, the cost per bit of audio content with portable digital audio playback devices is still very high because of the high cost of flash memory. The typical portable digital audio playback device includes enough flash memory to store about one CD's worth of digital music. The result is that the user is burdened with having to continually manually change the music files in the device by plugging the device into the PC and operating a user interface, if they want to listen to a wide range of music.

[0010] PDAs and other portable handheld computers have achieved widespread market acceptance due to the valuable data manipulation, access, and storage functionality available in conveniently portable form factors. The innovation of pen-based user interfaces in combination with various types of character recognition technology has also been a factor in the high adoption rate of PDAs. The Palm Pilot® in particular has advanced the state of the art of handheld

computing by offering a small, light form factor with an effective character recognition application called Graffiti®. The Palm Pilot® uses the PalmOS® operating system The Palm Pilot® is manufactured by Palm Computing, Inc. Other small form factor PDAs are available, such as the iPaq®, manufactured by Compaq Computer, Inc. Casio, Inc. offers the Cassiopeia®.

[0011] What is required is a system that allows a user to access all of the digital content and information services without being forced to sit at a PC.

SUMMARY OF THE INVENTION

[0012] A webpad and method for using the same are provided. In one embodiment, information is determined about primary content being played on an audio device using a computer system Ancillary data is obtained relating to the primary content based on the information about the primary content. The ancillary data is automatically sent to the webpad for access therefrom as the primary content is being played on the audio device.

BRIEF DESCRIPTION OF THE DRAWINGS

[0013] The present invention will be understood more fully from the detailed description given below and from the accompanying drawings of various embodiments of the invention, which, however, should not be taken to limit the invention to the specific embodiments, but are for explanation and understanding only:

[0014] **FIG. 1** shows a schematic of one embodiment of the wireless webpad system;

[0015] **FIG. 2** shows an isometric view of one embodiment of a webpad that is a PDA attached to a wireless LAN adapter;

[0016] **FIG. 3** shows an isometric view of one embodiment of a wireless LAN adapter;

[0017] **FIG. 4** shows an exploded view of one embodiment of a wireless LAN adapter;

[0018] **FIG. 5** is a block diagram of one embodiment of the electronic components in the wireless LAN adapter;

[0019] **FIG. 6** is a block diagram of one embodiment of the software components in the wireless webpad;

[0020] **FIG. 7** is a block diagram of one embodiment of an interactive TV system using a set-top box;

[0021] **FIG. 8** is a block diagram of one embodiment of an interactive TV system using a PC;

[0022] **FIG. 9** is a view of one embodiment of a graphical user interface on webpad; and

[0023] **FIG. 10** is a block diagram of one embodiment of a wireless LAN adapter hardware with both LAN and WAN transceivers.

DETAILED DESCRIPTION

[0024] A webpad and method for using the same are described. In the following description, for purposes of explanation, numerous specific details are set forth in order to provide a thorough understanding of the present invention. It will be apparent, however, to one skilled in the art that the present invention can be practiced without these specific details. In other instances, well-known structures and devices are shown in block diagram form in order to avoid obscuring the present invention.

[0025] A set of definitions is provided below to clarify the present invention.

Definitions

[0026] Personal Digital Assistants (hereafter PDAs) are defined as the category of computers that are small enough to be comfortably held in one hand, and that contain software applications that are used for personal organization, productivity, and communication. The PDA category includes handheld computers, including single-housing devices such as the Palm Pilot, which have a two-piece clam-shell plastic housing with an integral display. PDAs of this variety include an LCD that allows the user to write on it with a stylus, or otherwise control and manipulate the software and stored content on the PDA. There are also hinged designs for PDAs that are similar in configuration, although much smaller than, portable notebook computers. In this configuration, one housing contains the microprocessor, memory, batteries, and small keyboard, and the other housing contains an LCD.

[0027] A network is one or more computer devices of any type, such as a personal computer (PC), network appliance, or PDA, connected together by a data transfer link. A PDA that has a communication link to the Internet is often referred to as a node. A node (point of interaction with the Internet) on the network can potentially communicate, i.e., send or receive data to any other node (electronic device) on the network. Networks may be physically wired or they may be wireless.

[0028] The Internet is used interchangeably with the term web or worldwide web. Both of these are defined as the worldwide network of PCs, servers, and other devices.

[0029] A CCD (charged coupled device) is a semiconductor technology used to build light-sensitive electronic devices such as cameras. Each CCD chip consists of an array of light sensitive photocells that, in conjunction with a lens, can be used to capture both still shots and moving pictures. CCD technology is well known in the field of digital image acquisition and will not be described in detail here for reasons of brevity.

[0030] Broadband connection is defined as a communications network in which the frequency bandwidth can be divided and shared by multiple simultaneous signals. A broadband connection to the Internet typically provides minimum upstream and downstream data-rates of approximately 200K or more bits per second. There are many different types of broadband connections including DSL, cable modems, and fixed and mobile wireless connections.

[0031] A Data Over Cable System Interface Specification (DOCSIS) modem is an industry standard type of cable modem that is used to provide broadband access to the Internet over a coaxial cable physical layer that is also used for the delivery of cable TV signals (CATV). DOCSIS modems are well known in the telecommunications industry and will not be described here in detail.

[0032] A Digital Subscriber Line (DSL) modem is also an industry standard type of modem that is used to provide

broadband access to the Internet, but over conventional copper phone lines (local loops). DSL modems are well known in the telecommunications industry and will not be described here in further detail.

[**0033**] The term gateway, used interchangeably with broadband gateway, is defined as an integral modem and router, and may include hub functionality. The modem function is used to change voltage fluctuations on an input carrier line (a DSL line input or a cable TV input) into digital data.

[**0034**] Routers are devices that connect one distinct network to another by passing only certain IP addresses that are targeted for specific networks. Hubs allow one network signal input to be split and thus sent to many devices.

[**0035**] Gateway storage peripheral is defined as an add-on storage device with processing power, an operating system, and a software application that manages the downloading and storage of data. An example scenario for the use of a gateway storage peripheral is a system where a user has a DOCSIS modem and would like to add an always-on storage capability. The gateway storage peripheral is connected to the DOCSIS modem via a USB port or an Ethernet port in the DOCSIS modem. A gateway storage peripheral in combination with a DOCSIS modem or any type of broadband modem is considered a storage gateway system. A PC that is always left on and connected to an always-on gateway with a DSL or broadband cable connection is considered a storage gateway system.

[**0036**] The term "message" is defined as information that is sent digitally from one computing device to another for various purposes. The term "content" is used to mean the information contained in digital files or streams. For example, content may be entertainment or news, or audio files in MP3 format. "Data" is used to mean information such as digital schedule contents, responses from devices sent back through the system, or digital messages and email. "Content" and "data" are sometimes used interchangeably. "Client devices" are those devices that are not fully functional without a host device such as a personal computer.

[**0037**] Local Area Network (LAN) is defined as a network structure that includes two or more devices that can communicate with other devices utilizing a shared communication infrastructure, including wired network technologies, such as Ethernet, or wireless network technologies such as Institute of Electrical and Electronics Engineers (IEEE) 802.11b or HomeRF technology. Wireless LAN technology such as IEEE 802.11b and HomeRF are based on the unlicensed 2.4 Ghz ISM (Industrial, Scientific, and Medical) frequency band. These networking technologies utilize Transmission Control Protocol/Internet Protocols (TCP/IP) protocols.

[**0038**] A LAN typically constitutes a group of interconnected devices that share a common geographic location and are typically grouped together as a subnet. A local network, for example, would be a home network where several computers and other smart devices would be digitally connected for the purpose of transferring content and data, controlling each other, sharing programming, or presenting data and content to a user.

[**0039**] CODEC (Compression/Decompression algorithm) is a software application that is used to decode (uncompress) encoded (compressed) media files or streams. Most content is stored and sent in a compressed format so that the content files are smaller and thus take up less storage space and use less bandwidth when being transferred via the Internet. The content is then decoded at the playback device. For example, MP3 audio files are encoded and must be decoded by a microprocessor running the codec in order for the audio content to be presented to the user in an analog format.

[**0040**] HTTP is Hyper-text transfer protocol, the protocol used by Web browsers and Web servers to transfer files, such as text and graphic files. Data-rate is defined as the data throughput of a telecommunications system or technology, and is measured in a quantity of bits per second, such as millions of bits per second (Mbps).

Overview of Operation

[**0041**] Referring now to **FIG. 1**, the fundamental operation of the wireless webpad **32** system involves LAN transmission of digital content and services from a local server that is a PC in one embodiment. Content and communication services are received via PC but can originate on the Internet **8**, using the PC as a proxy server. Wireless webpad **32** receives the digital content and communications and processes it in various ways.

[**0042**] In one embodiment, webpad **32**, shown in **FIG. 2**, is a PalmV PDA **36** manufactured by Palm Computing. The PDA **36** is attached to a wireless LAN adapter **40**. The PC is also functionally connected via a USB connection to a wireless radio frequency (RF) LAN access point **28**, such that digital content from PC is transmitted to nodes on the LAN **48**.

The Function of the PC and Broadband Connection in the System

[**0043**] In one embodiment, the function of PC in the wireless webpad **32** system is to acquire, store, manage, and serve digital content and interactive services to wireless webpad **32**. Digital content is stored on PC hard disk drive **56**. PC gains access to digital audio and video content several ways. In one embodiment PC is also connected to Internet **8** via a broadband cable modem **16**. Thus PC has access via content services to downloadable digital audio files such as MP3 formatted audio files, MPEG-2 and MPEG-4 video files, as well as digital audio and video streams from Internet **8** servers.

[**0044**] In one embodiment, the user can also manually convert CD audio files into MP3 files, a process known as "ripping". PC can also route Internet **8** streams of content to webpad **32**. In other embodiments, PC is connected to Internet **8** through a dial-up modem connection to an ISP, or Digital Subscriber Line (DSL), or a fixed wireless broadband connection.

Discussion of Wireless LAN Adapter **40**'Mechanical Description

[**0045**] As shown in **FIG. 2**, PDA **36** docks with wireless LAN adapter **40** with a spring loaded mechanical attachment that includes a latch hook **284**. The latch hook **284** is shown in **FIG. 3**. In one example where the PDA **36** is a Palm, and Palm Computing provides a reference design for connecting to the PalmV with the use of a small slot on the bottom side

of the PalmV housing. PDA **36** is released from wireless LAN adapter **40** by pressing button **176**. Electrical contacts on the rear end of PDA **36** make contact with electrical contacts on wireless LAN adapter **40** in order to establish a data communication link.

[**0046**] **FIG. 3** shows wireless LAN adapter **40** without PDA **36** attached. In one embodiment, the lower part of wireless LAN adapter **40** has the same shape as the lower part of PDA **36**, and includes the same electrical contacts as PDA **36** electrical contacts in order to fit in to and utilize the existing PDA **36** docking cradle. By placing PDA **36** attached to wireless LAN adapter **40** into PDA **36** docking cradle, both the PDA **36** battery and the battery **104** included in wireless LAN adapter **40** are alternatively charged.

[**0047**] Referring now to **FIG. 4**, an exploded view of wireless LAN adapter **40** shows a typical two-piece plastic shell construction as well as other components. Internal hardware components include a motherboard **156** that contains the electronic components that constitute the functional data-manipulating aspect of the device.

[**0048**] Electrical Description

[**0049**] **FIG. 5** shows a block diagram of the electrical components in wireless LAN adapter **40**. Motherboard **156** electrically connects components including a microprocessor **115**, dynamic memory (DRAM) **116**, programmable (flash) memory **118**, a power regulation and battery charging sub-system **124**, a digital signal processor (DSP), battery **104**, a headset jack **184**, and a stereo audio out jack **128**. A wireless LAN transceiver **44** is functionally connected to motherboard **156**.

[**0050**] In one embodiment, wireless LAN adapter **40** also includes a digital-to-analog converter (DAC) for converting the uncompressed digital information into analog signals that are presented at the stereo audio out jack **128**. Microprocessor **115** in combination with DRAM memory **116** executes instructions from the real time operating system **92** and control firmware **96**. In an alternative embodiment, wireless LAN adapter **40** includes a charge-coupled device (CCD) chip and a lens, the function of which will be explained later in this disclosure.

Description of Wireless LAN Transceivers (Card in LAN Adapter)

[**0051**] Wireless LAN transceivers **44** are capable of sending and receiving data using radio frequencies via a wireless data transfer protocol. Technology for such a LAN is currently available and includes the Symphony wireless networking access point provided by Proxim, Inc. LAN systems such as this are based on RF modulation centered on the 2.4 GHz frequency band. Such LANs have a practical range of approximately 150 feet and are capable of reaching most areas in an average sized house were webpad **32** might be located.

[**0052**] In another embodiment, the wireless LAN access point **28** is a PCI card that is located internal to the PC, with an external antenna **122**. In another embodiment, the wireless LAN communication link is provided using IEEE 802.11b protocols. In another embodiment wireless, LAN communication link is provided using Bluetooth protocols.

Wireless Webpad Software and Functionality

[**0053**] Wireless webpad **32** functions are the combined functions of PDA **36** and wireless LAN adapter **40**. **FIG. 6** is a block diagram of the location of various software functions in wireless webpad **32**. PDA **36** is used primarily for its user-interface capabilities. Many functions require the computer processing power of wireless webpad **32**. For example, microprocessor **115** in combination with DAC and CODEC **100** in wireless LAN adapter **40** is capable of decoding digital audio files. Microprocessor **115** in combination with DSP and a microphone input is capable of digitizing sound inputs.

Device Software—CODECs

[**0054**] In one embodiment, wireless LAN adapter **40** includes the Fraunhofer CODEC in wireless LAN adapter **40**, licensed for use by Thomson Electronics for decoding the digital audio file that is streamed to it from PC. CODEC **100** is an executable file stored in memory, launched by control firmware **96**, executed by real time operating system **92** running on wireless LAN adapter **40**. Wireless LAN adapter **40** may store a multiple CODECs in memory **118** in wireless LAN adapter **40** for decoding variously formatted digital audio files that may be selected by the user. For example, the WindowsMedia CODEC, provided by Microsoft may be stored in memory **118** at wireless webpad **32**.

Software Module—System Control Application **64**

[**0055**] **FIG. 1** lists the software components of wireless webpad **32** system that are included at PC. **FIG. 6** lists the software elements of wireless LAN adapter **40** and PDA **36**.

[**0056**] The system control application **64** is software executing on PC that manages communication and streaming from PC to wireless webpad **32**. System control application **64** includes a server module **76** that is a Java application. System control application **64** also includes a database module **68** that is written to or accessed by server module **76**, and a series of graphical user interface (GUI) modules, that provide user interfaces for setting up content to be accessed by or streamed to wireless webpad **32**, as well as other devices on the LAN. One instance of GUI module is a Windows application that runs on PC. Another instance of GUI module is a native application for PDA **36** operating system

[**0057**] An example of webpad **32** GUI is the webpad playlist manager GUI application **276** that features a three-level nested list structure for organizing digital audio content. The three levels are labeled as channels, playlists, and tracks. Channels are lists of playlists, and playlists are lists of tracks. Track is a GUI representation of a locally cached digital audio file or a digital audio stream from Internet **8**. Audio content services are also available through online services accessed through a browser interface on webpad **32**. The online digital audio files associated with online playlist titles in the online playlists are streamed to wireless webpad **32** via PC and wireless LAN communication link. Server module **76** includes software that interfaces with the protocols of each online audio service provider to allow online playlists to be downloaded and transferred into database module **68**. Thus, playlist structures and playlist titles created online using the web-based content selection guide are available and can be interacted with by the user with the webpad playlist manager GUI application **276** running on wireless webpad **32**.

Software Functions—Communication/Message Processing

[0058] The communication and control functions of the wireless webpad **32** system will now be described. In one embodiment, a user may use wireless webpad **32** GUIs to control the function of wireless webpad **32** and other client devices connected to the system

[0059] For example, the user makes selections on webpad playlist manager GUI application **276** using the stylus with the touch screen LCD **136**. These interactions are processed by the microprocessor **115** and operating system in PDA **36**, and messages are sent to control firmware **96** in wireless LAN adapter **40** via the serial port interface. These messages are then converted into XML-based messages and sent via HTTP requests to system control application **64** on PC via wireless LAN. These messages are interpreted by server module **76** running on PC and specific actions are initiated. Applications enabled by the wireless webpad **32** system are discussed below.

System Function—Local Browsing

[0060] System control application **64** includes server module **76** that operates as a server for webpad **32**. A database of information can be maintained on PC such as yellow pages directories, white pages directories, TV Guide, and the like. Database module **68** stores the locations of the local content files. Because of the speed of LAN, access to this information is very fast. In this embodiment PDA **36** GUI is a browser that accesses the server with HTTP requests.

System Function—Internet **8** Browsing

[0061] Server module **76** also acts as a router and network address translator, allowing the user to use the browser application on the PDA **36** to access web pages on Internet **8**. The browser application on PDA **36** can receive world wide web URLs entered by the user, and server module **76** will route these requests through to the wide area connection, such as a broadband Internet **8** connection. The responses back from Internet **8** are routed through to webpad **32**.

System Function—Streaming Audio

[0062] An aspect of control firmware **96** on wireless LAN adapter **40** in combination with webpad playlist manager GUI application **276** on the PDA **36** provides the ability to initiate and control a real-time digital audio or video stream from server module **76** on PC. Webpad playlist manager GUI application **276** on PDA **36** also provides the standard controls for starting, stopping, pausing, progressing to the next track, and the like. These controls are GUI elements on the touch screen LCD **136**. The user activates the control GUI elements with the stylus.

[0063] The interaction of control firmware **96** with server module **76** provides a buffer management function that controls the flow of portions of the digital audio file from PC into a local DRAM memory of wireless webpad **32**. The buffer management function insures that the local DRAM memory buffer is filled as the contents of DRAM are decoded by microprocessor **115** executing CODEC **100**. DAC converts the decoded digital audio into analog signals that are presented at the head phone jack **128** on wireless LAN adapter **40**. The user listens to the audio stream using a stereo headset plugged into earphone jack **128**.

System Function—Real-Time Interactive TV Synchronization Mode

[0064] There are two embodiments for providing interactivity between webpad **32** and a TV. In one embodiment, the system control application **64** is run on PC. In another embodiment, the system control application **64** can run on a set-top box that includes a digital cable converter and a DOCSIS cable modem, as well as a wireless LAN access point.

[0065] In the set-top box scenario, as shown in **FIG. 7**, system control application **64** receives information as to the current cable channel that the digital cable converter is tuned to. The set-top box makes the currently playing content channel available to system control application **64**. System control application **64** sends a message containing the current channel via Internet **8** connection integral to the set-top box to an online lookup application.

[0066] In one embodiment, the online lookup application in combination with an online programming guide database, a function for obtaining the current time and date, and location information regarding the user, such as zip code, obtains a text description of the currently playing content. The online programming guide database is a searchable database of the broadcast programming schedule for all broadcast mediums, such as terrestrial, cable, and satellite broadcasts. The user has an online account with the service/set-top box provider so that zip code information is accessible.

[0067] In an alternate embodiment, an Internet **8** search function is used to gather ancillary content links, defined as links to webpages that relate in subject matter to the text descriptors of the currently playing content. These ancillary content links are automatically sent to webpad **32** when TV synchronization mode is activated on webpad **32**. The result is that while watching a TV program such as movie or an advertisement, related links are immediately sent to webpad **32**.

[0068] Using the above example of ancillary content sent automatically to the webpad **32**, activation by the user of a GUI tag button displayed on webpad **32** LCD **136** that is associated with the ancillary content currently displayed on LCD **136**, results in the transmission of a message back through LAN informing system control application **64** that tag button was activated. Server module **76** then compiles and transmits tag message to a tag storage and processing server. The information in tag message is associated with the currently playing content and may include but is not limited to: metadata or meta-tags (ID3 data) included in the file or stream (characters or images); the file name if content is a file; the URL or IP address of the stream if content is a stream; time; date; and user identifier. Other ancillary content is then aggregated a web page that is accessible to the user of the system

[0069] In another embodiment, the system control application is operating on a PC. There are two methods for providing the current channel data to the system control application for the purpose of sending ancillary content links to webpad **32**.

[0070] Referring now to **FIG. 8**, webpad **32** includes an IR transceiver subsystem and is used to control the broadcast media channel on the TV. This is accomplished by the use of control firmware, a TV control GUI, and the associated IR pulse codes for the given TV.

[0071] **FIG. 9** shows a broadcast media system setup webpage that is accessed via webpad **32**, that enables the user to provide information regarding the model of cable-ready TV that is being used, as well the broadcast system that is being used, and the user's zip code. The system control application uses the model number of the cable-ready TV to obtain the pulse code for changing the cable channels on the TV from a pulse code database on the Internet **8**. The IR pulse codes for controlling the cable-ready TV are automatically downloaded into webpad **32**. The broadcast system and zip code are used by the online lookup application to derive the programming schedule for the system

[0072] Referring again to **FIG. 8**, when the user uses webpad **32** to change a channel, control firmware that is controlling the TV control GUI sends a message to PC with the current channel. In the initial setup of the TV control GUI, the actual channel number must be input by the user. System control application on TV in turn sends this information to the online lookup application, which operates as described above. The ancillary content webpage link is sent back through the system until it is pushed onto webpad **32** and automatically refreshed so that the user has immediate access to the ancillary content.

[0073] In an alternative embodiment, the other method in which the system control application can access the current channel data to be sent to the online lookup application is for the user to input the cable channel or actual name of the TV program into a webpage GUI on webpad **32**.

[0074] There are many applications that can operate using the elements and sequence of events described above. For example, users can engage in real-time interactive games, such as playing along with game show programs. In the case of interactive games, rather than ancillary content being sent back to webpad, pages are sent to webpad that are synchronized with a game that is being played. The pages contain questions that are the same questions as those being presented on the game show program Webpad **32** users can answer the questions using the webpad **32** user interface and send the answers back to the game show program synchronizing server.

[0075] Another embodiment of the real-time interactive TV mode is the ability to bid on TV auctions. In this embodiment, an auction can be broadcast via terrestrial cable or TV and users can respond using webpad **32**. The items to be bid upon are sent formatted as webpages to webpad **32**. Using a GUI, users input amounts to be paid into the GUI and trigger the response to be sent back to the auction server on Internet **8**.

[0076] In another embodiment, the interaction involves placing bets on various gambling activities including card games, horse races, and sporting events. Users use a GUI in a browser on webpad **32** to input amounts of bets. These bets are processed by a bet-processing server and the outcome of the game is sent back to webpad **32**.

[0077] In another embodiment, the interaction involves purchasing products or services by the use of a GUI on a webpage on webpad **32**. Webpages that are synchronized to the broadcast content are presented that include links or buttons for purchasing the product. If the user activates the "purchase" button, a message is sent back through the system to an e-commerce server and the user is notified that the purchase has been made.

System Function—Voice-Over-IP Mode

[0078] In one embodiment, wireless LAN adapter **40** includes DSP for digitizing audio inputs. A headset, which is a combination earphone and microphone, is plugged into headset jack **184** on wireless LAN adapter **40**. When a voice-over-IP call is initiated using a GUI on PDA **36**, DSP in concert with microprocessor **115** and control firmware **96** converts the analog voice signal into digital packets in real time and sends this information via LAN communication link to server module **76** on PC. Server module **76** on PC routes these packets to the appropriate voice-over-IP server on Internet **8**. It is assumed that Internet **8** voice-over-IP service is used. **FIG. 3** shows that wireless LAN adapter **40** includes an answer button **288** that is connected electrically to microprocessor **115** and allows convenient one-button activation when answering voice-over-IP calls. Volume up and volume down buttons are also included in wireless LAN adapter **40**.

System Function—Voice-Recording Mode

[0079] In one embodiment, DSP and microprocessor **115** constitutes a audio digitizing subsystem that can be used to digitize voice messages. A GUI on PDA **36** allows the user to initiate and stop a recording interval, similar to controls on many audio recording devices. As the recording is taking place, the audio signal is digitized and sent in large blocks that are re-constructed by system control application **64**. The resulting audio files are stored on PC, or can be sent other users as email attachments. The GUI on PDA **36** also includes an address book for selection the recipient of the audio message.

System Function—Image Data Transfer

[0080] Image data transfer occurs in two modes: still camera function and video camera function. In one embodiment, the wireless LAN adapter **40** includes a CCD chip and lens subsystem. The output of a CCD ship is a single frame or a sequence of frames that are an array of pixels. In still image transfer mode, one digital frame is sent to PC via wireless LAN communication link **48** and stored in database **68**. This digital image can be saved in a variety of standard image formats such as JPEG or TIFF formats. A GUI on PDA **36** provides for activation of the still image camera function.

[0081] In video camera mode, digital video frames are captured by the CCD subsystem and encoded in MPEG-4 format, and sent in real time via the wireless LAN communication link, to system control application **64**. A video compilation software application that is an element of system control application **64** appends these frames into an MPEG-4 video file. In an alternative embodiment, the MPEG-4 stream can be routed by the server module **76** to a server on the Internet **8** where the stream can be accessed by a third party. A GUI on PDA **36** allows for the starting and stopping of streaming video from wireless webpad **32**.

Network Device Control

[0082] In one embodiment, by connecting a network module to various other electronic devices, these devices become nodes in the LAN and can be manipulated by software on PC as well as with GUI control applications running on webpad **32**. Examples of other networked devices could include, but are not limited to, a television, stereo, oven, HVAC system, lights, video camera security systems, video baby monitors, and door locks, among others. LAN adapters connected to electronic devices differ according to the functions of each device but include a wired or wireless transceiver and other necessary control circuitry.

[0083] PC with wireless LAN access point **28** and system control application **64** is the fixed central controller for all these devices and can be used to perform various control functions such as on/off control. Webpad **32** is used as the portable central controller for these networked devices. In an example scenario, a user can use webpad **32** in concert with a wireless LAN video module that is pointed to an infant located in a house.

[0084] As another example, webpad **32** can be used to control a digital audio converter, a device that is a node on the LAN and is able to receive digital audio streams from PC, decode and convert the stream into analog signals that are plugged into any existing stereo system Webpad playlist manager GUI application **276** that is used to manage playlists and control streams into webpad **32** can be used to control audio content delivered to the digital audio converter. A GUI element in webpad playlist manager GUI application **276** allows the user to select either digital audio converter or webpad **32** as the target device for the audio stream.

[0085] In the embodiments where either webpad **32** or the digital audio converter is the target for the audio stream, a GUI tag button is displayed on LCD **136** as an aspect of webpad playlist manager GUI application **276**. When the GUI tag button is activated by the user, for example with a stylus, a message is transmitted back through the LAN informing system control application **64** that tag button was activated. Server module **76** then compiles and transmits tag message to a tag storage and processing server. The information in tag message identifies the audio content that was playing when the GUI tag button was activated. Ancillary content, or content that is associated with the currently playing content is aggregated on a web page that is accessible to the user of the system. This process is the same as the process described above for tagging audiovisual content.

Embodiment with Dual LAN and Cellular Transceivers

[0086] Another embodiment of webpad **32** includes a cellular transceiver chip set **300** and cellular antenna **304** that allows webpad **32** to use a cellular wide area network (WAN) to communicate with a remote server such as an Internet server, or Application Service Provider (ASP). A block diagram for one embodiment of a wireless LAN adapter hardware with both LAN and WAN transceivers is shown in **FIG. 10**. A cellular transceiver chip set **300**, such as the MC13760 Digital Transceiver IC, manufactured by Motorola, Inc. of Schaumburg, Ill., is used to send and receive data transmitted over conventional digital and analog cellular networks. In this embodiment webpad **32** is capable of communicating both with a LAN, or when out of LAN range, with a WAN. This enables webpad **32** to derive both the benefits of high speed LANs, and when out of LAN range, the broad location benefits of WANs. Software residing on webpad **32** allows both automatic or user-controlled determination of whether to use the LAN transceiver or WAN transceiver **300**. Automatic detection entails monitoring the strength of the signal detected by both transceivers and picking the master transceiver based on the stronger signal.

[0087] In one embodiment, a further use of webpad **32** as a device controller entails using the built in infrared (IR) capabilities on PDA **36***s*. Webpad **32** can use its IR transmitter to communicate directly with electronic devices with IR receivers such as televisions and stereos, or with an IR enabled amplifier module attached. The specific IR configurations for individual electronic devices can be downloaded from Internet **8** by PC, stored on PC and then sent to webpad **32**.

[0088] In an example scenario, webpad **32** is used to control the television. The user requests to use PDA **36** as a TV remote controller by making a selection to his effect on a GUI on webpad **32**. The makes selections on the AV control GUI on webpad **32** both to lower the volume of the TV and to watch a specific program being broadcast. Previously, webpad **32** downloaded the relevant IR configurations for the TV from Internet **8** through PC. Webpad **32** then transmits the IR data to the TV.

Alternative Embodiments

[0089] The wireless LAN adapter has several permutations that have not yet been explicitly mentioned but are implied: the module can include an external antenna **122**; the audio in/out jack and/or the stereo out jack and its associated function can be regarded as optional on the device; the CCD and its associated functions can be viewed as optional on the device; the IR capabilities and its associated functions on the PDA can be viewed as optional on the PDA; the IR capabilities and its associated functions can be incorporated directly into the wireless LAN adapter; the CCD and its related functions can be added to the system by attaching a CCD camera plug-on adapter module directly to the PDA (PDAs such as the Palm Pilot, manufactured by Palm Computing, and the Visor, manufactured by Handspring, offer optional CCD camera plug-on adapters); the wireless LAN adapter may include a conventional power jack and be recharged through a charging module unassociated with the PDA. Other permutations and embodiments exist that are not explicitly listed above.

Embodiment with PDA with Decoding Capability

[0090] PDAs such as the iPaq include microprocessors that are capable of decoding digital audio and video streams, as well the capability to store a quantity of digital content files in internal memory. In another embodiment, an iPaq includes a CompactFlash wireless LAN card and an integrated control and GUI software application that provides the capability of communicating with the system control application as well as all of the functions of the webpad described above.

Embodiment with Gateway Node

[0091] For example, another technique for providing an Internet connection to the webpad is to include a gateway

node, a device that is a wireless LAN to ethernet converter. The gateway node system is used when there is an existing Internet connection such as a DSL connection or a cable modem connection. An example system would include a broadband gateway that is also a hub, such as the Netopia 3100 router, made by Netopia. The Netopia router performs routing and hub functions in addition to other functions such as being a DHCP server (it dynamically serves up internet protocol addresses). The Netopia router has several physical connection ports. In one port it receives a connection to the Internet, such as a DSL connection. There are several other physical ports that are Ethernet ports. The gateway node in this case would convert Ethernet protocol to the wireless LAN protocol, and broadcast them. The gateway node alternatively receives RF signals from the webpad module and converts them to Ethernet protocol messages. By using a gateway node, the webpad assembly is capable of communicating with the Internet without the use of a home PC.

[0092] Depending on which PDA is used and how much computing power is available, various functions described above may be executed by the processor located in the wireless LAN adapter, or they may be executed by the processor in the PDA. Alternatively, both processors may share the computing load.

Alternative Embodiment—Wireless Connection to Streaming Player with Storage

[0093] In another embodiment, the wireless LAN adapter includes a large quantity of battery-backed up static RAM, or SRAM that allows the webpad to store a quantity of data. For example, the user selects a number of digital audio tracks on the PC using the GUI on the wireless webpad that are to be downloaded and stored on the webpad. The battery backed-up SRAM stores the files so the user can access and listen to the digital audio files while away from the wireless LAN communication link.

[0094] In another embodiment, the wireless LAN adapter may include a card slot for accepting CompactFlash memory cards. In this case, digital audio files transferred from the PC to the wireless webpad may be stored in CompactFlash memory, and the user may listen to the audio files beyond the vicinity of the LAN communication link.

[0095] A webpad and method for using the same have been described. Although the present invention is described herein with reference to specific embodiments, many modifications and variations therein will readily occur to those with ordinary skill in the art. Accordingly, all such variations and modifications are included within the intended scope of the present invention as defined by the following claims.

What is claimed is:

1. A method comprising:

streaming data from a computer system;

receiving the streamed data using a wireless interface of a communication adapter module of a personal digital assistant that is part of a webpad; and

playing the streamed data on the webpad while simultaneously receiving additional streamed data, wherein at least a portion of streamed data is ancillary data relating to primary data being played on an audio device.

2. The method of claim 1 further comprising:

obtaining the data prior to streaming from a location using an application on the computer system.

3. The method of claim 2 wherein the application is a system control application on the computer system.

4. The method of claim 3 wherein the location is Internet.

5. The method of claim 3 wherein the location is a database on the computer system.

6. The method of claim 1 further comprising:

inputting information using a user interface on the webpad to specify the data that is to be streamed from the computer system.

7. The method of claim 1 further comprising:

manipulating the audio device using the webpad via wireless transmission.

8. A method of transferring ancillary data to a webpad comprising:

determining information about primary content being played on an audio device;

obtaining the ancillary data relating to the primary content based on the information; and

automatically sending the ancillary data to the webpad for access therefrom as the primary content is being played on the audio device.

9. The method of claim 8 wherein determining information about primary content being played on the audio device further comprises:

inputting the information on a user interface on the webpad; and

sending the information to a first application on the computer system.

10. The method of claim 9 wherein obtaining the ancillary data relating to the primary content based on the information includes accessing the ancillary data using a second application on the computer system.

11. The method of claim 10 wherein the first application is a system control application.

12. The method of claim 11 wherein the second application is an online lookup application.

13. The method of claim 8 wherein the ancillary data includes a text description of the primary content being played on the audio device.

14. The method of claim 8 wherein the ancillary data is additional data relating to the primary content being played on the audio device.

15. The method of claim 8 wherein the audio device is an audio converter device.

16. The method of claim 8 wherein the audio device is a stereo.

17. A system comprising:

a local area network (LAN);

a webpad communicably coupled to the LAN and including an adapter module attached to a personal digital assistant; and

a computer system coupled to the LAN, wherein the computer system streams audio data to the adapter module via a wireless transmission.

18. The system of claim 17 wherein the computer system includes a system control application to determine information about primary content being played on an audio device.

19. The system of claim 18 wherein the computer system includes an online lookup application to obtain ancillary data relating to the primary content based on the information about the primary content.

20. The system of claim 19 wherein the ancillary data includes a text description of the primary content being played on the audiovisual device.

21. The system of claim 19 wherein the ancillary data is additional data relating to the primary content being played on the audiovisual device.

22. The system of claim 17 wherein the adapter module includes a wireless transceiver.

* * * * *