US006526287B1

(12) **United States Patent**
Lee

(10) **Patent No.: US 6,526,287 B1**
(45) **Date of Patent: Feb. 25, 2003**

(54) **CELLULAR PHONE CAPABLE OF ACCOMMODATING ELECTRONIC DEVICE**

(76) Inventor: **Eun-Bok Lee**, Bundang-dong 74, Bundang-ku, Seongnam-city, Kyungki-do (KR)

(*) Notice: Subject to any disclaimer, the term of this patent is extended or adjusted under 35 U.S.C. 154(b) by 212 days.

(21) Appl. No.: **09/612,765**

(22) Filed: **Jul. 10, 2000**

(30) **Foreign Application Priority Data**

Mar. 22, 2000 (KR) 00-14591

(51) **Int. Cl.**[7] **H04B 1/38**; H04M 1/00

(52) **U.S. Cl.** **455/556**; 455/572; 455/575; 379/447

(58) **Field of Search** 455/575, 556, 455/557, 127, 175, 572; 379/454, 446, 447

(56) **References Cited**

U.S. PATENT DOCUMENTS

5,335,276 A * 8/1994 Thompson et al. 379/357.01
5,373,149 A * 12/1994 Rasmussen 235/487
5,535,274 A * 7/1996 Braitberg et al. 379/426
5,628,055 A * 5/1997 Stein 375/222
5,822,427 A * 10/1998 Braitberg et al. 340/7.63
5,903,850 A * 5/1999 Huttunen et al. 379/446
6,192,253 B1 * 2/2001 Charlier et al. 455/340
6,377,825 B1 * 4/2002 Kennedy et al. 455/556

* cited by examiner

Primary Examiner—Thanh Cong Le
Assistant Examiner—Andrew Harry
(74) *Attorney, Agent, or Firm*—Fulbright & Jaworski L.L.P.

(57) **ABSTRACT**

A battery pack of a cellular phone is equipped with a battery and an electronic device such as an MP3 player. When the battery pack is detached from the cellular phone, the battery is a power supply for the MP3 player only. When the battery pack is attached to the cellular phone, the battery is the power supply for both the cellular phone and the MP3 player. A detector detects whether the attached device is a hands free device or an MP3 player, and if an MP3 player is attached to the cellular phone, a switch facilitates communication between the cellular phone and the MP3 player. If the cellular phone orders the MP3 player to play or execute other functions, instructions transmit to the MP3 player through a connector in a battery pack and the MP3 player operates. During MP3 player operation, information such as a name of a song, a singer and playing time transmits to a CPU through a connector and is displayed on a liquid crystal display of the cellular phone. A call message and call record are recorded in an MM card or flash memory in MP3 files, so a consumer hears call messages or call records, depending on the case.

2 Claims, 4 Drawing Sheets

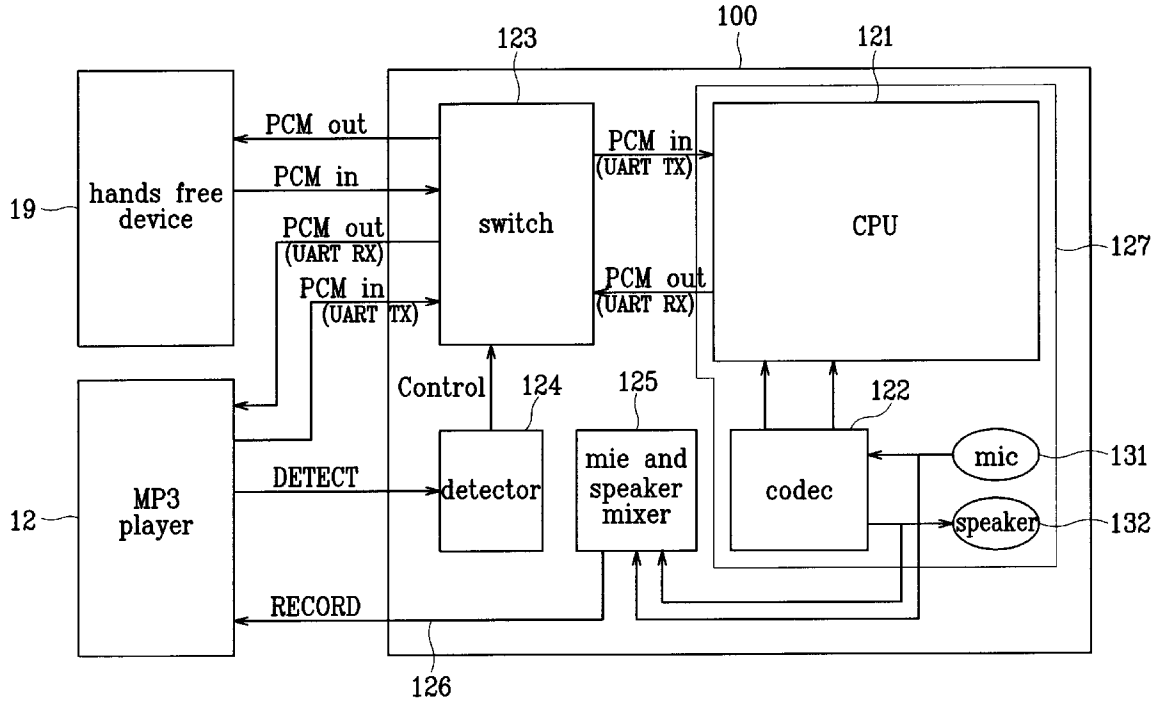

FIG.1

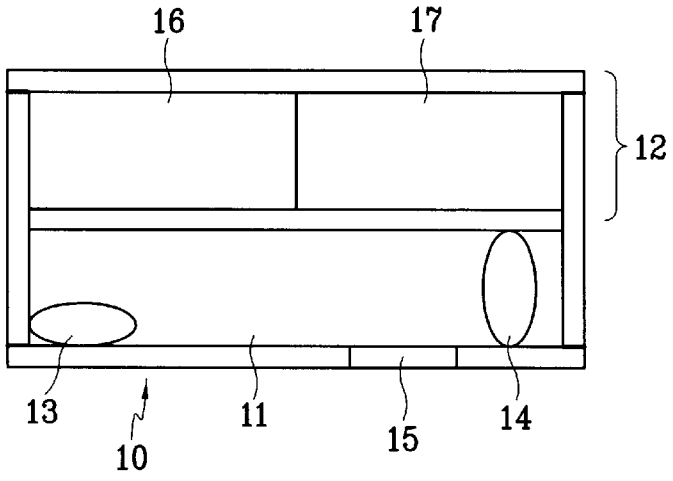

FIG.2

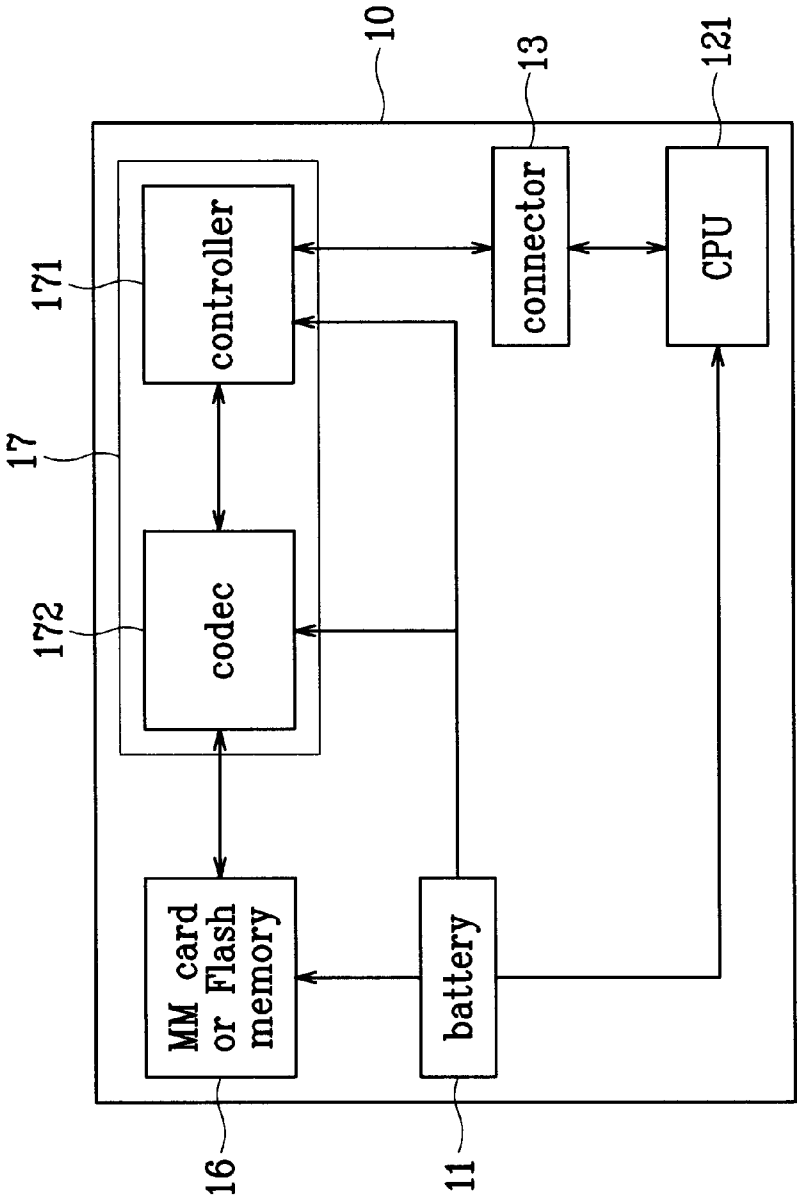
10
13
121
connector
CPU
171
controller
17
172
codec
MM card or Flash memory
battery
16
11

FIG.3

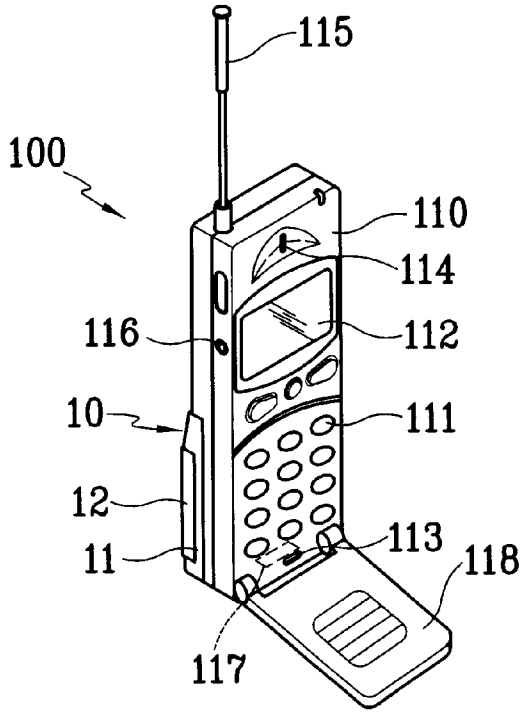

FIG. 4

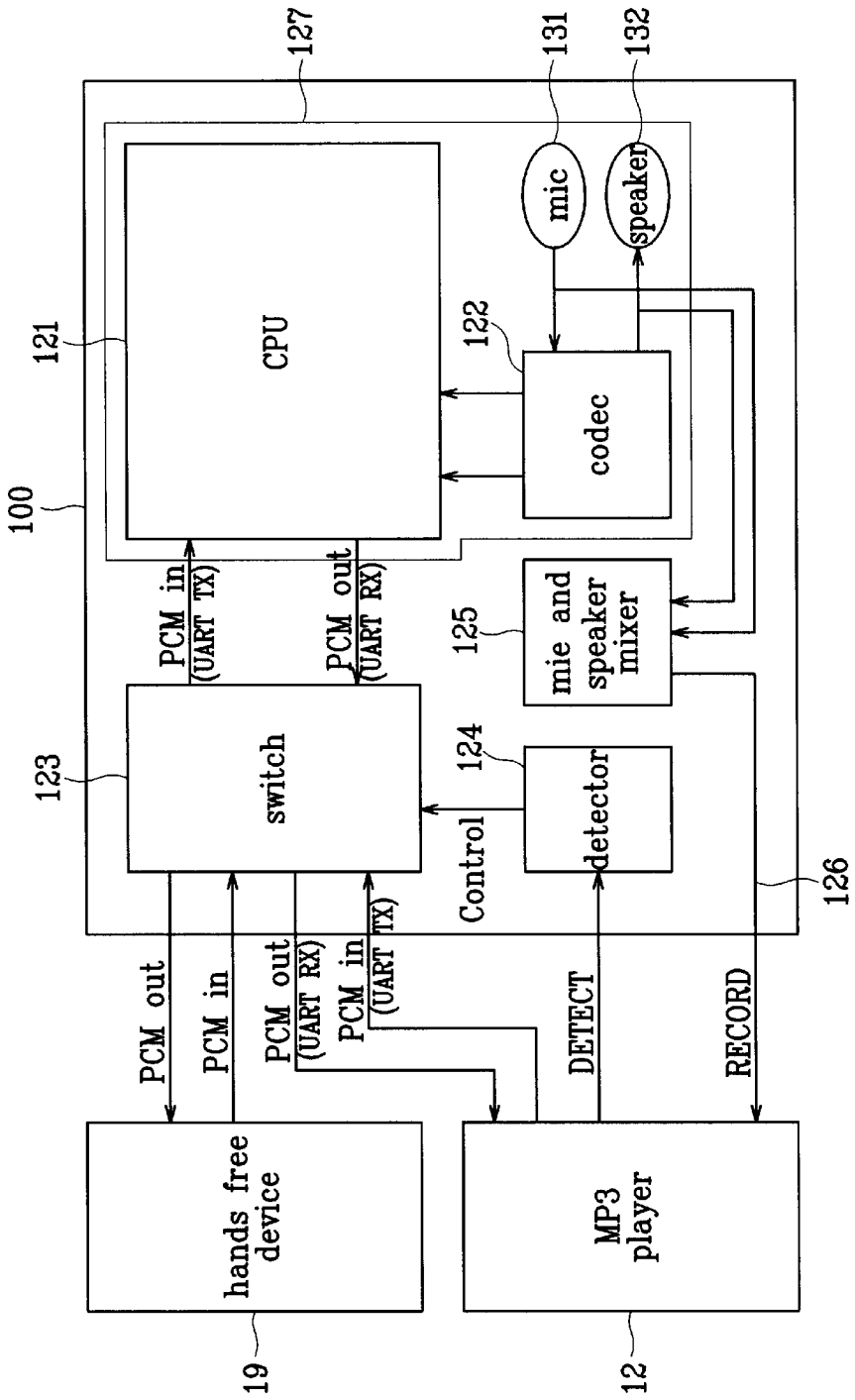
100
121
CPU
127
122
codec
131
mic
132
speaker
123
switch
PCM in
(UART TX)
PCM out
(UART RX)
125
mie and speaker mixer
124
detector
Control
126
PCM out
PCM in
PCM out
(UART RX)
PCM in
(UART TX)
DETECT
RECORD
hands free device
19
MP3 player
12

CELLULAR PHONE CAPABLE OF ACCOMMODATING ELECTRONIC DEVICE

BACKGROUND OF THE INVENTION

(a) Field of the Invention

The present invention relates to a cellular phone capable of accommodating an electronic device.

(b) Description of the Related Art

In recent years, personal mobile communication devices including cellular phones or PCS (personal communication system) phones have increased in use for communication, replacing wired telephones.

In these personal mobile communication devices, a battery pack composed of numerous battery cells is provided for a power supply. This battery pack is capable of repetitive recharging using a power supply of a car through hands free devices or by using an exclusive charger. A cellular phone is provided with a stable power supply by charging the battery pack.

Consumers appreciate cellular phones with various functions, such as a built-in MP3 player for playing music with a good sound quality, similar to that of compact discs.

However, when consumers want to only use an MP3 player, they must also take a cellular phone because they can't detach the MP3 player from the cellular phone. Also, consumers who only have an MP3 player can't attach it to a cellular phone, so they must buy a cellular phone with an MP3 player. A CPU (central processing unit) of a cellular phone needs to be installed with communication ports for communication between a cellular phone and an MP3 player.

SUMMARY OF THE INVENTION

It is therefore an object of the present invention to provide a cellular phone capable of accommodating an electronic device.

These and other objects are provided, according to the present invention, by a cellular phone with a battery pack capable of accommodating an electronic device.

In detail, a battery capable of accommodating an electronic device is attached to a cellular phone. A call processing part which controls sound transmitted by wireless communications, a detector which detects whether electronic devices are attached or detached, and a switch which controls transmission and reception of signals between a call processing part and an electronic device, are attached to the cellular phone.

A connector, which controls transmission and reception of signals between a cellular phone and an electronic device, and a battery, which provides the cellular phone and electronic device with a power supply, are attached to a battery pack.

An electronic device is one of an MP3 player, a personal information communication device, a bluetooth, and a memory card.

An MP3 player is composed of a memory part which records many MP3 files, a codec (coder-decoder) which converts signals of MP3 files in a memory part, and a controller which controls transmission of signals to a cellular phone through a connector.

A mike and speaker mixer which transmits sound from a call processing part to an MP3 player is attached to the cellular phone, and a transmitted sound from the mike and speaker mixer is recorded in a memory part.

An electronic device such as an MP3 player is attached to or detached from a cellular phone conveniently, information of an electronic device is displayed in a liquid crystal display of the cellular phone, and a consumer hears call messages or call records in MP3 files saved in an MM card or a flash memory, depending on the case.

BRIEF DESCRIPTION OF THE DRAWINGS

FIG. **1** is a cross-sectional view of a battery pack of a cellular phone according to an embodiment of the present invention.

FIG. **2** is a block diagram of a battery pack of a cellular phone according to an embodiment of the present invention.

FIG. **3** is a perspective drawing of a cellular phone according to an embodiment of the present invention.

FIG. **4** is a block diagram of a cellular phone according to an embodiment of the present invention.

DETAILED DESCRIPTION OF THE PREFERRED EMBODIMENTS

The present invention now will be described more fully hereinafter with reference to the accompanying drawings, in which preferred embodiments of the invention are shown. This invention may, however, be embodied in many different forms and should not be construed as limited to the embodiments set forth herein, but rather, these embodiments are provided so that this disclosure will be thorough and complete, and will fully convey the scope of the invention to those skilled in the art.

FIG. **1** is a cross-sectional view of a battery pack of a cellular phone according to an embodiment of the present invention; FIG. **2** is a block diagram of a battery pack of a cellular phone according to an embodiment of the present invention; FIG. **3** is a perspective drawing of a cellular phone according to an embodiment of the present invention; and FIG. **4** is a block diagram of a cellular phone according to an embodiment of the present invention.

According to FIG. **1**, a battery pack **10** is divided into two spaces, of which one has a battery **11** and the other an electronic device such as an MP3 player **12**. An MP3 player **12** is either attached to or detached from a battery pack. The battery pack **10** is equipped with a connector **13**, an audio jack **14**, and a function switch **15**. When an MP3 player **12** is attached to a cellular phone (not shown), the battery **11** is a power supply of both the cellular phone and the MP3 player **12**. When an MP3 player **12** is detached from a cellular phone, the battery **11** is the power supply of only the MP3 player **12**. The connector **13** connects the MP3 player **12** to the cellular phone for data communication between them. After a consumer plugs an earphone or a headphone into the audio jack **14**, he or she hears music on the MP3 player **12**. When the MP3 player **12** is detached from the cellular phone, the MP3 player **12** is operated by the function switch **15**.

The MP3 player **12** is equipped with a driving part **17** including an MM card or flash memory **16**, a controller **171**, and a codec **172**, as shown in FIG. **2**. Many MP3 music files are recorded in the MM card or flash memory **16**, and the codec **172** is composed of an encoder which converts analogue signals into digital signals and a decoder which converts digital signals into analogue signals.

The MP3 player **12**, when attached to battery pack **10**, is operated according to the next process.

If a consumer presses down the function switch **15**, the controller **171** decodes instructions and calls up MP3 music

files recorded in the MM card or flash memory **16**. The decoder in codec **172** converts digital signals into analogue signals, and the consumer hears music through an earphone or a headphone plugged into the audio jack **14**.

In a battery pack **10** including an MP3 player **12** detached from a cellular phone, the MP3 player **12** is portable and powered by a power supply from the battery **11**. When power of the battery **11** is consumed, the battery pack **10** is recharged by a cellular phone charger.

On the other hand, when a battery pack **10** including an MP3 player is attached to a cellular phone, the cellular phone controls functions of the MP3 player. This case will be more fully described hereinafter with reference to the accompanying drawings **2**, **3**, and **4**.

According to FIG. **3**, a cellular phone **100** is composed of a cellular phone case **110** and a battery **10**. A dial pad **111** which inputs telephone numbers or other information is placed at one side of the cellular phone **100**, and the dial pad **111** can be shielded by a cover **118**. A liquid crystal display **112** which displays information is placed above the dial pad **111**. A mike **113** and a speaker **114** for telephone communications, an antenna **115** which receives signals from a base station, an audio jack **116** into which an earphone plug is inserted, and a hands free connector which is connected to hands free devices are also attached to the cellular phone.

As shown in FIG. **4**, a CPU (central processing unit) **121**, a codec **122**, a switch **123** as a digital multiplexer, a detector **124**, and a mike and speaker mixer **125** are provided inside of the cellular phone.

A battery **11** is the power supply for both the cellular phone **100** and the MP3 player **12**. They communicate data through the connector **13**, and the cellular phone **100** controls operation of the MP3 player **12**.

Operation of the cellular phone **100** including the CPU **121**, codec **122**, and a call processing part **127** with a mike **131** and a speaker **132** will now be explained. Sound transmitted from the consumer converts to electrical signals through the mike **131**, transmits to another consumer through a transmitter (not shown), and outputs to a speaker through a receiver (not shown).

Now, it will be explained about a cellular phone **100** attached to a battery pack **10**. A detector **124** detects whether an attached device is a hands free device **19** or an MP3 player **12**, and if an MP3 player **12** is attached to the cellular phone **100**, a switch **123** helps to facilitate communication between the cellular phone **100** and the MP3 player **12**. PCM in (pulse code modulation in) and PCM out (pulse code modulation out) digital transmission lines between the cellular phone **100** and the hands free device **19** are transformed into serial data transmission lines through a UART (universal asynchronous receiver transmitter) between the cellular phone **100** and MP3 player **12**. Therefore, digital signals transmit between the cellular phone and the MP3 player.

If the cellular phone **100** orders the MP3 player **12** to play or execute other functions, instructions transmit from the MP3 player **12** through the connector **13** in the battery pack **10**, and the controller **171** of the MP3 player **12** calls MP3 music files recorded in the MM card or flash memory **16** according to the instructions. By converting a digital signal to an analogue signal through the decoder of the codec **172**, the consumer hears music with an earphone. During MP3 player **12** operation, information such as the name of a song, a singer, and playing time transmits to the CPU **121** in the cellular phone **100** through the connector **13** and is displayed on the liquid crystal display **112** of the cellular phone **100**.

A call message and a call record transmit to the sound transmission line **126** through the mike and speaker mixer **125**, transmitted analogue signals travel to an MP3 player **12** through a connector **13** where they are converted to digital signals by the codec **172**, and they are then recorded in the MM card or flash memory **16** in MP3 files (ADPCM: adaptive differential PCM). The consumer hears call messages or call records by this process.

Instead of an MP3 player, a PDA (personal digital assistant), a bluetooth or a memory card used in a digital camera can be used as the electronic device.

An electronic device such as an MP3 player is attached or detached to the cellular phone conveniently, information of an attached electronic device is displayed in a liquid crystal display of the cellular phone, and the consumer hears call messages or call records in MP3 files saved in an MM card or flash memory, depending on the case.

What is claimed is:

1. A cellular phone capable of accommodating an MP3 player comprising:

a battery pack attaching to the MP3 player;

a call processing part which controls sound transmitted by wireless communication;

a detector which detects the attached MP3 player; and

a switch which controls transmission and reception of signals between the call processing part and the MP3 player;

wherein the MP3 player is composed of a memory part which records many MP3 files, a codec which converts signals of MP3 files in the memory part, and a controller which controls transmission of signals to the cellular phone through a connector.

2. A cellular phone capable of accommodating an MP3 player comprising:

a battery pack attaching to the MP3 player;

a call processing part which controls sound transmitted by wireless communication;

a detector which detects the attached MP3 player; and

a switch which controls transmission and reception of signals between the call processing part and the MP3 player;

wherein the MP3 player is composed of a memory part which records many MP3 files, a codec which converts signals of MP3 files in the memory part, and a controller which controls transmission of signals to the cellular phone through a connector, and wherein a mike and speaker mixer which transmits sound from the call processing part to the MP3 player is attached to the cellular phone, and transmitted sound from the mike and speaker mixer is recorded in the memory part.

* * * * *

UNITED STATES PATENT AND TRADEMARK OFFICE

CERTIFICATE OF CORRECTION

PATENT NO. : 6,526,287 B1
DATED : February 25, 2003
INVENTOR(S) : Eun-Bok Lee

It is certified that error appears in the above-identified patent and that said Letters Patent is hereby corrected as shown below:

Title page,
The Assignee was omitted from the said Letters Patent. Please correct it to include:

-- [73] Assignee: **GTRAN Korea Inc.**
Anyang-city, Kyungki-do, KOREA --

Signed and Sealed this

Twenty-sixth Day of August, 2003

JAMES E. ROGAN
Director of the United States Patent and Trademark Office