UNITED STATES PATENT AND TRADEMARK OFFICE

---

BEFORE THE PATENT TRIAL AND APPEAL BOARD

---

APPLE INC.,
Petitioner

v.

S.M.R INNOVATIONS LTD and Y.M.R TECH LTD
Patent Owners

---

*Inter Partes* Review Case Nos. IPR2024-01050, IPR2024-01049
U.S. Patent Nos. 7,969,990, 8,711,866

**DECLARATION OF DR. SAYFE KIAEI**
**IN SUPPORT OF PETITION FOR *INTER PARTES* REVIEW OF**
**U.S. PATENT NOS. 7,969,990 AND 8,711,866**

## TABLE OF CONTENTS

*I. INTRODUCTION AND QUALIFICATIONS ..... 14*

**A. Educational Background and Professional Experience ..... 14**

*II. METHODOLOGY; MATERIALS CONSIDERED ..... 19*

*III. OVERVIEW AND LEGAL STANDARDS ..... 21*

**A. Person of Ordinary Skill in the Art ..... 22**

**B. Obviousness ..... 23**

**C. Analogous Art ..... 28**

**D. Claim Construction ..... 29**

*IV. LEVEL OF A PERSON OF ORDINARY SKILL ..... 29*

*V. OVERVIEW OF THE TECHNOLOGY ..... 30*

**A. Wireless Networking ..... 30**

**B. Cellular Networks ..... 35**

**C. Device Discovery and Service Discovery ..... 35**

**D. Media Streaming ..... 39**

**E. Streaming Protocols ..... 42**

**F. Graphical User Interfaces (GUIs) and Touch Screens ..... 44**

**G. Mobile Device Hardware ..... 46**

**H. Auxiliary Rendering Devices (aka Helper Servers/Helper Devices) ..... 48**

**I. Codecs ..... 51**

**J. Bidirectional Communication Link ..... 52**

**K. Media Type Requirements ..... 53**

**L. Media Transformation ..... 53**

**M. Media Cloner ..... 54**

*VI. OVERVIEW OF THE '990 AND '866 PATENTS ..... 55*

**A. The '990 and '866 Patents' Alleged Invention ..... 55**

**B. The '990 Patent's Prosecution ..... 57**

**C. The '866 Patent's Prosecution ..... 58**

***VII. PROPOSED GROUNDS OF UNPATENTABILITY..... 58***

***VIII. OVERVIEW OF THE PRIOR ART..... 59***

**A. Overview of Chihara..... 59**

**B. Overview of BluetoothSpec ..... 60**

**C. Overview of Everett ..... 63**

**D. Overview of Chang ..... 64**

***IX. OPINIONS REGARDING GROUND 1 ('990 PATENT): CLAIMS 1-3, 9, AND 24 ARE OBVIOUS OVER CHIHARA, BLUETOOTHSPEC, EVERETT, AND CHANG ..... 65***

**A. Claim 1(Pre) - Apparatus for rerouting communication data, comprising:..... 65**

**B. Claim 1(a) - a mobile communication device comprising: ..... 70**

**C. Claim 1(a)(i): an announcer device associated with said mobile communication device, and configured for indicating to surrounding equipment that said mobile communication device is available to receive rerouting, thereby to enable receipt of rerouted data from said surrounding equipment, and ..... 72**

1. Announcing Availability to Receive Rerouted Data From Surrounding Equipment..... 72
2. Chihara Teaches an Announcer Device and Rerouting Data..... 75
3. BluetoothSpec Teaches Announcing Availability – Inquiry Substate ..... 81
4. Motivation to Combine Chihara and BluetoothSpec..... 84

**D. Claim 1(a)(ii): a scout device associated with said mobile communication device, configured for scanning surroundings of said associated mobile communication device to identify and determine availability of compatible equipment in the vicinity, thereby to reroute data from said mobile communication device to a selected one of said surrounding equipment, wherein said rerouting comprises**

**setting up a bidirectional communication link between said mobile communication device and said selected surrounding equipment, said bidirectional link having a first link direction from said mobile communication device to said selected surrounding equipment and a second link direction from said selected surrounding equipment to said mobile communication device, said bidirectional link carrying streaming data over both directions of said first link direction and said second link direction, and wherein said scout device is operable to determine media type requirements of said compatible equipment; ..... 89**

1. Chihara Teaches a Scout Device and Bidirectional Communication Link ..... 89
2. BluetoothSpec Teaches Scanning Surroundings to Identify and Determine Availability of Compatible Equipment ..... 92
3. Chihara Teaches Bidirectional Communication Link ..... 100
4. Chihara Teaches Media Type Requirements ..... 104
5. Motivation to Combine Chihara and BluetoothSpec ..... 105

**E. Claim 1(a)(iii): a media transformer, associated with said scout device, for transforming media into a form that accords with said determined media type requirements, wherein a plurality of types correspond to said media type requirements, and further comprising a user interface for allowing a user to select one of said media type requirements for transforming at said media transformer and ..... 107**

1. Chihara-Everett's Media Transformer ..... 107
2. Motivation to Combine Chihara with Everett ..... 112
3. Chihara's Plurality of Media Type Requirements ..... 116
4. Chihara's User Interface for Selecting a Media Type Requirement ..... 118
5. Chang's User Interface for Selecting a Media Type Requirement ..... 123
6. Motivation to Combine Chihara, BluetoothSpec, Everett, and Chang ..... 127

**F. Claim 1(a)(iv): a media cloner, associated with said media transformer, for making multiple copies of a single incoming data stream, thereby to enable said apparatus to redirect said single incoming data stream to a plurality of locations, at least some of said multiple copies being redirected via said media transformer..... 132**

1. '990 Patent's Media Cloner Description ..... 132
2. Chihara-Everett Teaches a Media Cloner..... 132
3. Motivation to Combine Chihara and Everett..... 136

**G. Claim 2: Apparatus according to claim 1, further comprising a user interface associated with said scout device for allowing a user to select between available compatible equipment to reroute data thereto..... 137**

**H. Claim 3: Apparatus according to claim 1, wherein said announcer is an active device, operable to transmit at least status information to respective surroundings..... 139**

**I. Claim 9: Apparatus according to claim 1, further comprising control functionality operable to carry out said rerouting through locally available network infrastructure..... 140**

**J. Claim 24 - A cellular telephone comprising the apparatus of claim 1. ..... 140**

***X. OPINIONS REGARDING GROUND 1 ('866 PATENT): CLAIMS 22-24 ARE OBVIOUS OVER CHIHARA, BLUETOOTHSPEC, EVERETT, AND CHANG..... 144***

**A. Claim 22(Pre) - Apparatus for routing and rerouting streaming data, the apparatus being mobile and comprising: ..... 144**

1. Chihara Teaches a Mobile Apparatus for Routing and Rerouting Streaming Data ..... 144

**B. Claim 22(a) - a streaming device comprising: ..... 148**

**C. Claim 22(a)(i) - an announcer device configured to indicate to surrounding media handling devices that said streaming device is available to receive streaming data, thereby to enable receipt of rerouted data from said surrounding media handling devices, and ..... 148**

**D. Claim 22(a)(ii) - a scout device configured to scan surroundings of said streaming device to identify surrounding media handling devices as being compatible to handle given media, and determine availability of said identified compatible media handling devices, thereby to reroute streaming data between said streaming device and a selected one of said surrounding media handling devices, said scout device further being configured to determine media type requirements of said compatible media handling devices, said apparatus configured to set up a bidirectional wireless communication link between said streaming device and a respective one of said media handling devices, said bidirectional link carrying streaming data over either direction as required of said bidirectional link;..... 149**

**E. Claim 22(a)(iii) - a media transformer, configured to transform media into forms that accord with respective determined media type requirements, wherein there are a plurality of said types; ..... 149**

**F. Claim 22(a)(iv) - a user interface for allowing a user to select one of said media type requirements for transforming at said media transformer, and..... 149**

**G. Claim 22(b) - a media cloner, associated with said media transformer, for making multiple copies of a single incoming data stream, thereby to enable said apparatus to redirect said single incoming data stream to a plurality of locations, at least some of said multiple copies being transformed via said media transformer..... 149**

**H. Claim 23(Pre) - Apparatus for routing'and rerouting media data, the apparatus being mobile and comprising:..... 150**

**I. Claim 23(a) - a media data transfer device comprising: ..... 150**

**J. Claim 23(a)(i) - an announcer device configured for indicating to surrounding media handling devices that said media data transfer device is available to receive media data, thereby to enable receipt of rerouted data from said surrounding media handling evices, and ..... 150**

**K. Claim 23(a)(ii) - a scout device configured for scanning surroundings to identify surrounding media handling**

**devices as being compatible with given media and determine availability of said identified compatible media handling devices, thereby to reroute edia data from said media data transfer device to a selected one of said surrounding media handling devices, said scout device further being configured to determine media type requirements of said media handling devices; ..... 150**

**L. Claim 23(a)(iii) - a media transformer, configured to transform media into a form that accords with respective determined media type requirements, there being a plurality of said media type requirements; ..... 150**

**M. Claim 23(a)(iv) - a user interface for allowing a user to select one of said plurality of media type requirements for transforming at said media transformer, and..... 151**

**N. Claim 23(a)(v) - a media cloner, associated with said media transformer, for making multiple copies of said media data, thereby to enable said apparatus to redirect said media data to a plurality of locations, at least some of said multiple copies being ransformed at said media transformer. ..... 151**

**O. Claim 24 - The apparatus of claim 23, wherein said media type requirements comprise a screen capability. ..... 151**

***XI. CONCLUSION..... 154***

## CLAIM LISTING '990 PATENT

**Claim 1:**

**Claim 1[Pre]:** Apparatus for rerouting communication data, comprising:

**Claim 1(a):** a mobile communication device comprising:

**Claim 1(a)(i):** an announcer device associated with said mobile communication device, and configured for indicating to surrounding equipment that said mobile communication device is available to receive rerouting, thereby to enable receipt of routed data from said surrounding equipment, and

**Claim 1(a)(ii):** a scout device associated with said mobile communication device, configured for scanning surroundings of said associated mobile communication device to identify and determine availability of compatible equipment in the vicinity, thereby to reroute data from said mobile communication device to a selected one of said surrounding equipment, wherein said rerouting comprises setting up a bidirectional communication link between said mobile communication device and said selected surrounding equipment, said bidirectional link having a first link direction from said mobile communication device to said selected surrounding equipment and a second link direction from said selected surrounding equipment to said mobile communication device, said bidirectional link carrying streaming data over both directions of said first link direction and said

second link direction, and wherein said scout device is operable to determine media type requirements of said compatible equipment;

**Claim 1(a)(iii):** a media transformer, associated with said scout device, for transforming media into a form that accords with said determined media type requirements, wherein a plurality of types correspond to said media type requirements, and further comprising a user interface for allowing a user to select one of said media type requirements for transforming at said media transformer and

**Claim 1(a)(iv):** a media cloner, associated with said media transformer, for making multiple copies of a single incoming data stream, thereby to enable said apparatus to redirect said single incoming data stream to a plurality of locations, at least some of said multiple copies being redirected via said media transformer.

**Claim 2:**

Apparatus according to claim 1, further comprising a user interface associated with said scout device for allowing a user to select between available compatible equipment to reroute data thereto.

**Claim 3:**

Apparatus according to claim 1, wherein said announcer is an active device, operable to transmit at least status information to respective surroundings.

**Claim 9:**

Apparatus according to claim 1, further comprising control functionality operable to carry out said rerouting through locally available network infrastructure.

**Claim 24:**

A cellular telephone comprising the apparatus of claim 1.

## CLAIM LISTING '866 PATENT

**Claim 22:**

**Claim 22[Pre]:** Apparatus for routing and rerouting streaming data, the apparatus being mobile and comprising:

**Claim 22(a):** a streaming device comprising:

**Claim 22(a)(i):** an announcer device configured to indicate to surrounding media handling devices that said streaming device is available to receive streaming data, thereby to enable receipt of rerouted data from said surrounding media handling devices, and

**Claim 22(a)(ii):** a scout device configured to scan surroundings of said streaming device to identify surrounding media handling devices as being compatible to handle given media, and determine availability of said identified compatible media handling devices, thereby to reroute streaming data between said streaming device and a selected one of said surrounding media handling devices, said scout device further being configured to determine media type requirements of said compatible media handling devices, said apparatus configured to set up a bidirectional wireless communication link between said streaming device and a respective one of said media handling devices, said bidirectional link carrying streaming data over either direction as required of said bidirectional link;

**Claim 22(a)(iii):** a media transformer, configured to transform media into forms that accord with respective determined media type requirements, wherein there are a plurality of said types;

**Claim 22(a)(iv):** a user interface for allowing a user to select one of said media type requirements for transforming at said media transformer, and

**Claim 22(b):** a media cloner, associated with said media transformer, for making multiple copies of a single incoming data stream, thereby to enable said apparatus to redirect said single incoming data stream to a plurality of locations, at least some of said multiple copies being transformed via said media transformer.

**Claim 23:**

**Claim 23[Pre]:** Apparatus for routing'and rerouting media data, the apparatus being mobile and comprising:

**Claim 23(a):** a media data transfer device comprising:

**Claim 23(a)(i):** an announcer device configured for indicating to surrounding media handling devices that said media data transfer device is available to receive media data, thereby to enable receipt of rerouted data from said surrounding media handling devices, and

**Claim 23(a)(ii):** a scout device configured for scanning surroundings to identify surrounding media handling devices as being compatible with given media and determine availability of said identified compatible media handling devices,

thereby to reroute media data from said media data transfer device to a selected one of said surrounding media handling devices, said scout device further being configured to determine media type requirements of said media handling devices;

**Claim 23(a)(iii):** a media transformer, configured to transform media into a form that accords with respective determined media type requirements, there being a plurality of said media type requirements;

**Claim 23(a)(iv):** a user interface for allowing a user to select one of said plurality of media type requirements for transforming at said media transformer, and

**Claim 23(a)(v):** a media cloner, associated with said media transformer, for making multiple copies of said media data, thereby to enable said apparatus to redirect said media data to a plurality of locations, at least some of said multiple copies being transformed at said media transformer.

**Claim 24:**

The apparatus of claim 23, wherein said media type requirements comprise a screen capability.

I, Sayfe Kiaei, declare as follows:

## I. INTRODUCTION AND QUALIFICATIONS

1. I am over the age of 21 and am competent to make this declaration. I make this declaration based on facts and matters within my own knowledge and on information provided to me by others, and, if called as a witness, I could and would competently testify to the matters set forth herein.

### A. Educational Background and Professional Experience

2. My qualifications are stated more fully in my curriculum vitae, which is attached as Exhibit A. Below is a summary of my education, work experience, and other qualifications.

3. I earned a Ph.D. in 1987 from Washington State University in Electrical, Computer, and Energy Engineering. From 1985 through 1987, while working toward my Ph.D., I worked with Boeing on the development of signal processing and control systems.

4. From 1987 through 1993, I was a tenured Professor at Oregon State University in the Electrical and Computer Engineering Department.

5. From 1993 to 2002, I was a Senior Member of Technical Staff with the Wireless Technology Center and Broadband Operations at Motorola Inc. With the Wireless Integrated Technology Center (WITC) group of Motorola, I was responsible for the development of wireless system for cellular system, 2-way

Radios, RF integrated circuits, GPS, and Bluetooth. I represented Motorola at the Bluetooth (BT) SIG group forming the first BT standard. I was also responsible for the development of BT and GPS IC solutions for Motorola's Cellular phones. With the Broadband Operation, I worked with the team on the development of Single-Chip COPPERGOLD ™ Motorola Digital Subscriber Lines (DSL) transceivers. I worked on the development of broadband transceivers for MODEMS including DSL, SDSL, VDSL, and Optical communication systems. I also represented Motorola in the T`1E1 and ETSI, and cable MODEM DOCIS standards.

6. Since 2001 I have held the position of Motorola Endowed Chair Professor in Analog and Radio Frequency Integrated Circuitry at the School of Electrical, Computer, and Energy Engineering at Arizona State University in Tempe, Arizona. I am also the Director of the National Science Foundation Center, Connection One. Connection One is an industry/university cooperative research center with focus on communication systems. The center has over thirty industrial members and five university members focused on developing communication systems, sensors, electronics, bio-electronics, and networking technologies.

7. At Arizona State University, I have developed and taught courses on Communications, Broadband Wirelines and Wireless Transceivers, Electronics, VLSI, Analog IC design, RFIC, communications, and related areas. In my over thirty years of academic experience, I have taught university courses and done research in

electronics, RF and wireless system, bio-electronics, networking, communication systems, and sensors. I have graduated over 100 M.S. and Ph.D. students working under my supervision on their thesis, and many of them are professors in academia, or have senior positions in the industry. Currently, I have 8 M.S., Ph.D., and postdoc students working with me in my lab on research related to communication and networking systems, wireless systems, RF, and integrated circuits. My research is funded by various sources, including industry, federal agencies including NSF, DARPA, ONR, DOE, and other, with an average total research funding of $1M per year.

8. I have been conducting research, publishing papers, and supervising graduate students working on communication system, signal process, audio processing, GPS, BT, DSL, RFIC, and communication transceivers for the past 40 years. I have published over two hundred journal and conference papers covering topics such as wireless systems, power management, low-power electronics, sensors, radio frequency, integrated circuits (IC), filter design, and related areas. A list of my publications can be found in my CV, attached as Exhibit A. I also have over 10 patents and patent applications in electronics, RF, and low-power bio-electronics.

9. I am an IEEE Fellow, a distinction and the highest level of IEEE membership awarded by the IEEE directors to recognize a high level of demonstrated extraordinary accomplishments. The IEEE is the Institute of Electrical

and Electronics Engineers, the world's largest association of technical professionals whose objectives include the educational and technical advancement of electrical and electronic engineering, telecommunications, computer engineering, and related disciplines. I am a member of the IEEE Circuits and Systems Society, IEEE Solid State Circuits Society, and IEEE Communication Society, IEEE RF and Microwave committees, IEEE International Symposium on Low Power Electronics and Design (ISLPED), IEEE Signal Processing Society, IEEE Fellow Selection Committee, and many other International Electrical Engineering societies. I was one of the key organizers to establish the IEEE Radio Frequency Integrated Circuits (RFIC) symposium in 1995, and IEEE International Symposium on Low Power Electronics and Design (ISLPED) in 1997. I have been on the executive committee, and technical committee of RFIC and ISLPED for the last 16 years. The RFIC and ISLPED Symposia have grown and is now the premier international symposium in the world where the latest RF, low-power electronics, wireless, and bio-electronic circuits and components are presented.

10. I have received several awards including the Carter Best Teacher Award, the IEEE Darlington Award (which is given for the best technical paper on circuits and systems in the IEEE Circuits and Systems Society), and the Motorola 10X Rapid Design Cycle Reduction Award.

11. I have been one of the key organizers of the IEEE International Symposium on Low Power Electronics and Design (ISLPED) since 1997. I have published papers and organized sessions on techniques for low-power cellular phones at ISLPED. I have published a number of papers on the design and development of low-power RF, wireless transceivers, sensors, and low-power bioelectronics.

12. I have also been a consultant on various projects with Motorola, Intel (designing 2G, 3G mobile telephone transceivers, Internet-of-Things (IOT), and sensors), Texas Instrument (developing 3G cellular and Bluetooth technologies), Sony Wireless (developing GPS technologies), Tektronics (designing wireless systems), and various other consultancies. During my work in industry, I have designed and contributed to the design of many wireless systems for commercial products. Many of my designs are still in use today in products manufactured by the companies I have worked for, including Motorola, Intel, Sony, and more.

13. My compensation is not dependent on the outcome of these proceedings or the content of my opinions. To the best of my knowledge, I have no financial interest in either party or in the outcome of this proceeding.

## II. METHODOLOGY; MATERIALS CONSIDERED

14. I have relied upon my education, knowledge, and experience with the technology of communication networks, as well as the other materials as discussed in this declaration in forming my opinions.

15. For this work, I have been asked to review U.S. Patent Nos. 7,969,990 and 8,711,866 ("the *'990 Patent*") (Ex. 1001) ("the *'866 Patent*") (Ex. 1038) including the specification and claims, and the '990 and '866 Patents' prosecution histories ("*'990 File History*") (Ex. 1002), ("*'866 File History*") (Ex. 1039). In developing my opinions relating to the '990 and '866 Patents, I have considered the materials cited or discussed herein, including those listed below.

- U.S. Patent No. 7,969,990 ("*'990 Patent*") (Ex. 1001)
- Prosecution History for the '990 Patent ("*'990 FH*") (Ex. 1002)
- U.S. Patent App. Pub. No. 2002/0068600 to Chihara et al. ("*Chihara*") (Ex. 1004)
- Specification of the Bluetooth System Version 1.1. February 22, 2001. ("*BluetoothSpec*") (Ex. 1005)
- U.S. Patent No. 6,701,162 to Everett ("*Everett*") (Ex. 1006)
- U.S. Patent App. Pub. No. 2002/0062406 to Chang et al. ("*Chang*") (Ex. 1007)
- U.S. Patent No. 7,580,005 to Palin ("*Palin*") (Ex. 1008)
- U.S. Patent No. 6,307,921 to Engelke et al. ("*Engelke*") (Ex. 1009)
- U.S. Patent App. Pub. No. 2002/0178279 to Janik et al. ("*Janik*") (Ex. 1010)
- International Publication No. WO 01/74024 to Hartmaier et al. ("*Hartmaier*") (Ex. 1011)
- European Patent Application No. EP1132847 to Han et al. ("*Han*") (Ex. 1012)
- U.S. Patent App. Pub. 2002/0102998 to Lin ("*Lin*") (Ex. 1013)
- U.S. Patent No. 7,580,005 to Palin ("*Palin*") (Ex. 1014)

- U.S. Patent App. Pub. No. 2003/0110234 to Egli et al. ("*Egli*") (Ex. 1015)
- U.S. Patent No. 6,910,068 to Zintel et al. ("*Zintel*") (Ex. 1016)
- U.S. Patent No. 6,901,273 to Lutnaes ("*Lutnaes*") (Ex. 1018)
- U.S. Patent App. Pub. No. 2002/0141548 to Boda ("*Boda*") (Ex. 1019)
- International Publication No. WO 02/19152 to Bergman et al. ("*Bergman*") (Ex. 1020)
- Matthew S. Gast. *802.11 Wireless Networks The Definitive Guide*. O'Reilly & Associates. April 2002. ("*Gast*") (Ex. 1021)
- U.S. Patent No. 6,925,108 to Miller et al. ("*Miller*") (Ex. 1022)
- Jim Geier. *Wireless LANs*. 2nd Edition. Sams Publishing. July 2001. ("*Geier*") (Ex. 1023)
- U.S. Patent No. 6,212,282 to Mershon ("*Mershon*") (Ex. 1024)
- U.S. Patent No. 6,526,287 to Lee ("*Lee*") (Ex. 1025)
- U.S. Patent App. Pub. No. 2002/0101367 to Geiger et al. ("*Geiger*") (Ex. 1026)
- U.S. Patent App. Pub. No. 2002/0186770 to Jawerth et al. ("*Jawerth*") (Ex. 1027)
- U.S. Patent App. Pub. No. 2003/0013438 to Darby ("*Darby*") (Ex. 1028)
- U.S. Patent App. Pub. No. 2003/0139966 to Sirota et al. ("*Sirota*") (Ex. 1029)
- U.S. Patent No. 5,781,192 to Kodimer ("*Kodimer*") (Ex. 1030)
- U.S. Patent No. 6,297,737 to Irvin ("*Irvin*") (Ex. 1031)
- U.S. Patent No. 6,309,305 to Kraft ("*Kraft*") (Ex. 1032)
- U.S. Patent No. 7,676,372 to Oba ("*Oba*") (Ex. 1033)
- U.S. Patent App. Pub. No. 2002/0035699 to Crosbie ("*Crosbie*") (Ex. 1034)
- U.S. Patent App. Pub. No. 2003/0065803 to Heuvelman ("*Heuvelman*") (Ex. 1035)
- U.S. Patent App. Pub. No. 2004/0198294 to Hagin-Metzer ("*Hagin-Metzer*") (Ex. 1036)
- International Publication No. WO 00/036867 to Lilja et al. ("*Lilja*") (Ex. 1037)
- U.S. Patent No. 8,711,866 ("*'866 Patent*") (Ex. 1038)
- Prosecution History for the '866 Patent ("*'866 FH*") (Ex. 1039)

- *S.M.R Innovations Ltd. v. Apple Inc.*, 6:23-cv-00479, D.I. 50 ("[Proposed] Agreed Scheduling Order") (W.D.Tex. Jun. 7, 2024) (Ex. 1040)
- Affidavit of Nathaniel E. Frank-White concerning *BluetoothSpec* (Ex. 1041)
- *S.M.R Innovations Ltd. v. Apple Inc.*, 6:23-cv-00479, D.I. 1, Ex. H ("07-01-2023 Complaint, Ex. H") (Ex. 1042)
- *S.M.R Innovations Ltd. v. Apple Inc.*, 6:23-cv-00479, D.I. 1, Ex. G ("07-01-2023 Complaint, Ex. G") (Ex. 1043)
- 02-06-2024 '990 Patent Infringement Allegations Update (Ex. 1044)
- 02-06-2024 '866 Patent Infringement Allegations Update (Ex.1045)
- 05-17-2024 Preliminary Infringement Contentions (Ex.1046)

16. I have considered these materials from the viewpoint of a POSITA as of the priority date of the '990 and '866 Patents. For the purposes of this declaration, I have been asked to assume that the priority date of the '990 Patent is July 25, 2002 and I have been asked to assume that the priority date of the '866 Patent is also July 25, 2002. I note that my opinions provided in this declaration are made from the perspective of a POSITA as of this priority date of the '990 and '866 Patents, unless expressly stated otherwise. To the extent that I use any verb tense in this declaration that is present tense (e.g., "a POSITA would understand" instead of "a POSITA would have understood"), such verb tense should be understood to be my opinion as of the '990 and '866 Patents' priority date (again, unless expressly stated otherwise). I merely use the present verb tense for ease of reading.

## III. OVERVIEW AND LEGAL STANDARDS

17. In formulating my opinions, I have been instructed to apply certain legal standards. I am not a lawyer. I do not expect to offer any testimony regarding

what the law is. Instead, the following sections summarize the law as I have been instructed to apply it in formulating and rendering my opinions found later in this declaration. I understand that, in an *inter partes* review ("IPR") proceeding, patent claims may be deemed unpatentable if it is shown that they were anticipated or rendered obvious in view of the prior art. I understand that prior art in an IPR review is limited to patents or printed publications that predate the priority date of the patent at issue. I understand that questions of claim clarity (definiteness) and enablement cannot be considered as a ground for considering the patentability of a claim in these proceedings.

**A. Person of Ordinary Skill in the Art**

18. I understand that the '990 Patent and '866 Patent, the record of proceedings at the Patent Office (which I understand is called the "File History" or "Prosecution History"), and the teachings of the prior art are evaluated from the perspective of a person of ordinary skill in the art ("POSITA"). I understand that the factors considered in determining the ordinary level of skill in the art include: (i) the levels of education and experience of persons working in the field; (ii) the types of problems encountered in the field; and (iii) the sophistication of the technology. I may also consider, if available, the education level of the inventor, prior art solutions to the problems encountered in the art, and the rapidity with which innovations are made in the relevant art.

19. I understand that a person of ordinary skill in the art is not a specific real individual, but rather a hypothetical individual having the qualities reflected by the factors above. This hypothetical person has knowledge of all prior art in the relevant field as if it were arranged on a workshop wall and takes from each reference what it would teach to a person having the skills of a POSITA.

**B. Obviousness**

20. I understand that a claim may be invalid under 35 U.S.C. § 103(a) if the subject matter described by the claim as a whole would have been "obvious" to a hypothetical POSITA in view of a single prior art reference or in view of a combination of references at the time the claimed invention was made. Therefore, I understand that obviousness is determined from the perspective of a hypothetical POSITA. I further understand that a hypothetical POSITA is assumed to know and to have all relevant prior art in the field of endeavor covered by the patent in suit and all analogous prior art. I understand that obviousness in an IPR review proceeding is evaluated using a preponderance of the evidence standard, which means that the claims must be more likely obvious than nonobvious.

21. I also understand that an analysis of whether a claimed invention would have been obvious should be considered in light of the scope and content of the prior art, the differences (if any) between the prior art and the claimed invention, and the level of ordinary skill in the pertinent art involved. I understand as well that a prior

art reference should be viewed as a whole. I understand that in considering whether an invention for a claimed combination would have been obvious, I may assess whether there are apparent reasons to combine known elements in the prior art in the manner claimed in view of interrelated teachings of multiple prior art references, the effects of demands known to the design community or present in the marketplace, and/or the background knowledge possessed by a POSITA. I also understand that other principles may be relied on in evaluating whether a claimed invention would have been obvious, and that these principles include the following:

- A combination of familiar elements according to known methods is likely to be obvious when it does no more than yield predictable results;
- When a device or technology is available in one field of endeavor, design incentives and other market forces can prompt variations of it, either in the same field or in a different one, so that if a POSITA can implement a predictable variation, the variation is likely obvious;
- If a technique has been used to improve one device, and a POSITA would have recognized that it would improve similar devices in the same way, using the technique is obvious unless its actual application is beyond his or her skill;
- An explicit or implicit teaching, suggestion, or motivation to combine two prior art references to form the claimed combination may

demonstrate obviousness, but proof of obviousness does not depend on or require showing a teaching, suggestion, or motivation to combine;

- Market demand, rather than scientific literature, can drive design trends and may show obviousness;
- In determining whether the subject matter of a patent claim would have been obvious, neither the particular motivation nor the avowed purpose of the named inventor controls;
- One of the ways in which a patent's subject can be proved obvious is by noting that there existed at the time of invention a known problem for which there was an obvious solution encompassed by the patent's claims;
- Any need or problem known in the field of endeavor at the time of invention and addressed by the patent can provide a reason for combining the elements in the manner claimed;
- "Common sense" teaches that familiar items may have obvious uses beyond their primary purposes, and in many cases a POSITA will be able to fit the teachings of multiple patents together like pieces of a puzzle;
- A POSITA is also a person of ordinary creativity, and is not an automaton;

- A patent claim can be proved obvious by showing that the claimed combination of elements was "obvious to try," particularly when there is a design need or market pressure to solve a problem and there are a finite number of identified, predictable solutions such that a POSITA would have had good reason to pursue the known options within his or her technical grasp; and
- One should not use hindsight in evaluating whether a claimed invention would have been obvious.

22. I also understand that an obviousness determination includes the consideration of various factors such as: (1) the scope and content of the prior art, (2) the differences between the prior art and the asserted claims, (3) the level of ordinary skill in the pertinent art, and (4) the existence of secondary considerations such as commercial success, long-felt but unresolved needs, failure of others, and so forth.

23. I am informed that it is improper to combine references where the references teach away from their combination. I am informed that a reference may be said to teach away when a person of ordinary skill in the relevant art, upon reading the reference, would be discouraged from following the path set out in the reference, or would be led in a direction divergent from the path that was taken by the patent applicant. In general, a reference will teach away if it suggests that the line of

development flowing from the reference's disclosure is unlikely to be productive of the result sought by the patentee. I am informed that a reference teaches away, for example, if (1) the combination would produce a seemingly inoperative device, or (2) the references leave the impression that the product would not have the property sought by the patentee. I also am informed, however, that a reference does not teach away if it merely expresses a general preference for an alternative invention but does not criticize, discredit, or otherwise discourage investigation into the invention claimed.

24. I am informed that even if a *prima facie* case of obviousness is established, the final determination of obviousness must also consider "secondary considerations" if presented. In most instances, the patentee raises these secondary considerations of non-obviousness. In that context, the patentee argues an invention would not have been obvious in view of these considerations, which include: (a) commercial success of a product due to the merits of the claimed invention; (b) a long-felt, but unsatisfied need for the invention; (c) failure of others to find the solution provided by the claimed invention; (d) deliberate copying of the invention by others; (e) unexpected results achieved by the invention; (f) praise of the invention by others skilled in the art; (g) lack of independent simultaneous invention within a comparatively short space of time; and (h) teaching away from the invention in the prior art.

25. I am further informed that secondary considerations evidence is only relevant if the offering party establishes a connection, or nexus, between the evidence and the claimed invention. The nexus cannot be based on prior art features. The establishment of a nexus is a question of fact. While I understand that Patent Owner here has not offered any secondary considerations at this time, I will supplement my opinions in the event that Patent Owner raises secondary considerations during the course of this proceeding.

**C. Analogous Art**

26. I have been informed that for a prior art reference to be proper for use in an obviousness analysis, the reference must be "analogous art" to the claimed invention. I have been informed that a reference is analogous art to the claimed invention if: (1) the reference is from the same field of endeavor as the claimed invention (even if it addresses a different problem); or (2) the reference is reasonably pertinent to the problem faced by the inventor (even if it is not in the same field of endeavor as the claimed invention). In order for a reference to be "reasonably pertinent" to the problem, it must logically have commended itself to an inventor's attention in considering his problem. In determining whether a reference is reasonably pertinent, one should consider the problem faced by the inventor, as reflected either explicitly or implicitly, in the specification. I believe that all of the references that my opinions in this IPR are based upon are well within the range of

references a person having ordinary skill in the art would consult to address the type of problems described in the Challenged Claims.

### D. Claim Construction

27. I understand that the claim terms in this IPR will be construed according to their plain and ordinary meaning as understood in light of the claim language, the patent's description, and the prosecution history viewed from the perspective of a POSITA. I further understand that where a patent defines claim language, the definition in the patent controls, even if there are other definitions that might be understood by those working in the art.

28. I was instructed to apply a construction of "media transformer" that captures a commercially available voice-to-text converter software module.

## IV. LEVEL OF A PERSON OF ORDINARY SKILL

29. Based on my review and analysis of the '990 and '866 Patents, the prior art cited herein, and the ordinary skill factors described in this section, a POSITA in the field of the '990 and '866 Patents at the time of the earliest possible priority date (July 25, 2002) would have been knowledgeable regarding the field of communication networks. In my experience working in this field, most workers of ordinary skill in the art as of the earliest possible priority date of July 25, 2002, would have had a master's degree in computer engineering, electrical engineering, or a related field, with at least 2 years of experience with wireless communications. *See,*

*e.g.*, *'990 Patent* (Ex. 1001), 1:15-22, 4:14-33, 10:55-12:2 (describing embodiments of '990 Patent); *'866 Patent* (Ex. 1038), 1:16-20, 4:18-55, 11:61-12:11 (describing embodiments of '866 Patent). A person with less relevant practical experience but with additional education can also qualify as a POSITA in the field of the '990 and '866 Patents. When I refer to the understanding of a POSITA, I am referring to the understanding of such a person as of July 25, 2002.

30. As of July 25, 2002, as set forth in detail above and in my cv, I had more than ordinary skill in the art. I am, however, familiar with the skills and knowledge possessed by those I would have considered to be of ordinary skill in the art as of that date.

31. My opinions provided in this declaration would not change in view of minor modifications to this level of ordinary skill.

## V. OVERVIEW OF THE TECHNOLOGY

32. The features described and claimed in the '990 and '866 Patents were routine as of July 25, 2002. In the following paragraphs, I briefly summarize the technology background for a few key features relevant to the opinions set forth herein.

### A. Wireless Networking

33. Wireless networking was well known before the priority date of the '990 and '866 Patents. In general, wireless networking is similar to wired networking

in that both involve connecting a number of devices so that the devices may communicate, transfer information, stream data or media, or otherwise communicate electronically, but wireless networking performs such functionality without the need for wires connecting the devices together. *Gast* (Ex. 1021), 3 ("Like all networks, wireless networks transmit data over a network medium. The medium is a form of electromagnetic radiation."). *Geier* (Ex. 1023), 34 ("Wireless networks perform functions similar to their wired ethernet and token-ring counterparts."), 34-35 ("1. The medium provides a bit pipe (a path for data to flow) for the transmission of data. … 4. Routing mechanisms move the data from the originating source to the intended destination.").

34. Numerous standards and commercially available technology existed for wireless networking before the priority date of the '990 and '866 Patents. For example, IEEE 802.11 included well-known standards for connecting devices in a wireless local area network (WLAN). *Gast*, 1 ("Wireless telephony has been successful because it enables people to connect with each other regardless of location. New technologies targeted at computer networks promise to do the same for Internet connectivity. The most successful wireless networking technology th[u]s far has been 802.11."). By April 2002, wireless networking such as WLAN was already widely used and IEEE 802.11 in particular had gained success. *Gast*, 6 ("802.11 is a success *now*. Apple initiated the pricing moves that caused the market

for 802.11 equipment to explode in 1999. Price erosion made the equipment affordable and started the growth that continues today.”).

35. IEEE 802.11 includes various versions that were developed over time. For example, the first version of the 802.11 standard was from 1997 and featured “both frequency-hopping and direct-sequence modulation techniques.” *Gast*, 6. The second version of the IEEE 802.11 standard, 802.11a, was from 1999, with 802.11a products released in 2000. *Id.* 802.11b was the third version of the standard, and was the “most common 802.11 equipment as this book was written.” *Id.* I note that *Gast* published in April 2002 and noted that 802.11b was the most common 802.11 standard used in the 2002 timeframe.

36. In a network, a server device generally provides a function, content, or data to a requesting device called a client device. *Geier* (Ex. 1023), 47 (“The server-based network operating system provides a centralized platform for applications and data storage for mobile users.”), *id.* (“A network operating system (NOS) such as Microsoft NT Server, hosted on a high-end PC, provides file, print, and applications services. Many NOSs are server oriented … where the core application software and databases reside. In most cases, the appliances [clients] will interface via TCP/IP with application software or a database running on the NOS.”). Similarly, the client device directs a user’s commands to a server. *Geier*, 48 (“Client software, located on the end-user’s appliance, directs the user’s commands to the local appliance

software or steers them out through the wireless network. The software residing on a wireless appliance is very similar to software that runs on a wired appliance."). It was well known that a server connected to the Internet (often referred to as a Web server) provides content to requesting client devices. For example, a web server may provide music, video, data, or files based on content stored at the server. *Janik*, [0043] ("PC has access via content services to downloadable digital audio files such as MP3 formatted audio files, MPEG-2 and MPEG-4 video files, as well as digital audio and video streams from Internet 8 servers."), [0044] ("PC can also route Internet 8 streams of content to webpad 32").

37. In a wireless network, devices connect to each other using hardware and software or other programming instructions. Wireless networks operated in layers such as Network, Data Link, and Physical (or PHY layer) or network. For example, mobile devices often include a wireless interface, such as a wireless transceiver, to send and receive signals wirelessly to/from other devices connected to the wireless network. *Gast* teaches one example. *Gast*, 3 ("The two media that have seen the widest use in local-area applications are infrared light and radio waves. … Radio waves can penetrate most office obstructions and offer a wider coverage range. It is no surprise that most, if not all, 802.11 products on the market use the radio wave physical layer.").

38. Another example of mobile devices with a wireless transceiver is *Janik*, which teaches a wireless LAN adapter 40 in a "webpad 32" (e.g., a PDA [personal digital assistant]). *Janik* (Ex. 1010), [0041]-[0043].

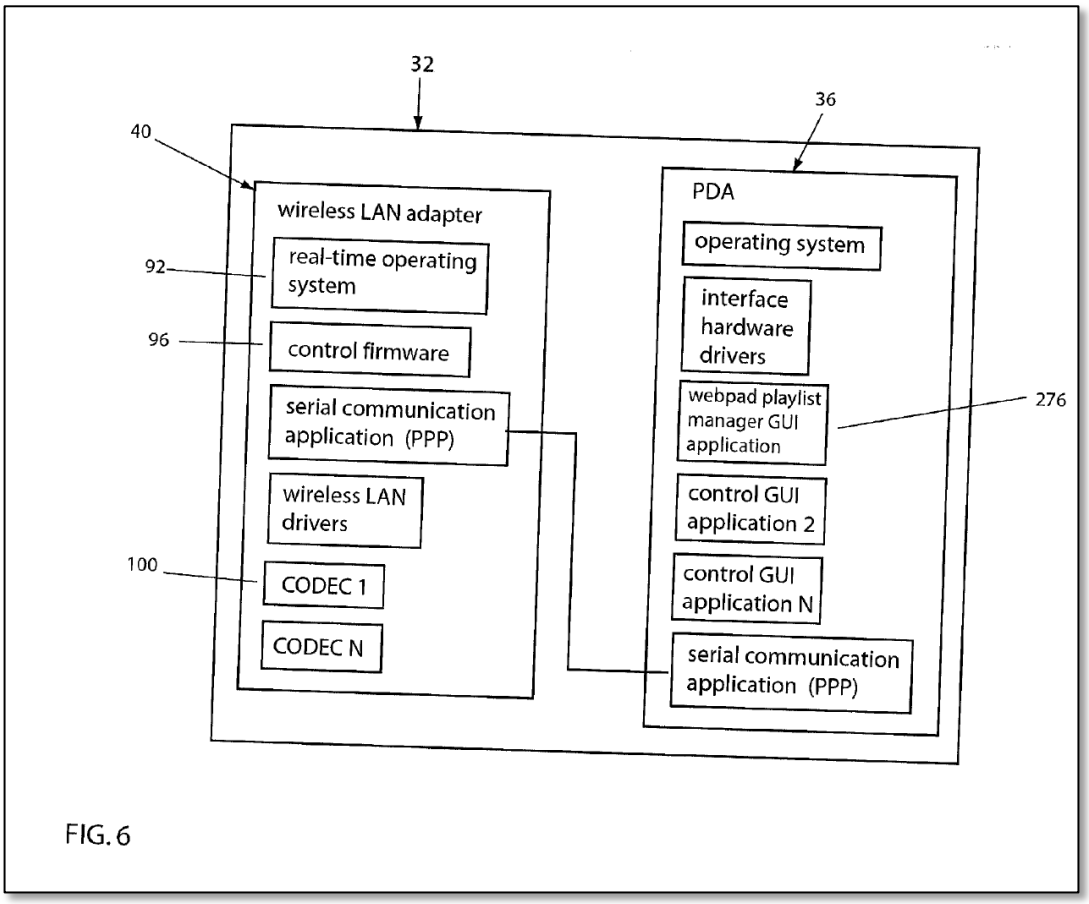


*Janik*, Fig. 6.

39. *Janik* further teaches components of wireless LAN adapter 40 include a wireless LAN transceiver 44. *Janik* (Ex. 1010), [0049]. *Janik* teaches wireless LAN transceiver 44 of wireless LAN adapter 40 is "capable of sending and receiving data using radio frequencies via a wireless data transfer protocol. Technology for

such a LAN is currently available and includes the Symphony wireless networking access point provided by Proxim, Inc." *Janik*, [0051].

**B. Cellular Networks**

40. Cellular networks were also well known before the priority date of the '990 and '866 Patents, including cellular networks utilizing wideband code division multiple access (WCDMA). For example, *Hagin-Metzer* teaches WCDMA is a cellular network. *Hagin-Metzer* (Ex. 1036), [0002] ("a cellular communication system such as Wideband Code Division Multiple Access (WCDMA)[.]"), [0011]-[0012].

41. In another example, *Lilja* also teaches WCDMA is a cellular network. *Lilja* (Ex. 1037), 2:35-36 ("WCDMA cellular radio system"), 3:15-30 ("…a cellular radio system which utilizes the WCDMA method[.]"), 5:2-11.

**C. Device Discovery and Service Discovery**

42. Before the priority date of the '990 and '866 Patents, it was known that mobile devices performed device discovery to locate other nearby devices with which to connect.

43. One well known industry standard for discovering nearby devices, pairing with devices, and performing communications between said devices was the Bluetooth specification. To establish a new Bluetooth connection, Bluetooth enabled

devices use what is called the "Inquiry" and "Page" (or "Paging") procedures, which are generally described in the Bluetooth V1.1 Core Spec. as follows:

> In order to establish new connections the procedures inquiry and paging are used. The inquiry procedure enables a unit to discover which units are in range, and what their device addresses and clocks are. With the paging procedure, an actual connection can be established. Only the Bluetooth device address is required to set up a connection. Knowledge about the clock will accelerate the setup procedure. A unit that establishes a connection will carry out a page procedure and will automatically be the master of the connection.

*BluetoothSpec*, (Ex. 1005), 96.

44. The Bluetooth Inquiry procedure begins with an inquiry message that is broadcast by a source or master unit that wants to discover other Bluetooth units that are within range. The inquiry message defines whether all Bluetooth enabled devices should respond (using the general inquiry access code or GIAC) or only a particular type of device should respond to the inquiry (using a number of dedicated inquiry access codes or DIAC). A Bluetooth enabled unit or slave unit that is in a discoverable mode allows itself to be discovered by regularly entering the "inquiry scan substate" to receive inquiry messages and respond thereto.

> The inquiry message broadcasted by the source does not contain any information about the source. However, it may indicate which class of devices should respond. There is one general inquiry access code (GIAC) to inquire for any Bluetooth device, and a number of dedicated

> inquiry access codes (DIAC) that only inquire for a certain type of devices. The inquiry access codes are derived from reserved Bluetooth device addresses and are further described in Section 4.2.1.
>
> A unit that wants to discover other Bluetooth units enters an inquiry substate. In this substate, it continuously transmits the inquiry message (which is the ID packet, see Section 4.4.1.1 on page 55) at different hop frequencies. The inquiry hop sequence is always derived from the LAP of the GIAC. Thus, even when DIACs are used, the applied hopping sequence is generated from the GIAC LAP. A unit that allows itself to be discovered, regularly enters the inquiry scan substate to respond to inquiry messages.

*BluetoothSpec*, (Ex. 1005), 105.

45. A discoverable Bluetooth unit that receives an inquiry message responds to the inquiring Bluetooth unit with an inquiry response message, which is a Frequency Hop Synchronization (FHS) packet containing the recipient's Bluetooth device address (BD_ADDR) and also the recipient's Class of Device.

> For the inquiry operation, there is only a slave response, no master response. The master listens between inquiry messages for responses, but after reading a response, it continues to transmit inquiry messages. The slave response routine for inquiries differs completely from the slave response routine applied for pages. When the inquiry message is received in the inquiry scan substate, a response message containing the recipient's address must be returned.

*BluetoothSpec*, (Ex. 1005), 108.

46. In order to establish a Bluetooth connection with a responding Bluetooth (slave) unit, the source or master unit carries out the Page Procedure, thereby forming a piconet. *BluetoothSpec*, (Ex. 1005) at 96-104. During the Page Procedure, the master unit will assign the slave unit an active member address (AM_ADDR) that is carried in the packet header for subsequent communications between the master and slave units. *BluetoothSpec*, (Ex. 1005), 51.

47. The Bluetooth specification also provides a Service Discovery Protocol (SDP) whereby, after establishing a communication link, a Bluetooth unit can obtain more detailed information about available services from another Bluetooth unit. *BluetoothSpec*, (Ex. 1005), 331-392. In particular, the Bluetooth specification teaches the "service discovery mechanism provides the means for client applications to discover the existence of services provided by server applications as well as the attributes of those services." *BluetoothSpec*, (Ex. 1005), 338. Further, the Bluetooth specification teaches the "attributes of a service include the type or class of service offered and the mechanism or protocol information needed to utilize the service." *Id.*

48. Various commercially available technologies existed before the priority date of the '990 and '866 Patents to perform such device discovery and capability determination. For example, *Han* teaches "SLP (Service Location Protocol), Jini*

from Sun Microsystems, Bluetooth's* SDP (Service Discovery Protocol), Microsoft*'s UP&P* (Universal Plug and Play), etc." *Han* (Ex. 1012), [0030].

49. Universal Plug and Play from Microsoft was used so a "universal plug and play (UPnP) device makes itself known and available for communication with other entities on a network through a set of processes-discovery, description, control, eventing, and presentation[.]" *Zintel* (Ex. 1016), 2:62-66. "Following discovery of a UPnP device, an entity can learn more about the device and its capabilities, or interact with the device, by retrieving the device's description from a URL provided by the device in an initial discovery message." *Zintel*, 2:67-3:4.

**D. Media Streaming**

50. Streaming audio and/or video was known well before the priority date of the '990 and '866 Patents. *Hartmaier* teaches "[s]treaming audio and/or video techniques provide a method of sending the audio or video data over the Internet as a continuous, compressed stream that is played for the user on the fly as it is received. Streaming allows the user to listen to or view received information almost as soon as it is received, as compared to playing downloaded audio or video files which may have a delay of several minutes while the entire file is transferred." *Hartmaier* (Ex. 1011), 2:17-21.

51. Further, *Hartmaier* teaches that "[s]treaming technology not only allows users to play prerecorded audio and video files, such as books, music or

videos that have been digitized and stored, but also allows users to receive live audio and video in realtime." *Hartmaier* (Ex. 1011), 2:24-26. *Hartmaier* teaches that "radio stations and television stations can stream their broadcasts over the Internet or any other computer network. Any other source of live or recorded audio or video can also be streamed to send users information or entertainment via the Internet." *Hartmaier*, 2:26-29. *Hartmaier* also teaches that devices such as a wireless telephone can receive such streaming content. *Hartmaier*, 18:1-2 ("any analog, digital, or PCS phone without restrictions as to standard or format"), 15:23-16:19 (teaching audio streaming of sports scores to wireless telephone 101), 17:12-18 (audio streaming to wireless telephone 101).

52. *Janik* teaches an example of a mobile device receiving streaming media content over a WLAN. For example, *Janik* teaches Internet servers with media content and a PC functioning as a proxy server on a network (e.g., wireless LAN). *Janik* (Ex. 1010), [0041]-[0043]. *Janik* teaches the proxy server streams content such as audio and video from Internet servers to mobile devices such as a PDA on the WLAN. *Id.* As depicted in Fig. 1 below, *Janik* teaches content and data on Internet servers 8, which is streamed to a PC (represented by element 64), and which is further streamed to client devices including a wireless webpad (PDA) 32:

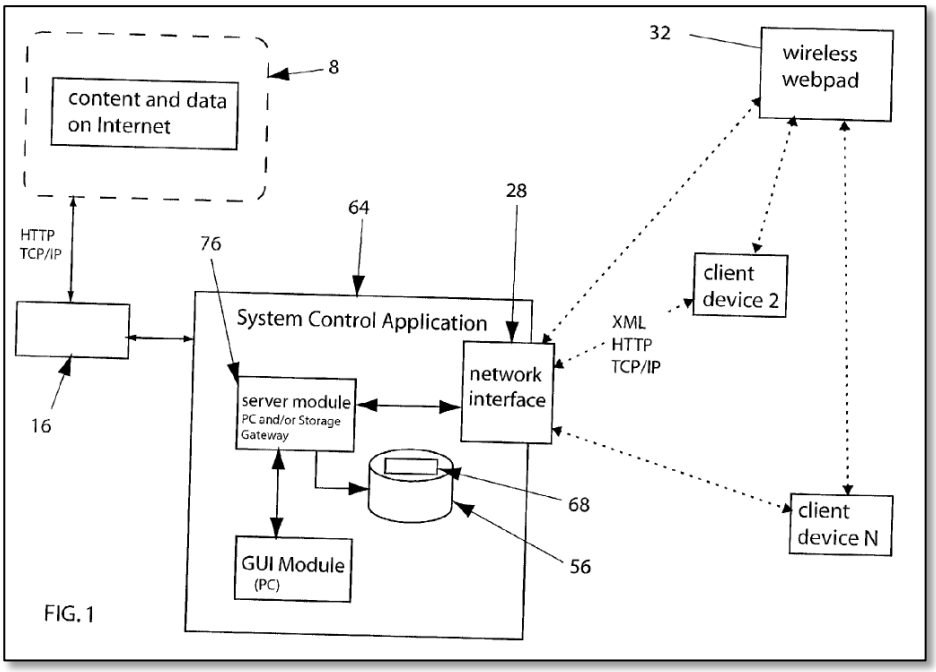


*Janik*, Fig. 1. I also note that *Janik* teaches using HTTP and TCP/IP for streaming connections between the Internet server 8, PC "64," and client devices and wireless webpad 32, as depicted in Fig. 1 above. *Janik*, [0007], [0030], [0036]-[0037], [0043]-[0044], [0054]-[0057], [0062]-[0063], [0081], [0084]-[0085], [0090].

53. *Han* teaches an example of streaming media from a mobile device to an end device. For example, *Han* teaches a portable device such as a PDA that streams content to a nearby output device with better capabilities, such as a TV screen or speaker. *Han* (Ex. 1012), [0032]. *Han* teaches the "user can also control which output data/stream is played/displayed on which output device, such that still images could be sent for display on the monitor of PC 36 or for outputting as hard copy at printer 38, while video images would be sent to TV 34." *Id.*

54. In another example, *Sirota* teaches a mobile device receiving streaming radio broadcasts over a wireless network. For example, *Sirota* teaches "Client system 102 represents a broad range of digital systems known in the art, including but are not limited to devices such as wireless mobile phones, palm sized personal digital assistants, notebook computers, desktop computers, set-top boxes, and game consoles." *Sirota*, [0026]. *Sirota* also teaches the mobile device client system 102 includes a streaming player 104 to play streaming content such as streaming radio. *Sirota*, [0025]-[0027], *see also generally* *Sirota*, [0014]-[0029].

**E. Streaming Protocols**

55. Application programs send streams of data to one of the Internet Transport Layer Protocols, either the **User Datagram Protocol** (**UDP**) or the **Transmission Control Protocol** (**TCP**). Before the priority date of the '990 and '866 Patents, one well-known protocol used for streaming was TCP/IP.[1] *Egli* teaches "TCP stands for Transmission Control Protocol. TCP is one of the main protocols in TCP/IP networks. Whereas the IP protocol deals only with packets, TCP enables two hosts to establish a connection and exchange streams of data. TCP guarantees

---

[1] I note that while TCP and IP are separate protocols, I refer to TCP/IP as a "protocol" for simplicity. Likewise, I refer to UDP/IP as a "protocol" rather than two separate protocols (UDP and IP) for simplicity.

delivery of data and also guarantees that packets will be delivered in the same order in which they were sent." *Egli* (Ex. 1015), [0022]. TCP and/or UDP receive the data stream from the sender and package them into *packets* with the destination address. The packets are sent to the next layer called Internet Network layer. The Internet Network layer packages the packet in an **Internet Protocol** (**IP**) datagram and sends it to a destination or gateway. Further, *Egli* teaches "TCP/IP: Stands for Transmission Control Protocol/Internet Protocol, the suite of communications protocols used to connect hosts on the Internet. TCP/IP uses several protocols, the two main ones being TCP and IP." *Egli*, [0023].

56. Another well-known streaming protocol was UDP/IP. For example, *Bergman* teaches that one use for UDP/IP was streaming sound files:

> On the Internet, streaming media is typically transferred or streamed to the receiving computer by a communications protocol known as UDP (User Datagram Protocol). Since IP (Internet Protocol) is packet-based, the packets are transferred in units known as datagrams. As known by those skilled in the art, UDP is a 'connectionless' protocol which uses IP to transmit datagrams while not making sure that all the packets reach their destination. This makes UDP ideal for use in applications where it is not essential for all of the packets to arrive, such as streaming sound files where the occasional lost packets do not make a noticeable difference to the listener.

*Bergman* (Ex. 1020), 4:28-5:5.

**F. Graphical User Interfaces (GUIs) and Touch Screens**

57. Mobile devices with graphical user interfaces, menus, and touch screens were well known before the priority date of the ’990 and ’866 Patents. For example, *Janik* teaches a webpad 32 (e.g., PDA) that includes a GUI to control functions of webpad 32. *Janik* (Ex. 1010), [0057]-[0059], [0062], [0079]-[0085], [0088], [0090]. *Janik* further teaches a PDA, for example, allowed a user to write on it with a stylus. *Janik*, [0026].

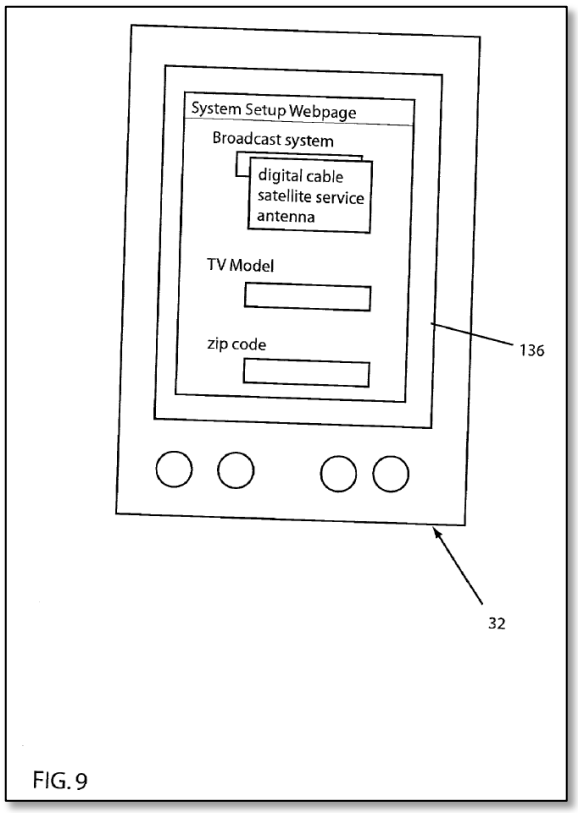


*Janik*, Fig. 9.

58. In another example, *Lutnaes* teaches a portable phone 10 with a touch screen display 20 for receiving commands from a user:

FIG. 1 shows a perspective view of an embodiment of a portable phone 10 according to the invention. The portable phone 10 is provided with a touch screen display 20 for displaying information such as telephone number(s), signal strength, battery level, roaming information etc, and intended for receiving commands from a user in a conventional way, as well as the inventive power-on function. The portable phone 10 has a main body 3, comprising a loudspeaker 6, an antenna 7, a microphone 8, and a flip 4, attached to the main body 3 by means of a flip hinge 4 a, and movable in relation to the main body 3, which flip 4 can be folded up against the main body 3. The flip 4 has input means 70, for example a keypad having a plurality of keys 9, where each key 9 corresponds to a desired function. The function of each key 9 can be determined by the software of the portable phone 10. The touch screen display 20 detects which key 9 has been pushed and carries out the desired function.

*Lutnaes* (Ex. 1018), 3:53-4:6.

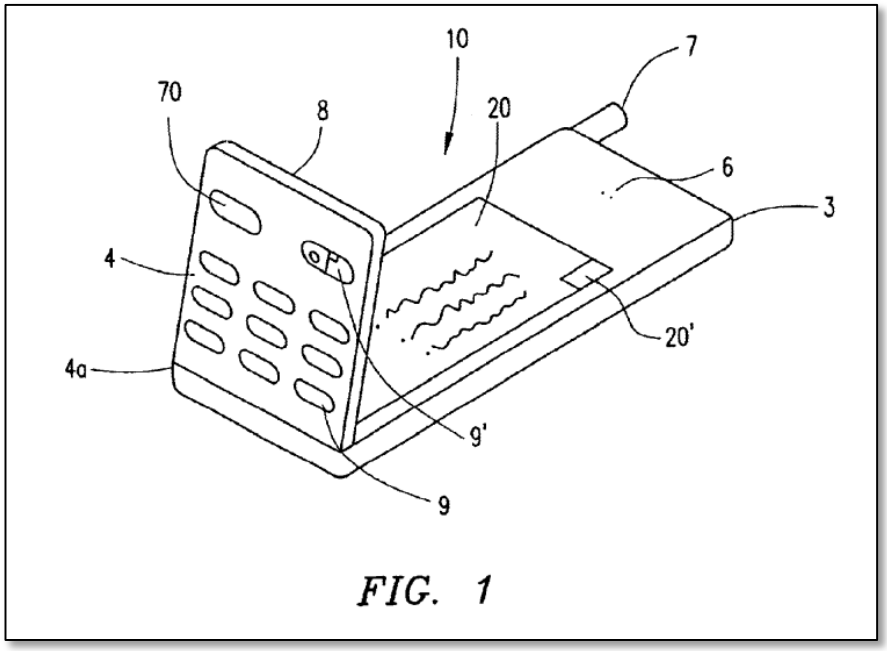


*FIG. 1*

*Lutnaes*, Fig. 1.

59. In another example, *Boda* teaches a mobile phone with a touch screen. For example, *Boda* teaches a terminal device 52 that is a mobile phone with a touch screen interface 4052. *Boda* (Ex. 1019), [0076] ("In this example the terminal device 52 is a WAP- and SMS-enabled mobile phone. The mobile phone has a touch screen interface 4052 and is wireless connection 5262 e.g. to a GSM (Global System for Mobile communication) or UMTS (Universal Mobile Telecommunication System) mobile communication network 62.").

**G. Mobile Device Hardware**

60. It was well known that mobile phones, PDAs, and other mobile devices included processors, memory, and processing instructions. For example, *Janik* teaches webpad 32 (e.g., PDA) includes a microprocessor 115 and memory such as DRAM memory 116. *Janik* (Ex. 1010), [0049]-[0051], [0053], [0059], [0063], [0078]-[0079], [0090], [0092] (teaching executing functions using the processor located in the wireless LAN adapter, the processor in the PDA, or both).

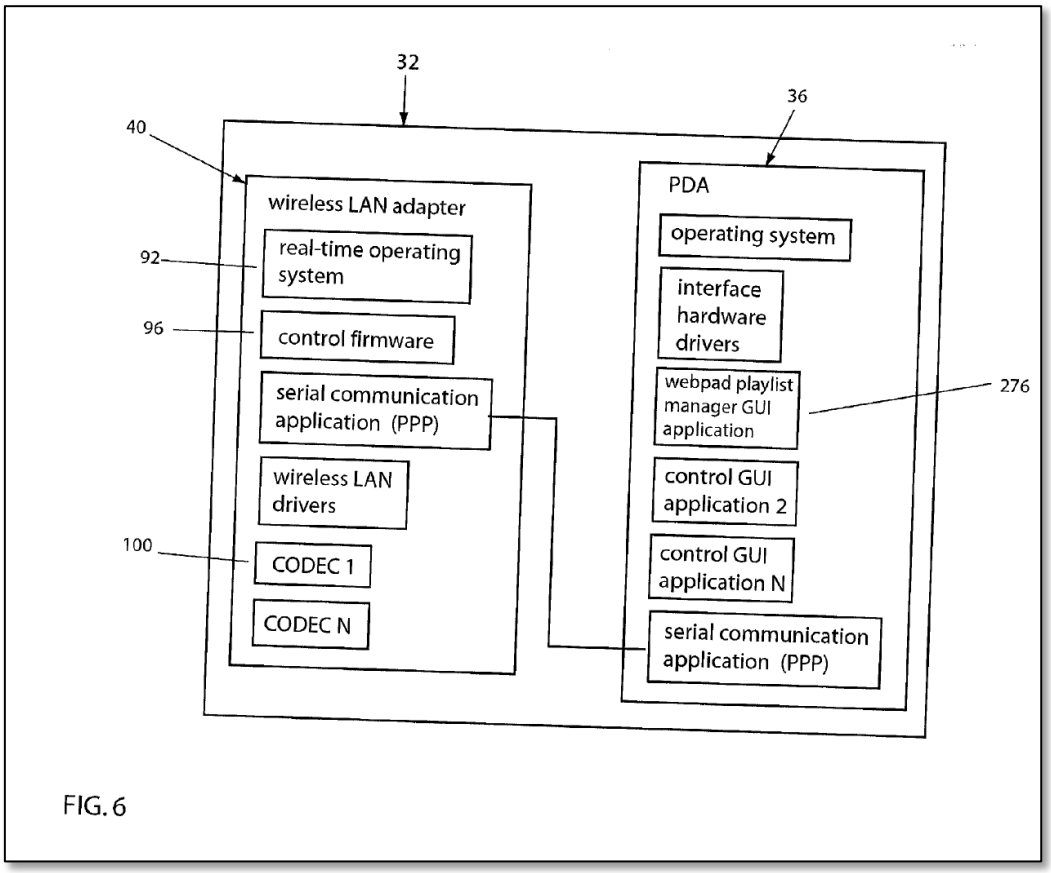


*Janik*, Fig. 6, *see also* Fig. 5.

61. It was also known to utilize hardware such as transceivers for ultra wide band (UWB) in mobile devices before the priority date of the ’990 and ’866 Patents. For example, *Miller* teaches “the UWB transceiver of FIG. 2 may be used as part of a local area network (LAN) connecting fixed structures or as part of a wireless personal area network (WPAN) connecting mobile devices, for example.” *Miller* (Ex. 1022), 22:4-7. Additionally, *Miller* teaches implementing such a UWB transceiver using a microprocessor system with programming instructions. *Miller*, 22:8-16 (“In any such implementation, all or a portion of the present invention may

be conveniently implemented in a microprocessor system using conventional general purpose microprocessors programmed according to the teachings of the present invention[.]"), 25:34-53 ("[T]he network link 1421 may provide a connection through a PAN 1423 to a mobile device 1429 such as a personal data assistant (PDA) laptop computer, or cellular telephone.").

### H. Auxiliary Rendering Devices (aka Helper Servers/Helper Devices)

62. It was also known to utilize the capabilities of "more capable" devices for rendering audio and/or video content before the priority date of the '990 and '866 Patents. For example, *Lin* teaches a mobile device 110 that transmits content to an auxiliary rendering device 120/121 because the auxiliary device has "a rendering module 211" with "better rendering capabilities than the rendering module 203 in the mobile device 110." *Lin* (Ex. 1013), [0039]. In one example, a loudspeaker is an auxiliary rendering device, which "allows rendering of audio content, such as music or speech. This way, the mobile device 110 does not need to render this audio content on its own loudspeaker, which in the case of a mobile telephone gives a much lower rendering quality compared to a dedicated loudspeaker system." *Id*. Similarly, *Lin* teaches using an auxiliary rendering device 121 which is a display "that is bigger and has better resolution and color capabilities than the display on the mobile device 110. The mobile device 110 can now let the auxiliary rendering device 121 render visual content, such as images, text or movies, rather than render it itself on its own

tiny display." *Id.* Fig. 3 below depicts mobile device 110 as well as auxiliary rendering devices 120 and 121.

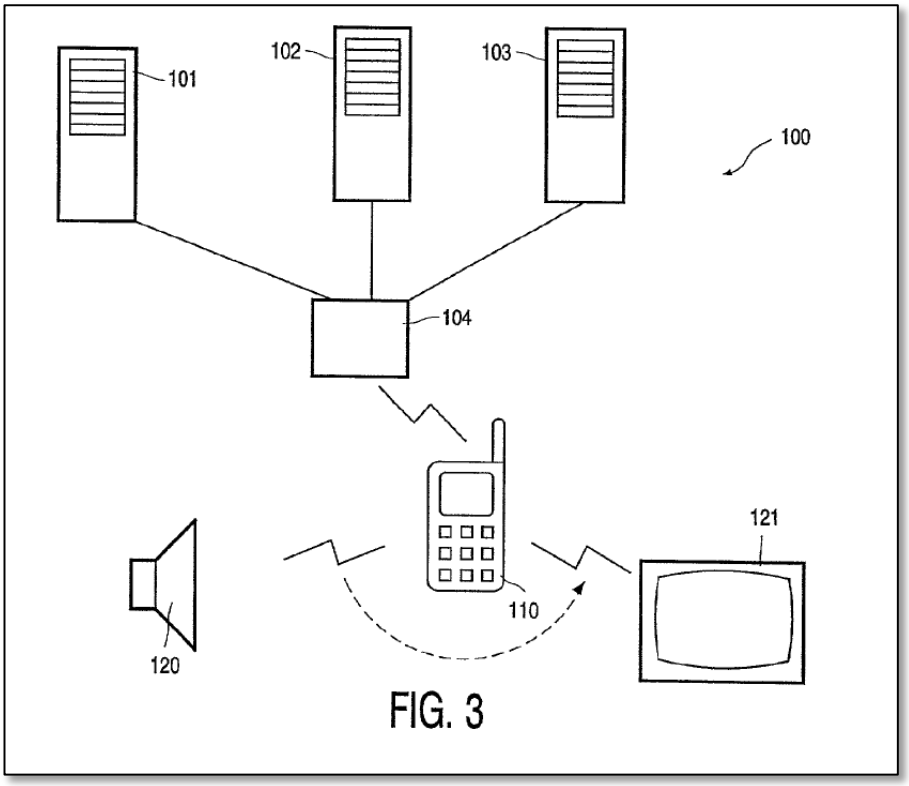


*Lin*, Fig. 3.

63. In another example, *Palin* teaches a mobile terminal (e.g., mobile phone, laptop computer, PDA) and larger external display device, where it is "particularly advantageous to enable the user to view the content, such as a video clip on a larger display, while the user is actually holding the mobile terminal, and allow the user to select what is viewed using the mobile terminal, or to otherwise use the mobile device while viewing the video clip. This would be best implemented using a wireless link between the mobile terminal and the external display." *Palin*

(Ex. 1014), 1:57-64, 2:16-25, 2:11-15 ("wirelessly linking display devices having different display capabilities to provide better display quality to a user of a mobile terminal with an economic and efficient short range RF link."). *Palin* teaches the content transmitted from the mobile device to the display device may be a "stream or plurality of still pictures, or graphics, or a conventional video." *Palin*, 2:29-32.

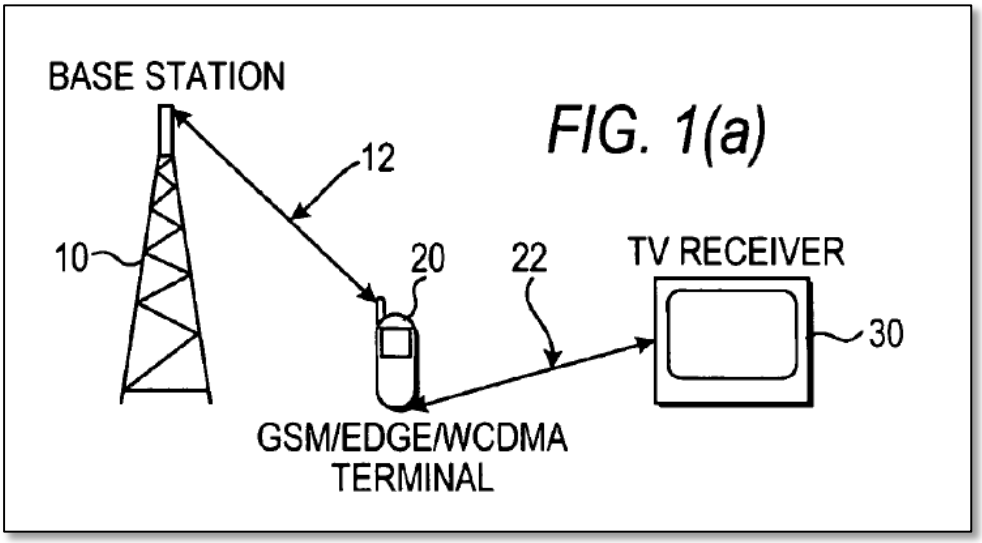


*Palin*, Fig. 1(a).

64. In yet another example, *Mershon* teaches that wireless audio rendering devices (e.g., wireless headphones and speakers) receiving wireless signals from a portable music player were well-known common helper servers. *Mershon* (Ex. 1024), 1:10-12, 1:20-28, 1:43-45. Notably, Mershon acknowledges that many wireless audio rendering devices were non-Internet enabled and required the use of (1) "a modular telecommunications device for an electronic unit such as a laptop computer" to "allow[] access to network, internet, and other computerized services"

or (2) "a hand held communication unit including a modem [and] wireless communication" to "perform[] … on-line data base services." *Mershon*, 1:41-52.

### I. Codecs

65. It was also known to utilize codecs (encoder/decoder) to perform media transformations such as digital-to-analog conversion and also including audio compression transforming media from high quality to low quality to reduce bandwidth and data rate, for example. One example is *Darby*. *Darby* teaches a mobile device that includes audio and video codecs. *Darby* (Ex. 1028), [0024]. The audio and video codecs "can be selectable rate codecs to permit use of higher data rates when available or when affordable." *Id.*

66. In another example of codecs, *Lee* teaches an MP3 player that includes a codec which "is composed of an encoder which converts analogue signals into digital signals and a decoder which converts digital signals into analogue signals." *Lee* (Ex. 1025), 2:57-63, 1:59-61, 3:1-4 ("The decoder in codec 172 converts digital signals into analogue signals, and the consumer hears music through an earphone or a headphone plugged into the audio jack 14."), 3:28-31 (teaching providing a codec in a cellular phone), 4:1-7.

67. In a further example of using a codec to reduce bandwidth, *Geiger* teaches a codec system may be implemented using a processor, and that the codec can perform compression and decompression. *Geiger* (Ex. 1026), Abstract ("A

codec system may be designed for the reduction of data bandwidth and storage requirements and for compressing/decompressing data."), [0009], [0013]-[0014], [0071], [0087], [0111] ("The codec system 200 may perform memory compression and decompression … to improve the effective data bandwidth and efficiency of system memory data transfers.").

68. In another example, *Jawerth* teaches a color video codec for encoding and decoding video such as 128x117 pixel size and 10 frames per second, achieving 30-50 times compression or even up to 100 times compression or greater for some video sequences. *Jawerth* (Ex. 1027), [0044].

**J. Bidirectional Communication Link**

69. Bidirectional communication links such as Bluetooth connections were well known in the art before the priority date of the '990 and '866 Patents. For example, *Irvin* teaches an object locating system where devices utilize the two-way functionality of Bluetooth technology. *Irvin* (Ex. 1031), Abstract, 6:21-26, 7:37-41. *Irvin* teaches the bidirectional functionality of Bluetooth: "Capitalizing on the two-way facilities of the Bluetooth interface, the mobile terminal 210 transmits the poll signal (block 440) and then waits on a found signal (block 450). In response to being polled, the specific tag 240 to which the poll signal was directed transmits a return signal to the mobile terminal 210." *Irvin* (Ex. 1031), 6:21-26.

**K. Media Type Requirements**

70. Before the priority date of the ’990 and ’866 Patents, it was well known for devices to become aware of the media type requirements or capabilities of other devices and be able to transmit data according to such requirements. One example is *Heuvelman*, which teaches “…a method, software and control device that leverages on relevant information available on a data network for transport of a content that is streamed… it can include information on an end-user’s presentation or rendering means, including capabilities and properties of physical devices such as destination devices like a display monitor or a speaker.” *Heuvelman* (Ex. 1035), [0004]. *Heuvelman* further teaches that “[a]t the latest at the moment of initialization of the transmission, the transmitter must have some knowledge of the capabilities of the receiver. This may include knowledge on a device processing capability (e.g., which encoding standard is supported) and receiver’s storage capability (e.g., for allowing some video buffering in case a retransmission of a video package is required). *Heuvelman* (Ex. 1035), [0033].

**L. Media Transformation**

71. It was also known to use speech-to-text software to perform media transformations. One example, *Oba*, teaches a mobile speech transformation device that assists hearing impaired individuals in communication. *Oba* (Ex. 1033), Abstract, 1:9-15. Additionally, *Oba* teaches that one embodiment “…could have one

CPU to perform 'speech-to-text synthesis' for converting speech input to text data and outputting it to the display 26[.]" *Oba* (Ex. 1033), 25:12-14.

72. *Oba* also teaches using text-to-speech software to perform media transformations: "…information on speech content (rhythmic information) or information on sound pitch or loudness (prosody-related information) can be adjusted to the sound pitch easiest for the user to hear, in keeping with the properties of the user's hearing impairment, by using text-to-speech synthesis to create speech from text information." *Oba* (Ex. 1033), 13:41-47.

**M. Media Cloner**

73. Cloning (or copying) media/data to be transferred to and used in multiple places was known before the priority date of the '990 and '866 Patents. For example, *Kraft* teaches copying and pasting of text messages on portable phones. *Kraft* (Ex. 1032), Abstract, 1:45-55, 2:5-7, 2:20-30, 2:57-60. Further, *Kraft* teaches "[a] phone including a CPU controlling a plurality of applications, a working storage that holds data and programs used in said applications and storage means acting as a clipboard when copying and pasting data from one application to another." *Kraft* (Ex. 1032), Abstract. *Kraft* also teaches that "[a]ccording to one embodiment, a part of the RAM 14 acts as a clipboard for the copy and paste function for the phone according to the invention. The clipboard is reset every time the phone is switched

off, and the clipboard is only active when the user has copied some data into it." *Kraft* (Ex. 1032), 4:15-19.

74. Another example, *Kodimer*, teaches copy and paste functionality on a personal computer (PC). *Kodimer* (Ex. 1030), Abstract, 3:1-34, 5:39-51, 5:66-6:14, 6:37-41, 9:12-18. More specifically, *Kodimer* teaches, "A computer implemented method for storing data from an instance of an application program into at least one of a plurality of buffers includes the steps of bringing an application program into focus[,] selecting data in the application program[,] selecting a store operation such as… a 'copy' operation[,]… and automatically storing the selected data into the selected one of the buffers. In a similar manner[,] data can be recalled from the buffers[,] such as in a 'paste' operation…" *Kodimer* (Ex.1030), Abstract.

## VI. OVERVIEW OF THE '990 AND '866 PATENTS

75. I have reviewed the '990 Patent (Ex. 1001) and '866 Patent (Ex. 1038). Descriptions of the '990 and '866 Patents that may be pertinent to my analysis are provided below. This discussion does not represent my entire understanding of the '990 and '866 Patents.

### A. The '990 and '866 Patents' Alleged Invention

76. Both patents share a specification. Accordingly, I provide a single overview that applies equally to both patents, citing the '990 Patent as representative. The '990 Patent is directed to streaming data (e.g., audio and/or video)

communications where media streamed to a "limited capability device" (e.g., mobile phone) is rerouted to a "more capable device" (e.g., standalone display, speakers, etc.). *'223 Patent* (Ex. 1001), 1:15-19, 4:14-51. Fig. 1 below depicts an incoming phone call originally received at a mobile phone. The audio is cloned with one copy of the audio sent to a fixed line phone and a second copy of the audio converted to text and displayed on a monitor:

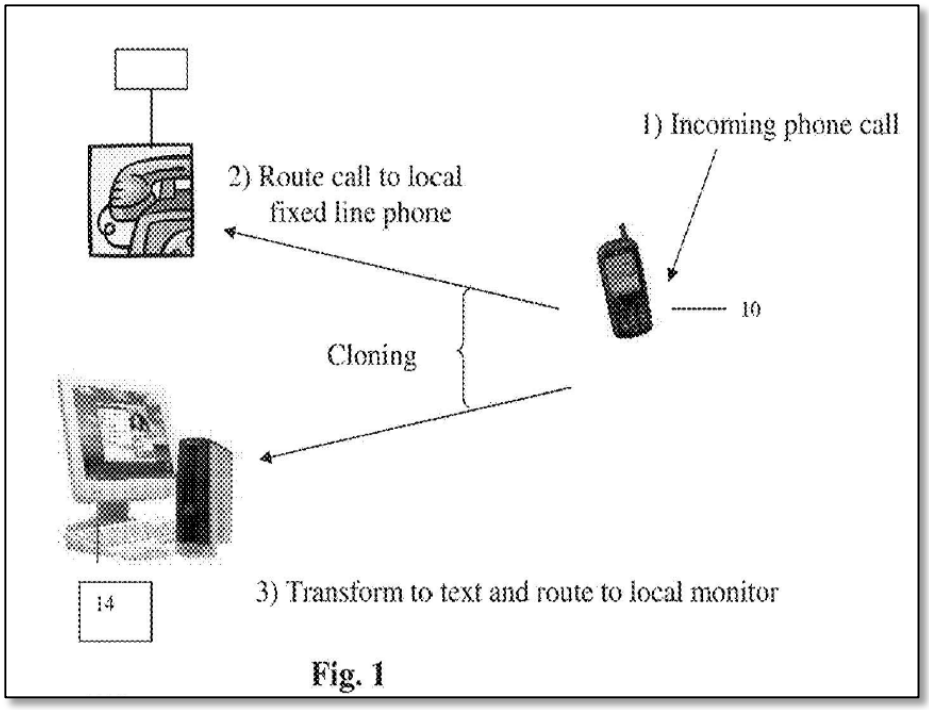


**Fig. 1**

*'990 Patent*, Fig. 1. Described scenarios include routing streaming audio (e.g., music or voice calls) to a speaker and routing streaming video to a TV or computer monitor. *Id.*, 10:10-41. The '990 Patent explains that such cloning can beneficially allow hearing impaired individuals to participate in phone calls. *Id.*, 11:52-12:2 (teaching that, by transforming a cloned copy of the audio to text and displaying it on a nearby

monitor, the "hearing impaired person 'hears' the conversation by reading the text appearing on the monitor" and can respond verbally via the phone's microphone).

**B. The '990 Patent's Prosecution**

77. I have reviewed the prosecution history for the '990 Patent (Ex. 1002). Pertinent aspects of the prosecution history of the '990 Patent are described below.

78. The '990 Patent claims its earliest priority to a US provisional application filed July 25, 2002. *'990 Patent*, 1:7-10. I understand Apple is adopting this earliest possible priority date for purposes of the IPR, and I have been asked to assume this priority date for my analysis.

79. The Challenged Claims require a mobile device that wirelessly receives a single incoming data stream, scanning a local wireless network for a device that can handle the data stream, selecting a compatible device, cloning a data stream, transforming at least some of the cloned data streams via a media transformer, and routing the cloned data streams from the mobile device to a plurality of compatible devices. *See, e.g.*, *'990 Patent*, Claim 1. During prosecution of the application that issued as the '990 Patent, the Examiner concluded that the closest prior art references—Ortiz, Fano, Mousseau, and Hesse—failed to teach the lengthy amended claims, including the media transformer and media cloner. *'990 FH*, 452-456, 473-475 (Notice of Allowability). As I opine below, these concepts were known in the prior art.

### C. The '866 Patent's Prosecution

80. The Challenged Claims require a mobile device wirelessly receiving a single incoming data stream, scanning a local wireless network for a device that can handle the data stream, selecting a compatible device, cloning a data stream, transforming at least some of the cloned data streams via a media transformer, and routing the cloned data streams from the mobile device to a plurality of compatible devices. *See, e.g.*, '*866 Patent*, Claim 22. During prosecution, original claims 50-52 (which issued as challenged claims 22-24, respectively) were subjected only to an obvious-type double patenting rejection, which was overcome by filing a terminal disclaimer. *'866 FH*, 178 (first office action indicating claims 50-52 were allowable), 227-50 (second office action advancing obvious-type double patenting rejection over U.S. Patent No. 7,969,990), 272-73 (terminal disclaimer submitted). As set forth in the detailed Ground below, the claimed concepts were well known in the art.

## VII. PROPOSED GROUNDS OF UNPATENTABILITY

| Proposed Ground of Unpatentability for the '990 Patent | |
|---|---|
| **Ground 1** | Claims 1-3, 9, and 24 are **obvious** under § 103(a) over *Chihara*, *BluetoothSpec*, *Everett*, and *Chang* |

| Proposed Ground of Unpatentability for the '866 Patent | |
|---|---|
| **Ground 1** | Claims 22-24 are **obvious** under § 103(a) over *Chihara*, *BluetoothSpec*, *Everett*, and *Chang* |

81. Above, I have reproduced the Proposed Grounds of Unpatentability from the Petitions for ease of reference.

## VIII. OVERVIEW OF THE PRIOR ART

### A. Overview of Chihara

82. *Chihara* teaches method of routing a data stream (e.g., phone call audio, video) from a mobile device to a plurality of compatible devices (e.g., wireless headset, video watch) on a local wireless network (e.g., Bluetooth) where the devices are identified as compatible to handle the data stream. *Chihara*, [0001], [0078]-[0081], [0109]-[0118], Figs. 7, 9, 13.

83. Because *Chihara*, like the ’990 and ’866 Patents, discloses routing media between electronic devices, *Chihara* is in the same field of endeavor as the ’990 and ’866 Patents. *Compare Chihara* [0001], [0078]-[0081], [0109]-[0118], Figs. 7, 9, 13, *with ’990 Patent*, 1:15-19 and *’866 Patent*, 1:16-20. Indeed, *Chihara* teaches routing media such as phone call audio to a wireless headset as well as routing video, images, and/or text to a watch apparatus. *Chihara*, Abstract, [0078]-[0083], [0100], [0115]-[0117], Figs. 8-9, 15.

84. Further, *Chihara* and the ’990 and ’866 Patents attempt to improve upon limitations with streaming media to mobile devices by routing media to peripheral devices. *Compare Chihara*, [0001], [0078]-[0083], [0109]-[0118], Figs. 7-9, 13, 15 *with ’990 Patent*, 1:15-19, *generally* 10:60-12:2 and *’866 Patent*, 1:16-

20, *generally* 11:1-12:11. Therefore, *Chihara* is reasonably pertinent to a problem described by the ’990 and ’866 Patents.

### B. Overview of BluetoothSpec

85. I note that *BluetoothSpec* includes metadata indicating a creation date of February 22, 2001 and a last modified date of February 23, 2001, as depicted in the screenshots below. The first two screenshots depict metadata from *BluetoothSpec’s* document properties from the Internet Archive page. The third screenshot below depicts metadata as depicted when viewing the document properties of a downloaded copy of *BluetoothSpec* in Adobe Acrobat.

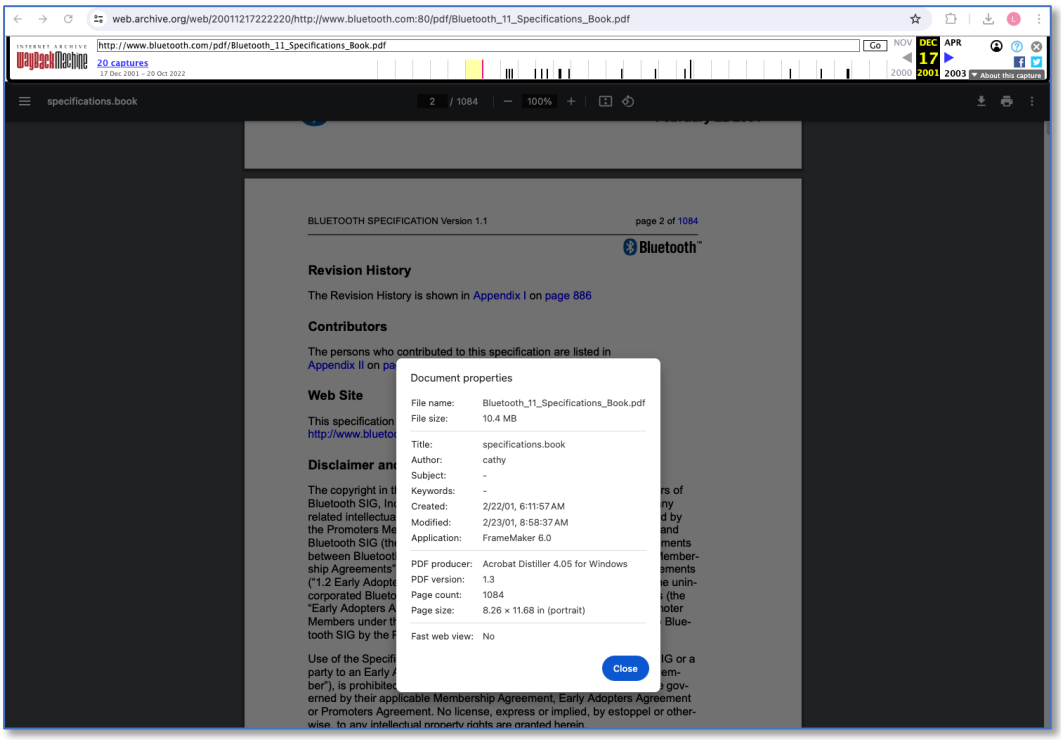
web.archive.org/web/20011217222220/http://www.bluetooth.com:80/pdf/Bluetooth_11_Specifications_Book.pdf
http://www.bluetooth.com/pdf/Bluetooth_11_Specifications_Book.pdf
Go
20 captures
17 Dec 2001 – 20 Oct 2022
specifications.book
2 / 1084
100%
BLUETOOTH SPECIFICATION Version 1.1
page 2 of 1084
Bluetooth
Revision History
The Revision History is shown in Appendix I on page 886
Contributors
Web Site
Disclaimer and
Document properties
File name: Bluetooth_11_Specifications_Book.pdf
File size: 10.4 MB
Title: specifications.book
Author: cathy
Subject: -
Keywords: -
Created: 2/22/01, 6:11:57 AM
Modified: 2/23/01, 8:58:37 AM
Application: FrameMaker 6.0
PDF producer: Acrobat Distiller 4.05 for Windows
PDF version: 1.3
Page count: 1084
Page size: 8.26 x 11.68 in (portrait)
Fast web view: No
Close

Document properties

| | |
|---|---|
| File name: | Bluetooth_11_Specifications_Book.pdf |
| File size: | 10.4 MB |
| Title: | specifications.book |
| Author: | cathy |
| Subject: | - |
| Keywords: | - |
| Created: | 2/22/01, 6:11:57 AM |
| Modified: | 2/23/01, 8:58:37 AM |
| Application: | FrameMaker 6.0 |
| PDF producer: | Acrobat Distiller 4.05 for Windows |
| PDF version: | 1.3 |
| Page count: | 1084 |
| Page size: | 8.26 × 11.68 in (portrait) |
| Fast web view: | No |

Close

Document Properties

Description | Security | Fonts | Initial View | Custom | Advanced

Description

| | |
|---|---|
| File: | Bluetooth_11_Specifications_Book.pdf |
| Title: | specifications.book |
| Author: | cathy |
| Subject: | |
| Keywords: | |
| Created: | 2/22/01, 6:11:57 AM |
| Modified: | 2/23/01, 8:58:37 AM |
| Application: | FrameMaker 6.0 |

Additional Metadata...

86. *BluetoothSpec* teaches using mobile electronic devices to route media data between a plurality of mobile electronic devices. *BluetoothSpec*, 41-47, 335, 338, 371, 515-18.

87. Because *BluetoothSpec*, like the '990 and '866 Patents, discloses routing media between electronic devices, *BluetoothSpec* is in the same field of endeavor as the '990 and '866 Patents. *Compare BluetoothSpec*, 41-47, 335, 338, 371, *with '990 Patent*, 1:15-19 and *'866 Patent*, 1:16-20.

88. Further, *BluetoothSpec* and the '990 and '866 Patents attempt to improve upon announcing device availability and scanning surroundings to determine available and compatible devices. *Compare BluetoothSpec*, 41-47, 335, 338, 371 *with '990 Patent*, 1:15-19, *generally* 10:60-12:2 and *'866 Patent*, 1:16-20, *generally* 11:1-12:11. Therefore, *BluetoothSpec* is reasonably pertinent to a problem described by the '990 and '866 Patents.

**C. Overview of Everett**

89. *Everett* and the '990 and '866 Patents propose solutions for facilitating phone calls involving hearing impaired[2] individuals, employing speech-to-text

---

[2] I note that *Everett* uses the phrase "hearing-impaired," which a POSITA would have understood would have been synonymous with the phrase "hearing impaired" (without hyphen) used in the '990 Patent.

transformation of phone call audio and displaying that text to a call participant. *Compare Everett*, 1:47-56, 2:19-23, 2:35-38, 2:44-48, 2:66-3:5, 3:21-52, Figs. 1-2 *with '990 Patent*, 5:41-57, 11:53-12:2, Fig. 1 and *'866 Patent*, 5:47-63, 11:61-12:11. *Everett* teaches the same speech-to-text media transformation as the '990 and '866 Patents, and also uses a mobile device to perform said transformation. Therefore, *Everett* is reasonably pertinent to a problem described by the '990 and '866 Patents. *Compare Everett*, 1:8-13, 1:47-56, 2:19-3:5, 3:21-52, 4:45-47 (teaching various mobile devices), Figs. 1-2 *with '990 Patent*, 5:41-57, 11:53-12:2, Fig. 1 and *'866 Patent*, 5:47-63, 11:61-12:11.

**D. Overview of Chang**

90. *Chang* teaches an electronic system routing media data from an information apparatus to an output device to be output in the form text, graphics, images, video, and sound. *Chang,* [0001]-[0002], [0073], [0095]-[0096], [0189].

91. Because *Chang*, like the '990 and '866 Patents, discloses routing media between electronic devices, *Chang* is in the same field of endeavor as the '990 and '866 Patents. *Compare Chang*, [0001]-[0002], [0046], [0050]-[0060], [0073]-[0074], [0078], [0089]-[0090], [0095]-[0096], [0189], [0191]-[0192], [0203], [0222], [0259]-[0267], Figs. 9A-9F, *with '990 Patent*, 1:15-19 and *'866 Patent*, 1:16-20.

92. Further, both *Chang* and the '990 and '866 Patents attempt to improve upon limitations with utilizing a user interface (such as a screen or buttons) of a mobile computing device to accept user input and to select a nearby output device with which to connect and to select various options for the output to be displayed/rendered at the output device (for example, color output). *Compare Chang*, [0001]-[0002], [0046], [0050]-[0060], [0073]-[0074] (including teaching user interface examples and that a user "interface may be implemented in software or hardware or a combination."), [0078], [0089]-[0090], [0095]-[0096], [0189], [0191]-[0192], [0203], [0222], [0259]-[0267], Figs. 9A-9F *with '990 Patent*, 1:15-19, 2:44-47, *generally* 10:60-12:2 and '866 Patent, 1:16-20, 2:49-52, *generally* 11:1-12:11. Therefore, *Chang* is reasonably pertinent to a problem described by the '990 and '866 Patents.

## IX. OPINIONS REGARDING GROUND 1 ('990 PATENT): CLAIMS 1-3, 9, AND 24 ARE OBVIOUS OVER *CHIHARA*, *BLUETOOTHSPEC*, *EVERETT*, AND *CHANG*

### A. Claim 1(Pre) - Apparatus for rerouting communication data, comprising:

93. To the extent the preamble is limiting, *Chihara* teaches Claim 1(Pre). *Chihara* discloses a mobile video telephone system ("apparatus for rerouting communication data") comprising a mobile telephone, a wrist watch-type information apparatus, and a wireless headset. *Chihara*, [0078]. In one embodiment, *Chihara* teaches mobile videophone system 10B comprises mobile telephone 11B,

wrist watch-type information apparatus 12B[3], and headset 13, as depicted in Fig. 7 below:

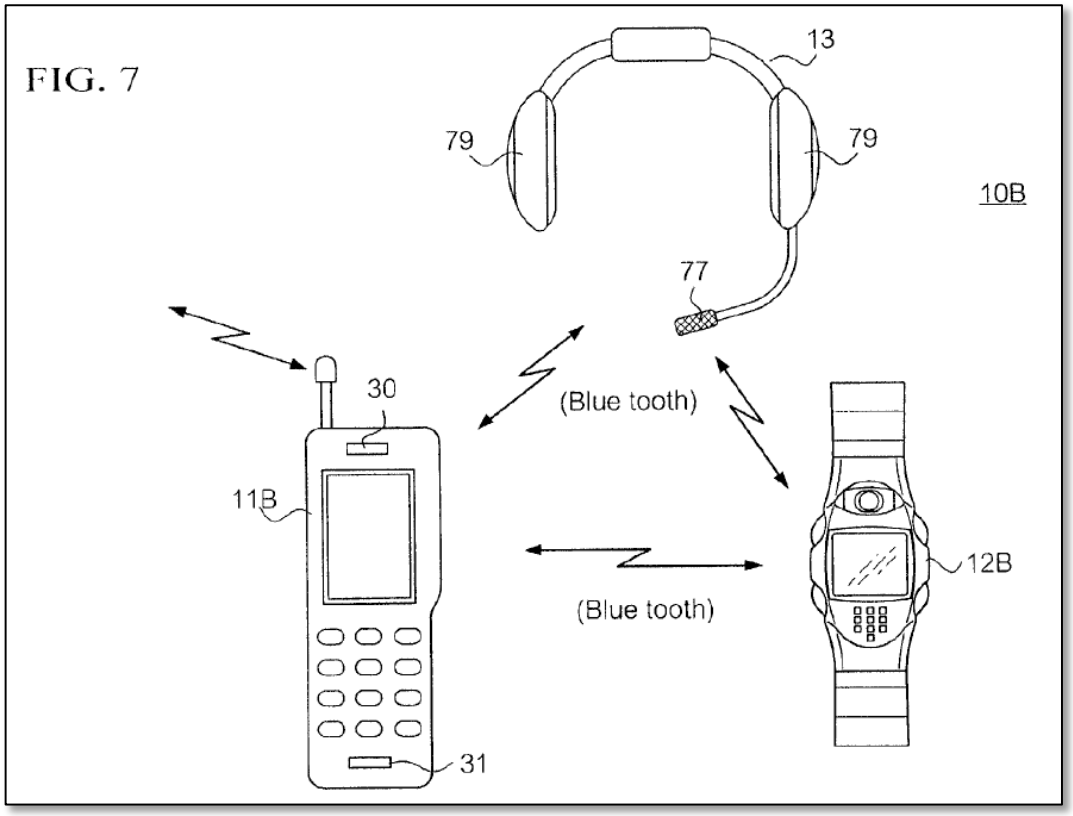


[3] A POSITA would have understood that reference to wrist watch-type information apparatus 12A is a typographical error in *Chihara*. *See Chihara*, [0101], [0108] stating "wrist watch-type information apparatus 12A." Elsewhere, the watch apparatus is referred to as 12B. *See Chihara*, *generally* [0078]-[0079], [0081]-[0084], [0090], [0100]-[0105], Figs. 7-9, 12A-12B, 13, 15.

*Chihara*, Fig. 7. *Chihara* teaches that each of mobile telephone device 11B, wrist watch-type information apparatus 12B, and headset 13 communicate with each other via local bidirectional radio communication (short-distance radio communication) using, for example, Bluetooth. *Chihara*, [0079]-[0080], [0083], [0110]. Indeed, Fig. 7 above depicts bidirectional arrows indicating bidirectional Bluetooth connections between each of the phone, headset, and watch apparatus. Also, regarding the connections between these devices, a POSITA would have understood that Bluetooth utilizes "master" and "slave" roles for devices in the piconet. Fig. 13 below depicts a Bluetooth piconet with the mobile telephone as the "master" device and the headset and wrist watch-type apparatus as "slave" devices.

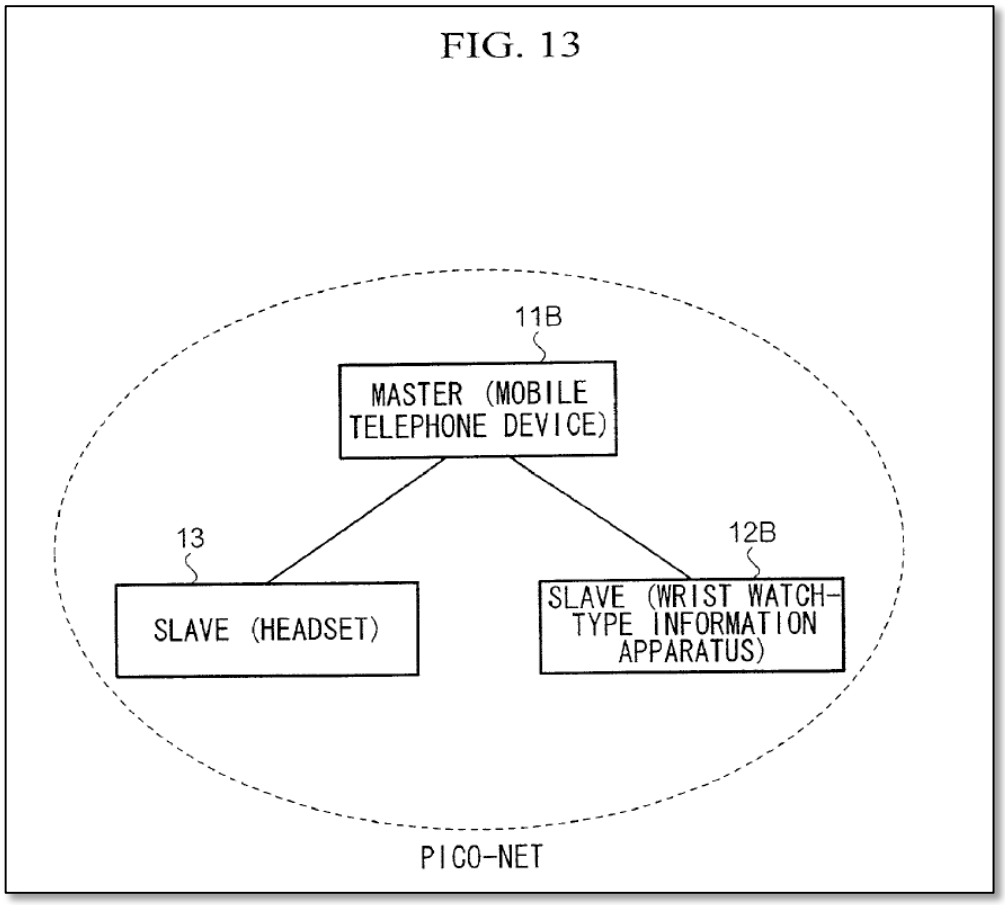


*Chihara*, Fig. 13.

94. As described below, the mobile telephone device reroutes phone call audio to a selected headset and video or text to a selected wrist watch-type information apparatus using Bluetooth, and the selected headset and wrist watch-type information apparatus route information back to the mobile phone (and ultimately to a calling party on the other end of the phone call or video call) using the bidirectional Bluetooth connection. A POSITA would have understood that in this manner, the phone call audio between the headset and the mobile device is bidirectional communication via the Bluetooth connection and the connection

between the mobile phone and the watch apparatus also utilizes bidirectional communication via Bluetooth.

95. Regarding rerouting communication data, *Chihara* teaches rerouting phone call audio from the mobile telephone that receives the call to another device (e.g., headset 13). A POSITA would have understood that such would have been rerouting because the phone call is originally directed to the mobile device, and the mobile phone reroutes the call audio to the headset. For example, *Chihara* teaches that mobile telephone device 11B "can establish communication with a telephone set connected to a fixed telephone network or another mobile telephone set accommodated in a mobile communication network." *Chihara*, [0079], [0109]. *Chihara* teaches that "upon receipt of the voice data from the calling party, the microprocessor 23B of the mobile telephone device 11B sends to the [B]luetooth module 22 an instruction to transmit packets to the headset 13." *Chihara*, [0110]. After said instruction is transmitted, "a series of voice data received from the calling party are sent to the [B]luetooth module 22. The [B]luetooth module 22 places on the SCO packets the voice data received from the calling party, and transmits them to the headset 13 (step S21)." *Id.* Upon receipt of the packets, the headset processes the packets and outputs the call sound from speaker 79. *Chihara*, [0111]. Similarly, the user can speak with the calling party via the headset's microphone (e.g., microphone 77), such that the communication between the headset and mobile phone

is bidirectional. *Chihara*, [0080], [0111]-[0113], Fig. 9. Indeed, a POSITA would have understood that such communication is bidirectional because the phone call audio includes audio from the calling party, which is rerouted to the headset, and the user speaks into a microphone of the headset, and that audio is routed to the mobile phone and further to the calling party. *Chihara*, [0080], Fig. 7 (depicting microphone 77). *See also* Claim 1(a)(ii) regarding bidirectional communication.

96. Similarly, *Chihara* teaches routing image data from the calling party to the wrist watch-type information apparatus (and vice versa). *Chihara*, [0114]-[0118], [0006]-[0009], Fig. 7. Indeed, *Chihara* teaches a mobile videophone system, where a user can use the wrist watch apparatus to both display and capture images/video, and can route the images/video back to the calling party. *Chihara*, [0049], [0078]-[0083], [0100], [0116]-[0117], [0132], Figs. 7-8, 15.

**B. Claim 1(a) - a mobile communication device comprising:**

97. *Chihara* teaches a mobile videophone system 10B, including mobile telephone device 11B ("mobile communication device"). *Chihara*, [0078]-[0081], [0113], Figs. 7, 9.

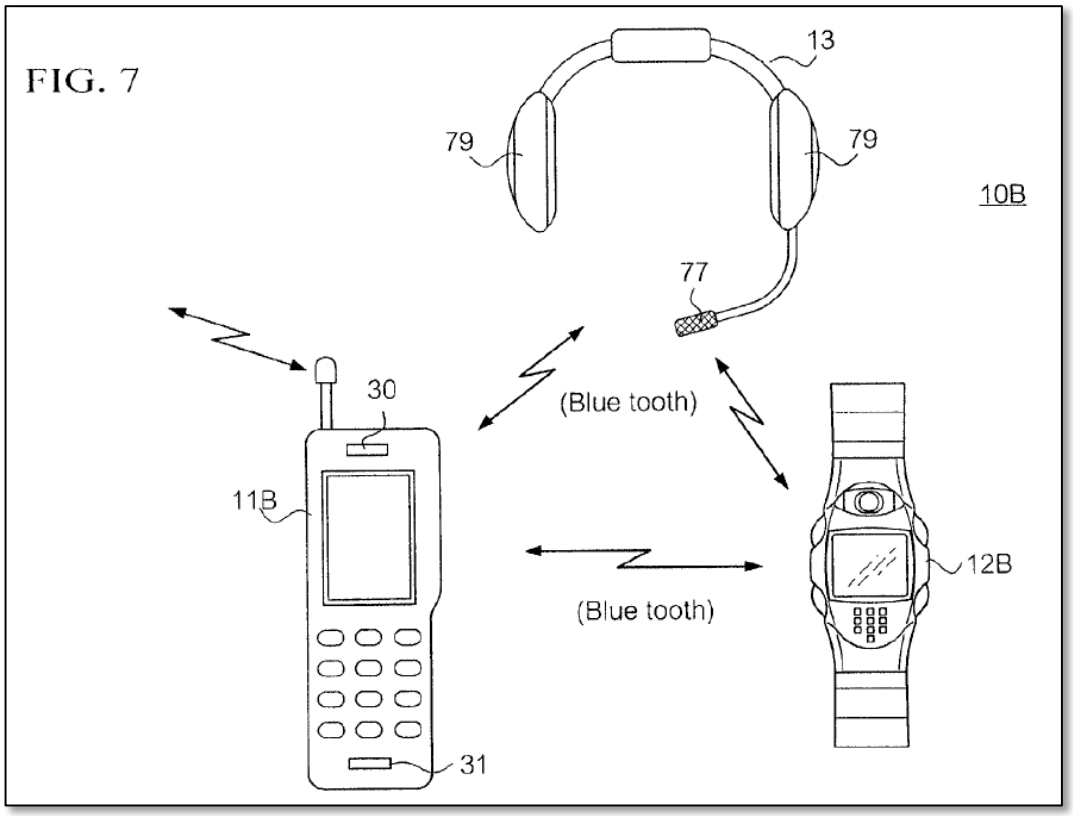


*Chihara*, Fig. 7, *see also* Fig. 9.

98. A POSITA would have understood that *Chihara's* mobile phone is a mobile communication device that makes and receives phone calls. *Chihara*, [0013], [0079] ("The mobile telephone device 11B can process the image sequence by such as MPEG4, and can establish communication with a telephone set connected to a fixed telephone network or another mobile telephone set accommodated in a mobile communication network."), [0080], [0102]-[0103], [0049], [0057], [0073], [0109], [0113] ("This voice data is transmitted through the W-CDMA baseband processing unit 28 and the RF unit 27 under the control of the microprocessor 23B, and sent to the calling party through the base station 14 and the mobile communication

network[.]"), [0118]. *See* mappings for Claims 1(a)(i)-1(a)(iv), which are hereby incorporated.

### C. Claim 1(a)(i): an announcer device associated with said mobile communication device, and configured for indicating to surrounding equipment that said mobile communication device is available to receive rerouting, thereby to enable receipt of rerouted data from said surrounding equipment, and

#### *1. Announcing Availability to Receive Rerouted Data From Surrounding Equipment*

99. I understand that Petitioner Apple is asking the Board to adopt Patent Owner's interpretation of the Announcing Limitation. I have included the following discussion from the Petition that explains Patent Owner's interpretation and have applied this interpretation below. Limitations 1(a)(i) and 1(a)(ii) recite an "announcer device" and a "scout device," each associated with the "mobile communication device." Per Claim 1(a)(ii), the "scout device" scans the surroundings to identify surrounding available and compatible equipment such that the "mobile communication device" can "reroute data from [itself] to a selected one of said surrounding equipment" ("the Scouting Limitation"). In other words, the "mobile communication device" sets up communication links that enable it to receive data and reroute that data ***to*** one or more other compatible devices in the vicinity.

100. Claim 1(a)(i) recites an "announcer device" in the same mobile communication device that indicates to surrounding equipment that the mobile

communication device is available to "receive rerouting, thereby to enable receipt of rerouted data from said surrounding equipment" ("the Announcing Limitation"). The plain claim language suggests the reverse of Claim 1(a)(ii)—the subject mobile communication device is receiving rerouted data ***from*** surrounding equipment, rather than rerouting data ***to*** surrounding equipment.

101. In the parallel litigation, despite parroting the claim language of a mobile device "receiv[ing] rerouting," Patent Owner has repeatedly and consistently interpreted Claims 1(a)(i) and 1(a)(ii) and Claims 22(a)(i) and 22(a)(ii) to capture a single scenario in which a mobile device reroutes data ***to*** surrounding equipment. The following excerpt from Patent Owner's July 1, 2023 Complaint has remained unchanged through multiple revised infringement allegations in the parallel litigation:

> ***Apple mobile devices such as iPhones*** comprise an announcer device associated with said mobile communication device, and ***configured for indicating to surrounding equipment that said mobile communication device is available to receive rerouting***, thereby to enable receipt of rerouted data from said surrounding equipment via the Wi-Fi connection.
>
> For example, ***an Apple mobile apparatus*** (e.g., a smartphone or tablet) ***announces its availability to receive data from surrounding equipment***.
>
> . . .

> Connecting to the Wi-Fi network, the Apple mobile apparatus (e.g. the wi-fi client) announces itself ***by sending probe request frames in accordance with the wi-fi protocol***.
>
> . . .
>
> ***Once connected to the Wi-Fi network, an Apple mobile apparatus*** (e.g., an iPhone) ***<u>can receive streaming data to then be rerouted to compatible equipment in the vicinity</u>***, connected to the same network in accordance with Wi-Fi network capabilities.

Ex. 1042, 07-01-2023 Complaint, Ex. H at 2; *see also* Ex. 1044, 02-06-2024 Infringement Allegations Update, 5 (same), Ex. 1046, 05-17-2024 Preliminary Infringement Contentions, 132 (same). Per Patent Owner's allegations, the Announcing Limitation does not require the mobile communication device to establish connections that enable it to receive rerouted data ***from*** those devices. Instead, the Announcing Limitation, like the Scouting Limitation, is satisfied where a mobile communication device communicates with surrounding devices in order to configure one or more wireless communication links over which it can reroute data ***to*** surrounding equipment.

102. Similarly, Patent Owner's allegations for the '866 "Announcing Limitation" are consistent with the excerpt above, but slightly less detailed. However, like the '990 allegations, Patent Owner has consistently mapped the '866 Patent claims to a scenario in which the alleged "streaming device" (e.g., Apple's iPhone) reroutes streaming media to surrounding devices, rather than receiving

rerouted streaming media from those surrounding devices. See Ex. 1043, 07-01-2023 Complaint, Ex. G at 49-53; see also Ex. 1045, 02-06-2024 '866 Patent Infringement Allegations Update, 1-11, Ex. 1046, 05-17-2024 Preliminary Infringement Contentions, 96-106. Per Patent Owner's allegations, the Announcing Limitation does not require the streaming device to establish connections that enable it to receive rerouted data from those devices. Instead, the Announcing Limitation, like the Scouting Limitation, is satisfied where a streaming device communicates with surrounding media handling devices in order to configure one or more wireless communication links over which it can reroute data to surrounding media handling devices.

103. For purposes of this proceeding, Petitioner proposes this Board adopt Patent Owner's interpretation of the Announcing Limitation. *See Western Digital Corporation v. SPEX Technologies, Inc.*, IPR2018-00084, Paper 14, *11 (PTAB Apr. 25, 2018); *see also General Electric v. Vestas,* IPR2018-00928, Paper 9, *16-17 (PTAB Nov. 5, 2018); *10x Genomics, Inc. v. Bio-Rad Laboratories, Inc.*, IPR2020-00086, Paper 8, *19 (PTAB Apr. 27, 2020) (finding "judicial efficiency will be enhanced by allowing Petitioner to rely upon a claim construction that Patent Owner is relying upon in the related district court litigation to assert infringement of the challenged patent").

***2. Chihara Teaches an Announcer Device and Rerouting Data***

104. As discussed above, *Chihara* teaches a mobile videophone system that reroutes data (e.g., phone call audio) received at mobile telephone device 11B to headset 13 and wrist watch-type apparatus 12B. *See* Claim 1(Pre), 1(a). Also as discussed above, *Chihara* teaches a mobile videophone system including mobile telephone device 11B, headset 13, and wrist watch-type apparatus 12B, which communicate via Bluetooth connections using Bluetooth modules (e.g., Bluetooth module 35 of mobile telephone device 11B) where said Bluetooth modules are controlled by processors. *Id.*; *Chihara*, [0081]. As discussed below, *Chihara* teaches bidirectional communication between the mobile telephone, headset, and wrist watch-type apparatus, such that a POSITA would have understood that the mobile telephone would have been enabled to receive rerouted data from the headset and wrist watch-type apparatus ("surrounding equipment") and vice versa. Indeed, a POSITA would have understood that such bidirectional connections between devices would have enabled rerouting data from one device to another. For example, *Chihara* depicts such bidirectional communications using double-ended arrows representing bidirectional Bluetooth connections between devices. *See* Figs. 7, 9. *See* Claim 1(a)(ii).

105. *Chihara* teaches that any of the devices (e.g., mobile phone, headset, or wrist watch-type apparatus) *may be* a "master" device, but in the third embodiment, mobile telephone 11B *is* the "master" device. *Chihara*, [0101] ("According to this

embodiment, the mobile telephone device 11B is determined as a master and the wrist watch-type information apparatus 12B and the headset 13 as slaves to configure the pico-net shown in FIG. 13"). Therefore, as discussed in detail below, a POSITA would have understood that Bluetooth module 35 (controlled by a microprocessor and configured to transmit an ID packet) of mobile telephone device 11B would have functioned as an "announcer device" to indicate availability of mobile telephone 11B. I note that the master device indicates its availability to surrounding equipment using a Bluetooth module controlled by a microprocessor and configured to transmit an ID packet, and since mobile telephone device 11B is the master device in at least one embodiment, Bluetooth module 35 (controlled by a microprocessor and configured to transmit an ID packet) of mobile telephone device 11B functions as an "announcer device," as claimed. Indeed, as I discuss in detail below, such signaling from Bluetooth module 35 would have indicated to surrounding devices that the mobile device (which includes Bluetooth module 35) is available to receive rerouting.

106. Annotated Fig. 9 below depicts a block diagram of *Chihara*'s system, including **(1)** mobile telephone 11B (annotated blue), which includes Bluetooth module 35 (annotated green) and microprocessor 23 (annotated pink); **(2)** headset 13 (annotated red), which includes Bluetooth module 72 (annotated green) and microprocessor 13; and **(3)** wrist watch-type apparatus 12B (annotated yellow),

which includes Bluetooth module 42B (annotated green) and watch CPU 43B (annotated pink):

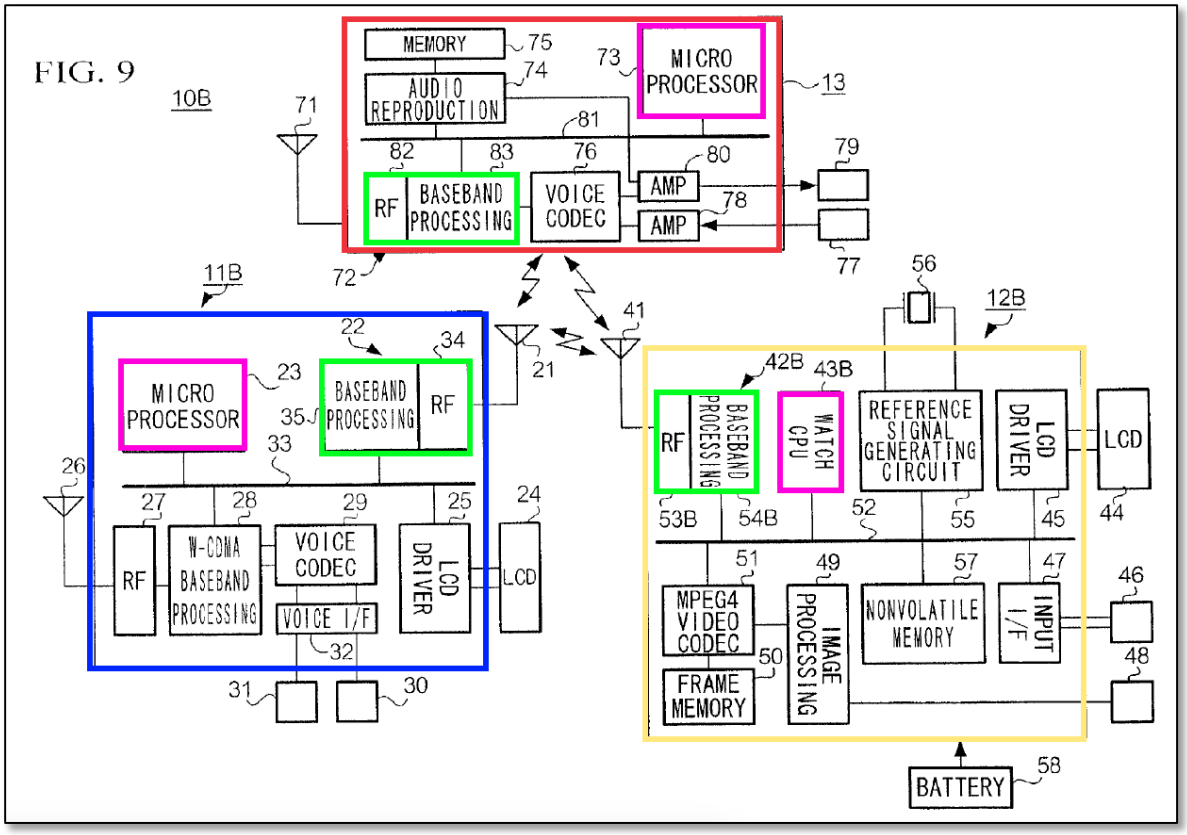


*Chihara*, Fig. 9 (annotated).

107. *Chihara* teaches that the microprocessor of each device performs numerous functions, including functions related to wireless communication involving the respective Bluetooth modules. *Chihara*, [0081] ("With the microprocessor 23B according to this embodiment … the communication link is established with each of the wrist watch-type information apparatus 12B and the headset 13 through the bluetooth module 35[.]"), *id.* ("[U]sing these communication links, the microprocessor 23B transmits and receives information to and from the

wrist watch-type information apparatus 12B and the headset 13."), [0080] ("The bluetooth module 72, the microprocessor 73 … are connected to each other through a bus 81."), [0050] ("A microprocessor 23 includes memories (not shown) such [as] a ROM and a RAM for storing various data. The microprocessor 23 uses these memories to control the communication and applications, and control the whole of the mobile telephone device 11[.]"), [0054], [0109]-[0114], [0130]. Indeed, a POSITA would have understood that microprocessor 23 controls the mobile device, including directing the functions of its components such as Bluetooth module 35.

108. A POSITA would have understood that Bluetooth is an ad-hoc networking setup, where devices are not permanently linked nor is networking limited to previously-paired devices but devices are dynamically discovered, paired, and connected. For example, I note that *BluetoothSpec* teaches that "Bluetooth implementers . . . take advantage of the dynamic, ad-hoc characteristics of the Bluetooth environment[.]")). *BluetoothSpec*, 515. Indeed, the "ad-hoc" nature of Bluetooth would have indicated to a POSITA that its connections are dynamic rather than static. Further, a POSITA would have understood that Bluetooth discovers nearby Bluetooth-enabled devices, not just devices owned by the user of the device performing the scanning. For example, Bluetooth device discovery processes would have located any Bluetooth-enabled device that is powered on and responding to inquiries within range of the "master" device that performs the Bluetooth inquiries

and would not have limited the search to only devices owned by a particular individual. Thus, a POSITA would have understood that even though *Chihara* teaches a single user owning a mobile telephone, headset, and wrist watch-type information apparatus, *Chihara's* mobile telephone would have discovered any available nearby Bluetooth-enabled devices for pairing, not just those owned by the user of the mobile telephone.

109. I note this concept would have been understood by a POSITA because it was known in the prior art. For example, this Bluetooth arrangement is taught by both *Palin* and *Chang*. *Palin*, 7:26-42 ("…responding Bluetooth unit and its host device, which would include any Bluetooth-enabled external display device in the coverage area.") and *Chang*, [0185], [0191]-[0205], [0263]-[0265] ("the user may be presented with all the printers 106, if any, that are available to take the print job."), Figs. 5 (502 "Any Available Output Device?"), 9A-9F). Accordingly, teachings of locating "all" and "any" Bluetooth-enabled devices within range of the Bluetooth "master" device would have been understood by a POSITA to include locating all devices rather than only those owned by a particular user.

110. Additionally, while *Chihara* teaches previously-paired devices may be in a low-power "park" mode, a POSITA would have understood that Bluetooth does not require such previous-paired connections, and new connections with devices may be formed based on discovered available Bluetooth-enabled devices within

scanning range, such as *Chihara's* headset, wrist watch-type apparatus, or other nearby Bluetooth-enabled devices (e.g., external display). I note that *Chang* teaches this concept. *Chang*, [0185], [0191]-[0205], [0263]-[0265] ("the user may be presented with all the printers 106, if any, that are available to take the print job."), Figs. 5 (502 "Any Available Output Device?"), 9A-9F).

111. *Chihara* does not describe the low-level Bluetooth protocol details implicated when mobile telephone device 11B uses its Bluetooth module (controlled by a processor) to indicate to surrounding equipment (e.g., headset 13, wrist watch-type apparatus 12B) that said mobile telephone device is available to receive rerouting. However, *BluetoothSpec* provides these details, as discussed below, and a POSITA would have been motivated to modify *Chihara* per *BluetoothSpec's* teachings for the reasons I discuss below.

#### ***3. BluetoothSpec Teaches Announcing Availability – Inquiry Substate***

112. *BluetoothSpec* teaches that a "master"/"host" device transmits inquiry messages to discover other nearby Bluetooth devices during an inquiry procedure. *BluetoothSpec*, 559, 561. Specifically, the "inquiry substate is used by the unit that wants to discover new devices." *BluetoothSpec*, 107. *BluetoothSpec* teaches that an "inquiry procedure enables a unit to discover which units are in range, and what their device addresses and clocks are." *BluetoothSpec*, 96, 105 ("During an inquiry substate, the discovering unit collects the Bluetooth device addresses and clocks of

all units that respond to the inquiry message. It can then, if desired, make a connection to any one of them by means of the … page procedure.”).

113. During the inquiry procedure, an “ID packet” is transmitted from a “master” device to a “slave” device, and said ID packet comprises an inquiry access code (IAC). *BluetoothSpec*, 96, 55 (an “identity of ID packet consists of the device access code (DAC) or inquiry access code (IAC). It has a fixed length of 68 bits. It is a very robust packet since the receiver uses a bit correlator to match the received packet to the known bit sequence of the ID packet. The packet is used, for example, in paging, inquiry, and response routines.”). Table 10.5 below depicts the messaging from the master to slave in step 1, which includes transmitting an ID packet that comprises an inquiry access code, and further depicts the inquiry response in step 2 from the slave to the master:

| step | message | direction | hopping sequence | access code |
|---|---|---|---|---|
| 1 | ID | master to slave | inquiry | inquiry |
| 2 | FHS | slave to master | inquiry response | inquiry |

*Table 10.5: Messaging during inquiry routines.*

*BluetoothSpec*, 109 (“Table 10.5”). For example, *BluetoothSpec* Table 10.5 teaches messaging that occurs during inquiry routines. For the first step, an ID message is transmitted from master to slave and includes an inquiry access code. For the second step, an FHS message is transmitted in the reverse direction, that is, from slave to master, as a response, and also includes an inquiry access code. Regarding the

inquiry access code transmitted in the ID packet, a "master" device may transmit a "general inquiry access code" (GIAC) that "is common to all Bluetooth units" or may send "a set of dedicated inquiry access codes" (DIAC) that are "used to inquire for classes of devices." *BluetoothSpec*, 142, 105.

114. A POSITA would have understood that in some instances a mobile device would have sought out only a particular class of devices, for example, to utilize audio output services or video display services. In other instances, a mobile device may have sent an inquiry message to all available devices regardless of the device class. In particular, *BluetoothSpec* teaches examples of service classes, such as a printer service class. *BluetoothSpec*, 344, 347-348 (teaching video game class, movie class, and others). Thus, a master device, such as a mobile phone, would have utilized a service class (whether general or dedicated) to indicate which class(es) of devices should respond.

115. A POSITA would have understood that Bluetooth module 35 would have been an "announcer device" associated with a mobile communication device (e.g., mobile telephone 11B) "master" device because said Bluetooth module transmits an ID packet comprising an IAC (whether GIAC or DIAC) to surrounding equipment (headset 13, wrist watch-type information apparatus 12B). A POSITA would have understood that transmitting such inquiry messages during inquiry routines would have indicated that the mobile device is available to receive rerouting

or to route/reroute content, including media content, because the purpose of the inquiry routine is for a master device to locate slave devices with which to pair. A POSITA would have understood that such pairing establishes bidirectional communication links between master and slave devices, such that the devices can transmit data/media to/from one another, which would have included rerouting data or media content.

116. Further, a POSITA would have understood that a Bluetooth module transmitting an ID packet comprising an IAC would have indicated to surrounding equipment that the mobile device is available to receive rerouting because such signaling indicates that the mobile device is powered on and transmitting signals to discover nearby "slave" devices (e.g., headset, wrist watch-type information apparatus), which are used for routing/rerouting (e.g., phone call). A POSITA would have understood that such messaging would have occurred to locate devices with which to pair and to establish bidirectional communication links, thus such messaging would have indicated that a mobile device would have been available to receive rerouting. *See* Claim 1(a)(ii).

#### *4. Motivation to Combine Chihara and BluetoothSpec*

117. A POSITA would have been motivated to implement *Chihara* according to *BluetoothSpec's* teachings, relying on the Bluetooth standard implementation details to perform functionalities for which *Chihara* expressly

identifies Bluetooth as a preferred embodiment. Indeed, I note that *Chihara* teaches devices that each include a Bluetooth module, and a POSITA would have been motivated to implement *Chihara* such that its Bluetooth modules would have followed standard Bluetooth implementation protocols. A POSITA thus would have recognized the benefits from implementing *BluetoothSpec's* teachings, including the inquiry substate process, allowing a mobile device to announce its availability and discover nearby devices using Bluetooth procedures while conforming to the protocols and guidelines of the Bluetooth specification *BluetoothSpec*. Such a modification would have advantageously ensured compatibility between devices of various manufacturers by adhering to standard Bluetooth protocols, for example. Further, such a modification would have been use of a known technique of applying *BluetoothSpec's* programming instructions to *Chihara's* Bluetooth module and would have improved *Chihara* in the same way as *BluetoothSpec*. Such a modification to Bluetooth programming instructions (e.g., software) would have been straightforward and simple for a skilled artisan, including because *BluetoothSpec* teaches such programming instructions.

118. To the extent it is argued that *Chihara's* Bluetooth module was inadequate or that altering programming instructions was infeasible, a POSITA would have been motivated to perform a simple substitution of a Bluetooth module conforming to *BluetoothSpec* instead of *Chihara's* native Bluetooth module. Such

modules were commercially available, off-the-shelf components, and such a simple substitution would have yielded the predictable result of a Bluetooth module conforming to *BluetoothSpec*. A POSITA would have had a reasonable expectation of success when substituting a Bluetooth module conforming to *BluetoothSpec* for *Chihara's* Bluetooth module because such would have been a straightforward modification, and Bluetooth-enabled devices were well known in the prior art.

119. Modifying *Chihara* pursuant to *BluetoothSpec* would have advantageously improved *Chihara's* Bluetooth devices to function according to the known techniques of the *BluetoothSpec* to ensure interoperability with other Bluetooth-enabled devices, including from various manufacturers (e.g., mobile phones, headsets, wrist watch-type apparatuses printers). Further, such a modification would have allowed *Chihara's* mobile telephone to pair with any available Bluetooth-enabled device in the scanning region rather than relying on previously connected devices in "park" mode. Further supporting this conclusion, utilizing such inquiry routines would have allowed a mobile device to announce its availability and to locate Bluetooth-enabled devices of either a general class or particular class for pairing. Such a use of a known technique would have advantageously allowed *Chihara's* mobile telephone to pair with various Bluetooth-enabled devices (e.g., external display) beyond only the headset and wrist watch-type apparatus expressly taught. For example, *BluetoothSpec* teaches exemplary

Bluetooth-enabled devices including printers. *BluetoothSpec*, 344, 347-348. Additionally, in a scenario where the mobile telephone has not yet paired with a headset or wrist watch-type apparatus, such a modification would have allowed *Chihara's* mobile telephone to establish Bluetooth pairings with said devices in a manner conforming to *BluetoothSpec*. Indeed, a POSITA would have understood such because the inquiry routine messaging is a step performed to establish Bluetooth pairing with devices that are not currently paired with a master device. Such a technique was a known solution to a problem of pairing Bluetooth-enabled devices in the prior art, and making such a modification would have been well within the skillset of a POSITA.

120. Such a modification would have had a reasonable expectation of success because *Chihara* expressly teaches using Bluetooth modules (controlled by processors) for communication links in its devices (e.g., headset, phone, watch), which was well known and understood, as taught in *BluetoothSpec*. Indeed, *Chihara* already teaches using Bluetooth components such as a Bluetooth module, but merely lacks disclosures regarding certain implementation details that *BluetoothSpec* provides. A POSITA would have understood that modifying *Chihara* to utilize standard Bluetooth protocols for its Bluetooth modules (such that the Bluetooth modules would have conformed to the Bluetooth specification *BluetoothSpec*) would have been straightforward, requiring only one of (1) modifying programming

instructions to achieve device compatibility with *BluetoothSpec* or (2) performing a simple substitution of a *BluetoothSpec*-conforming Bluetooth module instead of *Chihara's* native Bluetooth module or (3) performing a simple substitution of a commercially available device that already included a *BluetoothSpec*-conforming Bluetooth module instead of *Chihara's* native device.

121. Modifying programming instructions would have been simple, straightforward, and well within the skillset of a POSITA because *BluetoothSpec* provides all the necessary programming instructions to ensure compatibility with the Bluetooth Specification *BluetoothSpec*.

122. Performing a simple substitution of a *BluetoothSpec*-conforming Bluetooth module would also have been a straightforward option well within the skillset of a POSITA. Swapping out one Bluetooth module for a *BluetoothSpec*-conforming module would have been a straightforward plug-and-play solution that would have yielded predictable results.

123. Bluetooth modules that conformed to *BluetoothSpec* were commercially available, off-the-shelf components that were already included in Bluetooth-enabled devices. Thus, a POSITA would not even have had to personally add/swap Bluetooth modules to devices (although such would have been within the skillset of a POSITA and a POSITA would have had a reasonable expectation of success and would have yielded predictable results when making such a simple

substitution) because such Bluetooth modules were already included in Bluetooth-enabled devices, such as printers, headsets, and watches, and a POSITA would simply have selected a device with a *BluetoothSpec*-conforming Bluetooth module already installed, thereby ensuring a reasonable expectation of success.

124. Therefore, regardless of which option a POSITA would have chosen to perform the modification, modifying *Chihara* in accordance with the well-known Bluetooth specification *BluetoothSpec* would not have required undue experimentation but would have provided *BluetoothSpec's* implementation details and would have been in accordance with standard Bluetooth protocols of *BluetoothSpec*, thus ensuring a reasonable expectation of success.

### D. Claim 1(a)(ii): a scout device associated with said mobile communication device, configured for scanning surroundings of said associated mobile communication device to identify and determine availability of compatible equipment in the vicinity, thereby to reroute data from said mobile communication device to a selected one of said surrounding equipment, wherein said rerouting comprises setting up a bidirectional communication link between said mobile communication device and said selected surrounding equipment, said bidirectional link having a first link direction from said mobile communication device to said selected surrounding equipment and a second link direction from said selected surrounding equipment to said mobile communication device, said bidirectional link carrying streaming data over both directions of said first link direction and said second link direction, and wherein said scout device is operable to determine media type requirements of said compatible equipment;

#### *1. Chihara Teaches a Scout Device and Bidirectional Communication Link*

125. As discussed above, *Chihara* teaches a mobile communication device that reroutes data (e.g., phone call) to one or more selected surrounding equipment (e.g., headset, wrist watch-type information apparatus). *See* Claim 1(Pre)-1(a)(i).

126. *Chihara* teaches mobile telephone 12B establishes bidirectional communication links via Bluetooth with compatible nearby equipment, including headset 13 and wrist watch-type information apparatus 12B. *Chihara*, [0049]-[0051], [0054]-[0057], [0081]-[0084], [0101], *generally* [0105]-[0115], Figs. 7, 13. *Chihara* teaches each of these devices includes a Bluetooth module and processor (e.g., microprocessor, watch CPU) for performing such wireless communication functions. *Chihara*, [0080]-[0083]. Annotated Fig. 9 below depicts said Bluetooth modules of the mobile telephone, headset, and wrist watch-type apparatus (35, 72, 42B, respectively) in green and processors of each (23, 73, 43B, respectively) in pink:

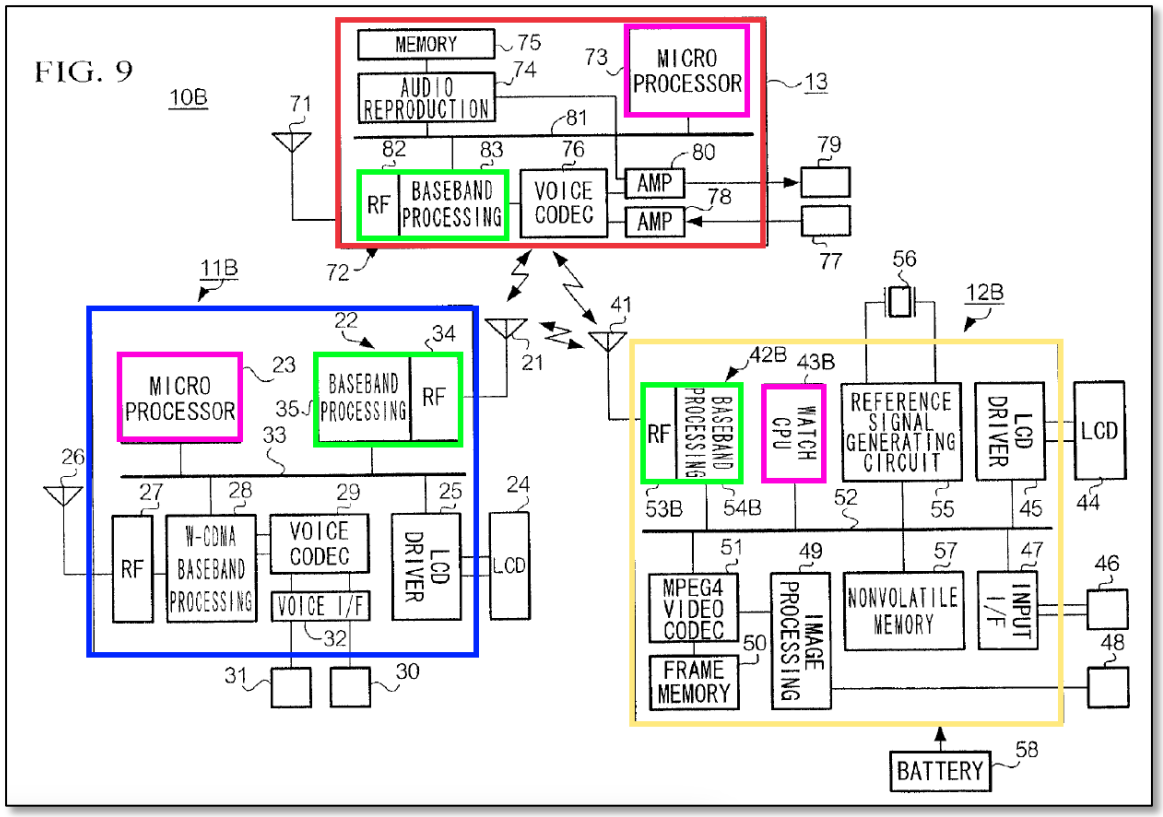


*Chihara*, Fig. 9 (annotated). As explained in 1(a)(i), *Chihara* teaches that the module and processor of each device performs numerous functions related to the announcing functionality to locate and connect with nearby compatible devices. Accordingly, a POSITA would have understood that Bluetooth module 35 in conjunction with microprocessor 23 of mobile telephone device 11B would similarly have been configured to perform scanning as a "scout device." Indeed, Bluetooth modules as controlled by a microprocessor would have performed the functions of their programming instructions. Thus, hardware such as Bluetooth module and a microprocessor would have been fully capable of performing multiple functions.

127. As set forth above with reference to the announcing limitation, although *Chihara* teaches a mobile telephone connecting with surrounding equipment via Bluetooth, *Chihara* does not provide the low-level Bluetooth protocol details implicated when a mobile telephone scans its surroundings to identify and determine availability of compatible equipment in the vicinity. However, *BluetoothSpec* provides these details, as discussed below.

### *2. BluetoothSpec Teaches Scanning Surroundings to Identify and Determine Availability of Compatible Equipment*

128. *BluetoothSpec* teaches such wireless communication details, including using a service discovery protocol (SDP) via a Bluetooth module to scan surroundings and identify and determine availability of compatible equipment in the vicinity.

#### a) Service Discovery Protocol

129. *BluetoothSpec's* Service Discovery Protocol teaches that a "master"/client unit can obtain more detailed information about available services from another Bluetooth unit. *BluetoothSpec*, (Ex. 1005), 331-392. *BluetoothSpec* teaches the "service discovery protocol (SDP) provides a means for applications to discover which services are available and to determine the characteristics of those available services." *BluetoothSpec*, 335 ("SDP shall provide the means for the discovery of new services that become available when devices enter RF proximity with a client device as well as when a new service is made available on a device that

is in RF proximity with the client device."). *BluetoothSpec* teaches that SDP allows for a "client" device to discover both the existence of "server" devices and the particular services such server devices offer. *BluetoothSpec*, 338 ("The service discovery mechanism provides the means for client applications to discover the existence of services provided by server applications as well as the attributes of those services. The attributes of a service include the type or class of service offered and the mechanism or protocol information needed to utilize the service."). A POSITA would have understood that such scanning for information regarding the existence of services of nearby server devices (that is, devices that provide services via SDP) would have identified "compatible" equipment in the vicinity. By performing such scanning and utilizing *BluetoothSpec's* Service Discovery Protocol, nearby Bluetooth-enabled devices with the desired services would have been successfully located.

130. Additionally, the mobile device (e.g., mobile telephone) would have received information regarding services offered, which would have informed the user of the mobile device of the availability of devices compatible with performing a particular service (e.g., rendering audio or displaying video). This is because the server/slave devices would have reported the services they offer to the mobile device/master device to inform a user of what services were available from the

nearby Bluetooth-enabled devices. Devices that were compatible would have been indicated as such.

131. As depicted in Fig. 2.2 below, an SDP client (e.g., *Chihara's* mobile telephone) transmits an SDP request to an SDP server (e.g., *Chihara's* headset or wrist watch-type information apparatus) and receives an SDP response from the SDP server:

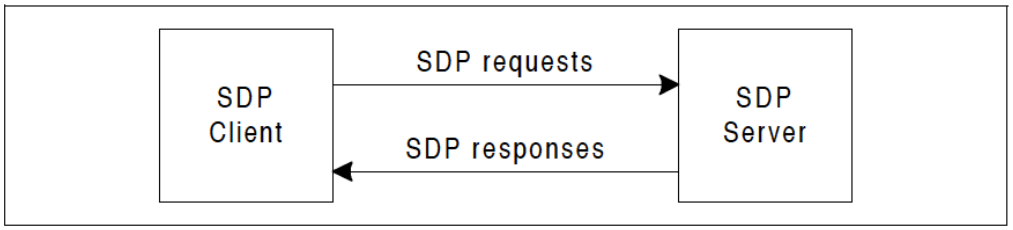


*Figure 2.2:*

*BluetoothSpec*, 338 ("Figure 2.2"). Thus, a POSITA would have understood that such a process of transmitting SDP requests and receiving SDP responses would have served to identify and determine compatible equipment in the vicinity. I note that performing such SDP transmission and reception would have provided the mobile device with information regarding nearby Bluetooth-enabled devices and the services such devices offer, which would have indicated to a mobile device which server devices offer services compatible with the mobile device. Regarding device proximity, a POSITA would have understood that Bluetooth is typically used for short range wireless communication between devices, such that an SDP server transmitting an SDP response would have been nearby ("in the vicinity") of the SDP

client device that sent the SDP request. A POSITA would have understood that Bluetooth was used for short-range communications, so an SDP server that responded would have been understood to be near to the client/master device.

132. Specifically regarding discovering available services, *BluetoothSpec* teaches examples of service classes, such as a printer service class. *BluetoothSpec*, 344, 347-348 (also teaching video game class, movie class, and other service class examples). I discuss examples of such service classes in detail below.

133. *BluetoothSpec* teaches two methods of searching for services. In the first method, a client device searches "for services based on some desired characteristic(s) (represented by a UUID [universally unique identifier]"). *BluetoothSpec*, 345-346. A POSITA would have understood that this search method using a UUID allows a client to use SDP to find a specific offered service. The second method a client device searches for services is by "browsing" for services, which is the "process of looking for any offered services" instead of searching for a specific service using a UUID. *Id.* As an example of using the browsing method, *BluetoothSpec* teaches locating numerous services, including games (Starcraft), movies (A Bug's Life), news, references (dictionary, encyclopedia), as depicted in Fig. 2.6 below:

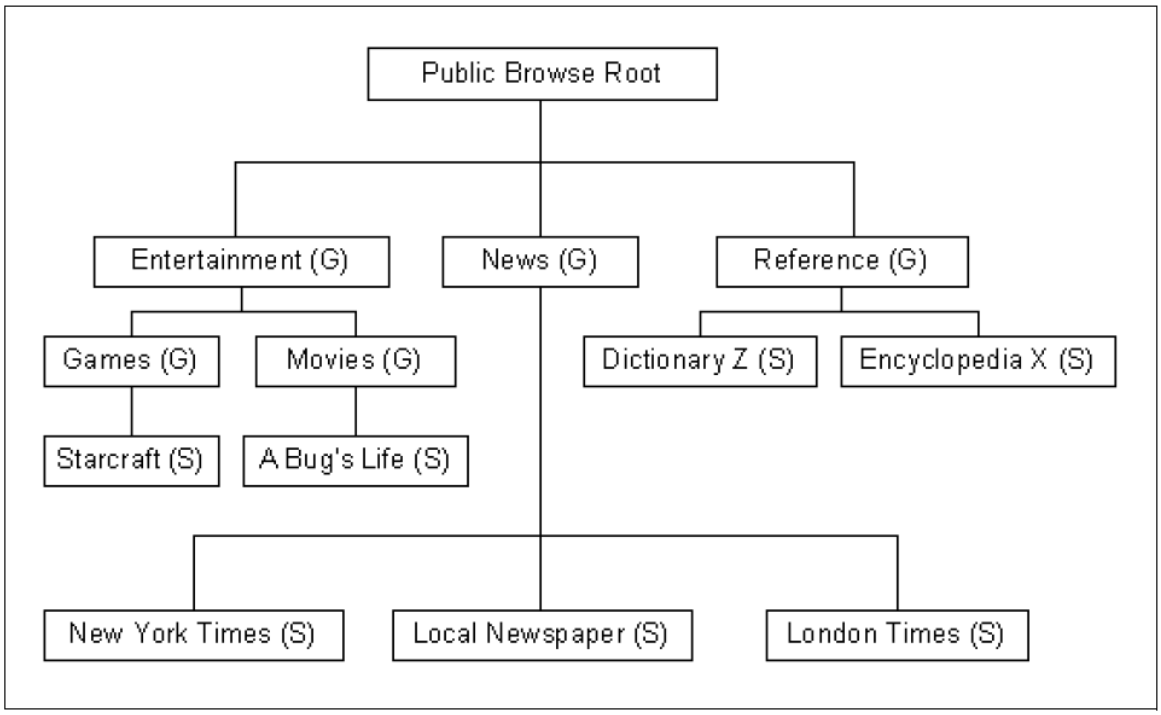


*Figure 2.6:*

*BluetoothSpec*, 347 ("Figure 2.6"). Additionally, *BluetoothSpec* teaches a table with "services records and service attributes necessary to implement the browse hierarchy," including indicating numerous service classes (2nd column):

| Service Name | Service Class | Attribute Name | Attribute Value |
|---|---|---|---|
| Entertainment | BrowseGroupDescriptor | BrowseGroupList | PublicBrowseRoot |
| | | GroupID | EntertainmentID |
| News | BrowsegroupDescriptor | BrowseGroupList | PublicBrowseRoot |
| | | GroupID | NewsID |
| Reference | BrowseGroupDescriptor | BrowseGroupList | PublicBrowseRoot |
| | | GroupID | ReferenceID |
| Games | BrowseGroupDescriptor | BrowseGroupList | EntertainmentID |
| | | GroupID | GamesID |
| Movies | BrowseGroupDescriptor | BrowseGroupList | EntertainmentID |
| | | GroupID | MoviesID |
| Starcraft | Video Game Class ID | BrowseGroupList | GamesID |

*Table 2.1:*

*BluetoothSpec*, 347 ("Table 2.1").

| | | | |
|---|---|---|---|
| A Bug's Life | Movie Class ID | BrowseGroupList | MovieID |
| Dictionary Z | Dictionary Class ID | BrowseGroupList | ReferenceID |
| Encyclopedia X | Encyclopedia Class ID | BrowseGroupList | ReferenceID |
| New York Times | Newspaper ID | BrowseGroupList | NewspaperID |
| London Times | Newspaper ID | BrowseGroupList | NewspaperID |
| Local Newspaper | Newspaper ID | BrowseGroupList | NewspaperID |

*Table 2.1:*

*BluetoothSpec*, 348 ("Table 2.1").

134. Thus, a master device, such as a mobile phone, would have determined available services and protocols necessary to utilize those services by using *BluetoothSpec's* Service Discovery Protocol either by searching for a specific UUID

of a service or by performing "browsing" for all available services, which would have included games, movies, newspapers, dictionaries, encyclopedias, and other audio, video and/or text services.

**b) ServiceAvailability Attribute**

135. Regarding the availability of nearby devices, *BluetoothSpec* teaches a mobile device identifies and determines availability of compatible equipment in the vicinity. For example, *BluetoothSpec* teaches a ServiceAvailability attribute that "represents the relative ability of the service to accept additional clients. A value of 0xFF indicates that the service is not currently in use and is thus fully available, while a value of 0x00 means that the service is not accepting new clients." *BluetoothSpec*, 371. Additionally, the ServiceAvailability attribute can utilize intermediate values for "services that support multiple simultaneous clients" to "indicate the relative availability of the service on a linear scale." *Id.* Thus, a POSITA would have understood that the ServiceAvailability attribute indicates the availability of a nearby compatible device. Indeed, a POSITA would have understood such because the ServiceAvailability attribute provides information on the current availability of a server device, including indicating the server device is currently available. Further, a POSITA would have found it obvious to use a Bluetooth ServiceAvailability attribute to indicate that a nearby compatible device ("surrounding equipment") is available to receive rerouting. Such signaling would

have advantageously informed a client device that a server device was available instead of attempting to connect to a currently unavailable device. Indeed, such ServiceAvailability attributes indicate to a POSITA that a device is "fully available" (or an intermediate value indicating relative availability) or "not accepting new clients" and thus is currently unavailable. Such messaging would have streamlined the Bluetooth pairing process and would have allowed a user to successfully locate an available device (assuming one were available) for the desired service.

136. *BluetoothSpec* also teaches that the ServiceAvailability attribute "should be treated as a hint or an approximation of an availability status" rather than a "guarantee that the service will be available for use." *BluetoothSpec*, 371. However, a POSITA would have understood that the ServiceAvailability attribute is a way to identify and determine the current availability of "compatible" equipment in the vicinity, even if such an indication is not an absolute "guarantee" that a particular service will be available when the client requests said service. A POSITA would have understood that such an availability attribute may not have been absolutely guaranteed because another user might begin utilizing the services of a particular server before a first user does such. A POSITA would have understood that while a ServiceAvailability attribute is not a guarantee for the future and is simply an indication of the current availability status of a device, a POSITA would have understood that such would still have indicated the current availability at a

given point in time. Further, a POSITA would have understood that an indication of availability, while not a guarantee, would have been an improvement over not having any indication as to whether a particular a device is currently available.

### *3. Chihara Teaches Bidirectional Communication Link*

137. A POSITA would have understood that *Chihara* describes bidirectional communication links that align with those in the ’990 Patent. As I opine below, *Chihara* and the ’990 Patent both describe two-way phone call audio. For example, the ’990 Patent describes “in the case of a cellular telephone, the telephone communication is a bi-directional type of communication, and any rerouting should preferably support a return path for the communication.” *’990 Patent*, 5:58-61, 10:55-12:2 (describing Scenarios 1 and 2 where a phone call is routed to a land/fixed line phone, and Scenario 4 where an incoming phone call arrives at a land (fixed) line phone and is cloned to a cell phone).

138. *Chihara* similarly teaches rerouting data from a device that originally receives the data to at least one other nearby selected device. *See* Claim 1(Pre)-1(a)(i). For example, *Chihara* teaches routing a phone call received at a mobile telephone to a selected headset and to a selected wrist watch-type information apparatus. *Chihara*, [0013], [0016], *generally* [0106]-[0118]. *Chihara* teaches such rerouting involves a bidirectional communication link (e.g., Bluetooth) because, for example, a user of the headset can talk to the calling party using a microphone in the

headset. *Chihara*, [0140] ("Each of the embodiments described above employs the bluetooth communication as a local bi-directional radio communication[.]").

139. Specifically, *Chihara* teaches a first bidirectional communication link between the mobile telephone and wrist watch-type apparatus ("wearable radio communication device"). *Chihara*, [0022] ("[T]he mobile telephone device can establish a first communication link for effecting local bi-directional radio communication with the wearable radio communication device"). *Chihara* also teaches a second bidirectional communication link between the mobile telephone and a headset, which may be used to speak to a calling party. *Id.* ("[A]nd a second communication link for effective local bi-directional radio communication with the headset having a voice input/output unit, and also can effect the bi-directional local radio communication including the voice data communication through the second communication link."). Indeed, *Chihara* provides numerous teachings of bidirectional communication links (including streaming such as audio of a phone call and video) between such devices. *Chihara*, *generally* [0007]-[0010], [0014]-[0015], [0017], [0022], [0029], [0049]-[0050], [0078]-[0080], [0083]-[0084], [0109]-[0110], [0114]. Annotated Fig. 7 below depicts such bidirectional Bluetooth communication links (red):

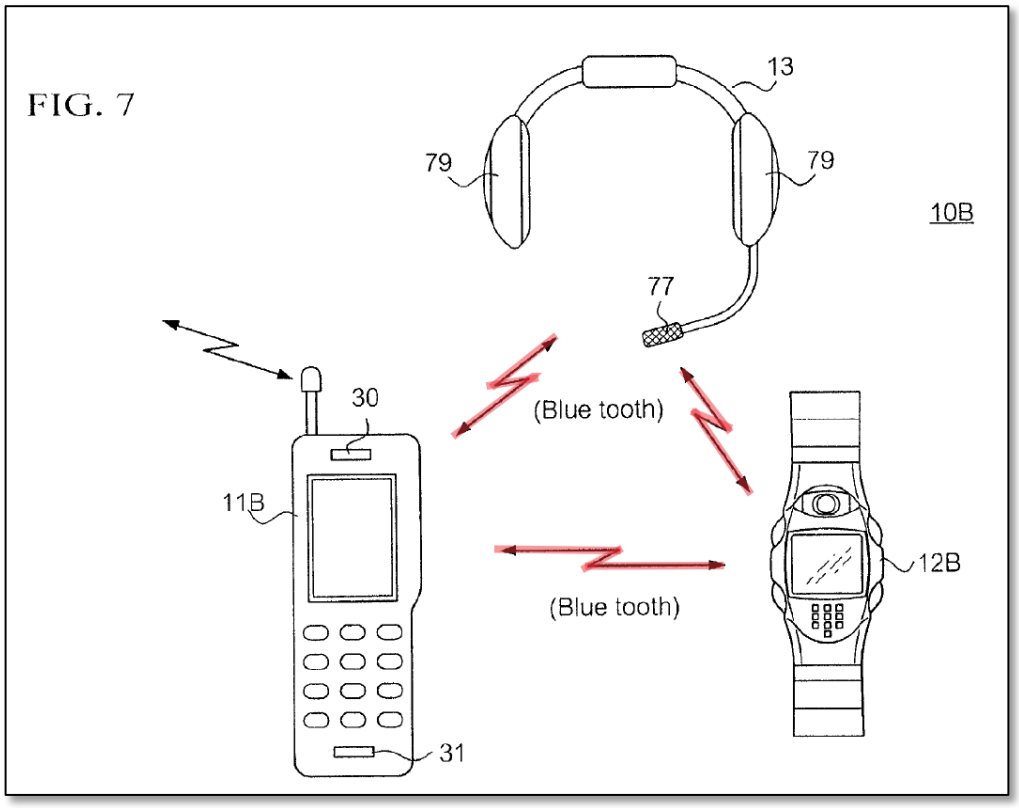


*Chihara*, Fig. 7 (annotated). A POSITA would have understood that *Chihara's* bidirectional communication would thus have both a first link direction from the mobile telephone to the surrounding equipment and a second link direction from the surrounding equipment to the mobile telephone. Indeed, incoming phone call audio and outgoing spoken audio sent back to the calling party would have been bidirectional and is the same as the example described in the '990 Patent. Further, a POSITA would have understood that *Chihara* teaches bidirectional communication because the Bluetooth connections are bidirectional, as indicated in Fig. 7 above.

140. Similarly, *Chihara* teaches a mobile phone receiving a call and rerouting the call to a selected headset that includes a microphone for a user to speak

to the calling party. *Chihara*, [0080]. A POSITA would have understood that such a phone call using a bidirectional link between the mobile telephone and surrounding equipment would have been a bidirectional link carrying streaming data over both the "first link" direction (to the surrounding equipment) and "second link" direction (from the surrounding equipment to the mobile telephone). A POSITA would have understood that incoming call audio and outgoing call audio would have been two different link directions. Indeed, such bidirectional phone call audio to and from a calling party is the same as the examples described in the '990 Patent, as I discussed above. *'990 Patent*, 5:41-61, 10:55-12:2. An annotated excerpt of *Chihara's* Fig. 7 below depicts headset 13 including microphone 77 (green) for bidirectional communication with a calling party, for example:

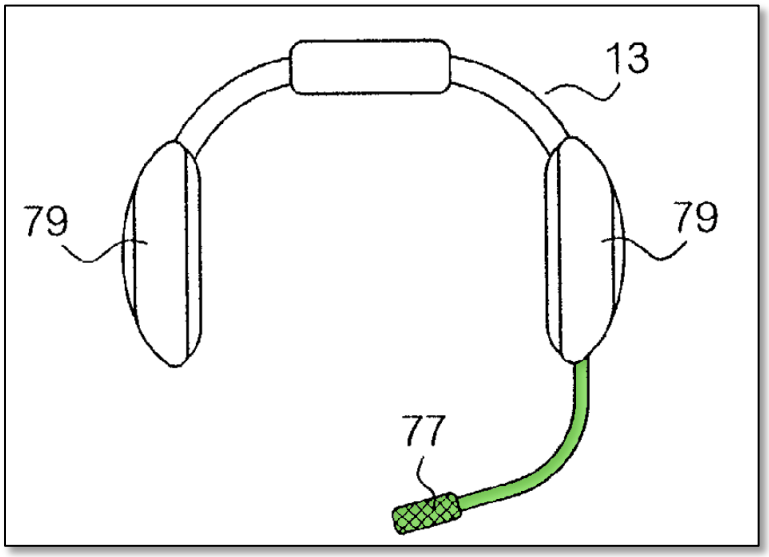

*Chihara*, Fig. 7 (excerpt, annotated). A POSITA would have understood that a user would have used microphone 77 to speak to transmit phone call audio to the calling party, for example.

### *4. Chihara Teaches Media Type Requirements*

141. *Chihara* teaches a mobile telephone including a Bluetooth module and microprocessor for communicating with nearby Bluetooth-enabled devices, such as a headset and wrist watch-type apparatus. *See* Claim 1(Pre), 1(a)(i). Additionally, *Chihara* as implemented pursuant to *BluetoothSpec* teaches scanning surroundings of the mobile telephone to identify and determine availability of compatible equipment in the vicinity. I note that *BluetoothSpec* teaches a Service Discovery Protocol and ServiceAvailability attribute for performing such functions, as I discussed above. A POSITA would have understood that such a service discovery protocol performed by *Chihara-BluetoothSpec's* mobile telephone including a Bluetooth module and processor would have determined media type requirements of nearby Bluetooth-enabled devices. Indeed, using such a discovery process would have caused a mobile device to receive information regarding the services a client/slave device offers. Such information would have informed a user of the media type requirements of a particular server/slave device, such as whether the device can handle audio, video, images, or other media. For example, such a discovery protocol would have determined available services of said Bluetooth-enabled devices (e.g.,

input and/or output of text, video, and/or images), as discussed above at Section IX.D.2.a.

142. A POSITA would have understood that determining available services and device attributes would have indicated media type requirements, such as whether a device can display video or images, render audio, or receive audio input from a microphone, for example. Indeed, as an example, a server device indicating it is available to receive and render streaming audio as a service would have indicated that the server device would have been compatible with audio. Thus, a POSITA would have understood that *Chihara-BluetoothSpec* would have determined media type requirements of said devices ("*determined media type requirements of said compatible equipment*") by utilizing the Service Discovery Protocol.

### *5. Motivation to Combine Chihara and BluetoothSpec*

143. As discussed above with reference to the announcing limitation, a POSITA would have been motivated to implement *Chihara* according to *BluetoothSpec's* teachings, relying on the Bluetooth standard implementation details to perform functionalities for which *Chihara* expressly identifies Bluetooth as a preferred embodiment. Specifically, a POSITA would have been motivated to modify *Chihara* per *BluetoothSpec's* teachings to utilize the Bluetooth Service Discovery Protocol (SDP) and ServiceAvailability attribute because both aspects of *BluetoothSpec* would have advantageously improved *Chihara's* mobile device

functionality by providing an indication that a service is currently available and indicating what media type capabilities the server would have had. Such a modification would have been use of known techniques for Bluetooth (per *BluetoothSpec*) and would have improved *Chihara's* Bluetooth communications between devices (e.g., mobile telephone, headset, wrist watch-type apparatus) in the same way as *BluetoothSpec's* wireless communications via Bluetooth. I noted numerous advantageous for such a modification above. *See* Claim 1(a)(i). Implementing *Chihara* per *BluetoothSpec's* teachings would have ensured interoperability between Bluetooth-enabled devices from various manufacturers by adhering to protocols from the official Bluetooth specification. Indeed, *BluetoothSpec* is an official Bluetooth specification, and devices that adhere to it would have been understood to be compatible with each other. Similarly, said modification would have improved *Chihara* by expressly enabling *Chihara*'s mobile device to determine the plurality of media type requirements in surrounding compatible media handling devices, thereby providing *Chihara*'s mobile device with greater specificity in determining which compatible devices to route data to for the display/reproduction of a specific media type. Such a modification would have advantageously provided a user with more information to select a device to perform the desired service. *See* Claim 1(a)(i).

144. Such a modification would have had a reasonable expectation of success. Indeed, such a modification would have been pursuant to Bluetooth protocols from the Bluetooth Specification, such that *Chihara* would have merely been modified to utilize established and well-known Bluetooth protocols for its Bluetooth communications. I opined above regarding advantages and why a POSITA would have had a reasonable expectation of success when modifying *Chihara* per *BluetoothSpec*, and I incorporate all those opinions herein as well. *See* Claim 1(a)(i) (Section IX.C.3).

### E. Claim 1(a)(iii): a media transformer, associated with said scout device, for transforming media into a form that accords with said determined media type requirements, wherein a plurality of types correspond to said media type requirements, and further comprising a user interface for allowing a user to select one of said media type requirements for transforming at said media transformer and

#### *1. Chihara-Everett's Media Transformer*

##### a) '990 Patent's Media Transformer Descriptions

145. As discussed in Section III.D, I was instructed to apply a construction of "media transformer" that is construed to capture a commercially available voice-to-text converter software module. Indeed, the '990 Patent describes a "preferred embodiment of a media transformer includes a voice to text transformer[.]" *'990 Patent*, 6:32-39. The '990 Patent further recommends using "well known and commercially available" software for such voice to text transformation. *'990 Patent*,

5:55-57, 4:52-58. Additionally, the '990 Patent describes such transformation would aid a person with a hearing impairment. *'990 Patent*, 4:64-5:3.

**b) Chihara's Media Transformer Teachings – Text-to-Speech**

146. As discussed above, *Chihara* teaches a mobile communication device. *See* Claim 1(Pre)-1(a)(i).

147. In one embodiment *Chihara* teaches transforming received text data (e.g., from an email) to speech. *Chihara*, [0137] ("[T]he mobile telephone device may be provided with a voice synthesis circuit for converting the text data in the received electric mail to the voice data so that the voice data obtained from the voice synthesis circuit may be transferred to the headset. This modification make[s] it possible for the user to hear the contents of the electric mail by way of the headset."). *Chihara* does not expressly describe the reverse scenario of transforming phone call audio to text. However, such functionality was well known in the art, with *Everett* teaching such a speech to text transformation using software on a mobile device. For the reasons set forth below, a POSITA would have been motivated to modify *Chihara* per *Everett's* teachings to include speech-to-text functionality (e.g., software executed by a processor) in the mobile phone to transmit translated speech to a surrounding device such as *Chihara's* wrist watch-type apparatus. Indeed, as I opine below, such a modification would have been advantageous and would have had a reasonable expectation of success. Such functionality relies on the precise

hardware and wireless connection arrangement expressly described by *Chihara.* Namely, *Chihara* already teaches an embodiment in which phone call data (e.g., in the form of caller video) is communicated to its wireless wrist watch apparatus while simultaneously allowing the user to speak and listen via the wireless headset. *Id*., [0078]. The proposed modification simply repurposes this wireless wrist watch connection to communicate voice-to-text data to the watch display and provides the well-understood benefit of assisting the hearing impaired to participate in voice calls. A POSITA would have found such advantageous to assist a hearing impaired user by transforming phone call audio to text for a user to read on the wrist watch while also receiving the phone call audio via the headset (for a user to hear non-spoken verbal cues such as tone and volume, for example) and allowing a user to speak to the calling party via the headset's microphone. Further, such a "*media transformer*" would have been "*associated with said scout device*" because the processor executing speech-to-text software also performs functions related to the mapped "*scout device*." *See* Claim 1(a)(ii) for the "*scout device*" mapping.

**c) Everett's Media Transformer Teachings – Mobile Phone with Speech-to-Text Transformation Capability**

148. *Everett* teaches a mobile device that translates speech of an incoming phone call into text, for example, to aid a hearing impaired user. Specifically, *Everett* teaches "a portable electronic communication device embodied as a cellular telephone 10 which has text-to-speech and speech-to-text translation capabilities so

that it can be used by a hearing-impaired user." *Everett*, 2:19-23. *Everett* teaches cellular telephone 10 includes an "electronic organizer 22" that "can interface with some or all of the other components of the cellular telephone 10." *Everett*, 2:35-38. Electronic organizer 22 "has storage for one or more programs and interacts with the various components of the cellular telephone 10." *Everett*, 2:44-48.

149. Further, *Everett* teaches the "electronic organizer 22 may include the speech recognition translator program module 34 resident and selectively executable thereupon, and when called, the program module 34 translates speech from either the communicating party or the user of the telephone into a data stream of text comprised of text words ideally for each spoken word." *Everett*, 2:66-3:5, 3:21-31, 3:32-52 (including teaching commercially available speech recognition translator programs), Fig. 3 (depicting a flowchart of translating speech to text). *Everett's* cellular telephone 10 is depicted below in Fig. 1:

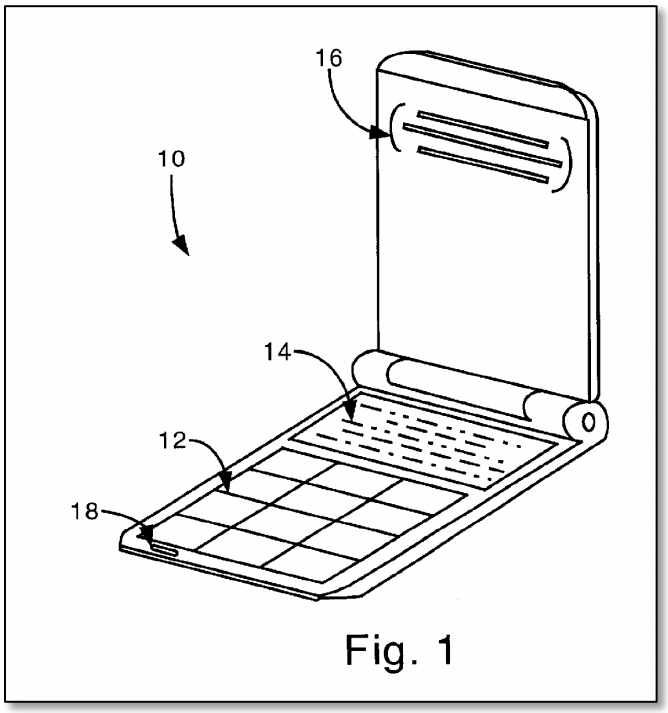


*Everett*, Fig. 1. Additionally, *Everett's* Fig. 2 below depicts components of cellular telephone 10, including electronic organizer 22 and speech-to-text translator 34:

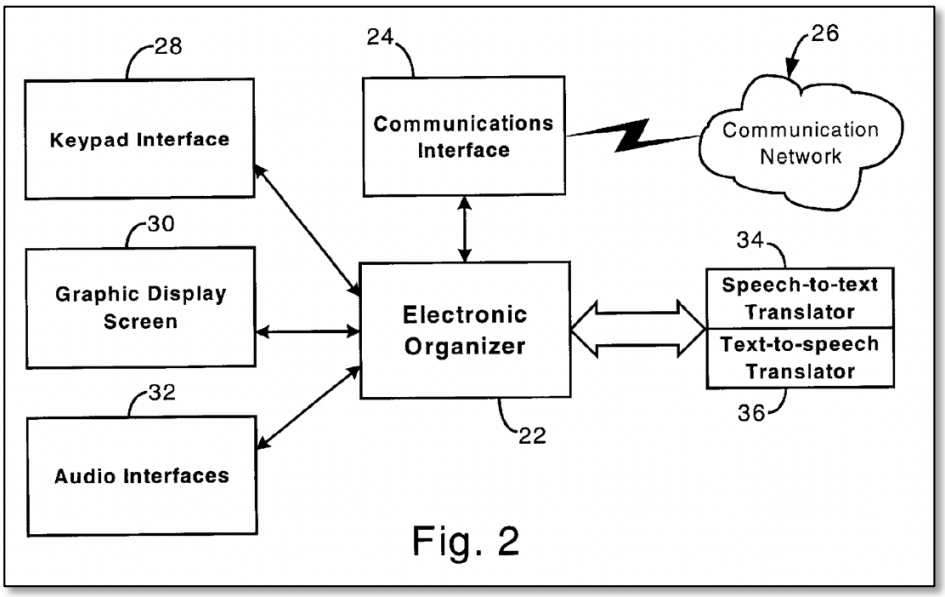


*Everett*, Fig. 2.

### *2. Motivation to Combine Chihara with Everett*

150. A POSITA would have been motivated to modify *Chihara* to capture *Everett's* advantages including, for example, allowing a hearing impaired user to "enjoy the benefits of readily portable telecommunications devices," per *Everett's* teachings. *Everett*, 1:47-56. Indeed, modifying *Chihara* per *Everett's* teachings would have allowed a user with hearing impairment to read phone call audio while also receiving phone call audio in *Chihara's* headset. Such a use of a known technique of using a processor to execute speech-to-text translation software on a mobile device (e.g., cellular phone) would have advantageously improved *Chihara's* mobile telephone in the same way as *Everett's* cellular telephone. I note that both *Chihara* and *Everett* teach mobile phones, such that a POSITA would have expected *Everett's* advantages to apply to *Chihara* and also a POSITA would have had a reasonable expectation of success when modifying *Chihara's* mobile phone to include *Everett's* speech-to-text functionality. Further, in the combination, *Chihara's* watch device would not require additional processing power, as it would only need to display text, which *Chihara* already teaches the watch is capable of displaying.

151. The modified *Chihara* would have performed such speech-to-text translation at the mobile telephone (in the same way as *Everett*) but would have further transmitted the translated text to the wrist watch-type apparatus for a user to

read said text. A POSITA would have understood that such a modification would have allowed a user to utilize *Chihara's* watch in the same manner in which *Chihara* teaches using the watch during a phone call, but with the added functionality of reading speech-to-text translated speech. Indeed, *Chihara* already teaches transmitting images and text to the wrist watch-type information apparatus during a phone call (and while simultaneously communicating bidirectional audio with the wireless headset), such that modifying *Chihara* to further transmit phone call audio translated to text is consistent with *Chihara's* express teachings and would have had a reasonable expectation of success. A POSITA would have understood that such a modification would have been advantageous to assist hearing impaired individuals or other individuals by allowing said users to read phone call audio translated to text on the watch. Such a modification would have improved *Chihara's* mobile telephone for non-hearing impaired users as well, for example, by providing text on *Chihara's* wrist watch-type apparatus for a user to read in a noisy environment or other environment where hearing the audio of a phone call is difficult. Indeed, a non-hearing impaired individual also would have benefited in situations where a user needs to hear audio but not necessarily respond, for example, while in a store, at an office, on a job site, or other location where there may be noise impacting a user's ability to hear phone call audio and where a user may not want or need to talk back to the calling party but would benefit from reading the translated text on the watch.

In another example, being able to see text in addition to hearing the phone call audio may help an individual who is better at remembering information visually, such as by seeing an address written in text instead of only hearing the address.

152. Further, a POSITA would have been motivated to maintain *Chihara's* teachings of transmitting audio to the Bluetooth-enabled headset even for a hearing impaired individual. Indeed, it was well understood that hearing loss/impairment may have varying levels of severity due to age, trauma, or other factors, such that a user with some hearing impairment (but not totally deaf) would still be able to advantageously hear some portions of the call or perhaps understand non-verbal spoken cues (e.g., inflection, volume, pauses, etc.). I note that such was well known in the prior art, including as taught by *Engelke. Engelke* teaches the advantages of maintaining phone call audio for hearing impaired users, such as allowing a user to hear non-verbal spoken cues such as "inflection, volume, pauses, or the like" and to maintain their usual habits of listening to a call (including non-verbal spoken cues) instead of receiving only the speech-to-text translation. *Engelke*, 3:33-47, *see also* 14:37-63.

153. A POSITA would have understood that modifying *Chihara* per *Everett's* teachings would have had a reasonable expectation of success. Indeed, *Chihara* and *Everett* teach mobile phones, and *Chihara* already teaches similar text-to-speech translation for a received email, as I opined above. Modifying *Chihara* to

utilize well-known and commercially available speech-to-text software in a mobile device per *Everett's* teachings thus would have been a solution to a known problem and would have been well within the skillset of a POSITA. Indeed, a POSITA would have been able to perform such a modification by installing commercially available speech-to-text software in a mobile device or having such installed thereon. For example, a POSITA would have either personally performed such an installation or would have utilized a software installation service for performing such a modification. In either case, a POSITA would have had a reasonable expectation of success because *Everett* teaches a similar mobile device to *Chihara*, and *Everett* teaches such software (including "Dragon" and "Via Voice") was commercially available. *Everett*, 1:41-46, 3:47-52. Alternatively, a POSITA would have had a reasonable expectation of success when using a mobile device that already includes commercially available speech-to-text software pre-installed, such that a POSITA would not have had to personally install any software or otherwise personally modify the mobile device, but would have simply selected an available off-the-shelf device that utilizes commercially available speech-to-text software, per *Everett's* teachings.

154. Additionally, a POSITA would have had a reasonable expectation of success because *Everett* teaches a mobile phone that stores speech-to-text transformation software in memory. A POSITA would have understood that

*Chihara's* similar mobile phone would also have had sufficient memory to store such software and to store digital copies of phone call audio.

### *3. Chihara's Plurality of Media Type Requirements*

155. *Chihara* teaches "slave" devices that include particular input/output functionalities, such as headset 13 for outputting phone call audio and receiving user voice input via microphone 77. *Chihara*, [0001], [0006], [0009], [0049], [0078]-[0083], Figs. 7, 9. Additionally, watch 12B includes capabilities such as outputting images, text, and video (for example, in a videocall mode). *Chihara*, [0078], [0114]-[0117], [0132], [0055], Fig. 8. A POSITA would have understood that a user of mobile phone 11B would have taken capabilities of "slave" devices into consideration when selecting devices with which to pair to form a Bluetooth pico-net. Indeed, mobile phone 11B would have taken into consideration that a device without a screen, such as a headset, would not have been capable of displaying text, for example. Specifically, certain devices would have had particular capabilities for outputting media types (e.g., text, audio, and/or video) or inputting media types (e.g., capturing images, audio, and/or video). *Chihara*, [0006]-[0009], [0049], [0055], [0078]-[0083], Figs. 7-9. As an example, the headset would have been capable of outputting audio via a speaker but did not include a screen to display images or text, and the watch would have been capable of displaying images and text, but the watch did not include a speaker to output audio.

156. In the proposed combination, *Chihara's* wrist watch display is repurposed to provide a text-based read out of the phone call audio, transformed from speech pursuant to *Everett*. Claim 1(a)(iii) requires a user interface that permits the user to select a media type for transformation. In the proposed combination, the media type is text. To satisfy this limitation, the user simply needs the option to indicate that they desire a text display of the phone call audio. This is precisely consistent with at least one embodiment described in the '990 Patent in which phone call audio is cloned and one cloned copy is converted to text and displayed for a hearing impaired participant. *See '990 Patent*, 11:53-12:2. As set forth in detail below, a POSITA would have understood and found obvious that the proposed combination would have provided the user such an option to select a text-based output of the phone call audio.

157. As discussed above, *BluetoothSpec* teaches details regarding Service Discovery Protocol for determining such capabilities of devices. *See* Claim 1(a)(ii). Thus, a POSITA would have understood that a user of mobile phone 11B would have received information regarding the media capabilities of potential slave devices with which to pair through *BluetoothSpec's* Service Discovery Protocol before making a pairing selection and forming a pico-net. *See* Claim 1(a)(i)-1(a)(ii). In this way, a user would have selected particular media type requirements (e.g., choosing to output text such as from speech-to-text per *Everett's* teachings or choosing to

output phone call audio and receive microphone input from headset 13 and microphone77) using the modified *Chihara's* mobile phone 11B. Indeed, such selections would have been in accordance with the information provided from the Service Discovery Protocol.

158. Further, a POSITA would have understood that such selections would have been made using the modified *Chihara's* user interface, as discussed in detail below at Section IX.E.4. As I opine below, *Chihara* teaches a mobile phone with an LCD screen and buttons for user input. Alternatively, a POSITA would have understood that such selections would have been made using the modified *Chihara's* user interface in view of *Chang's* teachings, discussed at Section IX.E.5-6 below.

#### *4. Chihara's User Interface for Selecting a Media Type Requirement*

159. *Chihara* depicts mobile telephone 11B includes user input controls such as buttons (orange) and an LCD display 24 (pink) (collectively a "user interface" along with any necessary instructions executed by microprocessor 23).

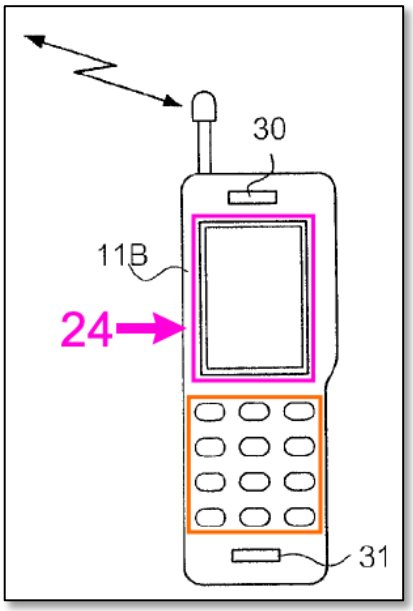


*Chihara*, Fig. 7 (excerpt, annotated).

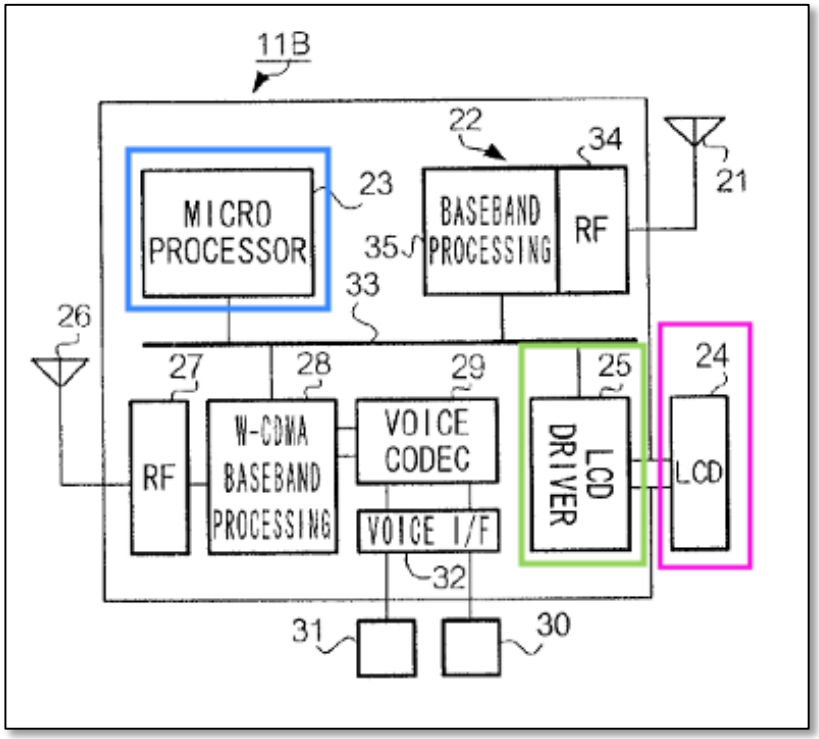

*Chihara*, Fig. 9 (excerpt, annotated), [0050] (teaching LCD driver 25 (annotated green) for driving LCD 24 (annotated pink) under control of microprocessor 23 (annotated blue)), [0072], [0130].

160. Additionally, *Chihara* teaches forming a pico-net between a "master" device (e.g., mobile phone) and multiple "slave" devices (e.g., headset, watch apparatus) a time. *Chihara*, [0101], [0105]. Specifically, *Chihara* teaches "determining" mobile telephone device 11B "as a master and the wrist watch-type information apparatus 12[B] and the headset 13 as slaves to configure the pico-net shown in FIG. 13." *Chihara*, [0101] (corrected). *Chihara* also notes that processes occur after the pico-net has been formed: "Once the pico-net is formed, the operation mode of the mobile telephone device 11B" is active. *Id.* A POSITA would have understood that in *Chihara's* scenario of mobile telephone device 11B as master of the Bluetooth pico-net, a user would have used LCD 24 and input buttons of mobile telephone 11B to select headset 13 and wrist watch-type information apparatus 12B as slave devices out of any nearby available Bluetooth-enabled devices. A POSITA would have understood that pairing with devices would have required some input to select particular devices with which to pair out of all of the available nearby devices, for example. Indeed, a POSITA would have understood that such Bluetooth pairing would not have occurred automatically but instead would have utilized user input to select particular devices with which to pair, for example, before utilizing such

"slave" devices for bidirectional phone call audio and receiving images, text (e.g., *Everett's* speech-to-text output), or video. Indeed, a POSITA would have understood that a user would have needed to select the devices with which to pair by using a user interface such as buttons and reading information on the display, and that such selection would have been done with the slave device capabilities in mind. A POSITA would have understood that a user thus would have selected the wireless headset and watch apparatus before a call is received and that the slave devices would have entered a low power "park" mode to await an incoming call, for example. Thus, a POSITA would have understood that the watch apparatus was manually selected based on its ability to service the user's desired text read out of phone call audio.

161. To summarize, a POSITA would have understood that *Chihara-BluetoothSpec* teaches setting up connections, which includes using SDP to determine available services to use from the headset and watch and to select services to utilize. After such an initial setup, *Chihara* teaches placing the devices in park mode, where the devices wait until a call comes in, for example. *Everett* teaches the speech-to-text software is activated automatically when a call comes in. *See* Section IX.E.1. In the *Chihara* combination, the user would have indicated at the mobile device for the watch to use the speech-to-text mode instead of the videophone mode during the initial setup before the call comes in. Should the user wish to change the

mode to utilize a different service, the user can do so, such as by using a user interface, as discussed below. *See* also *Chang's* teachings at Section IX.E.5.

162. A POSITA would have understood that *Chihara's* LCD 24 and input buttons would have allowed a user to select one of a plurality of media type requirements for transforming at the media transformer. Indeed, devices such as wrist watch-type information apparatus 12B were capable of displaying text, images, and video (e.g., video call mode). *Chihara*, [0078]-[0079], [0114]-[0117], [0132], [0049], [0055], Fig. 8. When combining *Chihara* with *Everett's* teachings of performing speech-to-text transformation at the mobile phone and transmitting the outputted text to the wrist-watch information apparatus, a POSITA would have understood that a user would have selected such a text output mode (so the wrist watch receives text) using the mobile phone. Indeed, a POSITA would have understood that for devices with numerous capabilities, a user would have selected a particular function to utilize, such as outputting text. Such a selection would have been use of a known technique of choosing a preference for the watch apparatus to function in a text output mode to assist a hearing impaired user (or other user) instead of being used in a video call mode, for example.

163. A POSITA would have understood that choosing such an output mode for transformation out of a plurality of available output modes would have been performed at the mobile device rather than the watch because the mobile phone

(master device) would have been used to configure the pico-net, and the watch functionality for text output would have been selected when configuring and forming the pico-net. Indeed, the master device would have set up the pico-net, and a user would thus have utilized the mobile device to make selections pertaining to the pico-net, such as selecting devices with which to pair and selecting the services to utilize at said devices. A POSITA would have understood that selecting the watch's operating mode for a pico-net at the mobile device would not have fundamentally altered the functionality of *Chihara's* watch 12B (e.g., would not have permanently disabled video calling mode), but would have been merely selecting one operating mode out of several available operating modes for the mobile telephone to transform speech into text and output said text to watch 12B to assist a user with hearing impairment or other non-impaired users for a particular length of time (e.g., the duration of a phone call, or until a user decides to select a different operating mode). Thus, *Chihara's* watch 12B would have maintained its full range of capabilities but a user would have had a choice of which mode to utilize at a given time. Indeed, a POSITA would have made a selection of which mode to utilize, which would not have impacted the device's capabilities, but would have merely been selecting one operating mode over another for a given time.

#### 5. *Chang's User Interface for Selecting a Media Type Requirement*

164. To the extent Patent Owner argues *Chihara* does not render obvious a user interface for selecting a media type requirement, a POSITA would have been motivated implement *Chihara* pursuant to user interface teachings in the art, such as those described by *Chang*. *Chang* teaches a similar mobile phone device to *Chihara* and *Everett.* For example, *Chang* teaches an information apparatus 100, which may be a "mobile computing device such as palmtop computer, handheld device, laptop computer, personal digital assistant (PDA), smart phone, screen phone …" *Chang*, [0073], [0078], [0002].

165. *Chang* teaches such information apparatus also includes an "interface" "for interactions with users," where such user interface includes "a keyboard, a touch-sensitive or non-touch sensitive screen, push buttons, soft keys, a stylus[.]" *Chang*, [0074], *id.* ("The interface may be implemented in software or hardware or a combination."). In one example, *Chang* teaches an information apparatus includes a graphical user interface (GUI) that a user can interact with directly via touch or via another user interface (e.g., push buttons) to make selections and perform various tasks. *Chang*, [0046], [0050] (specifying user preferences via a GUI), [0089]-[0090] (obtaining selections "by user input through a GUI"), [0203], [0222], [0259]-[0261] (including teaching regarding Figs. 9A-9F, which depict GUIs for users to make selections), [0265]-[0267] (including teaching moving a cursor on a GUI and selecting a "select" command), Figs. 9A-9F.

166. I note Figs. 9A-9F depict various options on a GUI, from which a user may make selections of various options. A POSITA would have understood that a user would have utilized user inputs such as taught by, including using buttons or a GUI touch screen, etc., to make selections. *Chang* teaches such selections using a GUI include specifying an output device (e.g., audio device, video display) and specifying a particular job for said output device. *Chang*, [0050]-[0060], [0095]-[0096] (teaching numerous examples of output devices 106 including teaching "[a]ny device capable of playing or reading digital content in audio (e.g., music) or data (e.g., text or document) formats is also a possible output device 106."). A POSITA would have understood that selecting one or more output devices based on their capabilities would have been making one or more selections based on predetermined media type requirements of those devices.

167. In one example, *Chang* teaches using a printer as an output device. A user performs a search discovery process to find compatible and available output devices (e.g., printers) including printers that can perform a particular task (e.g., color printing). A user uses a user interface (e.g., GUI with touch screen, stylus, buttons) of information apparatus 100 to make selections of which device to use as an output device 106 and to specify the particular functions the output device will perform. *Chang*, [0259]-[0266], [0074], Figs. 9A-9F. For example, Fig. 9B below depicts the results of an output device search, where three printers (Ultra laser 9, PH

Inkjet 260, and Tekmark color) were discovered and a user can select one of said printers to use as an output device.

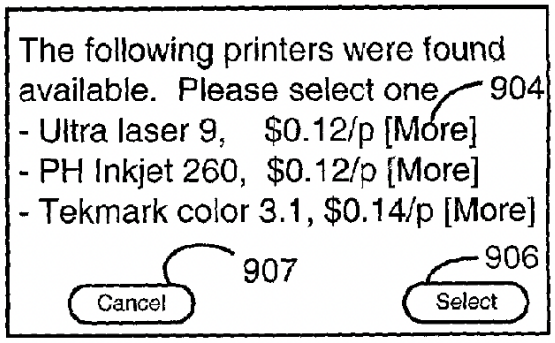


Fig. 9 B

*Chang*, Fig. 9B. Further, *Chang* teaches utilizing the user interface for a user to select options for the output task, as depicted in Fig. 9D below:

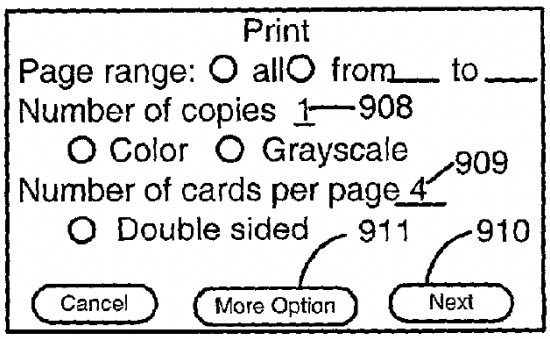


Fig. 9 D

*Chang*, Fig. 9D.

168. While *Chang* teaches an example using a printer as an output device, *Chang* expressly teaches using other output devices including display screens, monitors, televisions, and voice output devices. *Chang*, [0191]-[0192], [0095]-[0096]. A POSITA would have understood that output devices other than printers would have been used in the same manner, including because *Chang* teaches numerous examples of output devices, including audio and video output devices. A POSITA would have understood that *Chang* would have used a user interface in a similar manner for other such output devices. Indeed, a POSITA would have understood that a user interface would have been used to make selections regardless of which output device(s) are ultimate selected for use.

#### ***6. Motivation to Combine Chihara, BluetoothSpec, Everett, and Chang***

169. A POSITA would have been motivated to modify *Chihara-BluetoothSpec-Everett* per *Chang's* teachings to provide a mobile device with a user interface (e.g., one or more of a GUI, push buttons, stylus, or other user input as discussed above) for a user to select a media type requirement from a plurality of media type requirements for a transformation at a media transformer of a mobile device. A POSITA would have understood that such a modification would have advantageously provided a user with a user interface to easily perform a selection of media type requirements for one or more server devices. Such a modification would have applied *Chang's* known user interface teachings, allowing *Chihara's* user to

select which device(s) is used for a given phone call, for example. Indeed, such a modification would have allowed a user to select a particular media type requirement out of a plurality of media type requirements for a transformation (e.g., speech-to-text per *Everett's* teachings) using a user interface of *Chihara's* mobile device. A POSITA would have understood that such would have been use of a known technique of using a user interface for a user to make selections and would have improved *Chihara-BluetoothSpec-Everett* in the same way as *Chang*.

170. While *Chihara* already depicts buttons and an LCD screen on a mobile device, *Chihara* does not provide an express teaching of a user pressing said buttons or using a touch screen as a user interface. Accordingly, a POSITA would have understood that *Chang* merely provides implementation details for how *Chihara's* user interface would be implemented. Modifying *Chihara* (as modified by *BluetoothSpec* and *Everett*) would have advantageously provided a user with a variety of options for making selections at a mobile device, including using a touch screen display or non-touch screen display and making a selection via buttons, for example. Indeed, *Chang* teaches numerous examples of user interfaces for making selections, and a POSITA would have understood that any of such user interfaces (e.g., touch screen, buttons) would have been use of a known technique that would have allowed a user to make selections on the modified *Chihara's* mobile device in the same way as *Chang's* mobile device. Utilizing a GUI for the mobile device

(whether with a touch screen or not) would have been use of known technique that would have advantageously provided a straightforward, easy-to-use experience for a mobile device user. Additionally, a POSITA would have understood that mobile devices with touch screens and GUIs were well known in the prior art, as I discussed above. *See* Section V.F-G. Further, such touch screens, GUIs, and/or buttons would have improved ease of use for users to make selections as well, further motivating a POSITA to implement *Chihara's* system according to *Chang's* teachings. Such a modification would have been using a known solution in the prior art that was well within the skillset of a POSITA.

171. A POSITA would have had a reasonable expectation of success when modifying *Chihara-BluetoothSpec-Everett* per *Chang's* teachings. Indeed, *Chihara*, *Everett*, and *Chang* all teach similar mobile devices, including *Chihara* already depicting a mobile phone with an LCD screen and buttons. *Chihara*, [0078]-[0083], Figs. 7-9; *Everett*, 2:19-3:31, Figs. 1-2; *Chang*, [0002], [0073], [0260]. A POSITA would have understood that modifying the *Chihara* combination per *Chang* would have merely required including software or programming instructions and optionally hardware (e.g., substituting a touch-enabled screen instead of a non-touch enabled screen) for allowing a user to utilize user inputs to make selections at the mobile device.

172. In the case of modifying software or other programming instructions or simply utilizing *Chihara's* native user interfaces, *Chang* teaches utilizing a variety of such user interfaces, so a POSITA would have had a reasonable expectation of success when implementing any of the user interfaces *Chang* teaches (or *Chihara's* native user interface) for making selections. In the case of optionally modifying *Chihara* to substitute its LCD screen for a touch screen or to implement other user interfaces in hardware, a POSITA also would have had a reasonable expectation of success for such modifications. A POSITA would have understood that commercially available mobile devices including buttons, touch screens, and/or GUIs would have been readily available, off-the-shelf devices, such that a POSITA would have been able to utilize a simple substitution of a commercially available, off-the-shelf device already configured with a touch screen or other user interface hardware and software, further providing a reasonable expectation of success for modifying *Chihara*. *See* Section V.F-G.

173. A POSITA would have understood that whether utilizing *Chihara's* native user interface or substituting individual components (e.g., a touch screen instead of a non-touch screen) or utilizing an off-the-shelf mobile device with a touch screen or other user interface(s) already installed instead of *Chihara's* mobile phone would have accomplished the same advantages discussed above, and any of these options would have had a reasonable expectation of success. Indeed, such a

modification would not have required a POSITA to personally physically modify *Chihara's* mobile phone, as mobile phones with user interfaces (e.g., buttons, touch-enabled screens) were well known, commercially available, off-the-shelf components from which a POSITA would simply choose. Indeed, as discussed above, in one scenario, a POSITA would have been motivated to utilize *Chihara's* native user interfaces in light of *Chang's* teachings, without requiring hardware or software changes. Regardless of which method is used to modify the *Chihara* combination (whether using *Chihara's* native user interfaces in light of *Chang's* teachings, simple substitution of hardware components, or simple substitution of an off-the-shelf mobile device), a POSITA would have understood that modifying *Chihara* in this way would have been using a known solution in the prior art that would have been well within the skillset of a POSITA. Thus, a POSITA would have had a reasonable expectation of success.

174. Further, *Chang*, like *Chihara*, teaches using a Bluetooth connection between devices, such as a mobile phone and an output device (e.g., audio device, video display device). *Chang*, [0075]-[0077], [0106], [0166]-[0167], [0197]. As I opined above, *Chihara* teaches bidirectional Bluetooth connections between a mobile phone, a headset, and a watch device. *See* Claim 1(Pre), 1(a)(ii). Thus, interactions between various devices (e.g., mobile phone, headset, watch apparatus) would have been according to the same wireless networking protocol, further

providing a reasonable expectation of success for modifying the *Chihara* combination. Indeed, a POSITA would have understood that data such as audio, video, and text would have been transmitted via Bluetooth in the same manner when modifying *Chihara* according to *Chang's* teachings, such that there would have been a reasonable expectation of success for this reason as well.

### F. Claim 1(a)(iv): a media cloner, associated with said media transformer, for making multiple copies of a single incoming data stream, thereby to enable said apparatus to redirect said single incoming data stream to a plurality of locations, at least some of said multiple copies being redirected via said media transformer.

#### *1. '990 Patent's Media Cloner Description*

175. The '990 Patent describes a media cloner as "making multiple copies of the data, in particular but not exclusively an incoming communication[.]" *'990 Patent*, 2:48-52, 3:41-43, 4:14-16 ("multiplication, i.e., cloning"), 6:45-50 ("duplication of its input channel content"), 6:67-7:9. In one specific example, the '990 Patent describes cloning audio from an incoming phone call, transmitting one copy of the audio to speakers, transforming a second copy from audio to text, and transmitting that text to a display. *Id*., 9:40-54; *see also id*., 11:52-12:2.

#### *2. Chihara-Everett Teaches a Media Cloner*

176. As discussed at length above, *Chihara-Everett* teaches a media cloner that performs the same role in the same phone call scenario as is described by the '990 Patent. *See* Claim 1(Pre)-1(a)(i), 1(a)(iii). *Chihara* teaches (1) outputting phone

call audio to a wireless headset and (2) using a watch apparatus (i) for bidirectional video/images between the watch and mobile phone and also (ii) for receiving text at the watch. *Chihara*, [0001], [0006], [0009], [0049], [0078]-[0083], [0114]-[0117], [0132], [0055], Figs. 7-9. Thus, *Chihara* already teaches receiving a media call and outputting portions of that media (e.g., audio, video) to a plurality of output devices. Indeed, *Chihara-Everett* teaches transmitting phone call audio to a headset and translated speech-to-text text to a watch apparatus, both of which are transmitted using bidirectional Bluetooth connections.

177. A POSITA would have understood that the proposed combination of *Chihara* modified by *Everett* (as described above) requires two copies of the phone call data—one sent as audio to the wireless headset and a second, transformed into text, sent to the wireless watch display. Indeed, a POSITA would have understood that the incoming phone call audio would have been copied to output both 1) "original" phone call audio to the headset and 2) perform a speech-to-text transformation using a second copy of the phone call audio to thus output text. A POSITA would have understood that the '990 Patent does not describe specialized hardware for performing such a task, but that a mobile phone is utilized in some embodiments. *'990 Patent*, *generally* 5:41-61, 8:5-10, 9:62-12:2, Fig. 1. A POSITA would have understood then that a mobile device as taught in the '990 Patent would have had this copying capability. I note that *Chihara* teaches the same type of mobile

device as described in the ’990 Patent, i.e., a mobile phone. *Chihara*, [0078]-[0083], [0049]-[0050], Figs. 7-9.

178. A POSITA would have understood that cloning (e.g., copying) is a basic function of computing devices, including mobile phones. *See* Section V.M. A POSITA would have understood that copying digital data would have been a basic function of a microprocessor. Indeed, copying/cloning digital data is a trivial task performed by standard computer processors and memory, using basic software routines. *See* Section V.M. A POSITA would have understood that such copying would not require a large memory size either because only a small amount of audio would be copied at a given time while the phone call is ongoing. That is, the speech-to-text transformation would have occurred while the phone call is ongoing, thus a large memory would not have been required to store lengthy conversations, for example. Additionally, *Everett* teaches a mobile device such as a mobile phone performs speech-to-text transformation, further evidencing that the memory of a mobile phone is sufficient for such a task.

179. A POSITA would have understood that in the *Chihara* combination, a voice signal would have been received at the mobile phone, digitized, copied, and prepared for transmission to output devices (e.g., performing compression, modulation, and/or other processes for transmitting audio to the headset and transmitting transformed text to the watch via a Bluetooth connection). A POSITA

would have understood that the phone call audio to the headset would thus have been cloned and the phone call audio sent to the speech-to-text transformation software would have been a transformation. Therefore, at least some (at least one) of the copies would have been redirected via the media transformer to transform voice to text.

180. Thus, a POSITA would have understood that *Chihara's* mobile phone processor programmed to clone data is a media cloner, as claimed. A POSITA would have understood such because processors performing copying of digital data would have "cloned" the data, and cloning digital data was a straightforward, routine task. Further, a POSITA would have understood that such a media cloner would have been associated with a media transformer, because *Chihara-Everett's* speech-to-text transformation requires a copy of the phone call audio to transform and uses software executed by a processor (which also executes media cloning functionalities). Further, the mobile phone's processor would have been in control of the speech-to-text transformation software, which a POSITA would have understood would have made the media cloner and media transformer to be associated with one another. Thus, a single incoming data stream (e.g., phone call) received at a mobile device would have been cloned to output the data stream to a plurality of locations (i.e., *Chihara's* headset and watch apparatus) and where "*at least some of the copies being*

*redirected via said media transformer*" because speech-to-text transformation is performed on at least some of the copies..

### *3. Motivation to Combine Chihara and Everett*

181. The motivations to combine are discussed above at Claim 1(a)(iii). These motivations apply equally here and are incorporated by reference. *See* Claim 1(a)(iii). Additionally, a POSITA would have had a reasonable expectation of success because *Everett* teaches a mobile phone that stores speech-to-text transformation software in memory. A POSITA would have understood that *Chihara's* similar mobile phone would also have had sufficient memory to store such software and to store digital copies of phone call audio. In particular, a POSITA would have understood that copying segments of ongoing phone call audio would not have required a large memory size because portions of the phone call audio would have been short segments at a time. This would have allowed the mobile phone to output text to the watch apparatus in segments while the phone call is ongoing so the user can follow along with the translated text instead of having to wait for large batches of audio to be translated to text. Thus a large memory would not have been required to store lengthy conversations, for example. Additionally, *Everett* teaches a mobile device such as a mobile phone performs speech-to-text transformation, further evidencing that the memory of a mobile phone is sufficient for such a speech-to-text transformation task.

182. To the extent it is argued that the modified *Chihara's* mobile phone would not have had sufficient memory to perform such transformation and/or cloning, a POSITA would have been motivated to either add more memory or select a commercially available, off-the-shelf mobile device that had sufficient memory for such a task. Indeed, such would have been a tradeoff of potentially increased cost to add additional memory in exchange for the advantageous benefits discussed above for providing a user with transformed speech-to-text. Further, because prior art, like *Everett*, teaches mobile phones perform such transformations, such a modification would have had a reasonable expectation of success.

### G. Claim 2: Apparatus according to claim 1, further comprising a user interface associated with said scout device for allowing a user to select between available compatible equipment to reroute data thereto.

183. *See* Claim 1. The *Chihara* combination as modified by *Chang* teaches a user interface associated with a "scout device" (e.g., processor and Bluetooth module including any programming instructions) allowing a user to select between available compatible equipment (output devices) to transmit media to or perform other jobs at the output devices. *See* Claim 1(a)(iii).

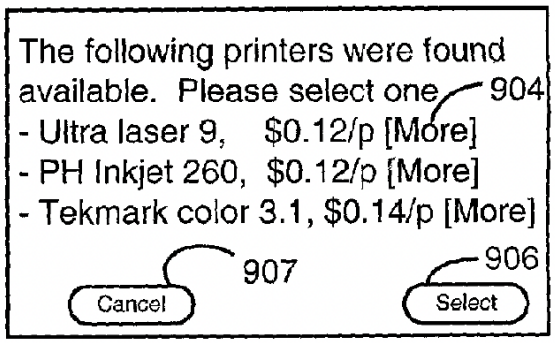


Fig. 9 B

*Chang*, Fig. 9B; *see also Chang*, [0074], [0046], [0050], [0089]-[0090], [0203], [0222], [0259]-[0261] (including teaching regarding Figs. 9A-9F, which depict GUIs for users to make selections including selecting between available and compatible output devices), [0265]-[0267] (including teaching moving a cursor on a GUI and selecting a "select" command), Figs. 9A-9F. As I opined above, *Chang* teaches numerous output devices other than printers, including audio and display devices. *See* Claim 1(a)(iii).

184. As discussed above, a POSITA would have been motivated to use *Chang's* GUI teachings to guide *Chihara's* implementation, providing users an ability to make selections required to implement *Chihara's* expressly described functionality. The motivations to combine are discussed above at Claim 1(a)(iii). These motivations apply equally here and are incorporated by reference.

### H. Claim 3: Apparatus according to claim 1, wherein said announcer is an active device, operable to transmit at least status information to respective surroundings.

185. The ’990 Patent distinguishes between active and passive announcer devices. Active announcer devices include devices that transmit data and passive devices non-transmitting mechanisms like barcodes that can be scanned by scout devices to obtain information:

> Typically, the announcer device 30 may be ***active*** (***transmitting***) or passive (reacting, or reflecting). A simple example of a passive announcer device is a sticker attached to a phone and supplying say device type and conditions of use information using a barcode. The sticker may be scanned and comprehended by the scout devices 32. In addition to a sticker, a passive announcer may be provided using an LCD screen displaying a barcode.

*‘990 Patent*, 7:35-42.

186. The *Chihara* combination teaches an “active” announcer device such as Bluetooth module 35 (controlled by a microprocessor and configured to transmit an ID packet) of mobile telephone device 11B. *See* Claim 1(a)(i). A POSITA would have understood that such a Bluetooth module controlled by a microprocessor and configured to transmit an ID packet is an “active device” because said device ***transmits*** status information (e.g., its availability to connect with nearby Bluetooth-enabled devices). Indeed, a POSITA would have understood that Bluetooth modules used in the combination such as I opined on above would have both transmitted and

received signals including signals that include status information (e.g., availability, capability), and thus a POSITA would have understood such Bluetooth modules to be "active" devices rather than merely "passive" devices, such as a bar code or sticker. *See* Claim 1(a)(i).

### I. Claim 9: Apparatus according to claim 1, further comprising control functionality operable to carry out said rerouting through locally available network infrastructure.

187. *Chihara* teaches using a Bluetooth connection between the mobile phone, headset, and watch apparatus. *See* Claim 1(Pre). A POSITA would have understood that the rerouting would have included control functionality (e.g., a processor and programming instructions) operable to carry out said rerouting through locally available network infrastructure (e.g., Bluetooth network infrastructure, including Bluetooth hardware and software for Bluetooth connections). A POSITA would have understood that such local network infrastructure would have included a processor and Bluetooth module in the modified *Chihara*, as well as Bluetooth modules in Bluetooth-enabled peripheral devices (e.g., headset, watch apparatus) and programming instructions for said Bluetooth modules.

### J. Claim 24 - A cellular telephone comprising the apparatus of claim 1.

188. *Chihara's* mobile device that forms the basis of the combination set forth above is a cellular telephone. *See* Claim 1. For example, *Chihara* teaches a

mobile videophone system 10B, including mobile telephone device 11B ("mobile communication device"). *Chihara*, [0078]-[0081], Fig. 7.

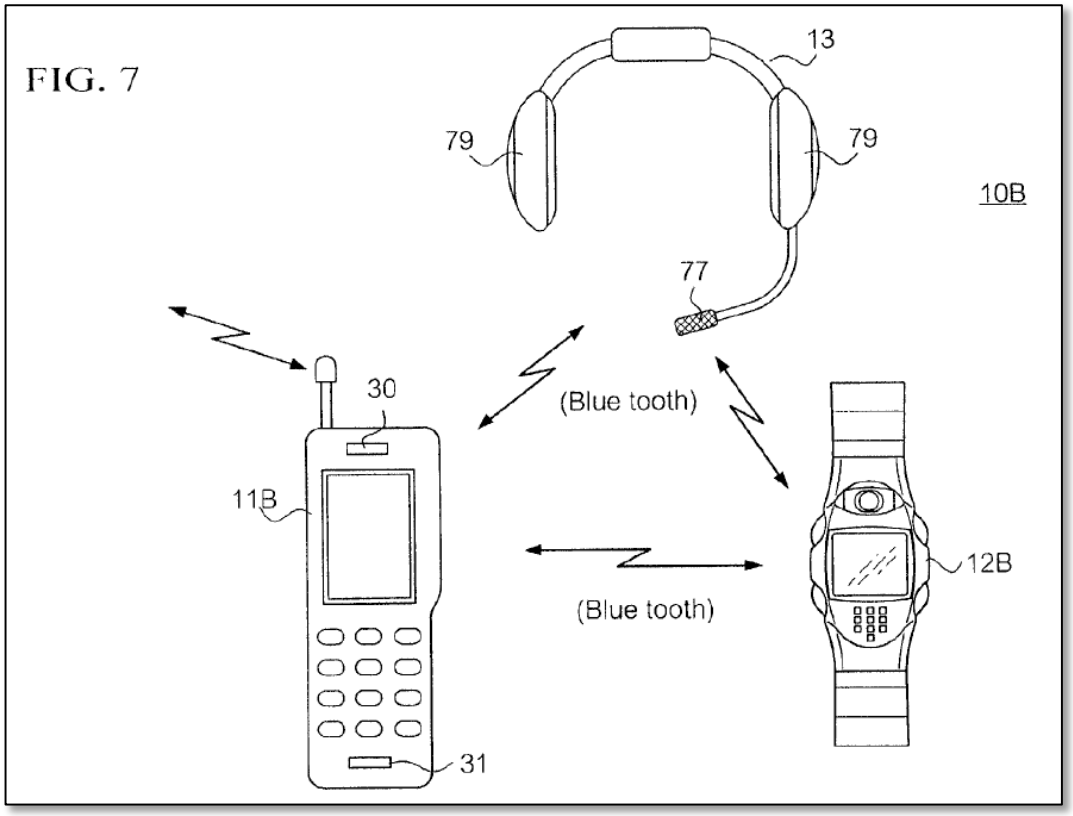


*Chihara*, Fig. 7.

189. A POSITA would have understood that *Chihara's* mobile phone is a cellular telephone capable of making and receiving phone calls. *Chihara*, [0013], [0079] ("The mobile telephone device 11B can process the image sequence by such as MPEG4, and can establish communication with a telephone set connected to a fixed telephone network or another mobile telephone set accommodated in a mobile communication network."), [0080], [0102]-[0103], [0049], [0057], [0073], [0109], [0113] ("This voice data is transmitted through the W-CDMA baseband processing

unit 28 and the RF unit 27 under the control of the microprocessor 23B, and sent to the calling party through the base station 14 and the mobile communication network[.]"), [0118]. Fig. 9 below depicts W-CDMA baseband processing unit 28 and RF unit 27 (together annotated green), which a POSITA would have understood would have been utilized (along with antenna 26) for making and receiving calls via a cellular network, such as a W-CDMA cellular network:

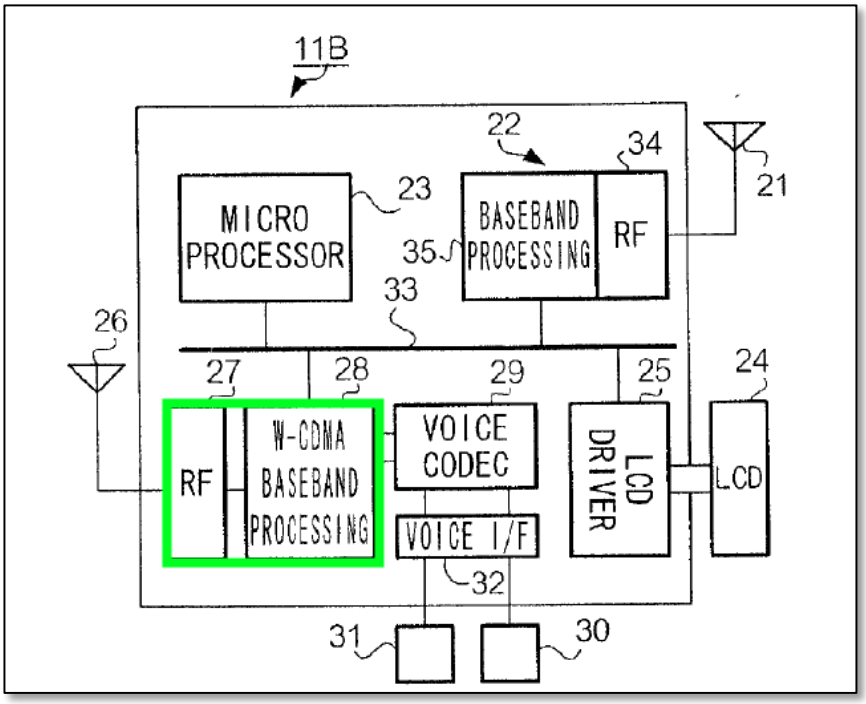


*Chihara*, Fig. 9 (annotated).

190. Indeed, a POSITA would have understood that a mobile communication network such as taught by *Chihara* would have included a cellular communication network. For example, *Chihara* teaches a W-CDMA (wide-band code division multiple access) baseband unit in mobile telephone 11B for

communicating with such a W-CDMA cellular network. *Chihara*, [0050], [0053], [0056]-[0057], [0069], [0071], [0073], [0109], [0113], [0118], [0121], Fig. 9. *See* Section V.B (discussing WCDMA is a cellular network).

## X. OPINIONS REGARDING GROUND 1 ('866 PATENT): CLAIMS 22-24 ARE OBVIOUS OVER *CHIHARA*, *BLUETOOTHSPEC*, *EVERETT*, AND *CHANG*

### A. Claim 22(Pre) - Apparatus for routing and rerouting streaming data, the apparatus being mobile and comprising:

#### *1. Chihara Teaches a Mobile Apparatus for Routing and Rerouting Streaming Data*

192. To the extent the preamble is limiting, *Chihara* teaches Claim 22(Pre). *Chihara* discloses a mobile video telephone system ("apparatus for routing and rerouting streaming data") comprising a mobile telephone, a wrist watch-type information apparatus, and a wireless headset. *Chihara*, [0078]. In one embodiment, *Chihara* teaches mobile videophone system 10B comprises mobile telephone 11B, wrist watch-type information apparatus 12B[4], and headset 13, as depicted in Fig. 7 below.

---

[4] A POSITA would have understood reference to wrist watch-type information apparatus 12A is a typographical error in *Chihara*. *See Chihara*, [0101], [0108] stating "wrist watch-type information apparatus 12A." Elsewhere, the watch apparatus is referred to as 12B, thus a POSITA would have understood that "12A" is a typographical error. *See Chihara*, *generally* [0078]-[0079], [0081]-[0084], [0090], [0100]-[0105], Figs. 7-9, 12A-12B, 13, 15.

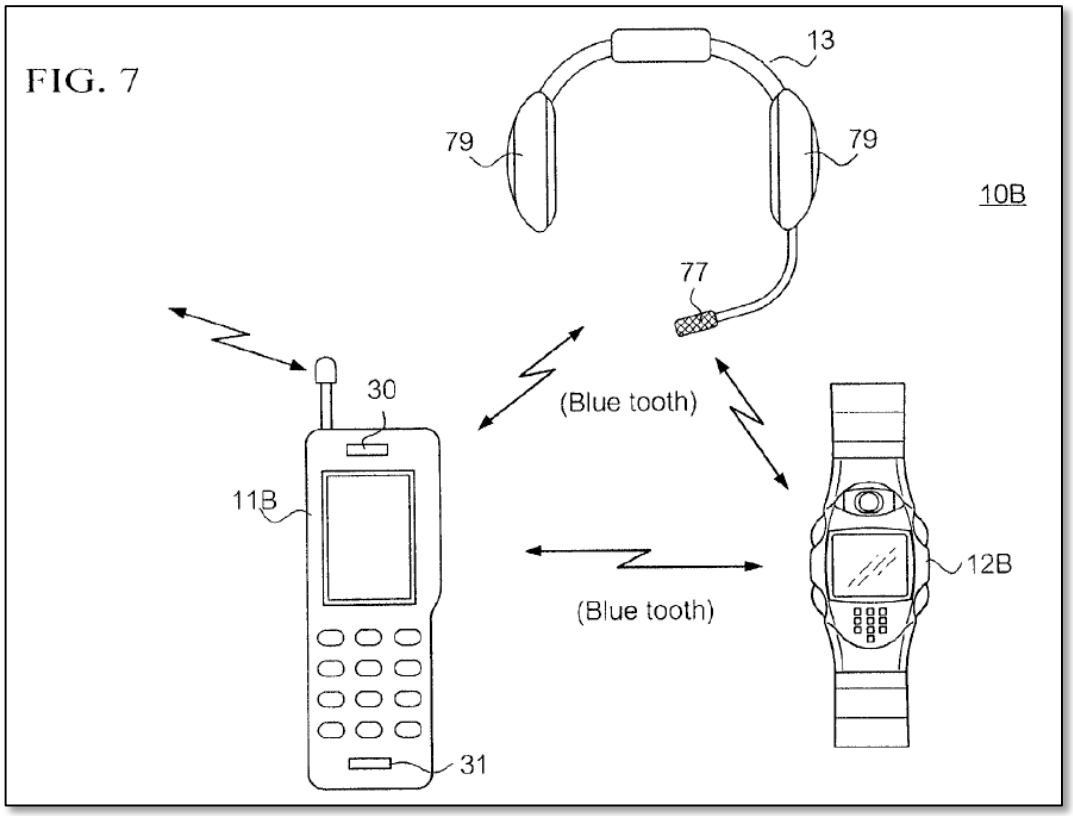


*Chihara*, Fig. 7. *Chihara* teaches that each of mobile telephone device 11B, wrist watch-type information apparatus 12B, and headset 13 communicate with each other via local bidirectional radio communication (short-distance radio communication) using, for example, Bluetooth. *Chihara*, [0079]-[0080], [0083], [0110]. A POSITA would have understood that such bidirectional communications via Bluetooth would have routed or rerouted streaming data, such as phone call audio, from a mobile phone to the headset, for example. *Id.* Fig. 13 below depicts a Bluetooth piconet with the mobile telephone as the "master" device and the headset and wrist watch-type apparatus as "slave" devices.

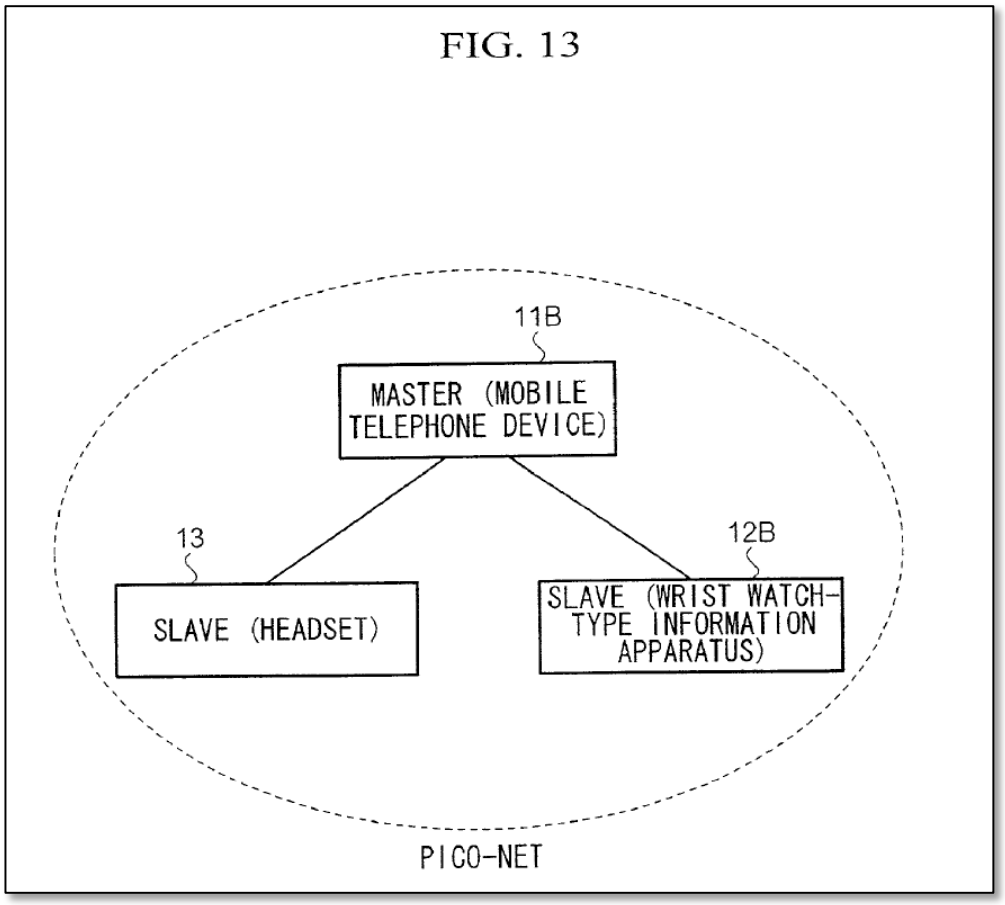


*Chihara*, Fig. 13.

193. As described below, the mobile telephone device reroutes phone call audio to a selected headset and video or text to a selected wrist watch-type information apparatus using Bluetooth, and the selected headset and wrist watch-type information apparatus route information back to the mobile phone (and ultimately to a calling party on the other end of the phone call or video call) using the bidirectional Bluetooth connection. A POSITA would have understood such including because the headset includes a microphone for receiving user speech to be routed to the mobile phone and to the other party on the phone call and because the

wrist watch apparatus routes, for example, video or images to the mobile phone and ultimately to the other party on the call.

194. Regarding rerouting communication data, *Chihara* teaches rerouting phone call audio from the mobile telephone that receives the call to another device (e.g., headset 13). For example, *Chihara* teaches mobile telephone device 11B "can establish communication with a telephone set connected to a fixed telephone network or another mobile telephone set accommodated in a mobile communication network." *Chihara*, [0079], [0109]. *Chihara* teaches that "upon receipt of the voice data from the calling party, the microprocessor 23B of the mobile telephone device 11B sends to the [B]luetooth module 22 an instruction to transmit packets to the headset 13." *Chihara*, [0110]. After said instruction is transmitted, "a series of voice data received from the calling party are sent to the [B]luetooth module 22. The [B]luetooth module 22 places on the SCO packets the voice data received from the calling party, and transmits them to the headset 13 (step S21)." *Id.* Upon receipt of the packets, the headset processes the packets and outputs the call sound from speaker 79. *Chihara*, [0111]. Similarly, the user can speak with the calling party via the headset's microphone (e.g., microphone 77), such that the communication between the headset and mobile phone is bidirectional. *Chihara*, [0080], [0111]-[0113], Fig. 9.; *see also* Claim 22(a)(ii) regarding bidirectional communication. A POSITA would have understood that such phone call audio would have been

bidirectional because the other party communicates with a user and the user communicates with the other party. Therefore, the phone call audio is transmitted in two directions and is thus bidirectional.

195. Similarly, *Chihara* teaches routing image data from the calling party to the wrist watch-type information apparatus (and vice versa). *Chihara*, [0114]-[0118], [0006]-[0009], Fig. 7.

196. Further regarding routing streaming data, *Chihara* in view of *Everett* teaches routing phone call audio that is transformed from speech to text at the mobile device. *See* Ground 1 ('990 Patent), 1(a)(iii) and Ground 1 ('866 Patent"), 22(a)(iii).

**B. Claim 22(a) - a streaming device comprising:**

197. *Chihara* teaches a mobile videophone system 10B, including mobile telephone device 11B ("streaming device"). *Chihara*, [0078]-[0081], Fig. 7. I note that *Chihara* teaches phone call audio is streamed from a mobile device to peripheral devices including a headset. *See* mappings for Claims 22(a)(i)-22(a)(iv), which are hereby incorporated.

**C. Claim 22(a)(i) - an announcer device configured to indicate to surrounding media handling devices that said streaming device is available to receive streaming data, thereby to enable receipt of rerouted data from said surrounding media handling devices, and**

198. *See* Claim 22(a) and Ground 1 ('990 Patent), claim 1(a)(i).

**D. Claim 22(a)(ii) - a scout device configured to scan surroundings of said streaming device to identify surrounding media handling devices as being compatible to handle given media, and determine availability of said identified compatible media handling devices, thereby to reroute streaming data between said streaming device and a selected one of said surrounding media handling devices, said scout device further being configured to determine media type requirements of said compatible media handling devices, said apparatus configured to set up a bidirectional wireless communication link between said streaming device and a respective one of said media handling devices, said bidirectional link carrying streaming data over either direction as required of said bidirectional link;**

199. *See* Ground 1 ('990 Patent), claim 1(a)(ii).

**E. Claim 22(a)(iii) - a media transformer, configured to transform media into forms that accord with respective determined media type requirements, wherein there are a plurality of said types;**

200. *See* Ground 1 ('990 Patent), claim 1(a)(iii).

**F. Claim 22(a)(iv) - a user interface for allowing a user to select one of said media type requirements for transforming at said media transformer, and**

201. *See* Ground 1 ('990 Patent), claim 1(a)(iii).

**G. Claim 22(b) - a media cloner, associated with said media transformer, for making multiple copies of a single incoming data stream, thereby to enable said apparatus to redirect said single incoming data stream to a plurality of locations, at least some of said multiple copies being transformed via said media transformer.**

202. *See* Ground 1 ('990 Patent), claim 1(a)(iv).

**H. Claim 23(Pre) - Apparatus for routing'and[5] rerouting media data, the apparatus being mobile and comprising:**

203. *See* Ground 1 ('866 Patent), claim 22(Pre).

**I. Claim 23(a) - a media data transfer device comprising:**

204. *See* Ground 1 ('866 Patent), claim 22(Pre), 22(a).

**J. Claim 23(a)(i) - an announcer device configured for indicating to surrounding media handling devices that said media data transfer device is available to receive media data, thereby to enable receipt of rerouted data from said surrounding media handling devices, and**

205. *See* Ground 1 ('866 Patent), claim 22(a)(i), 23(a).

**K. Claim 23(a)(ii) - a scout device configured for scanning surroundings to identify surrounding media handling devices as being compatible with given media and determine availability of said identified compatible media handling devices, thereby to reroute media data from said media data transfer device to a selected one of said surrounding media handling devices, said scout device further being configured to determine media type requirements of said media handling devices;**

206. *See* Ground 1 ('866 Patent), claim 22(a)(ii).

**L. Claim 23(a)(iii) - a media transformer, configured to transform media into a form that accords with respective determined media type requirements, there being a plurality of said media type requirements;**

207. *See* Ground 1 ('866 Patent), claim 22(a)(iii).

---

[5] A POSITA would have understood that the claimed "routing'and" is a typographical error that should read "routing and" without the apostrophe.

**M. Claim 23(a)(iv) - a user interface for allowing a user to select one of said plurality of media type requirements for transforming at said media transformer, and**

208. *See* Ground 1 ('866 Patent), claim 22(a)(iv).

**N. Claim 23(a)(v) - a media cloner, associated with said media transformer, for making multiple copies of said media data, thereby to enable said apparatus to redirect said media data to a plurality of locations, at least some of said multiple copies being transformed at said media transformer.**

209. *See* Ground 1 ('866 Patent), claim 22(b).

**O. Claim 24 - The apparatus of claim 23, wherein said media type requirements comprise a screen capability.**

210. *Chihara-Everett* teaches a media transformer and media type requirements. *See* Claim 22(a)(iii). For example, a user would have selected particular media type requirements (e.g., choosing to output text such as from speech-to-text per *Everett's* teachings or choosing to output phone call audio and receive microphone input from headset 13 and microphone 77) using the modified *Chihara's* mobile phone 11B. A POSITA would have understood that devices such as the headset and watch apparatus would have had certain capabilities, as indicated by the Service Discovery Protocol (*see* Claim 22(a)(ii). In the case of *Chihara's* watch apparatus, which includes a screen, and *Chihara's* headset, which does not include a screen, *Chihara's* watch apparatus would have included a screen capability, such as a screen for displaying text, images, or video, for example. A POSITA would have understood that the watch would have indicated its screen

capability to the mobile phone during the Bluetooth Service Discovery Protocol process, which would have indicated to the mobile phone that the watch apparatus was capable of displaying images, text, or video on its display. Indeed, a POSITA would have understood that a screen capability would have been met by a device that includes a screen and thus the device is capable of displaying routed media on its screen. A POSITA would have understood that, on the other hand, a device without a screen would not have been capable of displaying such images, text, or video on a display, as the device would have lacked a screen capability. As discussed above, a user would have utilized a user interface to select such a media type requirement. *See* Claim 22(a)(iv).

211. *Chihara's* Fig. 15 below depicts display LCD 44 of watch apparatus 12B:

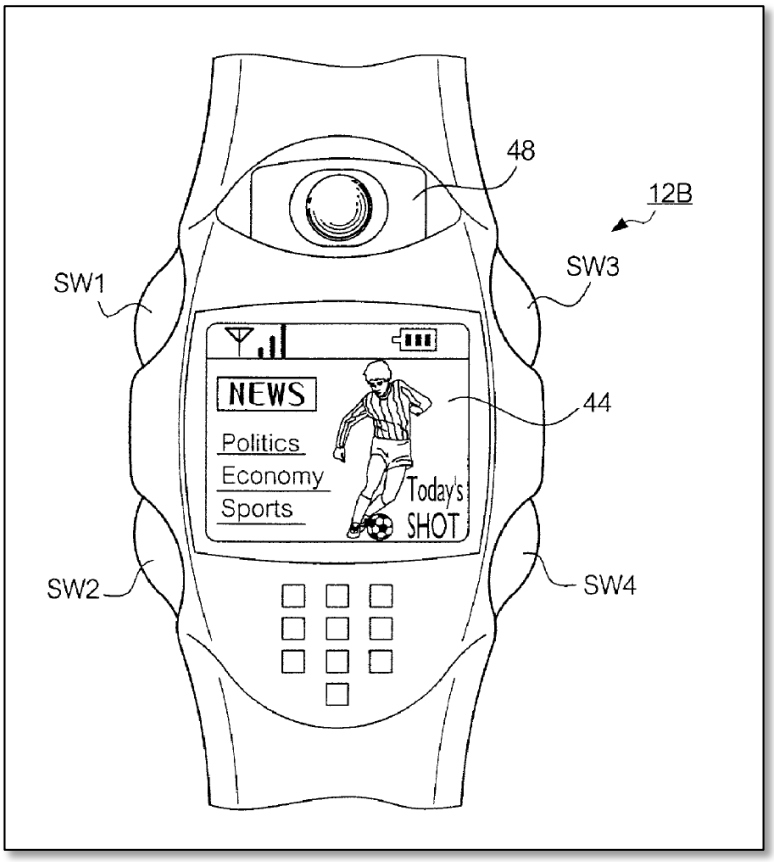


*Chihara*, Fig. 15. Additionally, *Chihara's* Fig. 9 below depicts components of watch 12B, including LCD 44 (annotated pink), LCD driver 45 (annotated green), image processing unit 49 (annotated red), MPEG4 video CODEC 51 (annotated yellow), and watch CPU 43B (annotated blue), which a POSITA would have understood would have functioned together to display images, video, and/or text on LCD 44. In particular, *Chihara* teaches that the wrist watch-type apparatus receives data packets from the mobile telephone device and utilizes the MPEG video CODEC 51 to decode the coded image data to generate the image data, and LCD driver 45 drives

the LCD 44 using this image data, which results in the image sent from the calling party being displayed on LCD 44. *Chihara*, [0115]-[0116].

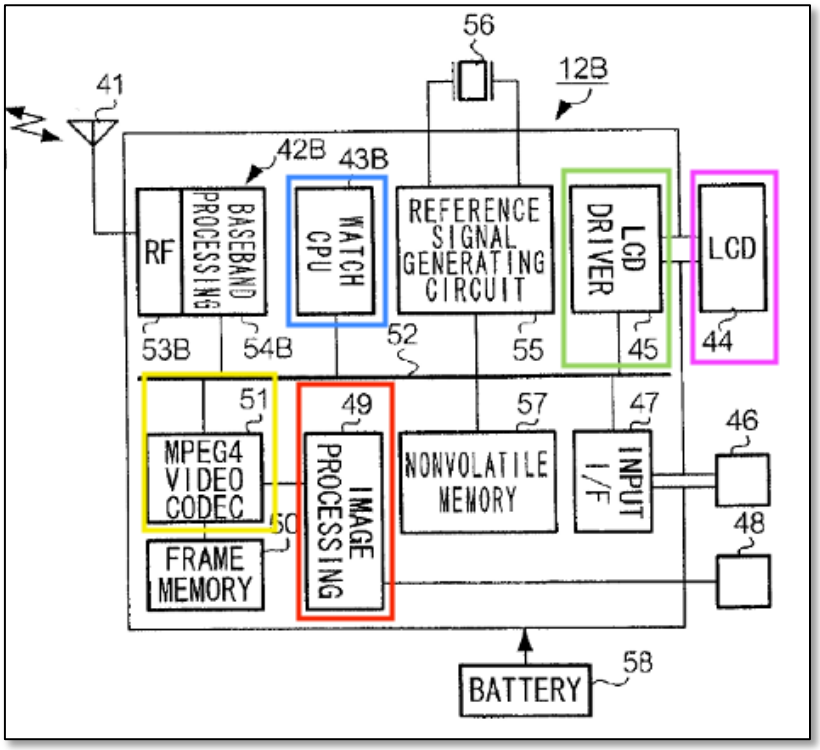


*Chihara*, Fig. 9 (annotated excerpt), [0049]-[0051], [0078]-[0083], [0090], [0094], [0097], [0114]-[0117], [0129]-[0130]. Further, I note that *Chihara's* headset 13 does not include components such as an MPEG CODEC for encoding/decoding image data or LCD display for displaying images/video, such that a POSITA would have understood that headset 13 lacks a screen capability. *Chihara*, Fig. 9.

## XI. CONCLUSION

212. I hereby declare under penalty of perjury under the laws of the United States of America that the foregoing is true and correct, and that all statements made of my own knowledge are true and that all statements made on information and belief

are believed to be true. I understand that willful false statements are punishable by fine or imprisonment or both. *See* 18 U.S.C. § 1001. If called to testify as to the truth of the matters stated herein, I could and would testify competently.

Date: July 3, 2024

Respectfully submitted:

Dr. Sayfe Kiaei

# Exhibit A

# Dr. Sayfe Kiaei

**School of Electrical, Computer and Energy Engineering**
**Arizona State University, Tempe, AZ 85287**
**Sayfe@asu.edu**

***Sayfe Kiaei***
**Professor, Motorola Endowed Chair Professor**
**School of Electrical, Computer and Energy Engineering, Arizona State University, Tempe, AZ**


## FIELDS OF SPECIALIZATION

- **Integrated Circuits (IC)**, **Radio Frequency**, Analog & Digital IC, Mixed-Signal IC, VLSI, Processor, ASIC, RFIC, Receiver, Transmitter, Synthesizer, RF system, VLSI, Processor, DSP processor
- **Power Management**: Power Management IC, Battery Management, Energy System, Energy Management
- **Sensors & Bioelectronics**: RFID, ZIGBEE, Bluetooth, Biosensors, Hearing Aid sensors, Implanted devices electronics, Medical Implanted Communication System (MICS)
- **Signal Processing**: Digital Signal Processing, Adaptive Signal Processing, Video & Audio Signal Processing, Adaptive Audio Array processing, Audio and Acoustic & Speech processing.
- **Communication Systems**: 1G-5G, 2-way radio, BT, WIFI, Sensors, ZIGBEE, wireless sensors, CABLE, DSL, Optical

## DEGREES

- **Ph.D.,** Electrical and Computer Engineering, Washington State University, 1987
- **M.S.**, Electrical and Computer Engineering, Washington State University, 1984
- **B.S.E.E.,** Electrical Engineering, Northeastern University, Washington State University, 1982

## ACADEMIC POSITIONS

**Fall 2001-Present: Professor, Motorola Endowed Chair Professor in Analog and RFIC School of Electrical, Computer and Energy Engineering, Arizona State University, Tempe, AZ**

- **Research Projects**:
    - Integrated Circuits: Analog and digital IC, Radio Frequency IC, RF transceiver, VLSI, Processor System Architecture, ASIC
    - Power Management IC, Battery Management & Sensing, Integrated Power Electronics
    - Sensors, Bioelectronics, Biosensors, Hearing Aid Electronics, Implanted devices electronics
    - Digital Signal Processing, Audio processing, adaptive signal processing, Array processing, Adaptive Audio Array processing, Audio and Acoustic & Speech processing,
    - Communication system, 1G, 2G GSM, 3G (UMTA, WBCDMA), 4G LTE, 5G, wireless mobile system, LTE, WiFi, Bluetooth, Wireless system standards, MODEM standards, CABLE MODEM DOCIS, DSL
- Research Funded by NSF, USAID, DARPA, JPL, NASA, Motorola Inc., Intel Inc., Broadcom, Qualcomm, Raytheon, General Dynamics, Texas Instruments, and over 10 other industries.

**2004-2020, Director and founder of NSF IUCRC Center Connection One,** School of Electrical, Computer, and Energy Engineering, Arizona State University, Tempe, AZ; https://connectionone.org

- The NSF Connection One Industry/University Cooperative Research Center was established the center in 2002 with focus on communication system, integrated Circuits and Systems, wireless system, RF, sensors, and related areas. The center has five university member with over 30 industrial members. Total funding over $10M.

**2021-Present, Director and PI, USAID, Center of Excellence for Energy (COE) in Egypt , Funding $22.5M**

- Director and PI: COE - Energy Center funded by the USAID.
    - USIAD Centers of Excellence for Energy (COE) - established the Center of Excellence for Energy (COE/E) in Egypt with funding and support from the United States Agency for International Development (USAID/Egypt) in November 2021. COE/E is a partnership between ASU-US and three Egyptian partner universities (EPUs): Ain Shams University (ASU-EG), Aswan University (AU), and Mansoura University (MU).

**2014-2020, Director, USAID, US-PCASE: Center for Advance Studies in Energy, Funding $18M.**
**https://uspcase.asu.edu/**

- **Director and PI:** PCASE - Partnership Center for Energy systems, Energy Center funded by the USAID.
- USIAD Centers for Advanced Studies in Energy program (USPCAS-E) is a partnership between Arizona State University and two leading Pakistani universities: the National University of Science and Technology (NUST) Islamabad and the University of Engineering and Technology in Peshawar (UET).
- PCASE has developed two new Graduate schools of Energy. Within 5 years, the center has over 1000 MS and PHD Students, with 14 new energy degrees in MS and PhD, two new building with 20+ energy labs in the power system, grid, power electronics, renewable energy, PV, Wind, Hydro, bio-fuel, fuel cell, batteries and storage, and thermal areas.

**2008-2012: Associate Dean of Research, Ira A. Fulton Schools of Engineering, Arizona State University**

Responsible for leading the research infrastructure, promoting and developing research programs with industry and federal agencies, leading large multi-university proposals, investing and providing seed funding to foster new research areas, and promoting graduate program in the college of engineering. Research Enterprise support included:

- Increase College of Engineering research funding from $50M to over $80M.
- Working with Vice President for Research, Dean's, and directors on University-wide research initiatives.
- Established the first NSF Engineering Research Center (ERC) at the ASU on Solar Energy QESST. Managed, organized and planned the ERC proposal process. ASU is the lead school partnering with MIT, Georgia Tech, U of Delaware, Cal-Tech, U of New Mexico, and UA.
- Lead several trans-disciplinary 4M research projects (4M: multi-million, multi-investigator, multi-disciplinary, multi-university grants) in energy, security, and related initiatives.
- Oversight of over 20 existing research centers in the college of Engineering.
- Engage with industry and federal government to establish new research collaborations.
- Organized workshops and supported proposals for NSF, NIH, DOE, DOD, DARPA, etc.
- Organized workshops for new assistant professors to apply for NSF CAREER Awards. ASU CAREER awards grew from 3 annual awards in 2008 to over 15 CAREER awards by 2012.
- Research Administration and pre-award proposal administration for the schools. Developed a decentralized research administration and advancement team for the Schools supporting 5 schools, 12 departments, over 220 engineering faculty, with funding over $70M.



IPR2024-01050
Apple EX1003 Page 158

- Annual budget over $7M for supporting research centers, seed funding for new center, cost sharing, proposal support, equipment and infrastructure support, graduate scholarships, and research administration.
- ADR Staffs included, Director of industrial and government liaison, Director of research administration, and 14 research advancement staff.
- Graduate Programs: Recruiting, Fellowships, marketing, outreach, coordination with departments

**1997-2001, Adjunct Professor, Electrical and Computer Engineering Dept., The University of Texas, Austin, Texas,** Taught graduate courses at UT Austin on Introduction to Telecommunication System and Digital Communications. Co-advised two Ph.D. program committees in IC design and Telecomm (while at Motorola)

**1987-1993, NSF Center For Digital / Analog IC (CDADIC) Co-Director,** NSF IUCRC Center director at Oregon State University. The CDADIC was established the center in 1987 with focus on integrated circuits at WSU, UW, and OSU with over 20 industrial members - https://cdadic.oregonstate.edu/

**1987-1993, Assistant / Associate Professor (Tenured) Electrical and Computer Engineering Department, Oregon State University, Corvallis, OR**

- Research and classes in Electronics, DSP, Communication system and networks, Wireless systems, MODEMS. Graduated 30 MS and Ph.D. students.
- Faculty Chair, Computer Engineering Program, Developed a new Computer Engineering Program at OSU in 1987

**INDUSTRIAL POSITIONS**

**1993-2001: Motorola Inc., Senior Member of Technical Staff, Personal Communication Sector, Austin, Texas** - Worked projects related to wireless communications, two-way push-to-talk radios, wireless networks, ADSL and MODEM RF, and related areas.

- **Motorola Cellular Division**, **Wireless Technology Center (WITC)**, **1997-2002.** Responsible for development of integrated circuits and systems for wireless handset. Lead number of projects including cellular (2G, 3G, 4G), wireless connectivity (Bluetooth and WIFI transceiver), GPS and location Receiver, wireless networks, 2-way radios and related areas. Worked on the development of various subcomponents including system design, link budget, RF front-end, RF receiver, RF transmitter, digital audio processing, audio processing, DSP, frequency synthesizer, ADC, DAC, filtering, analog front-end, power management, battery management, and baseband processor, baseband circuits and systems.
- **Motorola Semi-conductor products sector (SPS), Broadband Products Operations, 1995-1997,** Worked on the development of XDSL (ADSL, VDSL, G.lite), MODEM, and Optical broadband communication systems including OFDM, modulation, synchronization, equalization and the development of a single chip ADSL transceiver (*CopperGold*$^{Tm}$). The transceiver contained Analog Front End (A/D, D/A, Hybrid), custom DSP, baseband processor, DMT, modulation/demodulation, FFT, IFFT, echo canceler, time domain equalizer, front-end constellation mapping, Trellis code modulation, Viterbi decoder), audio processing, DSP, signal processing, and an on-chip DSP core.
- **Land Mobile Products Sector LMPS 1993-1995**, Responsible for Wireless digital two-way radios, developed RFIC, RF receiver, RF transmitter, digital audio processing, audio custom IC, DSP, frequency

synthesizer, ADC, DAC, hot spot wireless network, next generation of digital two-way radios, *"Talk about Radios"*, Japanese cellular systems (PHS).

- **Standards,** Represented Motorola in various standards including 2G-4G, GPS, Bluetooth working group, WiFi, 802.11, and DSL standards including T1E1, International Telecommunication Unit (ITU), T1E1, ETSI, 3GPPP, Universal ADSL Working Group (UAWG), Bluetooth working group, G.Lite working group, etc.
- **University relations,** Responsible for the development of collaborative research programs with several universities. Responsible for funding research in the areas of Wireless Transceiver IC Design, RF, and mixed-signal and baseband system architecture.

**1985-87: Member of Research Staff, Boeing Co.,** Bellevue, Wa, Flight Systems Research and Technology Center, summer. Design Engineer, Hardware and CAD tool development for system control.

## AWARDS

- IEEE Fellow 2004-Present
- IEEE Fellows CAS Committee Chair, 2009-2012
- Global Standards Award, For contributions in the International Telecommunication Unit (ITU) for Asymmetric Digital Subscriber Line (ADSL) G.Lite Standards. Motorola Inc., 1999.
- 10X Cycle Reduction Award, for development of new IC design process from DSP algorithm to IC layout, Motorola Inc., 1995.
- IEEE Darlington best paper Award, IEEE Circuits and Systems Society Best Paper Award, 1995. For "Characterization and Comparison of CMOS FSCL Circuits with Conventional CMOS for mixed-signal ICs," Published at: *IEEE Trans. on Circuits and Systems II, Sept. 93*.
- Carter Best Teaching Award, College of Engineering Best Teacher Award, Oregon State University, 1992. For *"outstanding and inspirational teaching in the College of Engineering"*. Award is selected by the confidential vote of all of the undergraduate students in the College of Engineering among over 125 professors in the College.
- Industrial University Fellowship (IUF) Award, National *Science Foundation*, 1993.
- Research Initiation Award, *National Science Foundation*, 1990-93.
- Outstanding Graduate Student Scholarship, Azur-*Data Inc*. WSU, 1984

## RESEARCH PROJECTS

### Partial list of Research Awards (1987-Present):

- **2021-2026 – COE – Center of Excellence for Energy, U.S. Agency for International Development (USAID)**
    - PI and Director, $22.5M.



IPR2024-01050
Apple EX1003 Page 160

- **2020-2022 - Center for Next Generation Wireless Spectrum Sharing (5-6G Spectral sharing) The National Science Foundation (NSF)**
  - SII Planning, PI, $300K.
- **2002-2020 – Industry/University Cooperative Research Center (IUCRC), The National Science Foundation (NSF) - Connection One**
  - NSF contribution $1.5M.
  - Annual Industry Contribution: Total over $7M.
- **2015-2016 – Integration of Smart Dynamic Optical Communication, The National Science Foundation (NSF)**
  - Integration of Smart Dynamic Optical Communication Networks for Intelligent Distribution of Power Workload and Data in Disaster, $200K
- **2015-2020 – U.S. Agency for International Development (USAID)**
  - PCASE – Center for Energy systems, PI and Director, $18M.
- **2013-2014 Arizona Space Grant Consortium, NASA**
  - Goddard Space Flight Center, RADHARD electronics, $200K
- **2012-2015 – Solar Energy, Private Donor**
  - Solar Energy Development on international **projects**, $2M
- **2011-2014 – Self-Characterization for Calibration MEMS Sensors, Semi-Conductor Research Corporation**
  - Self-Characterization for Calibration and Process Feedback of MEMS Devices, bio-sensor , $300K
- **2011-2013 - Bio-Sensors for Vital Signs Monitoring Device Design, The National Science Foundation (NSF**)
  - Remote wireless Bio-Sensors for Vital Signs Monitoring Device Design, $250K
- **2010-2011 – Adaptive Compensation of Analog circuits, The National Science Foundation**
  - Adaptive Compensation of Analog circuits imperfections using DSP methods, $150K,
- **2010-2011 – Adaptive Self-Healing Wireless Sensor, The National Science Foundation**
  - Autonomous Self-Healing Sensor Network Radio and Mixed-Signal Readout System Design National Science Foundation (NSF), $300K
- **2010-2020 – Solar Testbed, The National Science Foundation (NSF**), $45M (
  - QESST NSF ERC Center on Solar Energy, Testbed Director
- **2010-2015 – REU, undergraduate research projects, The National Science Foundation (NSF)**
  - Research Experience for Undergraduate Students, proejcts: adaptive audio, Glucose Amp-meter and impedeometer, total $400K
- **2008-2013 - Solar System, The Science Foundation of Arizona (SFAZ)**
  - PEPER- Photovoltaic Environmental Performance and Reliability for the Arizona-Wide Electric Grid, $1.2M.



IPR2024-01050
Apple EX1003 Page 161

- **2008-2009 - Medically implanted bio-sensor, The National Science Foundation (NSF)**
  - Medically implanted bio-sensor, wireless implanted bio-sensors, Wireless Glucose sensors, MICS, $200K
- **2007-2011 – MEMS implanted hearing aid and bio-sensors, The National Science Foundation (NSF)**
  - Micro-Power Multi-Phase on-chip MEMS Hearing Aid, Adaptive hearing aid audio processor, 2007-2011, $500K.
- **2007-2009 – Implantable Bio-Sensors, The National Science Foundation (NSF)**
  - High Efficiency Power Delivery and Front-End Module Design for Implantable Bio-Sensors $480K
- **2005-2009 - MIMO Wireless network, The National Science Foundation (NSF)**
  - Cognitive MIMO Communications for Dynamic-Spectrum Wireless Networks $150K
- **2005-2009 - Radio Network, The National Science Foundation (NSF)**
  - Autonomous Self-Healing Sensor Network Radio, , $250K
- **2005-2008 Integrated LiDAR on a chip, BAE Systems**
  - Integrated on-chip Time Measurement Circuits LiDAR; $650K
- **2005-2008 – Power Management Circuits, Freescale Semiconductor**
  - PWM, Battery & Power management, $150K
- **2005-2006 – RADHARD Electronics, DOD: Defense Advanced Research Projects Agency (DARPA)**
  - Radhard by Design - MRC/DARPA, Total funding $1.5M
- **2005-2010 - Wireless Integrated Nano Technology Center, State of Arizona**
  - WINTECH- Wireless Integrated Nano Technology Center Support, 450K annually, total $2.5M
- **2004-2005 – RFIC, NASA**
  - Integration of Ultra-Low power RF CMOS, $127K
- **2004-2008 – Implanted Neural-Enabled Prostheses bio-sensor, Deference Advance Research Project Agency (DARPA)**
  - Implanted Neural-Enabled Prostheses biosensor with Sensorimotor Integration, $500K
- **2004-2008 – NEMS RF Filters, Deference Advance Research Project Agency (DARPA)**
  - Nano-Mechanical RF Band pass resonator for 2GHZ RF Applications, with JPL, $2.2 M,
- **2003-2005 - Imllanted Neuro-Sensor, DOD-ARMY-ARL: Army Research Office (ARO)**
  - Implanted Neuro-sensor, $175K
- **2002-2005 – RFIC, WiFi, Intel Corporation**
  - Design of Multi-Standard RF Front-End Circuits for Cellular and WiFi, $300K
- **2002 – Geo-location, GPS, SRC**
  - LOW POWER ULTRA - WIDE BAND GEOLACTION SYSTEMS, $65K.
- **2001-2003 – UWB, WIFI, SRC (Semi-conductors research Corp)**



IPR2024-01050
Apple EX1003 Page 162

- Ultra-Wideband Transceivers for cellular and WiFi 802.11, $225K

- **1987-1993 - Design of Analog/Digital IC's, The National Science Foundation**
  - Center for the Design of Analog/Digital IC's ( CDADIC) 1987-1995, At Oregon State, $1.5M
- **1992-1994 – RFIC, Motorola Land Mobile Products Sector, LMPS**
  - Low Power IF processing for Direct Digital Transceivers, $100K,
- **1993 – Mixed-Signal IC, Hewlett-Packard**
  - Hewlett-Packard Faculty Chair position in Mixed-Signal IC, HP, $500K
- **1992-1993 - Faculty industry Fellowships, The National Science Foundation**
  - National Science Foundation, Motorola Inc. Faculty Industry Fellowship, $250K,
- **1992-1993 - Research Initiation Award (RIA) , The National Science Foundation**
  - National Science Foundation, Research Initiation Award (RIA) (same as current CAREER Award), Synthesis and Automatic Derivation of Multi-Rate VLSI Arrays for DSP Algorithms, $320K.
- **1988-1992 – Center for the Design of Analog/Digital IC's ( CDADIC)**
  - CDADIC, various projects on Low-Noise Source Coupled Logic (SCL), Mixed-Mode IC's, CDACIC $350K.
- **1988- Spectrum and time analyzers, Tektronix Inc.**
  - Decimation Filters for A/D Noise Enhancements, Tektronix, Inc., $100K,
- **1987-1993 – DARPA, MOSIS, Tektronix, IT, Motorola**
  - Various grants for IC Fabrication (DARPA/MOSIS, VLSI)
  - Testing equipment (Tek, HP)
  - DSP system development (TI, Motorola)

## PROFESSIONAL RECOGNITION

- IEEE Fellow, 2004-Present
- IEEE Fellow Committee Chair, CAS, 2008-2010
- IEEE Fellow Committee member, 2007-2010.
- IEEE Senior Member, 1993-Present, IEEE Member 1987-1992.
- IEEE Faculty Advisor, Oregon State University, 1987-1990

### IEEE Editorials

- IEEE Microwave Magazine, Editor,
- IEEE System Journal, Associate Editor, 2010-2011.
- IEEE Transactions on VLSI, Associate Editor, Jan 2001-2008.

- IEEE Communication Magazine, Editor, Feature Issues on "Circuits for Wireless and Wireline Communications," April 1999.
- IEEE Transactions on Microwave Theory and Techniques , editor, Special Issue on: "Radio Frequency IC Design," Dec. 1998.
- IEEE Transactions on Circuits and Systems-II, editor, Special Issue on: "Low-Power Wireless Communication Systems," June 1997.
- Associate Editor, IEEE Transactions on Circuits and Systems-II, 1993-1996.
- *Editor and Reviewer for many IEEE journals and conferences*
- *Founding member of IEEE RF Integrated Circuits Symposium*
- *Associate Editor, IEEE Communications, Tutorial & Surveys Magazine, 2006-2009.*

**Conference Organizations**

- RFIC Executive Committee members, 2000-2017
- RFIC Steering Committee Member, RFIC symposium, 1996-2017.
- RFIC Founding member, 1995-96.
- Technical Program Chair, IEEE International Sym. on Circuits and Systems, Phoenix, AZ, 2002.
- ISSCC Admin Council, Conferences Committee 2000-2005.
- General Chair, Radio Frequency IC (RFIC) Symposium, Seattle, WA, 2002.
- Technical Program Chair, RFIC Symposium, Phoenix, AZ, 2001.
- Finance Chair, RFIC symposium, Boston, MA, 2000.
- Publicity Chair, RFIC symposium, Los Angeles, CA, 1999.
- Transactions Chair, RFIC symposium, Baltimore, MD, 1998.
- General Chair, Int. Sym. on Low-Power Electronics and Design (ISLPED), Bio-Sensors, Monterey, CA, 97.
- Executive Committee Member, Int. Symp. On Low-Power Electronics and Design, 96-2000.
- Technical Program Committee Member of the following conferences:
  - International Conference on Circuits and Systems: 1996, 2000, 2001, 2004-2008
  - RFIC Symposium, 1996-2018
  - Application Specific Array Processing (ASAP): 2000-2002
  - Technical Program Chair, Int. Sym. on Low-Power Electronics and Design, Monterey, CA, 96.
  - Arizona Telecom Comm (ATIC)
  - GLS VLSI 1998, Lafayette, Louisiana, 1998
  - VLSI Design 98, Chennai, India, Jan. 1998.
  - ICECS, Lisbon, Portugal, 98.
  - Application Specific Array Processing, 1995-97, 2000
  - Vehicular Technology Conference, 1995-97.

- Inter. Conf. on Intelligent Information Systems, D.C., 1994-95.
- IEEE Pacific Rim Conference on Communications & Computers, Victoria, BC, Canada, 1991.

**Invited talks, Panelist, Session Chairs, Workshop Speaker**

- Conference chair, Technical Program committee chair and TPC member, tutorials, workshops, session chair, etc. in RFIC, ISSCC, ISCAS,VLSI, ICASSP, Low-Power Symposium, ICC, Application Specific IC's, IMS, MTT, etc.

**CONSULTANT**

- Medtronic's, Analog bio-sensors, MICS, 2005.
- Intel Inc. Chandler, AZ, 2002-2006: Development of 3G-4G Wireless transceiver.
- Sony Inc., San Diego, CA and Tokyo, Japan, 2002-2004: Review and development of various telecom cellular system architecture including 3G system architecture, and GPS system.
- Motorola Inc. 2002-2005: Supporting development of BT, WiFi, E911, GPS integrated circuits and systems for the cellular and mobile handsets.
- Hewlett Packard, Corvallis, OR – 1990-1993: Various project on development of custom analog and digital IC's for printer and inkjet system. Some of this work was under consultation, and some under various research grants with Oregon State University.
- Tektronix Inc, Beaverton, OR - 1988-1990: Design and Implementation of Data acquisition system for Spectrum analyzer, development of custom DSP algorithm for the Tektronix spectrum analyzer including system architecture, simulation, analysis, and design of oversampled data acquisition system.
- Boeing Commercial Aircraft, BCAC, Renton, WA - 1985-1987: Development of Airplane Controller Model, Simulation and Implementation of Flight control, Model reduction, and system control.

**EXPERT WITNESS (Patent, IP)**

Patent litigation, patent validity, infringement, IPR, expert reports, deposition, testimony, and trade secrets at ITC, District court, and USPTO in the following areas (Complete list of cases available):

- **Electronics:** Analog and Digital IC, Radio Frequency Integrated Circuits RFIC, Power Management, Battery Management, PMIC
- **Bioelectronics:** Bi-sensors, Glucose monitoring system, Heart monitoring systemHearing AID
- **Wireless communication**: 3G, 4G, 5G, OFDM, WiFi, 802.11, Bluetooth, Wireless LAN, Wi-Fi, 802.11, Bluetooth , ZIGBEE, Wireless Standards (ITU, ETSI, 3GPPP, LTE) including AMPS, GSM, CDMA, WCDMA, LTE, 1G, 2G, 3G, 4G, BT, WiFi (802.11), Satellite communications, Satellite Transceiver, ECHO and Multi-path cancelation
- **Wireline Communications**: MODEM, Digital Subscriber Line, ADSL, VDSL, MODEM, Wireline standards including DSL, MODEM and DOCIS, and related standards ITU/ETSI
- **GPS & Location:** GPS system, GPS receiver, location determination

# Dr. Sayfe Kiaei

**School of Electrical, Computer and Energy Engineering**
**Arizona State University, Tempe, AZ 85287**
**Sayfe@asu.edu**


- **MEMS:** MEMS, Bulk Acoustic Wave Filters, SAW, MEMS resonators, MEMS sensors, MEMS accelerometer
- **Signal processing & Communication:** Audio and acoustic signal processing, Audio Array processing, adaptive signal processing, Communication networks, Communication system

## PATENTS, PUBLICATIONS

### Patents and Patent Applications

| ID | title | assignee | inventor/author |
|---|---|---|---|
| AU-2003222007-A8 | Oscillator frequency correction in gps signal acquisition | Motorola Inc | Sayfe Kiaei, Thomas M King, George J Geier |
| WO-03093858-A3 | Oscillator frequency correction in gps signal acquisition | Motorola Inc | Thomas M King, George J Geier, Sayfe Kiaei |
| WO-2004048909-A3 | Compressed vector-based spectral analysis method and system for nonlinear rf blocks | Univ Arizona, Shahin Farahani, Sayfe Kiaei, Nazanin Darbanian | Shahin Farahani, Sayfe Kiaei, Nazanin Darbanian |
| US-2006226909-A1 | Monolithic supply-modulated rf power amplifier and dc-dc power converter ic | Siamak Abedinpour, Sayfe Kiaei | Siamak Abedinpour, Sayfe Kiaei |
| US-7218085-B2 | Integrated ZVS synchronous buck DC-DC converter with adaptive control | Arizona Board Of Regents | Siamak Abedinpour, Sayfe Kiaei |
| US-7372333-B2 | Monolithic supply-modulated RF power amplifier and DC-DC power converter IC | Arizona Board Of Regents, Acting For And On Behalf Of Arizona State Univers | Siamak Abedinpour, Sayfe Kiaei |
| US-7528754-B1 | Finite impulse response digital to analog converter | Arizona Board Of Regents | Bertan Bakkaloglu, Sayfe Kiaei, Shahin Taleie |
| US-2018049703-A1 | Wireless in-shoe physical activity monitoring | Timothy W. Markison, Sayfe Kiaei, Gary McCoy | Timothy W. Markison, Sayfe Kiaei, Gary McCoy |
| US-10264996-B2 | Method and apparatus for wirelessly monitoring repetitive bodily movements | Sayfe Kiaei | Sayfe Kiaei |
| US-2019231226-A1 | Method and apparatus for wirelessly monitoring repetitive bodily movements | Sayfe Kiaei | Sayfe Kiaei |
| US-10653337-B2 | Local object detection system | Timothy W. Markison, Sayfe Kiaei, Gary McCoy | Timothy W. Markison, Sayfe Kiaei, Gary McCoy |
| US-2020266708-A1 | Electronic circuit and method of controlling three-level switching converters | Arizona Board Of Regents On Behalf Of Arizona State University | Parisa Mahmoudidaryan, Sayfe Kiaei, Bertan Bakkaloglu |
| US-11108325-B2 | Electronic circuit and method of controlling three-level switching converters | Arizona Board Of Regents On Bbehalf Of Arizona State University | Parisa Mahmoudidaryan, Sayfe Kiaei, Bertan Bakkaloglu |
| US11129547B2 | Wireless in-shoe physical activity monitoring | Sigmasense LLC | Timothy W. Markison, Sayfe Kiaei, Gary McCoy |

### Standards Contributions

1. "Spectral Compatibility of ADSL: Frequency Overlap vs. FDM," T1E1, Dec. 97.
2. "Echo Cancellation for G.Lite Universal ADSL," OFDM, Universal ADSL Working Group, Atlanta, GA, Jan 98.
3. "8-bit QAM Constellation effects on reach for universal ADSL," OFDM, Universal ADAL Working Group, Atlanta, GA, Jan 98.
4. "Trellis Code Modulation coding gain for OFDM," Universal ADSL Working Group, Atlanta, GA, Jan 98.
5. "Monte Carlo Modeling and simulation of twisted pair wiring for OFDM," Universal ADAL Working Group, Atlanta, GA, Jan 98.
6. "Overlap Upstream/Downstream spectral allocation for OFDM ADSL ," International Telecommunication Unit, Chicago, March 98.
7. "Echo Cancellation for ADSL OFDM," International Telecommunication Unit, Antwerp, Belgium, 98.
8. "Performance of Echo Cancellation ADSL in OFDM system in the presence of Near End Cross Talk (NEXT)," International Telecommunication Unit, Honolulu, Hawaii, June 98.
9. Presentations and editorials at various XDSL and OFDM standards: ITU, ETSI, UAWG, and T1E1, 97-99.
10. Presentations and editorials at various 3G and 4G and wireless standards including ITU, 3GPPP, 802.11, BT,

### Books

"Design, Modeling and Testing of Data Converters, P Carbone, S Kiaei," F Xu - 2014 – Springer, © Springer-Verlag Berlin Heidelberg 2014

### Refereed Journal Papers




IPR2024-01050
Apple EX1003 Page 166

**Dr. Sayfe Kiaei**
**School of Electrical, Computer and Energy Engineering**
**Arizona State University, Tempe, AZ 85287**
**Sayfe@asu.edu**

1. CMOS Full-Duplex Mixer-First Receiver With Adaptive Self-Interference Cancellation S. -A. Ayati; A. Alizadeh; S. Kiaei, IEEE Transactions on Circuits and Systems I, Jan 2021.
2. A 10-W X-Ban Class-F High-Power Amplifier in a 0.25m GaAs pHEMT Technology, A. Alizadeh; M. Yaghoobi; M. Meghdadi; A. Medi; S. Kiaei, IEEE Transactions on Microwave Theory and Techniques, Jan 2021.
3. An X-Band Class-J Power Amplifier With Active Load Modulation to Boost Drain Efficiency A. Alizadeh; S. Hassanzadehyamchi; A. Medi; S. Kiaei, IEEE Transactions on Circuits and Systems I: Sep 2020
4. In-Field Recovery of RF Circuits from Wearout Based Performance Degradation D. Chang; J. N. Kitchen; S. Kiaei; S. Ozev, IEEE Transactions on Emerging Topics in Computing, Jun 2020
5. A 50-V Isolation, 100-MHz, 50-mW Single-Chip Junction Isolated DC-DC Converter With Self-Tuned Maximum Power Transfer Frequency, C. Liu; D. Mandal; Z. Yao; M. Sun; J. Todsen; B. Johnson; S. Kiaei; B. Bakkaloglu, IEEE Transactions on Circuits and Systems II: Express Brief, May 2019
6. Wideband Hybrid Envelope Tracking Modulator With Hysteretic-Controlled Three-Level Switching Converter and Slew-Rate Enhanced Linear Amplifier, P. Mahmoudidaryan; D. Mandal; B. Bakkaloglu; S. Kiaei, IEEE Journal of Solid-State Circuits, 2019.
7. Low-Power/Low-Voltage Integrated CMOS Sense Resistor-Free Analog Power/Current Sensor Compatible With High-Voltage Switching DC-DC Converter, S. Singh; D. Mandal; B. Bakkaloglu; S. Kiaei IEEE Transactions on Circuits and Systems I, 2019
8. Adaptively Biased Output Cap-Less NMOS LDO With 19 ns Settling Time, D. Mandal; C. Desai; B. Bakkaloglu; S. Kiaei, IEEE Transactions on Circuits and Systems II: Express Briefs, 2019
9. Chirag Desai; Debashis Mandal; Bertan Bakkaloglu; Sayfe Kiaei, "A 1.66 mV FOM Output Cap-Less LDO With Current-Reused Dynamic Biasing and 20 ns Settling Time," IEEE Solid-State Circuits Letters Year: 2018, Volume: 1, Issue: 2, Pages: 50-53
10. Debashis Mandal ; Chirag Desai ; Bertan Bakkaloglu ; Sayfe Kiaei, Adaptively Biased Output Cap-Less NMOS LDO with 19 ns Settling-Time;; IEEE Transactions on Circuits and Systems II: Feb 2019
11. Ayati, Mandal, Bakkaloglu, Kiaei, "Integrated Quasi-Circulator With RF Leakage Cancellation for Full-Duplex Wireless Transceivers,", IEEE Trans of Microwave theory and techniques, Dec 2017.
12. "A 50-mA 99.2% Peak Current Efficiency, 250-ns Settling Time Digital Low-Dropout Regulator With Transient Enhanced PI Controller", ChaiYong Lim ; Debashis Mandal ; Bertan Bakkaloglu ; Sayfe Kiaei; IEEE Transactions on Very Large Scale Integration (VLSI) Systems; Year: 2017, Volume: 25, Issue: 8; Pages: 2360 - 2370
13. Doohwang Chang; Jennifer N. Kitchen; Sayfe Kiaei; "Sule Ozev, In-field Recovery of RF Circuits from Wearout Based Performance Degradation", IEEE Transactions on Emerging Topics in Computing, 2017.
14. Edgar Martí-Arbona; Debashis Mandal; Bertan Bakkaloglu; Sayfe Kiaei, A High-Voltage-Compliant Current-to-Digital Sensor for DC–DC Converters in Standard CMOS Technology, IEEE Transactions on Power Electronics, 2017, Volume: 32, Issue: 3. Pp. 2180 - 2188
15. Michael Cheah ; Debashis Mandal ; Bertan Bakkaloglu ; Sayfe Kiaei, "A 100-mA, 99.11% Current Efficiency, 2-mVpp Ripple Digitally Controlled LDO With Active Ripple Suppression", Aug 2016.
16. Marti-Arbona, E.; Mandal, D.; Bakkaloglu, B.; Kiaei, S., "A High-Voltage Compliant Current-to-Digital Sensor for DC-DC Converters in Standard CMOS Technology," *IEEE Transactions on Power Electronics,* no. 99, 2016.
17. Chang, D.; Kitchen, J.N.; Bakkaloglu, B.; Kiaei, S.; Ozev, S., "Monitor-Based In-Field Wearout Mitigation for CMOS LC Oscillators," in *IEEE Transactions on Device and Materials Reliability*, vol. 16, no. 2, pp. 183-193, 2016.
18. Chang, D.; Kitchen, J.N.; Bakkaloglu, B.; Kiaei, S.; Ozev, S., "Design-Time Reliability Enhancement Using Hotspot Identification for RF Circuits," in *IEEE transactions on Very Large Scale Integration (VLSI) Systems,* -vol. 24, no. 3, pp. 1179-1183, 2016
19. Seungkee Min; Copani, T.; Kiaei, S.; Bakkaloglu, B., "A 90-nm CMOS 5-GHz Ring-Oscillator PLL With



IPR2024-01050
Apple EX1003 Page 167

Delay-Discriminator-Based Active Phase-Noise Cancellation," *Solid-State Circuits, IEEE Journal of* , vol.48, no.5, pp.1151,1160, May 2013

20. Junghan Lee; Tino Copani; Terry Mayhugh Jr.; Bhaskar Aravind; Sayfe Kiaei; Bertan Bakkaloglu.;, "A 280 mW, 0.07% THD+N class-D audio amplifier using a frequency-domain quantizer," *Analog Integrated Circuits and Signal Processing*, 173-186, 2012.
21. Seungkee Min; Copali, T.; Kiaei, S.; Bakkaloglu, B.; , "A 90nm CMOS 5GHz ring oscillator PLL with delay-discriminator based active phase noise cancellation," *Radio Frequency Integrated Circuits Symposium (RFIC), 2012 IEEE*, pp. 173-176, 2012
22. Deligoz, I.; Naqvi, S.R.; Copani, T.; Kiaei, S.; Bakkaloglu, B.; Sang-Soo Je; Junseok Chae; , "A MEMS-Based Power-Scalable Hearing Aid Analog Front End," *Biomedical Circuits and Systems, IEEE Transactions on* , vol.5, no.3, pp.201-213, June 2011
23. Copani, T.; Seungkee Min; Shashidharan, S.; Chakraborty, S.; Stevens, M.; Kiaei, S.; Bakkaloglu, B.; , "A CMOS Low-Power Transceiver With Reconfigurable Antenna Interface for Medical Implant Applications," *Microwave Theory and Techniques, IEEE Transactions on* , vol.59, no.5, pp.1369-1378, May 2011
24. Khalil, W.; Shashidharan, S.; Copani, T.; Chakraborty, S.; Kiaei, S.; Bakkaloglu, B.; , "A $700\text{-}\mu\text{A}$ 405-MHz All-Digital Fractional- $N$ Frequency-Locked Loop for ISM Band Applications," *Microwave Theory and Techniques, IEEE Transactions on* , vol.59, no.5, pp.1319-1326, May 2011
25. Lashkarian, N.; Nassiri-Toussi, K.; Jula, P.; Kiaei, S.; , "Performance Bound on Ergodic Capacity of MIMO Beam-Forming in Indoor Multi-Path Channels," *Communications, IEEE Transactions on* , vol.58, no.11, pp.3254-3264, November 2010
26. Hyungseok Kim; Junghan Lee; Copani, T.; Bazarjani, S.; Kiaei, S.; Bakkaloglu, B.; , "Adaptive Blocker Rejection Continuous-Time $\Sigma\Delta$ ADC for Mobile WiMAX Applications," *Solid-State Circuits, IEEE Journal of* , vol.44, no.10, pp.2766-2779, Oct. 2009
27. Kitchen, J.N.; Chu, C.; Kiaei, S.; Bakkaloglu, B.; , "Combined Linear and $\Delta$ -Modulated Switch-Mode PA Supply Modulator for Polar Transmitters," *Solid-State Circuits, IEEE Journal of* , vol.44, no.2, pp.404-413, Feb. 2009
28. Sang-Soo Je; Rivas, F.; Diaz, R.E.; Jiuk Kwon; Jeonghwan Kim; Bakkaloglu, B.; Kiaei, S.; Junseok Chae; , "A Compact and Low-Cost MEMS Loudspeaker for Digital Hearing Aids," *Biomedical Circuits and Systems, IEEE Transactions on* , vol.3, no.5, pp.348-358, Oct. 2009
29. Taleie, S.M.; Copani, T.; Bakkaloglu, B.; Kiaei, S.; , "A Linear Digital IF to RF SD DAC Transmitter With Embedded Mixer," *Microwave Theory and Techniques, IEEE Transactions on* , vol.56, no.5, pp.1059-1068, May 2008
30. Wing-Yee Chu; Bakkaloglu, B.; Kiaei, S.; , "A 10 MHz Bandwidth, 2 mV Ripple PA Regulator for CDMA Transmitters," *Solid-State Circuits, IEEE Journal of* , vol.43, no.12, pp.2809-2819, Dec. 2008.
31. Lyles, U. J.; Copani, T.; Bakkaloglu, B.; Kiaei, S.; , "An Injection-Locked Frequency-Tracking ΣΔ Direct Digital Frequency Synthesizer," *Circuits and Systems II: Express Briefs, IEEE Transactions on* , vol.54, no.5, pp.402-406, May 2007
32. Khalil, W.; Bakkaloglu, B.; Kiaei, S.; , "A Self-Calibrated On-Chip Phase-Noise Measurement Circuit With −75 dBc Single-Tone Sensitivity at 100 kHz Offset," *Solid-State Circuits, IEEE Journal of* , vol.42, no.12, pp.2758-2765, Dec. 2007
33. Chen, X.; Kiaei, S.; , "Pulse generation scheme for low-power low-complexity impulse ultra-wideband," *Electronics Letters* , vol.43, no.1, pp.44-45, Jan. 4 2007
34. Carlosena, A.; Wing-Yee Chu; Bakkaloglu, B.; Kiaei, S.; , "Randomized Carrier PWM With Exponential Frequency Mapping," *Power Electronics, IEEE Transactions on* , vol.22, no.3, pp.960-966, May 2007
35. Abedinpour, S.; Bakkaloglu, B.; Kiaei, S.; , "A Multistage Interleaved Synchronous Buck Converter With Integrated Output Filter in 0.18 µm SiGe Process," *Power Electronics, IEEE Transactions on* , vol.22, no.6, pp.2164-2175, Nov. 2007

36. Kitchen, J. N.; Deligoz, I.; Kiaei, S.; Bakkaloglu, B.; , "Polar SiGe Class E and F Amplifiers Using Switch-Mode Supply Modulation," *Microwave Theory and Techniques, IEEE Transactions on* , vol.55, no.5, pp.845-856, May 2007
37. A Multistage Interleaved Synchronous Buck Converter With Integrated Output Filter in 0.18 micron. , S Abedinpour, B Bakkaloglu, S Kiaei - Power Electronics, IEEE Transactions on, Nov. 2007, Volume: 22, pp - 2164-2175
38. Delta-sigma (ΔΣ) frequency synthesizers for wireless applications - B Bakkaloglu, S Kiaei, B Chaudhuri - Computer Standards & Interfaces, 2007 – Elsevier, Analog Computer Standards & Interfaces Volume 29, Issue 1 , January 2007, Pages 19-30
39. Pulse generation scheme for low-power low-complexity impulse ultra-wideband, Chen, X.; Kiaei, S.; Electronics Letters; Volume: 43 Issue: 1 Jan. 2007 ; Page(s): 44-45
40. Bandwidth extension technique for polar modulated RF transmitters ; Bakkaloglu, B.; Kiaei, S.; Dwyer, R.; Electronics Letters; Volume: 42 Issue: 8 13 April 2006 ; Page(s): 476- 478 ;
41. Frequency modulated bandpass SD chirp synthesizer for sensor applications; Chung, H.H.; Lyles, U.; Copani, T.; Bakkaloglu, B.; Kiaei, S.; Electronics Letters; Volume: 42 Issue: 16 August 3, 2006 ; Page(s): 917- 918
42. Radiation Hardened by Design RF Circuits Implemented in 0.13 mm CMOS Technology; Chen, W.; Pouget, V.; Gentry, G. K.; Barnaby, H. J.; Vermeire, B.; Bakkaloglu, B.; Kiaei, K.; Holbert, K. E.; Fouillat, P. ; Nuclear Science, IEEE Transactions on ; Volume: 53 Issue: 6 Part=1, Dec. 2006 ; Page(s): 3449-3454 ;
43. Analysis of Single Events Effects on Monolithic PLL Frequency Synthesizers ; Chung, H. H.; Chen, W.; Bakkaloglu, B.; Barnaby, H. J.; Vermeire, B.; Kiaei, S. ; Nuclear Science, IEEE Transactions on ; Volume: 53 Issue: 6 Part=1, Dec. 2006 ; Page(s): 3539-3543
44. Pulse generation scheme for low-power low-complexity impulse ultra-wideband
45. Chen, X.; Kiaei, S.; Electronics Letters; Volume: 43 Issue: 1 Jan. 4 2007; Page(s): 44-45
46. Bandwidth extension technique for polar modulated RF transmitters ; Bakkaloglu, B.; Kiaei, S.; Dwyer, R.; Electronics Letters; Volume: 42 Issue: 8 13 April 2006 ; Page(s): 476- 478 ;
47. Frequency modulated bandpass SD chirp synthesizer for sensor applications; Chung, H.H.; Lyles, U.; Copani, T.; Bakkaloglu, B.; Kiaei, S.; Electronics Letters; Volume: 42 Issue: 16 August 3, 2006 ; Page(s): 917- 918
48. Radiation Hardened by Design RF Circuits Implemented in 0.13 mm CMOS Technology; Chen, W.; Pouget, V.; Gentry, G. K.; Barnaby, H. J.; Vermeire, B.; Bakkaloglu, B.; Kiaei, K.; Holbert, K. E.; Fouillat, P. ; Nuclear Science, IEEE Transactions on ; Volume: 53 Issue: 6 Part=1, Dec. 2006 ; Page(s): 3449-3454 ;
49. Analysis of Single Events Effects on Monolithic PLL Frequency Synthesizers ; Chung, H. H.; Chen, W.; Bakkaloglu, B.; Barnaby, H. J.; Vermeire, B.; Kiaei, S. ; Nuclear Science, IEEE Transactions on ; Volume: 53 Issue: 6 Part=1, Dec. 2006 ; Page(s): 3539-3543
50. *"Channel Shortening For Discrete Multi-tone Transceivers To Maximize Channel Capacity" OFDM and DSL, G. Arslan, B. Evans, S. Kiaei; ; IEEE Transactions for Signal Processing, Vol 49; No. 12; Pp: 3123-3135. Dec 2001.*
51. *Optimum equalization of multicarrier systems: a unified geometric approach, for OFDM Lashkarian, N.; Kiaei, S. ; IEEE Transactions on Communications, Volume: 49 Issue: 10 , Oct. 2001 Page(s): 1762 –1769*
52. *Class of cyclic-based estimators for frequency-offset estimation of OFDM systems; Lashkarian, N.; Kiaei, S. , IEEE Transactions on Communications , Volume: 48 Issue: 12 , Jan 2001; Page(s): 2139 –2149*
53. *Systems and circuits for broadband communications; Kiaei, S. IEEE Communications Magazine , Volume: 37 Issue: 4 , April 1999 Page(s): 70 –70*
54. *Westgate, C.R.; Gupta, R.K.; Kiaei, S. ; Microwave Theory and Techniques, IEEE Transactions on , Volume: 46 Issue: 12 Part: 2 , Dec. 1998 ; Page(s): 2180 –2181*

55. *Introduction to the special issue on low power wireless communications Kiaei, S.; Friedman, E.G. Circuits and Systems II: IEEE Transactions on Analog and Digital Signal Processing, Volume: 44 Issue: 6 , June 1997 Page(s): 425 –427*
56. *Adaptive multiuser detector for asynchronous DS-CDMA in Rayleigh fading; Dutta, A.K.; Kiaei, S. , IEEE Transactions on Circuits and Systems II: Analog and Digital Signal Processing, Volume: 44 Issue: 6 , June 1997; Page(s): 468 -472*
57. "Noise Considerations for Mixed-Signal RF IC Transceivers," ACM Transaction on Wireless Networks, Vol. 4, pp. 41-53, 1998. [S. Kiaei, D. Allstot, N. Verghese, K. Hansen].
58. "A triangularly weighted zero-crossing detector providing delta-sigma frequency-to-digital conversion", *IEE Electronics Letters*, vol.33, no.13, pp.1121-1122, June 1997. [M. Hovin, S. Kiaei, T.S. Laude]
59. "Adaptive Multi-user Detector For Asynchronous DS- CDMA In Raleigh Fading," IEEE Transactions on CAS-II, pp. 468-473, June 97. [A.K. Dutta, S. Kiaei]
60. "Multi-Rate Transformation of Recurrence Equations for Regular VLSI Arrays, " Application Specific Array Processors, IEEE Press, 1994. [L. Aihua, S. Kiaei]
61. "Analog Logic Techniques," IEEE Circuits and Devices Magazine, pp. 12-21, May 1993. [S. Kiaei, D. Allstot, R. Zele]
62. "Overlapping Transformation for Time-Area Optimal VLSI arrays for Toeplitz Matrices," J. of Computer and Software Engineering, Vol. 3, #4, pp. 461-481, June 95. [S. Kiaei, Yuepeng Zheng]
63. "Characterization and Comparison of CMOS FSCL Circuits with Conventional CMOS Logic for Hybrid ICs," IEEE Trans. on Circuits and Systems, Sept. 93. [S.H. Chee, S. Kiaei, D. Allstot]
64. "Low Noise Logic for Mixed-Mode VLSI Circuits, Journal of microelectronics, " Vol. 23, No. 2, pp. 103-115, April 1992. [S. Kiaei, D. Allstot]
65. "Enhancement Source-Couple Logic ESCL," IEEE Trans. on Circuits, and Systems II: Analog and Digital Signal Processing, Vol. 39, No. 6, pp. 399-402, July92. [M. Maleki, S. Kiaei]
66. "Synthesis of Complex FSCL Blocks for Mixed Mode Systems," IEEE J. Solid State Circuits, Vol. 27, No. 8, pp. 1157-1168, Aug 1992. [S. Maskai, S. Kiaei, D. Allstot]
67. "Adaptive self-correcting D-S Modulators," IEE Electronics Letters, Vol. 28, No. 14, pp. 1288-1290, July 92. [S. Abdenadher, S. Kiaei, G. Temes, R. Schreier]
68. "On-line Adaptive Digital Correction of Dual-Quantization Delta-Sigma Modulators," IEE Electronics Letters, Vol. 28, No. 16, pp. 1511-1513, July 92.[Y. Yang, R. Schreier, G. Temes, S. Kiaei]
69. "Piecewise Linear Schedules for Recurrence Equations," VLSI Sig. Proc. VI, IEEE Press, 1992. [S. Rajopadhye, L. Mui, S. Kiaei]
70. "Automatic Synthesis and Derivations of VLSI Architectures for Recursive IIR Digital Filters," CAD for VLSI Design, 1990. [S. Kiaei, S. Rajopadhye]
71. "VLSI Design of Wavefront Array Processors for Recursive Filters," VLSI Signal Processing II, IEEE Press, pp. 152-164, 1988. [S. Kiaei, U.B. Desai]
72. "RFIC Design," IEEE Transactions on Microwave Theory and Techniques, v. 46, pp. 2180-2183, Dec. 98. [S. Kiaei, R. Gupta]
73. "Circuits for Wireless and Wireline Communications," IEEE Comm. Magazine, April 1999. [S. Kiaei]

**Dr. Sayfe Kiaei**
**School of Electrical, Computer and Energy Engineering**
**Arizona State University, Tempe, AZ 85287**
**Sayfe@asu.edu**

**Conference Publications**

1. " Switching Battery Charger with Cascaded Two Loop Control Using Time-Based Techniques,". ChaiYong Lim; Debashis Mandal; Bertan Bakkaloglu; Sayfe Kiaei, Published in: 2021 IEEE Applied Power Electronics Conference and Exposition (APEC), June 2021
2. 27.5 A 91%-Efficiency Envelope-Tracking Modulator Using Hysteresis-Controlled Three-Level Switching Regulator and Slew-Rate-Enhanced Linear Amplifier for LTE-80MHz Applications P. Mahmoudidaryan; D. Mandal; B. Bakkaloglu; S. Kiaei, 2019 IEEE International Solid- State Circuits Conference - (ISSCC), 2019
3. Integrated High-Efficiency Single-Inductor CCM Boost Converter for Multi-Junction PV Energy Harvesting, Q. Peng; D. Mandal; P. Mahmoudidaryan; B. Bakkaloglu; S. Kiaei, 2019 IEEE Applied Power Electronics Conference and Exposition (APEC), 2019
4. Sense resistor-free analog power sensor for boost converter with 14.1% gain error and 9.4% offset error, Shrikant Singh ; Debashis Mandal ; Bertan Bakkaloglu ; Sayfe Kiaei; 2018 IEEE 9th Latin American Symposium on Circuits & Systems (LASCAS), 2018
5. Ayati, S. A.; Mandal, D.; Bakkaloglu, B.; Kiaei, S., "Adaptive Integrated CMOS Circulator," in *IEEE Symposium on Radio Frequency Integrated Circuits (RFIC)*, May 2016
6. Khunti, H.; Krehbiel, J.; Cheah, M.; Bakkaloglu, B.; Kiaei, S., "SSB transceiver for vital sign detection," in *IEEE Biomedical Circuits and Systems Conference (BioCAS)*, Oct. 2015.
7. Marti-Arbona, E.; Mandal, D.; Bakkaloglu, B.; Kiaei, S., "Low power integrated on-chip current to digital converter," in *Applied Power Electronics Conference and Exposition (APEC), March 2015*
8. Marti-Arbona, E.; Mandal, D.; Bakkaloglu, B.; Kiaei, S., "PV panel power optimization using MPPT," in *Applied Power Electronics Conference and Exposition (APEC), March 2015*
9. Chang, D.; Ozev, S.; Bakkaloglu, B.; Kiaei, S.; Afacan, E.; Dundar, G., "Reliability enhancement using in-field monitoring and recovery for RF circuits," in *VLSI Test Symposium (VTS), 2014*
10. Deng, Lingfei; Kundur, Vinay; Naga, Naveen Sai Jangala; Ozel, Muhlis Kenan; Yilmaz, Ender; Ozev, Sule; Bakkaloglu, Bertan; Kiaei, Sayfe; Pratab, Divya; Dar, Tehmoor, "Electrical calibration of spring-mass MEMS capacitive accelerometers," *Design, Automation & Test in Europe Conference & Exhibition (DATE), 2013* , vol., no., pp.571,574, 18-22 March 2013
11. Kiaei, M.S.; Fouli, K.; Scheutzow, M.; Maier, M.; Reisslein, M.; Assi, C., "Delay analysis for ethernet long-reach passive optical networks," *Communications (ICC), 2012 IEEE International Conference on* , vol., no., pp.3099,3104, 10-15 June 2012
12. Marti-Arbona, Edgar; Bakkaloglu, Bertan; Kiaei, Sayfe, "Ultra-Low Power Current-to-Digital Sensor for Switching DC-DC Converters," *Ph.D. Research in Microelectronics and Electronics (PRIME), 2012 8th Conference on* , vol., no., pp.1,4, 12-15 June 2012
13. Seungkee Min; Copani, T.; Kiaei, S.; Bakkaloglu, B., "A 90nm CMOS 5GHz ring oscillator PLL with delay-discriminator based active phase noise cancellation," *Radio Frequency Integrated Circuits Symposium (RFIC), 2012 IEEE* , vol., no., pp.173,176, 17-19 June 2012
14. A fully integrated pulsed-LASER time-of-flight measurement system with 12ps single-shot precision; Copani, T.; Vermeire, B.; Jain, A.; Karaki, H.; Chandrashekar, K.; Goswami, S.; Kitchen, J.; Chung, H.H.; Deligoz, I.;



IPR2024-01050
Apple EX1003 Page 171

Bakkaloglu, B.; Barnaby, H.; Kiaei, S.; Custom Integrated Circuits Conference, 2008. CICC 2008. IEEE; 21-24 Sept. 2008. 359-362.

15. A Self-Calibrated On-chip Phase-Noise-Measurement Circuit with -75dBc Single-Tone Sensitivity at 100kHz Offset. Khalil, W.; Bakkaloglu, B.; Kiaei, S. Solid-State Circuits Conference, 2007. ISSCC 2007. Digest of Technical Papers. IEEE International. 11-15 Feb. 2007. 546-621.
16. Supply modulators for RF polar transmitters. Kitchen, J.; Chu, C.; Kiaei, S.; Bakkaloglu, B. Radio Frequency Integrated Circuits Symposium, 2008. RFIC 2008. IEEE. June 17 2008-April 17 2008. 417-420.
17. A 700uA, 405MHz fractional-N All digital frequency-locked loop for MICS band applications. Shashidharan, S.; Khalil, W.; Chakraborty, S.; Kiaei, S.; Copani, T.; Bakkaloglu, B. Radio Frequency Integrated Circuits Symposium (RFIC), 2010 IEEE. 23-25 May 2010. 409-412.
18. A 14-GHz CMOS receiver with local oscillator and IF bandpass filter for satellite applications. Wenjian Chen; Copani, T.; Barnaby, H.J.; Kiaei, S. Radio Frequency Integrated Circuits Symposium, 2009. RFIC 2009. IEEE. 7-9 June 2009. 123-126.
19. (Invited) analysis and modeling of noise folding and spurious emission in wideband fractional-N synthesizers. Khalil, W.; Hedayati, H.; Bakkaloglu, B.; Kiaei, S. Radio Frequency Integrated Circuits Symposium, 2008. RFIC 2008. IEEE. June 17 2008-April 17 2008. 291-294.
20. Combined Linear and Î”-Modulated Switched-Mode PA Supply Modulator for Polar Transmitters. Kitchen, J.; Wing-Yee Chu; Deligoz, I.; Kiaei, S.; Bakkaloglu, B. Solid-State Circuits Conference, 2007. ISSCC 2007. Digest of Technical Papers. IEEE International. 11-15 Feb. 2007. 82-588.
21. A 24GHz CMOS digitally modulated polar power amplifier with embedded FIR filtering. Hyungseok Kim; Copani, T.; Kiaei, S. Ph.D. Research in Microelectronics and Electronics (PRIME), 2010 Conference on. 18-21 July 2010. 1-4.
22. A 0.18Î¼m CMOS fully integrated RFDAC and VGA for WCDMA transmitters. Taleie, S.M.; Yongping Han; Copani, T.; Bakkaloglu, B.; Kiaei, S. Radio Frequency Integrated Circuits Symposium, 2008. RFIC 2008. IEEE. June 17 2008-April 17 2008. 157-160.
23. A 96Gb/s-Throughput Transceiver for Short-Distance Parallel Optical Links. Goswami, S.; Copani, T.; Jain, A.; Karaki, H.; Vermeire, B.; Barnaby, H.J.; Fetzer, G.; Vercillo, R.; Kiaei, S. Solid-State Circuits Conference, 2008. ISSCC 2008. Digest of Technical Papers. IEEE International. 3-7 Feb. 2008. 230-609.
24. A 0.13-Î¼m CMOS Ultra-Low Power Front-End Receiver for Wireless Sensor Networks. Wenjian Chen; Copani, T.; Barnaby, H.J.; Kiaei, S. Radio Frequency Integrated Circuits (RFIC) Symposium, 2007 IEEE. 3-5 June 2007. 105-108.
25. A low noise buck converter with a fully integrated continuous time Î£Î” modulated feedback controller. Wong, M.; Bakkaloglu, B.; Kiaei, S. Custom Integrated Circuits Conference, 2007. CICC '07. IEEE. 16-19 Sept. 2007. 377-380.
26. A 10MHz-Bandwidth 2mV-Ripple PA-Supply Regulator for CDMA Transmitters. Wing-Yee Chu; Bakkaloglu, B.; Kiaei, S. Solid-State Circuits Conference, 2008. ISSCC 2008. Digest of Technical Papers. IEEE International. 3-7 Feb. 2008. 448-626.
27. A Bandpass Î”Î£ DDFS-Driven 19GHz Frequency Synthesizer for FMCW Automotive Radar. Hoon Hee Chung; Lyles, U.; Copani, T.; Bakkaloglu, B.; Kiaei, S. Solid-State Circuits Conference, 2007. ISSCC 2007. Digest of Technical Papers. IEEE International. 11-15 Feb. 2007. 126-591.
28. A 2mW CMOS MICS-band BFSK transceiver with reconfigurable antenna interface. Seungkee Min; Shashidharan, S.; Stevens, M.; Copani, T.; Kiaei, S.; Bakkaloglu, B.; Chakraborty, S. Radio Frequency Integrated Circuits Symposium (RFIC), 2010 IEEE. 23-25 May 2010. 289-292.
29. A 14mW 5Gb/s CMOS TIA with gain-reuse regulated cascode compensation for parallel optical interconnects. Goswami, S.; Silver, J.; Copani, T.; Wenjian Chen; Barnaby, H.J.; Vermeire, B.; Kiaei, S. Solid-State Circuits Conference - Digest of Technical Papers, 2009. ISSCC 2009. IEEE International. 8-12 Feb. 2009. 100-101a.

30. A 0.13-Âµm CMOS local oscillator for 60-GHz applications based on push-push characteristic of capacitive degeneration. Copani, T.; Hyungseok Kim; Bakkaloglu, B.; Kiaei, S. Radio Frequency Integrated Circuits Symposium (RFIC), 2010 IEEE. 23-25 May 2010. 153-156.
31. A 90nm CMOS 5GHz ring oscillator PLL with delay-discriminator based active phase noise cancellation. Seungkee Min; Copani, T.; Kiaei, S.; Bakkaloglu, B. Radio Frequency Integrated Circuits Symposium (RFIC), 2012 IEEE. 17-19 June 2012. 173-176.
32. A BiCMOS voltage controlled oscillator and frequency doubler for K-band applications. Copani, T.; Bakkaloglu, B.; Kiaei, S. Radio Frequency Integrated Circuits Symposium, 2008. RFIC 2008. IEEE. June 17 2008-April 17 2008. 537-540.
33. Dynamic calibration of feedback DAC non-linearity for a 4<sup>th</sup> order CT sigma delta for digital hearing aids. Naqvi, S.R.; Deligoz, I.; Kiaei, S.; Bakkaloglu, B. SOC Conference (SOCC), 2011 IEEE International. 26-28 Sept. 2011. 109-113.
34. Ultra-Low Power Current-to-Digital Sensor for Switching DC-DC Converters. Marti-Arbona, Edgar; Bakkaloglu, Bertan; Kiaei, Sayfe. Ph.D. Research in Microelectronics and Electronics (PRIME), 2012 8th Conference on. 12-15 June 2012. 1-4.
35. Dynamic calibration of feedback DAC non-linearity for a 4$^{th}$ order CT sigma delta for digital hearing aids Naqvi, S.R.; Deligoz, I.; Kiaei, S.; Bakkaloglu, B. – 2011 IEEE International SOC Conference (SOCC), 2011
36. Ultra-Low Power Current-to-Digital Sensor for Switching DC-DC Converters Marti-Arbona, Edgar; Bakkaloglu, Bertan; Kiaei, Sayfe – 2012 8$^{th}$ Conference on Ph.D. Research in Microelectronics and Electronics (PRIME), 2012.
37. A Bandpass S-D DDFS-Driven 19GHz Frequency Synthesizer for FMCW Automotive Radar HH Chung, U Lyles, T Copani, B Bakkaloglu, S Kiaei - Solid-State Circuits Conference, 2007. ISSCC 2007.
38. A 0.13-micron CMOS Ultra-Low Power Front-End Receiver for Wireless Sensor Networks W Chen, T Copani, HJ Barnaby, S Kiaei - Radio Frequency Integrated Circuits (RFIC) Symposium, 2007,
39. A Self-Calibrated On-chip Phase-Noise-Measurement Circuit with -75dBc Single-Tone Sensitivity at 100kHz Offset, Khalil, W. Bakkaloglu, B. Kiaei, S. , Solid-State Circuits Conference, 2007. ISSCC 2007. Digest of Technical Papers. IEEE International, 11-15 Feb. 2007
40. Combined Linear and SD-Modulated Switched-Mode PA Supply Modulator for Polar Transmitters J Kitchen, WY Chu, I Deligoz, S Kiaei, - Solid-State Circuits Conference, 2007. ISSCC 2007. Digest of, 2007 - Solid-State Circuits Conference, 2007. ...
41. A Low Noise Buck Converter with a Fully Integrated Continuous Time SD Modulated Feedback Controller, M Wong, B Bakkaloglu, S Kiaei, F Semiconductor, AZ … - Custom Integrated Circuits Conference, 2007. CICC'07. IEEE, 2007
42. Tri-mode integrated receiver for GPS, GSM 1800, and WCDMA ; Darbanian, N.; Farahani, S.; Kiaei, S.; Bakkaloglu, B.; Smith, M.; Radio Frequency Integrated Circuits (RFIC) Symposium, 2006 IEEE ; 11-13 June 2006 ;
43. A low power bandpass ΣΔ modulator injection locked synthesizer ; Hoon Hee Chung; Lyles, U.; Copani, T.; Bakkaloglu, B.; Kiaei, S. ; Radio Frequency Integrated Circuits (RFIC) Symposium, 2006 IEEE; 11-13 June 2006
44. Linear RF polar modulated SiGe Class E and F power amplifiers ; Kitchen, J.D.; Deligoz, I.; Kiaei, S.; Bakkaloglu, B. ; Radio Frequency Integrated Circuits (RFIC) Symposium, 2006 IEEE ; 11-13 June 2006
45. Randomized carrier PWM with exponential frequency mapping; Carlosena, A.; Wing-Yee Chu; Bakkaloglu, B.; Kiaei, S. ;Circuits and Systems, 2006. ISCAS 2006. Proceedings. 2006 IEEE International Symposium on; 21-24 May 2006
46. A 65MHZ switching rate, two-stage interleaved synchronous buck converter with fully integrated output filter ; Abedinpour, S.; Bakkaloglu, B.; Kiaei, S. ; Circuits and Systems, 2006. ISCAS 2006. Proceedings. 2006 IEEE International Symposium on; 21-24 May 2006



IPR2024-01050
Apple EX1003 Page 173

47. A Multi-Stage Interleaved Synchronous Buck Converter with Integrated Output Filter in a 0.18/spl mu/ SiGe process ; Abedinpour, S.; Bakkaloglu, B.; Kiaei, S. ; Solid-State Circuits, 2006 IEEE International Conference Digest of Technical Papers; Feb. 6-9, 2006 ; Page(s): 1398- 1407
48. A Bandpass ΣΔ RF-DAC with Embedded FIR Reconstruction Filter ; Taleie, S.M.; Copani, T.; Bakkaloglu, B.; Kiaei, S. ; Solid-State Circuits, 2006 IEEE International Conference Digest of Technical Papers ; Feb. 6-9, 2006 ; Page(s): 2370- 2379
49. S. Kiaei, S. M. Taleie, B. Bakkaloglu, "Low-power high-Q NEMS receiver architecture", *IEEE International Symposium on Circuits and Systems*, Vol.5, 23-26 May 2005 Page(s):4401 - 4404
50. Kiaei, Overview of Transmit and Linear PA Up-converters, Vol 5, May 05; RFIC 2005, Workshops, PP. 28-45.
51. S. Kiaei, RF Design of Up and Down converters, S. Kiaei, Vol. 5, May 05, RF Building Blocks workshop, PP. 45-68. Location: Long Beach Convention Center, Room 102AB
52. S. Kiaei, IMS 2005, DC/DC converters and Noise Shaping Techniques for Switched-Mode DC/DC Converters for RF Transceivers, Vol. 5, May 05, Monilithic Power Management workshop, PP. 98-112.
53. Darbanian, N.; Kiaei, S.; Farahani, S.;, Optimum design and trade-offs for a triple-band LNA for GSM, WCDMA and GPS applications, SOC Conference, 2004. Proceedings. IEEE International , 12-15 Sept. 2004, PP 383-386
54. Xiaomin Chen; Kiaei, S.;, An improved delay-hopped transmitted-reference ultra wideband architecture, SOC Conference, 2004. Proceedings. IEEE International , 12-15 Sept. 2004, Pages:359 - 362
55. Taleie, S.M.; Jiandong Zhang; Kiaei, S.;, Nonlinearity and power consumption analysis of a low-IF MEMS receiver architecture, Circuits and Systems, 2004. MWSCAS '04. The 2004 47th Midwest Symposium on , Volume: 3 , July 25-28, 2004; Pages:III_363 - III_366
56. Kiaei, S.; Smith, M.;, Receiver design for 4G, Microwave Symposium Digest, 2004 IEEE MTT-S International , Volume: 1 , 6-11 June 2004, Pages:VI - VI
57. Badillo, D.A.; Kiaei, S.;, Comparison of contemporary CMOS ring oscillators, Radio Frequency Integrated Circuits (RFIC) Symposium, 2004. Digest of Papers. 2004 IEEE , 6-8 June 2004, Pages:281 - 284
58. Badillo, D.A.; Kiaei, S.;, A low phase noise 2.0 V 900 MHz CMOS voltage controlled ring oscillator, Circuits and Systems, 2004. ISCAS '04. Proceedings of the 2004 International Symposium on , Volume: 4 , 23-26 May 2004, Pages: IV - 533-6 Vol.4
59. Xuejin Wang; Aykut Dengi; Sayfe Kiaei;, A high IIP3 X-band BiCMOS mixer for radar applications, Circuits and Systems, 2004. ISCAS '04. Proceedings of the 2004 International Symposium on , Volume: 1 , 23-26 May 2004, Pages:I-113 - I-116 Vol.1
60. Shahin Farahani, Nazanin Darbanian, and Sayfe Kiaei, Simulation of Nonlinear Systems with Sparse Input Vectors Using CRC Techniques, Proceedings of 11th IEEE workshop on Digital Signal Processing, Aug 2004, NM, Vo I, PP VoI
61. Shahin Farahani, Nazanin Darbanian, and Sayfe Kiaei, AN EDUCATIONAL TOOL AND TEACHING GUIDELINES FOR NONLINEAR SYSTEMS WITH SPARSE INPUTS , Proceedings of 3rd IEEE workshop on Signal Processing for Education, Aug 2004, NM, Vol I, PP Vol L
62. Shahin Farahani, Nazanin Darbanian, and Sayfe Kiaei, Compressed Vector-Based Spectral Analysis Technique for Analysis and Simulation of Nonlinear Systems , Proceedings of IEEE Wireless and Microwave Technology Conference, Florida 2004 pp.45
63. Shahin Farahani, Nazanin Darbanian, Sayfe Kiaei, Ali Afsahi, Hang Song , A SiGe BiCMOS 0.18 Multi-Mode RF front-end for GSM 1.8, GPS, and WCDMA Applications, Proceedings of Software Define Radio technical conference, Phoenix, AZ 2004, Workshop Vol, Section III, PP 301-325
64. S. Farahani, N. Darbanian, S. Kiaei, , "Compressed Vector-Based Spectral Analysis Technique for RF Nonlinear Analysis and Simulation of Circuits and Systems", , 6TH IEEE Wireless and Microwave Technology Conference, Florida 2004, Section I, PP 40-45
65. N. Darbanian S. Farahani, A. Afsahi, H. Song, S. Kiaei, M. Smith, "A SiGe BiCMOS 0.18un Multi-Mode RF front-end for GSM 1.8, GPS, and WCDMA Applications" accepted for presentation in IEEE WAMI

conference, Florida 2004, 6TH IEEE Wireless and Microwave Technology Conference , Florida 2004,Section I, pp 45-49

66. S.M Taleie, J. Zhang, S. Kiaei, A New Low-IF Receiver using High-Q MEMS filter, 6TH IEEE Wireless and Microwave Technology Conference -Florida 2004, Section II, pp 90-95
67. S. Kiaei, S. M. Taleie, B. Bakkaloglu, "Low-power high-Q NEMS receiver architecture", *IEEE International Symposium on Circuits and Systems*, Vol.5, 23-26 May 2005 Page(s):4401 - 4404
68. Kiaei, Overview of Transmit and Linear PA Up-converters, Vol 5, May 05; RFIC 2005, Workshops, PP. 28-45.
69. S. Kiaei, RF Design of Up and Down converters, S. Kiaei, Vol. 5, May 05, RF Building Blocks workshop, PP. 45-68. Location: Long Beach Convention Center, Room 102AB
70. S. Kiaei, IMS 2005, DC/DC converters and Noise Shaping Techniques for Switched-Mode DC/DC Converters for RF Transceivers, Vol. 5, May 05, Monilithic Power Management workshop, PP. 98-112.
71. "A Bandpass Delta Sigma RF-DAC with Embedded FIR Reconstruction Filter," International Solid State Circuits Conference (ISSCC) 2006 [Taleie, S.M.; Copani, T.; Bakkaloglu, B.; Kiaei, S.]
72. "Compressed Vector-Based Spectral Analysis Technique for RF Nonlinear Analysis and Simulation of Circuits and Systems," Proc. of IEEE WAMI Conference, Clearwater, FL, June 2004. [S. Farahani, N. Darbanian, S. Kiaei]
73. "A SiGe BiCMOS 0.18un Multi-Mode RF front-end for GSM 1.8, GPS, and WCDMA Applications," Proc. of IEEE WAMI Conference, Clearwater, FL, June 2004. [N. Darbanian S. Farahani, A. Afsahi, H. Song, S. Kiaei, M. Smith]
74. "Delta-Sigma Data Converters for Wireless Applications," Proc. of 2003 International Workshop on ADC's, June 2003. [Chaudhuri, Bikram, Kiaei, S.]
75. "A Pseudo-Concurrent 0.18 /spl mu/m Multi-Band CMOS LNA," Proc. of 2003 IEEE MTT-S International, June 2003. [Lavasani, S.H.M.; Chaudhuri, B.; Kiaei, S.]
76. "Monolithic Supply Modulated RF Power Amplifier and DC-DC Power Converter IC," Proc. of 2003 IEEE MTT-S International, June 2003. [Abedinpour, S.; Deligoz, K.; Desai, J.; Figiel, M.; Kiaei, S.]
77. "A Novel Low Phase Noise 1.8V 900MHz CMOS Voltage Controlled Ring Oscillator," Proc. of ISCAS '03 Volume: 3, May, 2003. [Badillo, D.A.; Kiaei, S.]
78. "Monolithic Distributed Power Supply for a Mixed-Signal Integrated Circuit," Circuits and Systems, 2003. ISCAS '03. Proceedings of the 2003 International Symposium on, Volume: 3, 2003 [Abedinpour, S.; Kiaei, S.]
79. "A Pseudo-Concurrent 0.18 /spl mu/m Multi-Band CMOS LNA," Radio Frequency Integrated Circuits (RFIC) Symposium, 2003 IEEE, June 2003 [Lavasani, S.H.M.; Chaudhuri, B.; Kiaei, S.]
80. "Parasitic-aware synthesis of RF CMOS switching power amplifiers," Circuits and Systems, 2002. ISCAS 2002. IEEE International Symposium on , Volume: 1 , 2002 [Kiyong Choi; Allstot, D.J.; S. Kiaei]
81. "Monocycle shapes for ultra wideband system**,"** Circuits and Systems, 2002. ISCAS 2002. IEEE International Symposium on, Volume: 1, 2002, PP. 597 –600, [Xiaomin Chen; Kiaei, S.]
82. "An all-digital programmable digitally-controlled-oscillator (DCO) for digital wireless applications," Circuits and Systems, 2002. ISCAS 2002. IEEE International Symposium on, Volume: 4, 2002, [Abdollahi, S.R.; Kiaei, S.; Bakkaloglu, B.; Fakhraie, S.M.; Anvari, R.; Abdollahi, S.E. ]

83. "Optimum equalization of multicarrier systems: a unified geometric approach Communications, IEEE Transactions on, Volume: 49 Issue: 10, Oct. 2001; Page(s): 1762 –1769, [Lashkarian, N.; Kiaei, S.]
84. "Equalization for Discrete Multitone Transceivers to Maximize Bit Rate," IEEE Transactions on Signal Processing, Volume: 48, Issue:12, Dec. 2001; Pgs. 3123-3135, [Arslan, Evans, Kiaei]
85. "Performance of Differentially Detected DQPSK in the presence of I/Q Phase Imbalance," International Symposium on Circuits and Systems, Zurich, Switzerland, June 2000. [M. Scarpa, J. Vogel, J. Stonick, S. Kiaei]
86. "BER of differentially detected π/4 DQPSK in the presence of quadrature gain imbalance", 1999 IEEE Wireless Communications and Networking Conference, WCNC 1999, September 21-24, 1999, New Orleans, Louisiana, USA., 1999, [M. Scarpa, J. Vogel, J. Stonick, S. Kiaei]; 201-205;
87. "Globally Optimal ML Estimation of Timing and frequency offset in OFDM Systems," International Communications Conference, New Orleans, Louisiana, 2000. [N. Lashkarian, S. Kiaei]
88. "Minimum variance unbiased estimation of frequency offset in OFDM systems, a blind synchronization approach." Int. Conf. On Acoustics, Speech and Signal Processing, Istanbul, Turkey, 2000. [N. Lashkarian, S. Kiaei]
89. "Optimum Channel Shortening for Multicarrier Transceivers, " Int. Conf. On Acoustics, Speech and Signal Processing, Istanbul, Turkey, 2000.[G. Arslan, B. Evans, S. Kiaei]
90. "Class of Cyclic-Based Estimators for Frequency-Offset Estimation of OFDM Systems," IEEE Transactions on Communications, Volume: 48, Issue:12, Dec. 2000; Pgs. 2139-2149, [Lashkarian, Kiaei]
91. "Optimum Equalization of Multi-Carrier Systems Via Projection onto Convex Set," International Communication Conference, Vancouver, British Columbia, Canada, 1999. [N. Lashkarian, S. Kiaei]
92. "BER of Differentially Detected pi/4 DQPSK in the Presence of Quadrature Gain Imbalance" IEEE Wireless Communications and Networking Conference, Sept. 1999. [M. Scarpa, J. Vogel, J. Stonick, S. Kiaei]*
93. "Fast Equalizers for Finite Length MMSE Equalization with Application to DMT ADSL System," Int. Conf. On Acoustics, Speech and Signal Processing, vol. 5, pp. 2753-2756, Phoenix, AZ, 1999. [N. Lashkarian, S. Kiaei]
94. "Communication and Signal processing Circuits for ADSL/VDSL system," international workshop on design of mixed-mode integrated circuits and applications, Guanajuato, Mexico, July 1998. [S. Kiaei]
95. "Analysis of Adaptive CMOS Down Conversion Mixers," Proceedings of the 8th Great Lakes Symposium on VLSI, Feb. 1998. [Sandalci, C.K.; Kiaei, S.]
96. "DC offset correction for direct conversion transceivers," Great Lake VLSI Symposium, Lafayette, Louisiana, 1998. [C. Sandalci, S. Kiaei]*
97. "Fundamentals of ADSL system," SuperComm, Atlanta, GA, June 1998. [S. Kiaei]
98. "Low-Power RF Design," Design Automation Conference (DAC), Anaheim, CA, June 1997. [S. Kiaei]
99. "Adaptive Multi-user Detector for Asynchronous DS-CDMA in Rayleigh Fading," Transactions on Circuits and Systems II: Analog and Digital Signal Processing, June 1997. [Dutta, A.K.; Kiaei, S.]
100. "Δ-Σ Frequency-to-Time Conversion by Triangularly Weighted ZC Counter," International Symposium on Low Power Electronics and Design, Aug. 1997. [Hovin, M.; Kiaei, S.; Lande, T.S.]



IPR2024-01050
Apple EX1003 Page 176

101. "Introduction to the Special Issue on Low Power Wireless Communications," IEEE Transactions on Circuits and Systems II: Analog and Digital Signal Processing, June, 1997. [Kiaei, S.; Friedman, E.G.]

102. "Low Power Frequency-to-Time Conversion for Cellular Systems Using Predictive Zero-Crossing," 1997 IEEE 47th Vehicular Technology Conference, May 1997. [Dutta, A.K.; Kiaei, S.; Talwalkar, S.A.]

103. "Triangularly Weighted Zero-Crossing Detector Providing ΣΔ Frequency-to-Digital Conversion," Electronics Letters, Volume: 33, Issue: 13, June 1997. [Hovin, M.E.; Lande, T.S.; Wisland, D.T.; Kiaei, S.]

104. Pages:1121 - 1122

105. "Low-Power Delta-Sigma Time-to-Digital Conversion," *Proc. 1997 International Symposium on Low Power Electronics and Design*, pp. 52-56, Monterey, CA, 1997. [M. Hovin, S. Kiaei, T.S. Laude]

106. "Modified Adaptive Multi-user Detector for DS-CDMA with Fading," 47th Vehicular Technology Conference, VTC 97, Phoenix, AZ, May 97. [A. Dutta, S. Kiaei]

107. "Predictive Zero-Crossing Frequency Discrimination for Cellular Systems, Part I and II." 47th Vehicular Technology Conference, VTC 97, Phoenix, AZ, May 97. [A. Dutta, S. Kiaei]

108. "CDMA Multi-user Cancellation," ", Int. Conf. On Acoustics, Speech and Signal Processing, Munich, Germany, April 97. [A. Dutta, S. Kiaei]

109. "Digitally Correcting Schemes for Oversampled A/D," Int. Symp. On Circuits and systems, London, UK, 1994. [ S. Abdenadher, S. Kiaei, G. Temes, R. Schreier]*

110. "Multi-Rate Transformation of Recurrence Equations," Int. Conf. on ASAP, Venice, Italy, Oct. 1993. [Li Aihua, Y. Zheng, S. Kiaei]

111. "Adaptive Digital Correction for Dual Quantization /spl Sigma/-/spl Delta/ Modulators," IEEE International Symposium on Circuits and Systems, May 1993. [Kiaei, S.; Abdennadher, S.; Temes, G.C.; Yang, Y.]

112. "Analog Logic Techniques Steer Around the Noise," IEEE Circuits and Devices Magazine, Volume: 9, Issue: 5, Sept. 1993; Pages:18 – 21 [Allstot, D.J.; Kiaei, S.; Zele, R.H.]

113. "Folded Source-Coupled Logic vs. CMOS Static Logic for Low-Noise Mixed-Signal ICs," IEEE Transactions on Circuits and Systems I: Fundamental Theory and Applications, Sept. 1993. [Allstot, D.J.; San-Hwa Chee; Kiaei, S.; Shrivastawa, M.]

114. "Multi-Rate Transformation of Directional Affine Recurrence Equations," International Conference on Application-Specific Array Processors, Oct. 1993. [Zheng, Y.; Kiaei, S.]

115. "Adaptive self-correcting Σ–Δ modulators," International Conference on microelectronics, Tunisia, 1992. [S. Abdenadher, S. Kiaei, G. Temes]*

116. "Adaptive Self-Calibrating Delta-Sigma Modulators," Electronics Letters, Volume: 28, Issue: 14, 2 July 1992; Pages: 1288 – 1289. [Abdennadher, S.; Kiaei, S.; Temes, G.; Schreier, R.]

117. "Enhancement Source-Coupled Logic for Mixed-Mode VLSI Circuits," IEEE Transactions on Circuits and Systems II: Analog and Digital Signal Processing, Volume: 39, Issue: 6, June 1992; Pages: 399 – 402. [Maleki, M.; Kiaei, S.]

118. "On-line Adaptive Digital Correction of Dual-Quantization Delta-Sigma Modulators," Electronics Letters, Volume: 28, Issue: 16, 30 July 1992; Pages: 1511 – 1513 [Yaohua Yang; Schreier, R.; Temes, G.C.; Kiaei, S.]

119. "Piecewise Linear Schedules For Recurrence Equations," Workshop on VLSI Signal Processing, Oct. 1992. [Rajopadhye, S.; Mui, L.; Kiaei, S.]

120. "Synthesis Techniques for CMOS Folded Source-Coupled Logic Circuits," IEEE Journal of Solid-State Circuits, Aug. 1992. [Maskai, S.R.; Kiaei, S.; Allstot, D.J.]

121. "A Folding Transformation for VLSI IIR Filter Array Design," Proc. of International Conference on Acoustics, Speech, and Signal Processing, Toronto, Canada, pp. 1237-1240, May 1991. [S. Rajopadhye, S. Kiaei]

122. "Systematic Derivation of Multi-Rate VLSI Arrays for the Solution of Toeplitz Matrices," IEEE Great Lakes Symposium on VLSI, March 1991. Proc. of IEEE Pacific Rim Conference on Communications, Computers, and Signal Processing, Victoria, BC, Canada, pp. 623-626, May 1991. [S. Kiaei]

123. "CMOS Source-Couple Logic for Mixed-Mode VLSI," Proc. of International Symposium on Circuits and Systems, New Orleans, Louisiana, pp. 1608-1611, May 1990. [S. Kiaei, S.H. Chee, D. Allstot]

124. "VLSI Design of Multi-Rate Arrays," Proc. of International Conference on Acoustics, Speech, and Signal Processing, New Mexico, pp. 1049-1052, 1990. [L. Aihua, S. Kiaei]

125. "Comparison of Low-Noise Current-Mode Logic Circuits for High Performance Mixed-Mode Applications," Proc. of International Symposium on Circuits and Systems, New Orleans, Louisiana, May 1990. [S. H .Chee, S. Chow, S.S. Lee, S. Kiaei, D. Allstot]

126. "VLSI Design of Dynamically Reconfigurable Array Processors-DRAP,"" Proc. of International Conference on Acoustics, Speech, and Signal Processing, Glasgow, Scotland, 1989. [S. Kiaei, J. Durgham]

127. "VLSI Design of Bit/Serial Adaptive IIR Filters," Proc. of IEEE Pacific Conference on Communications, Computers, and Signal Processing, Victoria, Canada, pp. 650-652, June 1989. [R. Badyal, S. Kiaei]

128. "CCA Approach for ARMA Spectral Analysis," Proc. of IEEE International Symposium on Circuits and Systems, Portland, OR, pp. 1319-1322, May 1989. [S. Kiaei, L. Luo]

129. "Canonical Correlation Analysis (CCA) for ARMA Spectral Estimation," IEEE International Symposium on Circuits and Systems, May, 1989. [Kiaei, S.; Luo, L.]

130. "VLSI Implementation of Adaptive Bit/Serial IIR Filters," IEEE Pacific Rim Conference on Communications, Computers and Signal Processing, June 1989. [Badyal, R.; Kiaei, S.]

131. "VLSI design of WAP for Recursive Equations," VLSI Signal Processing, 1988. [S. Kiaei, U. Desai]

132. "Independent Data Flow Wavefront Array Processors for Recursive Equations," Proc. of 20th Annual Conference on Information Sciences and Systems, Princeton University, NJ, 1986. [S. Kiaei, U. Desai]

133. "A Stochastic Realization Approach to Reduced-Order Hierarchical Estimation," Proc. of 24th IEEE Conference on Dec., Ft. Lauderdale, FL, pp. 416-421, December 1985. [U. Desai, S. Kiaei]

134. "Hierarchical Estimation Algorithms," Proc. of IEEE Conference on Man, Cybernetics, and Systems, Tucson, AZ, October 1985. [U. Desai S. Kiaei]

135. "Approximation of Markovian Models with Non-Constant Parameters," Proc. of 23rd IEEE Conference on Dec., Las Vegas, NV, pp. 1642-1644, December 1984. [U. Desai, S. Banerjee, S. Kiaei]

136. "A Canonical Correlation Approach to Reduced-Order LQR Design," Proc. of 23rd IEEE Conference on Dec., Las Vegas, NV, pp. 1523-1528, December 1984. [U. Desai, S. Banerjee, S. Kiaei]

**Dr. Sayfe Kiaei**
**School of Electrical, Computer and Energy Engineering**
**Arizona State University, Tempe, AZ 85287**
**Sayfe@asu.edu**

## GRADUATE STUDENT ADVISEES & RESEARCH PROJECT

***(Partial list of Students graduated, current employment to the best of my knowledge)***

1. J. Durgam, VLSI Design of Dynamically Reconfigurable Array Processors, MSEE, 1988. Intel.
2. J. Gilbert, Minimization Techniques for PLAs, MSEE, 1988, Tektronix Inc.
3. L. Luo, CCA Methods for ARMA Spectral Estimation, MSEE, 1989. Berkeley Research Center
4. E. Zahl, Enhancement Methods for A/D Noise Reduction, MSEE, 1989. AT&T
5. L. Aihua, Synthesis of MRAs, MSEE, 1990. Intel.
6. F. Aslam, Image Restoration Methods, MSEE, 1990.
7. S.H. Chee, FSCL Circuits for Mixed-Mode IC's, MSEE, 1990. Linear Tech.
8. C. Dawson, MSEE, 1990. Boeing
9. A. Chow, Source-Coupled Logic ALU, MSEE, 1990. Intel
10. S. Maskai, Decimation Filters Using FSCL Circuits, MSEE, 1991. Intel
11. L. Louis, VLSI Implementation of Toeplitz Matrices, MSEE, 1991.
12. R. Badyal, Bit/Serial VLSI Design of IIR Filters, MSEE, 1992, HP
13. Lap Mui, Piece-Wise Linear Schedule for VLSI Arrays, MSEE, 1992. HP
14. S. Abdennadher, Adaptive Sigma-Delta Modulators, MSEE, 1992. Level One / Intel.
15. H. Bribech, Second Order Adaptive A/D Schemes, MSEE, 1992.
16. B. Hickman, MSEE, 92. Tektronix
17. M. Maleki, Current-Mode Flash A/D, MSEE, 1992. University of Oregon
18. Man Wong, Low-Noise Decimation Filter for Mixed-Mode ICs, MSEE, 1993, Motorola.
19. Anu Krishna Swamy, Low Noise IC Blocks for Mixed-mode IC's, MSEE, 1993, Ph.D., 1997.
20. Manu Srivastava, Comparison of Differential Logic (FSCL, CVSL, DSLL), MSEE, 1994, Intel.
21. Joel Oren, VLSI Design of Asynchronous FIR Filters, MSEE thesis, Feb. 1994. E-Systems.
22. Y. Zheng, VLSI Design and Synthesis of Multi-Rate Arrays, Ph.D. March 94, Hughes Research.
23. Satish Kulkarni, Low-Sensitivity Filters, MSEE, 1995, Motorola.
24. Amit Dutta, Multi-user Interference Cancellation, Ph.D, Dec. 97, Faculty, India.
25. Dwight Poplin, Multiplierless MPEG Decoder, MSEE, 1996. HP.
26. Maxim Scarpa, Adaptive I/Q Miss-match Correction for Direct Conversion Receivers, MSEE 1998.
27. Jeff McNeal, Sigma-Delta Frequency-to-Time Conversion, MSEE, 1998. Level One Comm.
28. Julia Vogel, Adaptive DC offset Cancellation, MSEE, 1998. Faculty in Germany.
29. Takao Inoue, MS, Echo Cancellation for ADSL, 1998. MSEE, The U of Texas at Austin.
30. Navid Lashkarian, Frequency off-set estimation and Synchronization of OFDM systems, Ph.D., June 1999. Broadcom Inc. & Faculty at UC San Jose.



IPR2024-01050
Apple EX1003 Page 179

31. Guner Arslan, (co-advisor with B. Evans), "Fast Equalization for DMT systems, with applications to ADSL," Ph.D. The University of Texas at Austin, 2000
32. Salem Abdennadher, I/Q Mismatch Correction for RF Wireless transceivers, Ph.D., Level One Comm/Intel.
33. Can Sandalci, DSL Line Driver, Ph.D., 2001, Intel.
34. Dean Badillo, Low-Cost VCO Ring Oscillators, PhD, 2004, Intel, Chandler,
35. Siamak Abedinpour, PhD, 2005 Freescale, Tempe, Arizona
36. Hemanth Shivalingaiah, Multi-Band Low Noise Amplifiers, Ph.D., 2006, Intel,
37. Shahin Farahani, PhD, 2006, Qualcomm Inc,
38. Nazanin Darbanian, M.S. Freescale, Tempe, Arizona
39. *Joe Rutkowski, Joseph, MS, 2004, Phillips.*
40. *Chaudhuri, Bikram, Synthesizer, MS/PhD, MS 2004.*
41. *Zhang, Jiandong, MEMs, MEMS, December-04*
42. *Afsahi, Ali, MS/PHD, UC San Diego, QUALCOMM, Connection One*
43. *Chen, Xiaomin, UWB, PHD, 2007, SRC/Motorola*
44. *Jali, Hilda, Power Management, MS, June-05,*
45. *Xuejin Wang, RF Optimization, 2006 CAD tools, PhD, Neo-Linear*
46. *Umar Lyles, Power Amplifier, MS, 2006. Texas Instruments*
47. MS, Erika Munoz, RADHARD, 2007, Intel
48. Waleed Khali, (Co-Advisor), Professor at Ohio State
49. Jennifer Kitchen, PhD, 2009, Professor at ASU
50. Shahin Mehdizad Taleie, RFDAC, PhD, 2009, Qualcomm
51. Ilker Deligoz, PHD, 2009, Qualcomm
52. Hyung Kim, PhD, Jan 2010, Intel
53. Jung Le, PhD 2010, Intel, TI
54. Syed Naqvi, PhD, 2012, Intel.
55. Todd Martin, MS, 2011, TI
56. Seungkee Min, PhD, 2011, Intel
57. Ali Meamar, Post Doc, RFIC 2013
58. Hitesh Khunti, MS 2013, Qualcom
59. Debashis Mandal, Post Doc, Research faculty 2015-2018
60. Edgar Martinez, PhD, 2015, Qualcomm
61. Chirag Desai, MS, 2016, Qualcom
62. Sanjay Avasarala, MS, 2016

63. Li Ming, MS, 2017
64. Qirong Peng, MS, 2017,
65. Yu Geng, PhD, 2018
66. Amir Ayati, PhD Aug 2018; Qualcomm
67. Pasisa Mahmoudi, PhD, May 2019, Qualcomm
68. Chai Yong, MS: 2015, PHD: 2019, Qualcomm
69. Shrikant Singh, MS: 2016, PhD, 2019, Movandi
70. Amir Alizadeh, Research Faculty 2019-Present
71. Ata S. PhD, 2021, Ata Sarrafinejad, PhD, 2021

## UNIVERSITY COMMITTEES

Various Committees at ASU, Oregon State University, etc.

## INDUSTRY COMMITTEES

- Arizona Telecommunications and Information Council (ATIC), Board Member
- CAS Fellows Committee (ends December 31, 2006)
- *IEEE CAS Phoenix Chapter Organizers (the committee is in the process of determining new chair – current chair not active)*
- *Executive Committee, RFIC 2006.*
- *Technical Program Comm, IEEE RFIC 2006.*
- *Executive Committee, Conferences, International Solid Sate System's Conference.*
- *IEEE CAS Society, VLSI Technical Comm. Member*
- *Editorial Board, IEEE Communications Surveys & Tutorials*
- *Radio Frequency Integrated Circuits- RFIC 2006*
- *IEEE RF Integrated Circuits Conference, Committee Chair for two workshops*
- *International Microwave Symposium, IMS-MTT 2006*
- *Int. Symposium on Circuits and Systems - ISCAS 2006*
- *Wireless Networks & Emerging Technologies, WNET06*
- *Midwest Symposium on Circuits and System*
- *Arizona Governor IT Advisory Committee – GITA*
- *Arizona Telecom – ATIC*

## INSTRUCTIONAL SUMMARY

- Digital IC Design, Analog IC Design, Advance CMOS Analog IC, VLSI, RFIC Design
- Wireless Transceiver Design, Wireless Communications, GPS, Telecomm Systems, Digital Communication



IPR2024-01050
Apple EX1003 Page 181

**Dr. Sayfe Kiaei**
**School of Electrical, Computer and Energy Engineering**
**Arizona State University, Tempe, AZ 85287**
**Sayfe@asu.edu**

- Signal Processing, Advance digital signal processing, Communication, Digital Communication, Digital Audio Processing, Adaptive array processing
- Computer Architecture, Microprocessor System Architecture, Pipeline Array Processing



IPR2024-01050
Apple EX1003 Page 182