quinn emanuel trial lawyers | washington, dc
1300 I Street NW, Suite 900, Washington, District of Columbia 20005-3314 | TEL (202) 538-8000 FAX (202) 538-8100

WRITER'S DIRECT DIAL NO.
(202) 538-8104

WRITER'S EMAIL ADDRESS
alexlasher@quinnemanuel.com

March 29, 2024

FILED VIA EDIS

The Honorable Lisa R. Barton
Secretary
U.S. International Trade Commission
500 E Street, SW, Room 112A
Washington, DC 20436

Re: ***Certain Cameras, Camera Systems, and Accessories Used Therewith***

Dear Secretary Barton:

Enclosed for filing, please find documents in support of a request by GoPro, Inc. ("Complainant") that the U.S. International Trade Commission institute an investigation pursuant to Section 337 of the Tariff Act of 1930, as amended, concerning certain cameras, camera systems, and accessories used therewith.

There is no confidential business information contained in the complaint itself, but we have included a separate letter requesting confidential treatment for six (6) exhibits included with this filing.

On March 16, 2020, the Commission provided "notice that it is temporarily waiving and amending certain of the Commission's rules that required the filing of paper copies, CD-ROMS, and other physical media in section 337 investigations to address concerns about COVID-19." International Trade Commission, Temporary Changes to Filing Procedures, Federal Register Vol. 85, No. 54 (March 19, 2020). Specifically, the Commission approved the temporary amendment of various rules "to permit parties to file section 337 complaints, exhibits, attachments, and appendices, electronically." *Id*. Accordingly, Complainant's filing only contains electronic documents.

Complainant's submission via EDIS includes the following:

1. One (1) electronic copy of Complainant's Verified Complaint, pursuant to Commission Rule 210.8(a)(1)(i).

2. One (1) electronic copy of the public exhibits to the Verified Complaint pursuant to Commission Rules 210.8(a)(1)(1) and 210.12(a)(9), including:

    a. one (1) electronic certified copy of each of United States Patent Nos. 10,015,413 ("the '413 patent"), 10,529,052 ("the '052 patent"), 10,574,894 ("the '894 patent"), 10,958,840 ("the '840 patent"), 11,336,832 ("the '832 patent"), and D789,435 ("the D'435 patent"), copies of which are respectively included as Exhibits 1, 3, 5, 7, 9, and 11 to the Verified Complaint pursuant to Commission Rule 210.12(a)(9)(1); and

    b. one (1) electronic copy of the certified assignment records for each of the '413, '052, '894, '840, '832, and D'435 patents, copies of which are respectively included as Exhibits 2, 4, 6, 8, 10, and 12 to the Verified Complaint, pursuant to Commission Rule 210.12(a)(9)(ii).

3. One (1) electronic copy of the confidential exhibits to the Verified Complaint, pursuant to Commission Rules 201.6(c) and 210.8(a)(1)(ii).

4. One (1) electronic copy of the certified prosecution history for each of the '413, '052, '894, '840, '832, and D'435 patents, which are respectively identified as Appendices A, C, E, G, I, and K to the Verified Complaint, pursuant to Commission Rule 210.12(c)(1).

5. One (1) electronic copy of each patent and applicable pages of each technical reference mentioned in the respective prosecution histories of the '413, '052, '894, '840, '832, and D'435 patents, which are respectively identified as Appendices B, D, F, H, J, and L to the Verified Complaint, pursuant to Commission Rule 210.12(c)(2).

6. A letter and certification requesting confidential treatment for the information contained in confidential exhibits 30-34 and 36 to the Verified Complaint, pursuant to Commission Rules 201.6(b) and 210.5(d).

7. A Statement on the Public Interest regarding the remedial orders sought by Complainant in the Verified Complaint, pursuant to Commission Rule 210.8(b).

Complainant confirms that it will serve copies of the non-confidential versions of the Complaint and all associated exhibits and appendices upon the institution of this investigation on the proposed Respondents and all other appropriate entities consistent with 19 C.F.R. part 201 (including 19 C.F.R. § 201.16) and the Temporary Procedures.

Please contact me with any questions regarding this filing.

Respectfully submitted,

/s/ *S. Alex Lasher*
S. Alex Lasher
Counsel for Complainant GoPro, Inc.

quinn emanuel trial lawyers | washington, dc
1300 I Street NW, Suite 900, Washington, District of Columbia 20005-3314 | TEL (202) 538-8000 FAX (202) 538-8100

WRITER'S DIRECT DIAL NO.
(202) 538-8104

WRITER'S EMAIL ADDRESS
alexlasher@quinnemanuel.com

REQUEST FOR CONFIDENTIAL TREATMENT

March 29, 2024

FILED VIA EDIS

The Honorable Lisa R. Barton
Secretary
U.S. International Trade Commission
500 E Street, SW, Room 112A
Washington, DC 20436

Re: ***Certain Cameras, Camera Systems, and Accessories Used Therewith***

Dear Secretary Barton:

Pursuant to Commission Rule 201.6, Complainant GoPro, Inc. respectfully requests confidential treatment of certain confidential business information contained in confidential exhibits 30-34 and 36 to the Verified Complaint.

The information in the exhibits for which Complainant seeks confidential treatment consists of proprietary commercial information, including confidential and proprietary technical information related to domestic articles protected by Complainant's asserted patents, and financial data regarding Complainant's domestic investments in plant, equipment, labor, and capital related to domestic articles protected by Complainant's asserted patents.

The proprietary information described herein qualifies as confidential business information under Commission Rule 201.6 because substantially identical information is not available to the public, because the disclosure of this information would cause substantial competitive harm to Complainant, and because the disclosure of this information would likely impede the Commission's efforts and ability to obtain similar information in the future.

Thank you for your attention. Please contact me with any questions regarding this request for confidential treatment.

Respectfully submitted,

/s/ *S. Alex Lasher*
S. Alex Lasher
Counsel for Complainant GoPro, Inc.

UNITED STATES INTERNATIONAL TRADE COMMISSION
WASHINGTON, D.C.

In the Matter of **CERTAIN CAMERAS, CAMERA SYSTEMS, AND ACCESSORIES USED THEREWITH**	**Investigation No. 337-TA-___**

CERTIFICATION

I, S. Alex Lasher, counsel for Complainant GoPro, Inc., declare as follows:

1. I am duly authorized by Complainant to execute this certification.

2. I have reviewed confidential exhibits 30-34 and 36 to Complainant's Verified Complaint, for which Complainant seeks confidential treatment.

3. Confidential Exhibits 30-34 are confidential claim charts showing how exemplary Complainant's domestic industry products practice exemplary claims of the Asserted Patents. These charts contain confidential commercial and technical information about Complainant's domestic industry products, which is not available for public dissemination. Disclosure of this proprietary information to the public would cause substantial harm to Complainant and its competitive position. Disclosure of this information also would impair the Commission's ability to obtain information necessary to perform its statutory function.

4. Confidential Exhibit 36 is a confidential declaration concerning Complainant's domestic investments in plant, equipment, labor, and capital related to domestic articles protected by the Asserted Patents. Disclosure of this proprietary information to the public would cause substantial harm to Complainant and its competitive position. Disclosure of this information also would impair the Commission's ability to obtain information necessary to perform its statutory function.

5. To the best of my knowledge, information, and belief, founded after a reasonable inquiry, substantially identical information to that contained in the exhibits is not available to the public.

I declare under penalty of perjury that the foregoing is true and correct.

Executed this 29th day of March, 2024 in Washington, D.C.

/s/ *S. Alex Lasher*
S. Alex Lasher

UNITED STATES INTERNATIONAL TRADE COMMISSION
WASHINGTON, D.C.

In the Matter of **CERTAIN CAMERAS, CAMERA SYSTEMS, AND ACCESSORIES USED THEREWITH**	**Investigation No. 337-TA-___**

COMPLAINANT'S INITIAL STATEMENT ON THE PUBLIC INTEREST

Pursuant to 19 C.F.R. § 210.8(b), Complainant GoPro, Inc. ("GoPro") respectfully submits this Statement on the Public Interest concurrently with its Complaint. The limited exclusion and cease-and-desist orders GoPro seeks against Proposed Respondents Arashi Vision Inc. and Arashi Vision (U.S.) LLC, d/b/a Insta360 (collectively, "Proposed Respondents" or "Insta360") will not have an adverse effect on public health and welfare, competitive conditions in the United States economy, the production of like or directly competitive articles in the United States, or United States consumers.

The articles subject to exclusion are cameras and camera systems used by consumers to document themselves and others engaging in various activities, such as skiing, hiking, or biking. These are not the type of articles the Commission has found to implicate public interest concerns if excluded. *Certain Baseband Processor Chips and Chipsets, Transmitter and Receiver (Radio) Chips, Power Control Chips*, Inv. No. 337- TA-543, Comm'n Op. at 136-137 (June 19, 2007); *Spansion, Inc. v. Int'l Trade Comm'n*, 629 F.3d 1331, 1360 (Fed. Cir. 2010). Rather, the public interest is served by protecting and enforcing GoPro's intellectual property through the requested remedial orders. *See*, *e.g., Certain Laser Bar Code Scanners & Scan Engines*, 337-TA-551, Comm'n Op. at 24 (June 14, 2007) (issuing limited exclusion and cease-and-desist orders, noting "the public interest favors the protection of U.S. intellectual property rights by excluding infringing

imports."). Accordingly, as demonstrated below, the Commission need not delegate public interest fact-finding to the Administrative Law Judge.

I. Explanation of How The Articles Potentially Subject to The Requested Remedial Orders Are Used in the United States

The Accused Products in this matter are cameras and camera systems used by consumers in the U.S. to film themselves and others engaging in a variety of activities, such as hiking, skiing, biking, motocross, mountain climbing, etc. The Accused Products include at least the Insta360 "ONE X," "ONE R," "ONE R 1-inch," "ONE X2," "ONE RS," "ONE RS 1-inch 360," "X3," "GO 3," "Ace," and "Ace Pro."

II. Identification of Any Public Health, Safety, or Welfare Concerns Relating to the Requested Remedial Orders

Issuance of a limited exclusion and cease-and-desist order against the Proposed Respondents will have no adverse impact on public health, safety, or welfare. The Accused Products are not of the type the Commission has previously identified as implicating public health, safety, or welfare concerns such that relief should be denied; they are not medical devices, pharmaceuticals, vaccines, or otherwise health related, and they do not implicate any national security interest. *See*, *e.g.*, *Spansion,* 629 F.3d at 1360 (Fed. Cir. 2010) (noting that the Commission has denied relief in only three cases—where "the exclusion order was denied because inadequate supply within the United States—by both the patentee and domestic licensees—meant that an exclusion order would deprive the public of products necessary for some important health or welfare need: energy efficient automobiles, basic scientific research, or hospital equipment."). Moreover, because GoPro seeks a limited exclusion order, exclusion is limited to the Proposed Respondents' products and does not implicate cameras and camera systems offered by third parties. Thus, consumers will still have access to non-infringing products offered by GoPro or third parties.

III. Identification of Like or Directly Competitive Products That GoPro and Third Parties Make That Could Replace the Subject Articles if They Were to be Excluded

GoPro currently sells—and will continue to sell—a directly competitive product to every product that is subject to exclusion. And GoPro is one of several companies currently selling suitable alternatives to the Insta360 products that will be excluded. For example, at least Akaso, Olympus, and DJI sell cameras and camera systems in the United States that compete with Insta360's infringing products.[1]

IV. Indication of Whether GoPro and Third Parties Have the Capacity to Replace the Volume of Products Subject to the Requested Remedial Orders in a Commercially Reasonable Time in the United States

GoPro has the capacity to fill any supply gap resulting from exclusion without delay, and it expects that third parties, including those noted above, would similarly be able to meet increased demand. Consumers who use infringing Insta360 products will therefore still have ample access to products with comparable features. *See e.g., Certain Digital Televisions & Certain Prods. Containing Same & Methods of Using Same*, Inv. No. 337-TA-617, Comm'n Op. at 15 (Apr. 23, 2009) (finding no public interest concerns and noting that there are suitable alternatives to the products subject to exclusion); *Certain Electronic Digital Media Devices & Components Thereof*, Inv. No. 337-TA-796, Comm'n Op. at 114-15 (Sept. 6, 2013) (same).

V. Statement of How the Requested Remedial Orders Would Impact U.S. Consumers

As discussed, GoPro and third-party companies produce and sell cameras and camera systems that are suitable alternatives to the infringing products sold by the Proposed Respondents. And, rather than implicating public interest or welfare concerns, exclusion will benefit the public interest by protecting GoPro's intellectual property and fostering a system where meaningful

[1] https://www.techradar.com/news/best-action-camera.

innovation is rewarded and intellectual property theft is deterred. This will encourage innovation in both the action camera industry and the U.S. economy more generally, ultimately benefiting U.S. consumers.

VI. Conclusion

For the foregoing reasons, GoPro respectfully submits that its requested relief will not implicate any public interest concerns enumerated in 19 U.S.C. §1337(d) and (f), and that public interest fact-finding should not be delegated to the Administrative Law Judge.

Dated: March 29, 2024

Respectfully submitted,

/s/ *S. Alex Lasher*
S. Alex Lasher
Michael R. Doman, Jr.
QUINN EMANUEL URQUHART & SULLIVAN LLP
1300 I Street, NW, Suite 900
Washington, D.C. 20005
Tel.: (202) 538-8000

Patrick T. Schmidt
QUINN EMANUEL URQUHART & SULLIVAN LLP
865 S Figueroa St, 10th Floor
Los Angeles, CA 90017
Tel.: (213) 443-3000

Sean S. Pak
QUINN EMANUEL URQUHART & SULLIVAN LLP
50 California Street, 22nd Floor
San Francisco, CA 94111
Tel.: (415) 875-6600

Nathan Hamstra
QUINN EMANUEL URQUHART & SULLIVAN LLP
191 N. Wacker Drive, Suite 2700
Chicago, Illinois 60606
Tel.: (312) 705-7400

Counsel for Complainant GoPro, Inc.

UNITED STATES INTERNATIONAL TRADE COMMISSION
WASHINGTON, D.C.

In the Matter of **CERTAIN CAMERAS, CAMERA SYSTEMS, AND ACCESSORIES USED THEREWITH**	**Investigation No. 337-TA-___**

COMPLAINT UNDER SECTION 337 OF THE TARIFF ACT OF 1930, AS AMENDED

Complainant

GoPro, Inc.
3025 Clearview Way
San Mateo, CA 94402
(650) 332-7600

Counsel for Complainant

S. Alex Lasher
Michael R. Doman, Jr.
QUINN EMANUEL URQUHART & SULLIVAN LLP
1300 I Street, NW, Suite 900
Washington, D.C. 20005
Tel.: (202) 538-8000

Patrick T. Schmidt
QUINN EMANUEL URQUHART & SULLIVAN LLP
865 S Figueroa St, 10th Floor
Los Angeles, CA 90017
Tel.: (213) 443-3000

Sean S. Pak
QUINN EMANUEL URQUHART & SULLIVAN LLP
50 California Street, 22nd Floor
San Francisco, CA 94111
Tel.: (415) 875-6600

Proposed Respondents:

Arashi Vision Inc. d/b/a Insta360
12F, Building T2
Hengyu Qianhai Financial Center
Nanshan District
Shenzhen, P.R. China

Arashi Vision (U.S.) LLC
d/b/a Insta360
2323 Main St., Unit 16
Irvine, CA 92614
(800) 692 0360

Nathan Hamstra
QUINN EMANUEL URQUHART & SULLIVAN LLP
191 N. Wacker Drive, Suite 2700
Chicago, Illinois 60606
Tel.: (312) 705-7400

TABLE OF CONTENTS

I. Introduction 1

II. The Complainant 4

III. The Proposed Respondents 4

A. Arashi Vision Inc., d/b/a Insta360 4

B. Arashi Vision (U.S.) LLC, d/b/a Insta360 5

IV. The Products and Technology At Issue 5

A. The Products at Issue 5

B. The Technology at Issue 5

V. The Asserted Patents And Non-Technical Descriptions of The Inventions 9

A. The ’413 Patent 9

1. Identification of the Patent and Ownership 9

2. Non-Technical Description of the Patented Invention 10

3. Foreign Counterparts 10

B. The ’052 Patent 10

1. Identification of the Patent and Ownership 10

2. Non-Technical Description of the Patented Invention 11

3. Foreign Counterparts 11

C. The ’894 Patent 12

1. Identification of the Patent and Ownership 12

2. Non-Technical Description of the Patented Invention 12

3. Foreign Counterparts 13

D. The ’840 Patent 13

1. Identification of the Patent and Ownership 13

2. Non-Technical Description of the Patented Invention 13

3. Foreign Counterparts 14

E. The ’832 Patent 14

1. Identification of the Patent and Ownership 14

2. Non-Technical Description of the Patented Invention 15

3. Foreign Counterparts 15

F. The D'435 Patent 15
1. Identification of the Patent and Ownership 15
2. Description of the Patented Design 16
3. Foreign Counterparts 17
G. Licensees to the Asserted Patents 17
VI. Unlawful and Unfair Acts of Proposed Respondents—Patent Infringement 17
A. Direct Infringement 18
1. '413 Patent 18
2. '052 Patent 18
3. '894 Patent 18
4. '840 Patent 19
5. '832 Patent 19
6. D'435 Patent 19
B. Indirect Infringement of the Asserted Utility Patents 21
VII. Specific Instances of Unfair Importation and Sale 22
VIII. Related Litigation 22
IX. Harmonized Tariff Schedule Numbers 22
X. The Domestic Industry 23
XI. Requested Relief 24

Insta360
Exhibit 1011 Page 15

EXHIBIT LIST

Exhibits	Description
1	Certified Copy of U.S. Patent No. 10,015,413
2	Certified Assignment Records for U.S. Patent No. 10,015,413
3	Certified Copy of U.S. Patent No. 10,529,052
4	Certified Assignment Records for U.S. Patent No. 10,529,052
5	Certified Copy of U.S. Patent No. 10,574,894
6	Certified Assignment Records for U.S. Patent No. 10,574,894
7	Certified Copy of U.S. Patent No. 10,958,840
8	Certified Assignment Records for U.S. Patent No. 10,958,840
9	Certified Copy of U.S. Patent No. 11,336,832
10	Certified Assignment Records for U.S. Patent No. 11,336,832
11	Certified Copy of U.S. Design Patent No. D789,435
12	Certified Assignment Records for U.S. Design Patent No. D789,435
13	List of Foreign Counterparts to Asserted Patents
14	U.S. Patent No. 10,015,413 Infringement Chart
15	U.S. Patent No. 10,529,052 Infringement Chart
16	U.S. Patent No. 10,574,894 Infringement Chart
17	U.S. Patent No. 10,958,840 Infringement Chart
18	U.S. Patent No. 11,336,832 Infringement Chart
19	U.S. Design Patent No. D789,435 Infringement Chart
20	https://store.insta360.com/product/x3?c=2118&from=nav
21	Evidence of Importation of X3
22	Evidence of Importation of ONE X2
23	Evidence of Importation of ONE X
24	Evidence of Importation of ONE R
25	Evidence of Importation of ONE RS
26	Evidence of Importation of ONE RS 1-inch 360
27	Evidence of Importation of Ace
28	Evidence of Importation of AcePro
29	Evidence of Importation of GO3
30	Public Version of U.S. Patent No. 10,015,413 Domestic Industry Chart
30C	U.S. Patent No. 10,015,413 Domestic Industry Chart
31	Public Version of U.S. Patent No. 10,529,052 Domestic Industry Chart
31C	U.S. Patent No. 10,529,052 Domestic Industry Chart
32	Public Version of U.S. Patent No. 10,574,894 Domestic Industry Chart
32C	U.S. Patent No. 10,574,894 Domestic Industry Chart
33	Public Version of U.S. Patent No. 10,958,840 Domestic Industry Chart
33C	U.S. Patent No. 10,958,840 Domestic Industry Chart
34	Public Version of U.S. Patent No. 11,336,832 Domestic Industry Chart
34C	U.S. Patent No. 11,336,832 Domestic Industry Chart
35	U.S. Design Patent No. D789,435 Domestic Industry Chart
36	Public Version of Declaration of Brian Tratt
36C	Declaration of Brian Tratt

APPENDIX LIST

Appendices	Description
A	Certified Prosecution History of U.S. Patent No. 10,015,413
B	Patents and Applicable Pages of Technical References Mentioned in the Prosecution History of U.S. Patent No. 10,015,413
C	Certified Prosecution History of U.S. Patent No. 10,529,052
D	Patents and Applicable Pages of Technical References Mentioned in the Prosecution History of U.S. Patent No. 10,529,052
E	Certified Prosecution History of U.S. Patent No. 10,574,894
F	Patents and Applicable Pages of Technical References Mentioned in the Prosecution History of U.S. Patent No. 10,574,894
G	Certified Prosecution History of U.S. Patent No. 10,958,840
H	Patents and Applicable Pages of Technical References Mentioned in the Prosecution History of U.S. Patent No. 10,958,840
I	Certified Prosecution History of U.S. Patent No. 11,336,832
J	Patents and Applicable Pages of Technical References Mentioned in the Prosecution History of U.S. Patent No. 11,336,832
K	Certified Prosecution History of U.S. Design Patent No. D789,435
L	Patents and Applicable Pages of Technical References Mentioned in the Prosecution History of U.S. Design Patent No. D789,435

I. INTRODUCTION

1. GoPro, Inc. ("GoPro" or "Complainant") brings this Complaint under Section 337 of the Tariff Act of 1930, as amended, 19 U.S.C. § 1337, based on the unlawful sale for importation into the United States, importation into the United States, and/or sale within the United States after importation by Proposed Respondents Arashi Vision Inc. and Arashi Vision (U.S.) LLC, d/b/a Insta360 (collectively "Proposed Respondents"), of certain cameras, camera systems, and accessories used therewith that infringe one or more claims of U.S. Patent No. 10,015,413 ("the '413 patent"), U.S. Patent No. 10,529,052 ("the '052 patent"), U.S. Patent No. 10,574,894 ("the '894 patent"), U.S. Patent No. 10,958,840 ("the '840 patent"), U.S. Patent No. 11,336,832 ("the '832 patent"), and U.S. Design Patent No. D789,435 ("the D'435 patent") (collectively, the "Asserted Patents"). Specifically, on information and belief, the Proposed Respondents sell for importation into the United States, import into the United States, and/or sell within the United States after importation certain cameras, camera systems, and accessories used therewith that infringe at least the following claims of the Asserted Patents, in violation of Section 337:

	'413 Patent	'052 Patent	'894 Patent	'840 Patent	'832 Patent	D'435 Patent
Claims[1]	**1**, **2**-12	**1**-10	**1**-10, **11**-20	**1**-15, **16**-21	**1**-10	1 Claim, 10 Drawings

2. GoPro helps the world capture and share itself in immersive and exciting ways. The California company was founded in 2002 by Nick Woodman, an entrepreneur in search of a better way to film himself and his friends surfing. The company quickly expanded into creating solutions for other activity and capture segments including motorsports, snow sports, water sports, airborne sports, cycling, vlogging, travel, and more.

[1] Independent claims are bolded.

3. Over the years, GoPro has grown into a world-renowned brand praised for its versatile and empowering products. Owing to its significant investment in developing and perfecting cutting-edge image capture and processing technology, GoPro has commercialized an entire line of cameras that have fundamentally transformed the way people capture, manage, share, and enjoy meaningful life experiences. What began as an idea to help athletes capture themselves engaging in their sport has become a widely adopted solution for consumers to document and share compelling, immersive photo and video of themselves participating in their favorite activities. From extreme to mainstream, professional to consumer, GoPro's patented technology has given the world the ability to capture and share its passions in immersive and exciting ways.

4. Today, GoPro sells its cameras and related accessories in over 80 countries and continues to advance camera technology, such as by enhancing picture and video quality and user experience.

5. The Asserted Patents protect GoPro's novel technology, which took an immense amount of time and hundreds of millions of dollars to develop. In particular, the Asserted Patents protect GoPro's renowned SuperView, virtual lens, HyperSmooth, and Horizon Leveling technology used in its HERO and MAX line of products. One of the Asserted Patents also protects GoPro's signature, ornamental camera design.

6. As discussed in Section IV, GoPro's protected technology gives anyone the ability to capture high-quality, professional-grade photo and video while performing virtually any activity, something that cannot be done with a traditional camera. Indeed, GoPro has earned two Emmy® Awards for innovations in design and technology that have had a material impact on the television industry. In relation to its HyperSmooth technology, GoPro was recognized in

2022 for innovation in the category of "In-Camera Sensor and Software Stabilization," recognizing the technologies powering HyperSmooth. In 2013, GoPro was recognized with its first Emmy® for being the pioneer in "Inexpensive Small Rugged HD Camcorders."

7. Rather than spend the time and money to develop their own technology, the Proposed Respondents chose instead to copy GoPro's and violate Section 337 through the sale for importation into the United States, importation into the United States, and/or sale within the United States after importation of cameras, camera systems, and accessories used therewith that infringe the Asserted Patents.

8. GoPro therefore brings this Complaint to remedy the Proposed Respondents' violation of Section 337. GoPro seeks a permanent limited exclusion order pursuant to 19 U.S.C. § 1337(d)(1) that excludes from entry into the United States cameras, camera systems, and accessories used therewith that infringe one or more of the Asserted Patents.

9. GoPro also seeks as relief permanent cease-and-desist orders pursuant to Section 19 U.S.C. § 1337(f) prohibiting the Proposed Respondents, their subsidiaries, related companies, and agents from conducting any of the following activities in the United States in relation to cameras, camera systems, and accessories used therewith that infringe one or more of the Asserted Patents: importing, selling, offering for sale, licensing, leasing, advertising, marketing, packaging, repacking, distributing, bundling, transferring, demonstrating, maintaining inventory, otherwise using, and soliciting or aiding and abetting others in such conduct.

10. GoPro further requests that the Commission impose a bond, pursuant to 19 U.S.C. § 1337(j), upon importation of cameras, camera systems, and accessories used therewith that infringe one or more of the Asserted Patents.

11. A domestic industry as required by 19 U.S.C. § 1337(a)(2)–(3) exists in the United States relating to the Asserted Patents. GoPro's domestic industry with respect to the Asserted Patents includes significant investments in plant and equipment, significant employment of labor and capital, and substantial investments in the exploitation of the inventions claimed in the Asserted Patents, including through engineering, research, and development.

II. THE COMPLAINANT

12. Complainant GoPro, Inc. is a corporation incorporated and existing under the laws of the State of Delaware. GoPro, Inc. has its principal place of business at 3025 Clearview Way, San Mateo, California 94402.

13. GoPro helps the world capture and share itself in immersive and exciting ways. Through a tremendous amount of development, engineering, and product-centric work—which continues today—GoPro has created and commercialized revolutionary cameras and related accessories that allow consumers to capture and share their activities and interests like never before. From 2019 through November 2023, GoPro sold roughly 16.8 million cameras worldwide.

III. THE PROPOSED RESPONDENTS

A. Arashi Vision Inc., d/b/a Insta360

14. On information and belief, Proposed Respondent Arashi Vision Inc., doing business as Insta360, is a company incorporated under the laws of the People's Republic of China, with its principal operating business located at 12F, Building T2, Hengyu Qianhai Financial Center, Nanshan District, Shenzhen, P.R. China.

15. On information and belief, Arashi Vision Inc. imports into the United States, sells for importation into the United States, and/or sells within the United States after importation cameras, camera systems, and accessories used therewith that infringe one or more of the

Asserted Patents. Arashi Vision Inc. is not licensed to any of the Asserted Patents and its infringement is intentional.

B. Arashi Vision (U.S.) LLC, d/b/a Insta360

16. On information and belief, Proposed Respondent Arashi Vision (U.S.) LLC, also doing business as Insta360, is a company incorporated under the laws of Delaware, with its principal operating business located at 2323 Main St., Unit 16, Irvine, CA 92614.

17. On information and belief, Arashi Vision (U.S.) LLC is Arashi Vision Inc.'s U.S. subsidiary operating in the United States and engaged in the importation into the United States, sale for importation into the United States, and/or sale within the United States after importation of cameras, camera systems, and accessories used therewith that infringe one or more of the Asserted Patents. Arashi Vision (U.S.) LLC is not licensed to any of the Asserted Patents and its infringement is intentional.

IV. THE PRODUCTS AND TECHNOLOGY AT ISSUE

A. The Products at Issue

18. Pursuant to Commission Rules 210.10(b)(1) and 210.12(a)(12), in plain English, the categories of products accused are action and 360-degree cameras and systems, as well as camera-mounting systems, frames, and camera-wearable systems used therewith ("Accused Products"). The Accused Products infringe the Asserted Patents by themselves embodying and practicing the patented inventions, as well as by inducing and contributing to the infringement of others through the use of the Accused Products, including use in connection with supporting applications such as mobile and desktop video editing and sharing applications.

B. The Technology at Issue

19. The technology at issue generally relates to GoPro's novel and proprietary SuperView, virtual lens, HyperSmooth, and Horizon Leveling technology used in its HERO and

MAX line of products. As discussed below, these technologies, covered by the asserted patents, provide concrete and tangible solutions to specific technical problems arising in the field of cameras and digital imaging technology. The claimed inventions allow users to capture and edit professional-grade photo and video of themselves and others engaging in virtually any activity in a way that was not possible before.

20. For example, with GoPro's SuperView technology disclosed and claimed by the '413 patent, users are able to capture an immersive, wide-angle perspective through dynamic and non-uniform stretching of the video frame aspect ratio (i.e., the proportional relationship between the width and height of a video frame). Prior to the SuperView invention, a camera output field of view was generally limited by the aspect ratio of the intended display. This constraint resulted in an undesirable reduction in the field of view when the user would shoot images and videos from certain perspectives. The SuperView invention addresses this issue by providing novel image processing technique allowing the camera to automatically and non-uniformly stretch images/frames captured in a first aspect ratio into output images/frames capable of being displayed in a second aspect ratio. For example, using the invention, a user could capture content in a 4:3 video frame and then fit that same content into a 16:9 frame, all while limiting distortion effects near the center of the frame. The result is a unique and immersive perspective, providing more content within the output frame than the camera could have captured directly with the desired aspect ratio. While there are countless scenarios where SuperView mode provides excellent results, it is particularly useful for activities where the camera is facing towards or away from the user and mounted on the user's head, chest, or bike, such as in the cases of skiing, biking, motocross, or other active use cases.

21. GoPro's virtual lens technology disclosed and claimed by the '052 patent allows for editing, cropping, and recentering of images and video to maximize their quality and viewing experience. This technology is implemented both in post-production editing applications, as well as an element of "in camera" image processing and stabilization. Prior to GoPro's invention, performing certain cropping, recentering, and/or zooming functions on captured images tended to exacerbate distortion, resulting in an undesirable image. Further, performing cropping, recentering, and/or zooming functions on captured video frames could introduce different distortion effects to different frames within the video, resulting in a jarring and/or unnatural video experience. Prior approaches to addressing these issues involved several drawbacks, such as the need for multiple image transformations, consuming image processing resources and degrading the overall quality of the image. GoPro's virtual lens technology addresses these issues, by providing a novel and unique approach of applying a given lens distortion model to each sub-frame within a series of frames to efficiently produce consistent lens characteristics across each edited image or video. The invention allows users to efficiently obtain edited video or images that simulate the same effect that would have been achieved if the user had physically re-oriented the camera to produce the panning, re-pointing, cropping, or zooming effects, without a perceivable loss in image fidelity.

22. GoPro's HyperSmooth technology disclosed and claimed by the '894 and '840 patents provides advanced electronic image stabilization to capture smooth and stable video footage even in challenging and shaky conditions. Camera users often seek to capture themselves performing activities such as surfing, mountain biking, or hiking over uneven terrain. These activities (and others) inevitably result in shaky or unstable images or video, as users cannot perfectly hold the camera steady throughout the duration of a capture event. Prior art

systems for stabilizing images and videos, such as mechanical gimbals and stabilizers, introduced additional components, increased complexity, and generally were not effective in stabilizing videos over the range of activities experienced by camera users. GoPro's HyperSmooth technology addresses this problem by using internal circuitry to identify and track the motion of the camera, and then applying novel technology and image processing techniques to digitally compensate for this camera movement. The result is a smooth, easy-to-watch video, even in situations where the footage would have been unusable in previous cameras. GoPro's HyperSmooth inventions are particularly useful in situations where the camera is subject to vibrations, bumps, or rapid movements, such as during action sports or other adventurous activities.

23. GoPro's Horizon Leveling technology disclosed and claimed by the '832 patent provides a technique to capture a smooth, horizon-leveled video regardless of whether users are sideways, flipping through the air, or chasing after a target. As noted above, users of conventional cameras faced the problem of shaky and/or unstable video, especially when shooting during action sports. And, GoPro recognized that certain unintended rotational motions were particularly problematic because they provided the appearance of an off-axis horizon. GoPro's Horizon Leveling technology is specifically addressed to this problem, providing a novel and targeted technique for leveling user videos only on the horizontal axis (i.e., orthogonal to the gravity vector), meaning that the image horizon remains level while any movement from panning up or down still remains visible in the shots. This effect can also provide a unique and improved first-person perspective of movement through a scene relative to the leveled horizon, for example when a user performs a 360-degree rotation in an aircraft or on a roller coaster. GoPro's Horizon Leveling technology works in tandem with GoPro's HyperSmooth technology,

described above, to provide a further degree of image stabilization, particularly where the camera is subject to bumps and rapid movements, such as during action sports and adventurous activities.

24. Lastly, GoPro's D'435 design patent covers the signature GoPro ornamental camera design. For years, the iconic design covered by D'435 has become synonymous in the eye of consumers with GoPro's brand and its unique line of cameras.

V. THE ASSERTED PATENTS AND NON-TECHNICAL DESCRIPTIONS OF THE INVENTIONS[2]

A. The '413 Patent

1. Identification of the Patent and Ownership

25. GoPro owns by assignment the right, title, and interest in United States Patent No. 10,015,413, titled "Conversion Between Aspect ratios in Camera." The '413 patent issued on July 3, 2018, and names Nicholas D. Woodman, Sumit Chawla, Loic Segapelli, and Scott Patrick Campbell as co-inventors. The '413 patent expires on February 14, 2034, and claims priority to provisional United States Patent Application No. 61/869,029, filed on August 22, 2013.

26. Pursuant to Commission Rule 210.12(a)(9)(i), a certified copy of the '413 patent is attached hereto as Exhibit 1. Pursuant to Commission Rule 210.12(a)(9)(ii), a certified copy of the assignment from the named inventors to GoPro is attached as Exhibit 2. Pursuant to Commission Rule 210.12(c)(1), a certified copy of the prosecution history of the '413 patent is attached hereto as Appendix A. Pursuant to Commission Rule 210.12(c)(2), a copy of each

[2] All non-technical descriptions of the patents herein are presented to give a general background of those patents. These statements are not intended to be used nor should they be used for purposes of patent claim construction. GoPro presents these statements subject to and without waiver of its right to argue that claim terms should be construed in a particular way under claim interpretation jurisprudence and the relevant evidence.

patent and applicable pages of each technical reference mentioned in the prosecution history of the ’413 patent is attached hereto as Appendix B.

2. Non-Technical Description of the Patented Invention

27. The ’413 patent generally describes a camera system that captures an image in a source aspect ratio (for example, 4:3) and then applies a transformation to the input image to scale and warp the image to generate an output image with a target aspect ratio different than the source aspect ratio (for example, 16:9). The output image maintains image resolution, and limits distortion to levels that do not substantially affect the viewing experience. As one example, the output image is non-linearly warped relative to the input image such that a distortion in the output image relative to the input image is greater in a corner region of the output image than a center region of the output image.

3. Foreign Counterparts

28. Pursuant to Commission Rule 210.12(a)(9)(v), Exhibit 13 lists each foreign patent, each pending foreign patent application, and each foreign patent application that has been denied, abandoned, or withdrawn corresponding to the ’413 patent, with an indication of the prosecution status of each such patent application. No other foreign patents or patent applications corresponding to the ’413 patent have been filed, abandoned, withdrawn, or rejected.

B. The ’052 Patent

1. Identification of the Patent and Ownership

29. GoPro owns by assignment the right, title, and interest in United States Patent No. 10,529,052, titled “Virtual Lens Simulation for Video and Photo Cropping.” The ’052 patent issued on January 7, 2020, and names David A. Newman, Joshua Edward Bodinet, Otto Kenneth Sievert, and Timothy Macmillan as co-inventors. The ’052 patent expires on May 17, 2036, and

claims priority to provisional United States Patent Application No. 62/164,409, filed on May 20, 2015.

30. Pursuant to Commission Rule 210.12(a)(9)(i), a certified copy of the ’052 patent is attached hereto as Exhibit 3. Pursuant to Commission Rule 210.12(a)(9)(ii), a certified copy of the assignment from the named inventors to GoPro is attached as Exhibit 4. Pursuant to Commission Rule 210.12(c)(1), a certified copy of the prosecution history of the ’052 patent is attached hereto as Appendix C. Pursuant to Commission Rule 210.12(c)(2), a copy of each patent and applicable pages of each technical reference mentioned in the prosecution history of the ’052 patent is attached hereto as Appendix D.

2. Non-Technical Description of the Patented Invention

31. The ’052 patent generally describes a system where a virtual lens is simulated when applying a crop or zoom effect to an input video. Specifically, the system receives an input video containing input lens distortion caused by the lens used to capture the input video that is centered on the field of view of the input video. When sub-frames (smaller fields of view) of the input video are selected—by, for example, a crop or zoom edit—the input lens distortion effects present in such sub-frames differ depending on the lens distortion in the input video and the location and size of the sub-frames within the input video field of view. The claimed system generates output video by remapping the sub-frames such that the input lens distortion effects present therein are transformed directly to the desired lens distortion that is centered on the sub-frames’ fields of view. This creates the appearance that the output video was captured using the reduced fields of view in the sub-frames instead of the field of view of the original input video.

3. Foreign Counterparts

32. Pursuant to Commission Rule 210.12(a)(9)(v), Exhibit 13 lists each foreign patent, each pending foreign patent application, and each foreign patent application that has been

denied, abandoned, or withdrawn corresponding to the ’052 patent, with an indication of the prosecution status of each such patent application. No other foreign patents or patent applications corresponding to the ’052 patent have been filed, abandoned, withdrawn, or rejected.

C. The ’894 Patent

1. Identification of the Patent and Ownership

33. GoPro owns by assignment the right, title, and interest in United States Patent No. 10,574,894, titled “Systems and Methods for Stabilizing Videos.” The ’894 patent issued on February 25, 2020, and names Thomas Derbanne, César Douady, and Maxim Karpushin as co-inventors. The ’894 patent expires on May 23, 2038, and claims priority to provisional United States Patent Application No. 62/673,388, filed on May 18, 2018.

34. Pursuant to Commission Rule 210.12(a)(9)(i), a certified copy of the ’894 patent is attached hereto as Exhibit 5. Pursuant to Commission Rule 210.12(a)(9)(ii), a certified copy of the assignment from the named inventors to GoPro is attached as Exhibit 6. Pursuant to Commission Rule 210.12(c)(1), a certified copy of the prosecution history of the ’894 patent is attached hereto as Appendix E. Pursuant to Commission Rule 210.12(c)(2), a copy of each patent and applicable pages of each technical reference mentioned in the prosecution history of the ’894 patent is attached hereto as Appendix F.

2. Non-Technical Description of the Patented Invention

35. The ’894 patent generally describes a means for stabilizing videos. Specifically, when a camera is subject to vibrations, bumps, or rapid movements while filming, the system seeks to smooth the resulting video in order to reduce or eliminate unwanted motion. The system achieves this result by analyzing the trajectory of the camera over time and applying video editing techniques to smooth the resulting video and thereby reduce shakiness.

3. Foreign Counterparts

36. Pursuant to Commission Rule 210.12(a)(9)(v), Exhibit 13 lists each foreign patent, each pending foreign patent application, and each foreign patent application that has been denied, abandoned, or withdrawn corresponding to the ’894 patent, with an indication of the prosecution status of each such patent application. No other foreign patents or patent applications corresponding to the ’894 patent have been filed, abandoned, withdrawn, or rejected.

D. The ’840 Patent

1. Identification of the Patent and Ownership

37. GoPro owns by assignment the right, title, and interest in United States Patent No. 10,958,840, titled “Systems and Methods for Stabilizing Videos.” The ’840 patent issued on March 23, 2021, and names Cesar Douady, Thomas Derbanne, and Maxim Karpushinas co-inventors. The ’840 patent expires on April 23, 2039, and claims priority to provisional United States Patent Application No. 62/733,237, filed on September 19, 2018.

38. Pursuant to Commission Rule 210.12(a)(9)(i), a certified copy of the ’840 patent is attached hereto as Exhibit 7. Pursuant to Commission Rule 210.12(a)(9)(ii), a certified copy of the assignment from the named inventors to GoPro is attached as Exhibit 8. Pursuant to Commission Rule 210.12(c)(1), a certified copy of the prosecution history of the ’840 patent is attached hereto as Appendix G. Pursuant to Commission Rule 210.12(c)(2), a copy of each patent and applicable pages of each technical reference mentioned in the prosecution history of the ’840 patent is attached hereto as Appendix H.

2. Non-Technical Description of the Patented Invention

39. The ’840 patent generally describes a means for stabilizing videos. Specifically, when a camera is subject to vibrations, bumps, or rapid movements while filming, the system

seeks to smooth the resulting video in order to reduce or eliminate unwanted motion. The system achieves this result by analyzing the trajectory of the camera over time and applying video editing techniques to smooth the resulting video and thereby reduce shakiness.

3. Foreign Counterparts

40. Pursuant to Commission Rule 210.12(a)(9)(v), Exhibit 13 lists each foreign patent, each pending foreign patent application, and each foreign patent application that has been denied, abandoned, or withdrawn corresponding to the ’840 patent, with an indication of the prosecution status of each such patent application. No other foreign patents or patent applications corresponding to the ’840 patent have been filed, abandoned, withdrawn, or rejected.

E. The ’832 Patent

1. Identification of the Patent and Ownership

41. GoPro owns by assignment the right, title, and interest in United States Patent No. 11,336,832, titled “Systems and Methods for Horizon Leveling Videos.” The ’832 patent issued on May 17, 2022, and names Daryl Stimm, Kyler William Schwartz, and Jonathan Leland Thorn as co-inventors. The ’832 patent expires on November 30, 2040, and claims priority to provisional United States Patent Application No. 62/894,649, filed on August 30, 2019.

42. Pursuant to Commission Rule 210.12(a)(9)(i), a certified copy of the ’832 patent is attached hereto as Exhibit 9. Pursuant to Commission Rule 210.12(a)(9)(ii), a certified copy of the assignment from the named inventors to GoPro is attached as Exhibit 10. Pursuant to Commission Rule 210.12(c)(1), a certified copy of the prosecution history of the ’832 patent is attached hereto as Appendix I. Pursuant to Commission Rule 210.12(c)(2), a copy of each patent and applicable pages of each technical reference mentioned in the prosecution history of the ’832 patent is attached hereto as Appendix J.

2. Non-Technical Description of the Patented Invention

43. The ’832 patent generally describes a system and method for leveling videos captured by a camera device in motion. Motion of a camera device during the capture of a video may cause the video to depict a tilted view of a scene. Thus, the disclosed system and method addresses this issue by obtaining video information, rotational position information, and other relevant data in order to generate horizon-leveled visual content. As one example, the horizon-leveled output video is generated by determining the placement of the viewing window within the field of view of the visual content as a function the rotational position information of the camera device.

3. Foreign Counterparts

44. Pursuant to Commission Rule 210.12(a)(9)(v), Exhibit 13 lists each foreign patent, each pending foreign patent application, and each foreign patent application that has been denied, abandoned, or withdrawn corresponding to the ’832 patent, with an indication of the prosecution status of each such patent application. No other foreign patents or patent applications corresponding to the ’832 patent have been filed, abandoned, withdrawn, or rejected.

F. The D’435 Patent

1. Identification of the Patent and Ownership

45. GoPro owns by assignment the right, title, and interest in United States Design Patent No. D789,435, titled “Camera.” The D’435 patent issued on June 13, 2017, and names Huy Phuong Nguyen, Richard Gioscia, Quinn Jerome Odette Fitzgerald, and William Duncan Webb II as co-inventors. The D’435 patent expires on June 13, 2032, and claims priority to United States Patent Application No. 29/545,934, filed on November 17, 2015.

46. Pursuant to Commission Rule 210.12(a)(9)(i), a certified copy of the D'435 patent is attached hereto as Exhibit 11. Pursuant to Commission Rule 210.12(a)(9)(ii), a certified copy of the assignment from the named inventors to GoPro is attached as Exhibit 12. Pursuant to Commission Rule 210.12(c)(1), a certified copy of the prosecution history of the D'435 patent is attached hereto as Appendix K. Pursuant to Commission Rule 210.12(c)(2), a copy of each patent and applicable pages of each technical reference mentioned in the prosecution history of the D'435 patent is attached hereto as Appendix L.

2. Description of the Patented Design

47. The D'435 patent claims an ornamental design for a camera, shown and described across 10 figures displaying the front, back, top, bottom, and sides of the camera. Some figures display features with broken lines, indicating that such features form no part of the claimed design.

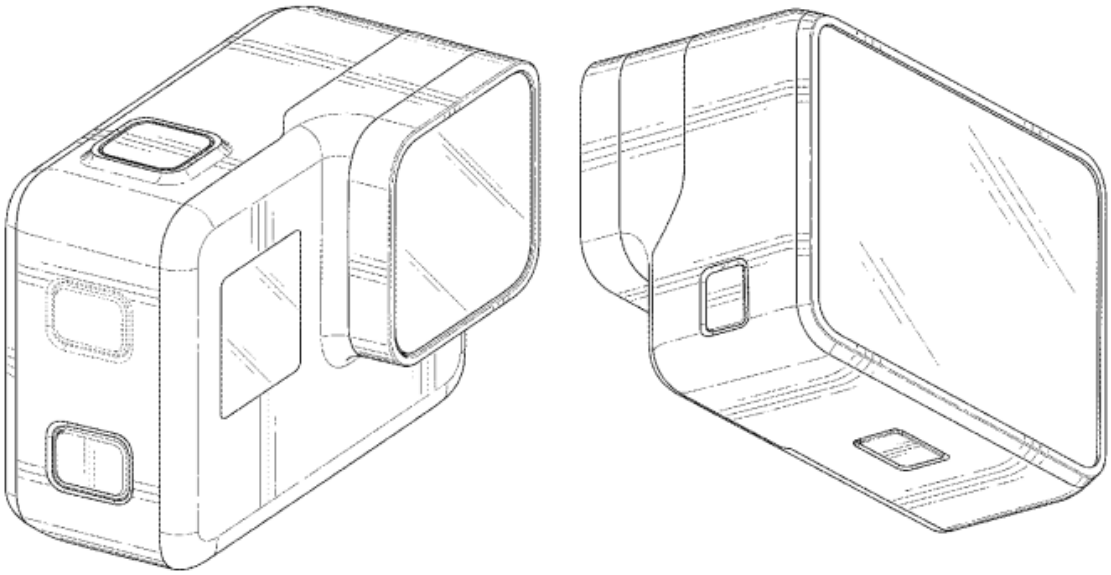

3. Foreign Counterparts

48. Pursuant to Commission Rule 210.12(a)(9)(v), no foreign patents or patent applications corresponding to the D'435 patent have been filed, abandoned, withdrawn, or rejected.

G. Licensees to the Asserted Patents

49. Pursuant to Commission Rule 210.12(a)(9)(iii), GoPro states that there are currently no licensees to the Asserted Patents.

VI. UNLAWFUL AND UNFAIR ACTS OF PROPOSED RESPONDENTS—PATENT INFRINGEMENT

50. On information and belief, the Proposed Respondents sell for importation into the United States, import into the United States, and/or sell within the United States after importation cameras, camera systems, and accessories used therewith that infringe one or more of the Asserted Patents, in violation of Section 337. The Accused Products include at least the following: Insta360 "ONE X," "ONE R," "ONE R 1-inch," "ONE X2," "ONE RS," "ONE RS 1-inch 360," "X3," "GO 3," "Ace," and "Ace Pro." The Accused Products themselves infringe the Asserted Patents by embodying and practicing the patented inventions.

51. The Proposed Respondents also induce and contribute to others' infringing use of the Accused Products—including use in connection with supporting applications such as mobile and desktop video editing and sharing applications (e.g., Insta360 Studio)—by actively marketing and selling the Accused Products with specific knowledge about how the products are used. The Proposed Respondents have had knowledge of the Asserted Patents at least as of the time they were served with GoPro's contemporaneous complaint in the United States District Court for the Central District of California alleging infringement of the Asserted Patents.

A. Direct Infringement

1. ’413 Patent

52. On information and belief, each Proposed Respondent sells for importation into the United States, imports into the United States, and/or sells within the United States after importation Accused Products that directly infringe the ’413 patent, literally or under the doctrine of equivalents.

53. Pursuant to Commission Rule 210.12(a)(9)(viii), exemplary claim charts comparing independent claims 1 and 2 of the ’413 patent to a representative Accused Product (Insta360 X3) are attached as Exhibit 14.

2. ’052 Patent

54. On information and belief, each Proposed Respondent sells for importation into the United States, imports into the United States, and/or sells within the United States after importation Accused Products that directly infringe the ’052 patent, literally or under the doctrine of equivalents.

55. Pursuant to Commission Rule 210.12(a)(9)(viii), exemplary claim charts comparing independent claim 1 of the ’052 patent to a representative Accused Product (Insta360 X3) are attached as Exhibit 15.

3. ’894 Patent

56. On information and belief, each Proposed Respondent sells for importation into the United States, imports into the United States, and/or sells within the United States after importation Accused Products that directly infringe the ’894 patent, literally or under the doctrine of equivalents.

57. Pursuant to Commission Rule 210.12(a)(9)(viii), exemplary claim charts comparing independent claims 1 and 11 of the ’894 patent to a representative Accused Product (Insta360 X3) are attached as Exhibit 16.

4. ’840 Patent

58. On information and belief, each Proposed Respondent sells for importation into the United States, imports into the United States, and/or sells within the United States after importation Accused Products that directly infringe the ’840 patent, literally or under the doctrine of equivalents.

59. Pursuant to Commission Rule 210.12(a)(9)(viii), exemplary claim charts comparing independent claims 1 and 16 of the ’840 patent to a representative Accused Product (Insta360 X3) are attached as Exhibit 17.

5. ’832 Patent

60. On information and belief, each Proposed Respondent sells for importation into the United States, imports into the United States, and/or sells within the United States after importation Accused Products that directly infringe the ’832 patent, literally or under the doctrine of equivalents.

61. Pursuant to Commission Rule 210.12(a)(9)(viii), exemplary claim charts comparing independent claim 1 of the ’832 patent to a representative Accused Product (Insta360 X3) are attached as Exhibit 18.

6. D’435 Patent

62. On information and belief, each Proposed Respondent sells for importation into the United States, imports into the United States, and/or sells within the United States after importation Accused Products that directly infringe the D’435 patent.

63. Insta360's blatant infringement of D'435 is a vivid example of the lengths Insta360 has gone to misappropriate GoPro's patented innovation and consumer goodwill.

GoPro's D'435 Design	GoPro HERO5[3]		Insta360 "Ace"	Insta360 "Ace Pro"
		→		
		→		
		→		
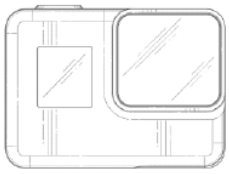		→		
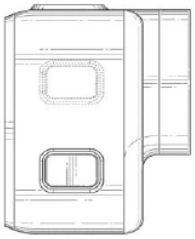		→		

[3] Subsequent GoPro products also embody GoPro's design of D'435.

64. Pursuant to Commission Rule 210.12(a)(9)(viii), exemplary claim charts comparing the ornamental camera design of the D'435 patent to the Accused Products are attached as Exhibit 19.

B. Indirect Infringement of the Asserted Utility Patents

65. On information and belief, the Proposed Respondents also knowingly induce and/or contribute to the infringement of the '413, '052, '894, '840, and '832 patents (the "Asserted Utility Patents") by actively encouraging others to make, use, offer to sell, sell, and/or import the Accused Products in the United States. The Proposed Respondents had knowledge of the Asserted Utility Patents, and their infringement of the Asserted Utility Patents, since at least the time they were served with GoPro's contemporaneous complaint in the United States District Court for the Central District of California alleging infringement of the Asserted Utility Patents. On information and belief, the Proposed Respondents actively promote the sale, use, and importation of the Accused Products in marketing materials, technical specifications, data sheets, web pages on their websites, press releases, and user manuals, as well as at trade shows and through their sales and distribution channels that encourage infringing sales, offers to sell, and importation of the Accused Products. *See e.g.*, Exhibit 20. By these actions, the Proposed Respondents have had the specific intent to induce, or were willfully blind to inducing infringement of the Asserted Utility Patents.

66. On information and belief, the Proposed Respondents also contribute to infringement of the Asserted Utility Patents by others, including purchasers who use the Accused Products, by providing and distributing the Accused Products, which are specially made or adapted for infringing use and not staple articles of commerce suitable for substantial non-infringing use. As discussed above, the Proposed Respondents have had actual knowledge of the Asserted Utility Patents since at least the time they were served with GoPro's contemporaneous

complaint in the United States District Court for the Central District of California alleging infringement of the Asserted Utility Patents.

VII. SPECIFIC INSTANCES OF UNFAIR IMPORTATION AND SALE

67. On information and belief, the Proposed Respondents, doing business as Insta360, sell Accused Products for importation into the United States, import Accused Products into the United States, and/or sell Accused Products in the United States after importation.

68. Exhibits 21-29 show receipts for purchase in the United States of representative Accused Products, including the Insta360 "ONE X," "ONE R," "ONE X2," "ONE RS," "ONE RS 1-inch 360," "X3," "GO 3," "Ace," and "Ace Pro." Exhibits 21-29 also show photographs of the packaging of the purchased products. The product packaging states that the products were "Made in China."[4]

VIII. RELATED LITIGATION

69. Concurrently with this Complaint, GoPro has filed a complaint in the United States District Court for the Central District of California asserting the Asserted Patents against the Proposed Respondents. There is no other related court or agency litigation between GoPro and the Proposed Respondents.

IX. HARMONIZED TARIFF SCHEDULE NUMBERS

70. On information and belief, the infringing Accused Products may be classified under at least the following heading and subheading of the Harmonized Tariff Schedule of the United States: 8525.89.40; 8525.89.50; 8525.89.20; 8525.89.30. These classifications are

[4] Where the product packaging only includes a model number and not both a model number and a SKU, public information shows which SKU (i.e., product marketing name) is associated with the model number shown on the product packaging. *See e.g.*, Exs. 21-23, 26.

intended for illustration only and are not intended to restrict the scope of any exclusion order or other remedy ordered by the Commission.

X. THE DOMESTIC INDUSTRY

71. A domestic industry as required by Section 337(a)(2) and defined by Section 337(a)(3) exists in the United States relating to articles protected by the Asserted Patents.

72. GoPro's HERO and MAX products (hereinafter "DI products") practice one or more claims of the Asserted Patents in the United States. Specifically, the following GoPro Products practice the Asserted Patents:

Patent No.	GoPro Product
'413 patent	HERO5 Black; HERO6 Black; HERO7 (Black, Silver, White); MAX; HERO8 Black; HERO9 Black; HERO10 Black; HERO11 Black; HERO11 Black Mini; HERO12 Black.
'052 patent	HERO7 Black; MAX; HERO8 Black; HERO9 Black; HERO10 Black; HERO11 Black; HERO11 Black Mini; HERO12 Black. Additionally, in connection with each of GoPro Studio version 2.5.6 and later ("GoPro Studio") and GoPro FX Reframe Adobe Plugin ("GoPro Adobe Plugin"), the following GoPro devices: HERO5 Black; HERO6 Black; HERO7 (Black, Silver, White); MAX; HERO8 Black; HERO9 Black; HERO10 Black; HERO11 Black; HERO11 Black Mini; HERO12 Black.
'894 patent	HERO7 Black; MAX; HERO8 Black; HERO9 Black; HERO10 Black; HERO11 Black; HERO11 Black Mini; HERO12 Black.
'840 patent	HERO7 Black; MAX; HERO8 Black; HERO9 Black; HERO10 Black; HERO11 Black; HERO11 Black Mini; HERO12 Black.
'832 patent	HERO9 Black; HERO10 Black; HERO11 Black; HERO11 Black Mini; HERO12 Black.
D'435 patent	HERO5 Black; HERO6 Black; HERO7 (Black, Silver, White); HERO8 Black; HERO9 Black; HERO10 Black; HERO11 Black; HERO12 Black.

73. Pursuant to Commission Rule 210.12(a)(9)(ix), claim charts applying an exemplary claim of each Asserted Patent to a representative DI product are attached as Exhibits 30C—35.[5]

74. GoPro has made significant and substantial investments in the United States to develop and commercialize the technology protected by the Asserted Patents and thus satisfies Section 337(a)(3)(A), (B), and/or (C). For example, GoPro has employed hundreds of engineers domestically and incurred hundreds of millions of dollars in product development-related expenditures for the DI products. GoPro undertakes product-centric work related to the DI products in the United States, including engineering, research and development, design, and product analytics and management. To undertake this work, GoPro has made and continues to make significant investments in plant and equipment, significant employment of labor and capital, and substantial investments in the exploitation of the inventions claimed in the Asserted Patents.

75. GoPro's domestic activities and investments directed to the Asserted Patents are detailed in Exhibit 36C.

XI. REQUESTED RELIEF

WHEREFORE, by reason of the foregoing, GoPro respectfully requests that the United States International Trade Commission:

A. Institute an immediate investigation pursuant to Section 337 of the Tariff Act of 1930, as amended, 19 U.S.C. § 1337, with respect to the Proposed Respondents' violations of that section arising from the importation into the United States, sale for importation into the

[5] The DI products are protected by additional claims of the Asserted Patents, and GoPro may establish the technical prong of the domestic industry requirement through claims other than those explicitly charted.

United States, and/or sale within the United States after importation of cameras, camera systems, and accessories used therewith that infringe one or more of the Asserted Patents;

B. Schedule and conduct a hearing pursuant to Section 337(c) for purposes of (i) receiving evidence and hearing argument concerning whether there has been a violation of Section 337, and (ii) following the hearing, to determine that there has been a violation of Section 337;

C. Issue a permanent limited exclusion order, pursuant to Section 337(d), forbidding entry into the United States of cameras, camera systems, and accessories used therewith that infringe one or more of the Asserted Patents and that are manufactured by or on behalf of the Proposed Respondents, their subsidiaries, related companies, and agents;

E. Issue permanent cease and desist orders, pursuant to Section 337(f), prohibiting each Proposed Respondent, its domestic subsidiaries, related companies, and agents from engaging in the importation, sale for importation, marketing and/or advertising, distribution, offering for sale, sale, use after importation, sale after importation, and other transfer within the United States of cameras, camera systems, and accessories used therewith that infringe one or more claims of the Asserted Patents;

F. Impose a bond, pursuant to Section 337(j), upon importation of cameras, camera systems, and accessories used therewith that infringe one or more of the Asserted Patents during the 60-day Presidential review period; and

H. Grant all such other and further relief as the Commission deems just and proper under the law, based upon the facts complained of herein and as determined by the investigation.

Dated: March 29, 2024

Respectfully submitted,

/s/ *S. Alex Lasher*
S. Alex Lasher
Michael R. Doman, Jr.
QUINN EMANUEL URQUHART & SULLIVAN LLP
1300 I Street, NW, Suite 900
Washington, D.C. 20005
Tel.: (202) 538-8000

Patrick T. Schmidt
QUINN EMANUEL URQUHART & SULLIVAN LLP
865 S Figueroa St, 10th Floor
Los Angeles, CA 90017
Tel.: (213) 443-3000

Sean S. Pak
QUINN EMANUEL URQUHART & SULLIVAN LLP
50 California Street, 22nd Floor
San Francisco, CA 94111
Tel.: (415) 875-6600

Nathan Hamstra
QUINN EMANUEL URQUHART & SULLIVAN LLP
191 N. Wacker Drive, Suite 2700
Chicago, Illinois 60606
Tel.: (312) 705-7400

Counsel for Complainant GoPro, Inc.

UNITED STATES INTERNATIONAL TRADE COMMISSION
WASHINGTON, D.C.

In the Matter of CERTAIN CAMERAS, CAMERA SYSTEMS, AND ACCESSORIES USED THEREWITH	Investigation No. 337-TA-___

VERIFICATION OF COMPLAINT

I, Tyler Gee, am authorized to execute this verification on behalf of GoPro, Inc. I have read the Complaint and am aware of its contents. To the best of my knowledge, information, and belief, and based upon a reasonable inquiry under the circumstances, I hereby declare under penalty of perjury under the laws of the United States of America that the following is true and correct:

1. The allegations contained in the Complaint are well grounded in fact and have evidentiary support, or are likely to have evidentiary support after a reasonable opportunity for further investigation or discovery;

2. The claims and other legal contentions set forth in the Complaint are warranted by existing laws or by a good faith, non-frivolous argument for extension, modification, or reversal of existing law, or by the establishment of new law; and

3. The Complaint is not being filed for any improper purpose, such as to harass or to cause unnecessary delay or needless increase in the cost of litigation.

Dated: March 29, 2024

Tyler Gee
Deputy General Counsel &
Assistant Corporate Secretary
GoPro, Inc.