US005581658A

United States Patent [19]

O'Hagan et al.

[11] Patent Number: 5,581,658

[45] Date of Patent: Dec. 3, 1996

[54] **ADAPTIVE SYSTEM FOR BROADCAST PROGRAM IDENTIFICATION AND REPORTING**

[75] Inventors: **Michael O'Hagan**; **Nadia K. O'Hagan**, both of LaJolla; **Frank E. Hines**, San Diego, all of Calif.

[73] Assignee: **Infobase Systems, Inc.**, Rancho Palo Verdes, Calif.

[21] Appl. No.: **167,646**

[22] Filed: **Dec. 14, 1993**

[51] **Int. Cl.**[6] **G06F 15/18**

[52] **U.S. Cl.** **395/22**; 395/2.41

[58] **Field of Search** 395/22, 24, 2.41

[56] **References Cited**

U.S. PATENT DOCUMENTS

3,810,156	5/1974	Goldman	340/347
4,230,990	10/1980	Lert, Jr. et al.	455/67
4,450,531	5/1984	Kenyon et al.	364/604
4,677,466	6/1987	Lert, Jr. et al.	358/84
4,697,209	9/1987	Kiewit et al.	358/84
4,739,398	4/1988	Thomas et al.	358/84
4,857,999	8/1989	Welsh	358/84
5,019,899	5/1991	Boles et al.	358/84
5,220,640	6/1993	Frank	395/22
5,306,893	4/1994	Morris et al.	395/22
5,308,915	5/1994	Ohya et al.	395/22
5,381,513	1/1995	Tsuboka	395/2.41
5,402,519	3/1995	Inoue et al.	395/22
5,426,745	6/1995	Baji et al.	395/22

FOREIGN PATENT DOCUMENTS

0210609A3	2/1987	European Pat. Off.	H04H 1/00
0510632A3	10/1992	European Pat. Off. .	
2559002	8/1985	France	H04B 1/00

Primary Examiner—George B. Davis
Attorney, Agent, or Firm—Bruce W. Greenhaus

[57] **ABSTRACT**

A computer-implemented method and system for monitoring, identifying, classifying and logging musical work performance broadcasts over the public airwaves. The system uses a neural network to classify specially-processed "retinal" signatures of the musical work performance. The neural network is trained for each musical work using a single noise-biased retinal sample of the spectral distribution of preselected dynamic features of the corresponding audio signal. A detection decision is made at the neural network output using fuzzy logic circuitry to compare results of predetermined thresholding. The system of this invention fully automates the real-time identification of broadcast musical work performances.

13 Claims, 13 Drawing Sheets

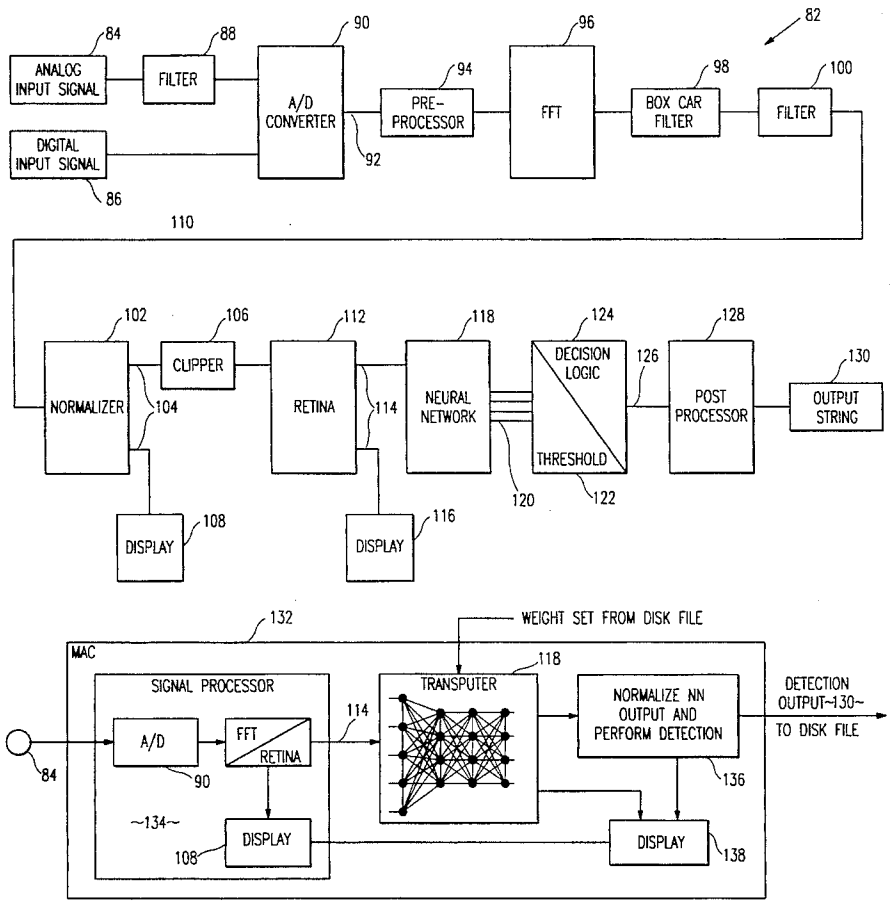

Roku EX1011
IPR2024-01053
U.S. Patent No. 8,296,791

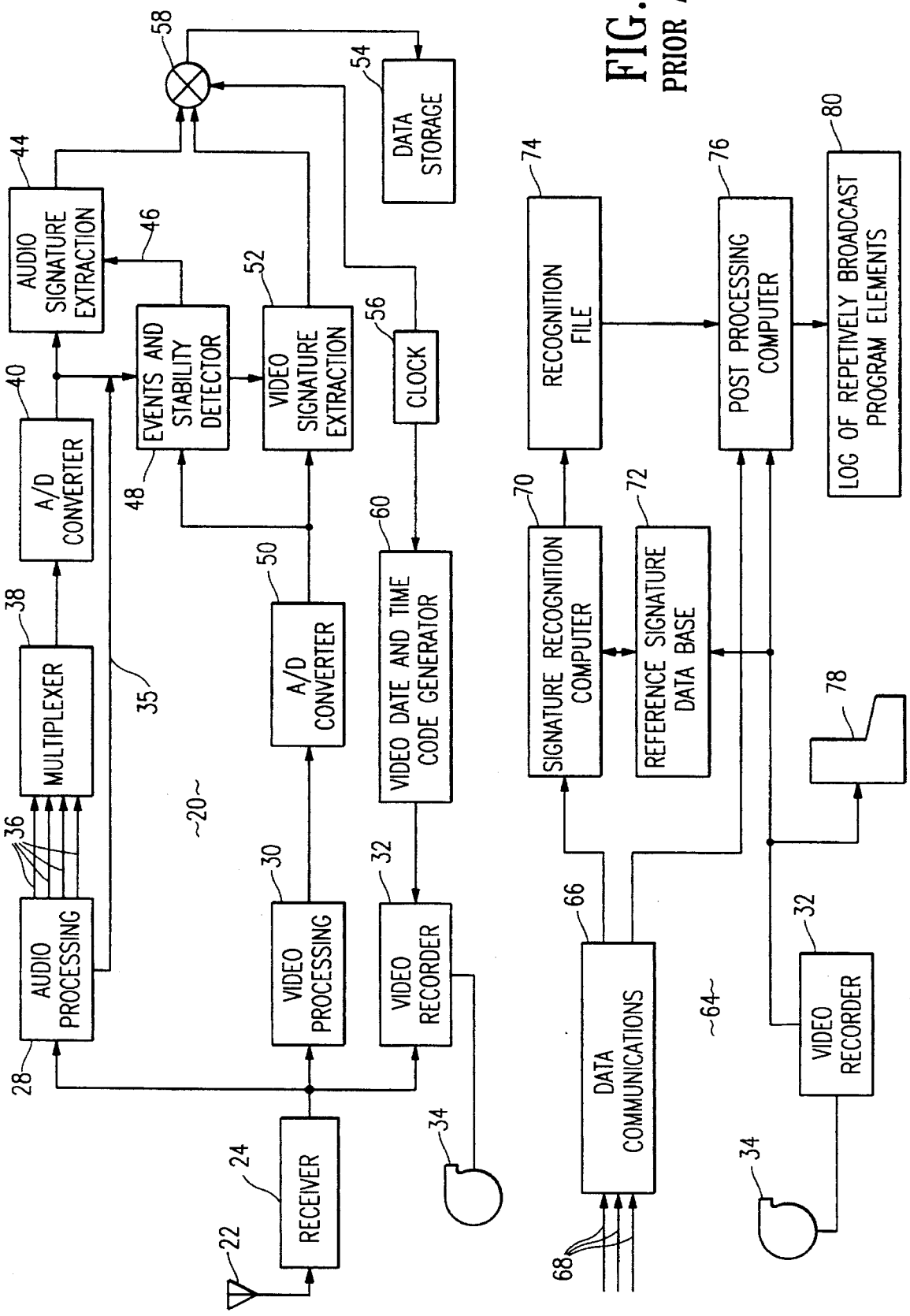

FIG. 1
PRIOR ART

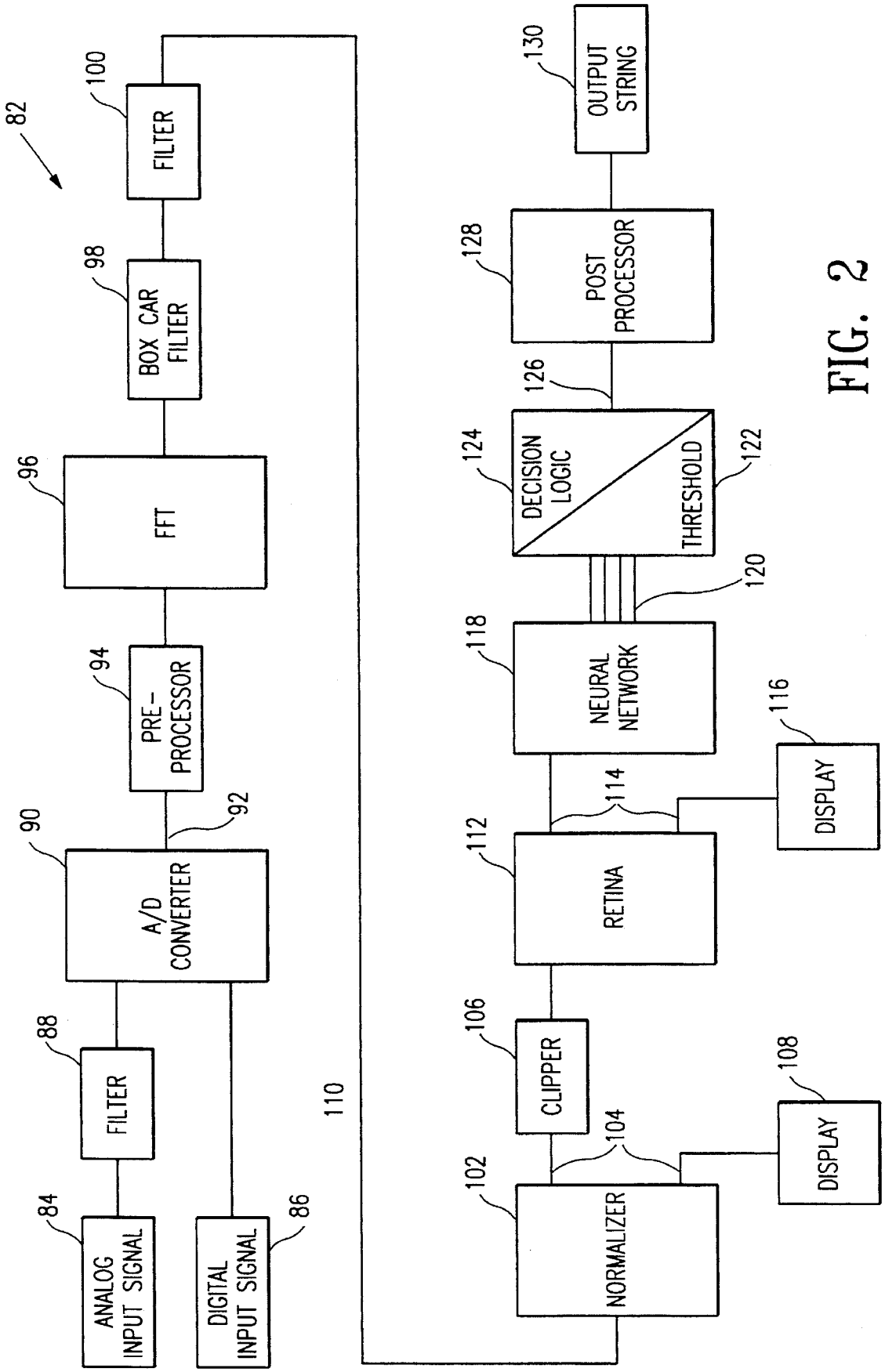
82
84
ANALOG INPUT SIGNAL
88
FILTER
86
DIGITAL INPUT SIGNAL
90
A/D CONVERTER
92
94
PRE-PROCESSOR
96
FFT
98
BOX CAR FILTER
100
FILTER
110
102
NORMALIZER
104
106
CLIPPER
108
DISPLAY
112
RETINA
114
116
DISPLAY
118
NEURAL NETWORK
120
124
DECISION LOGIC
122
THRESHOLD
126
128
POST PROCESSOR
130
OUTPUT STRING

FIG. 2

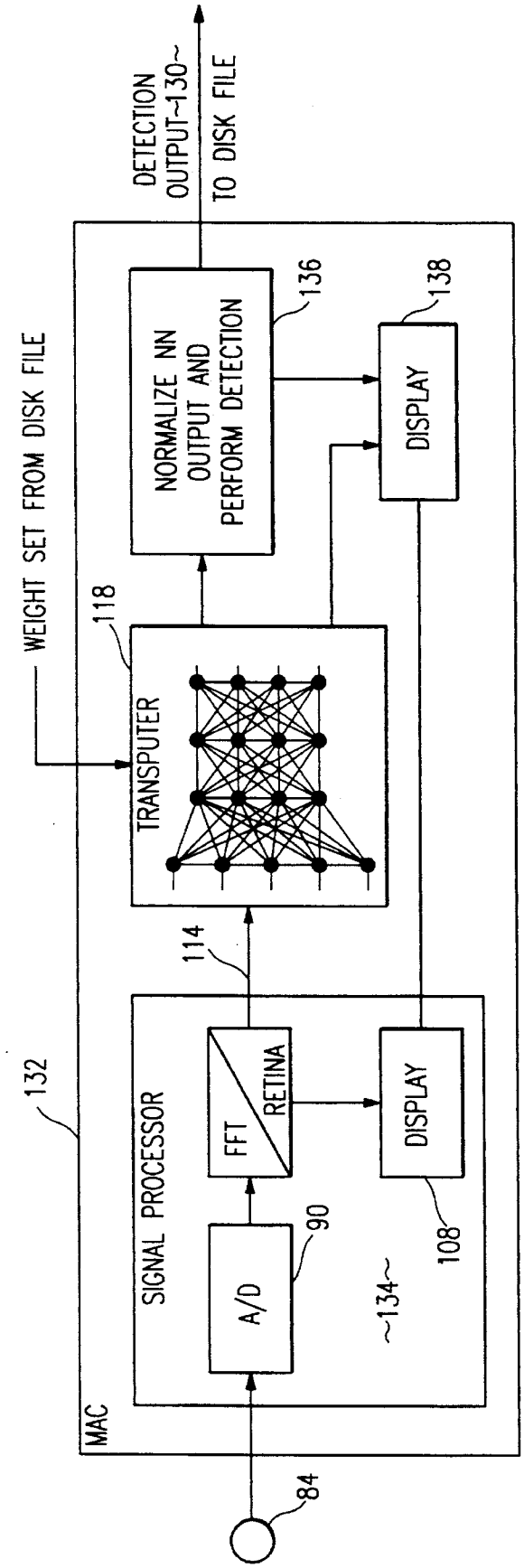

FIG. 3

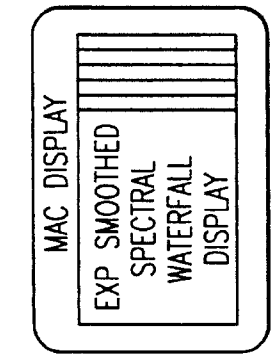

FIG. 4D

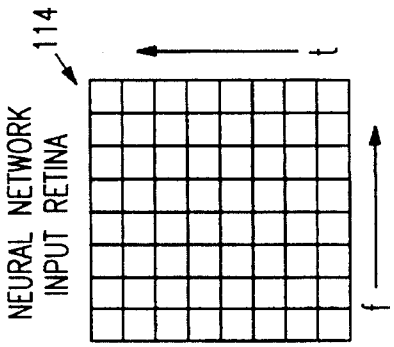

FIG. 4C

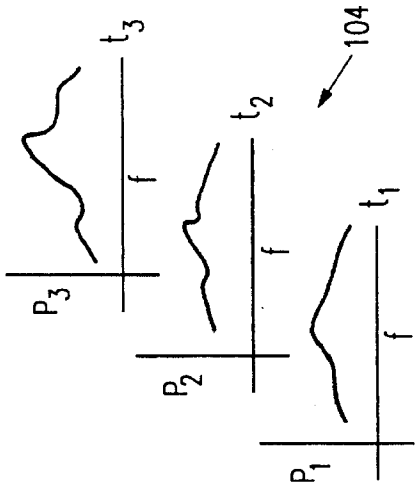

FIG. 4B

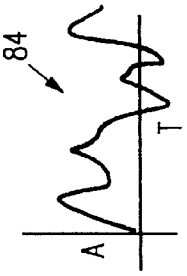

FIG. 4A

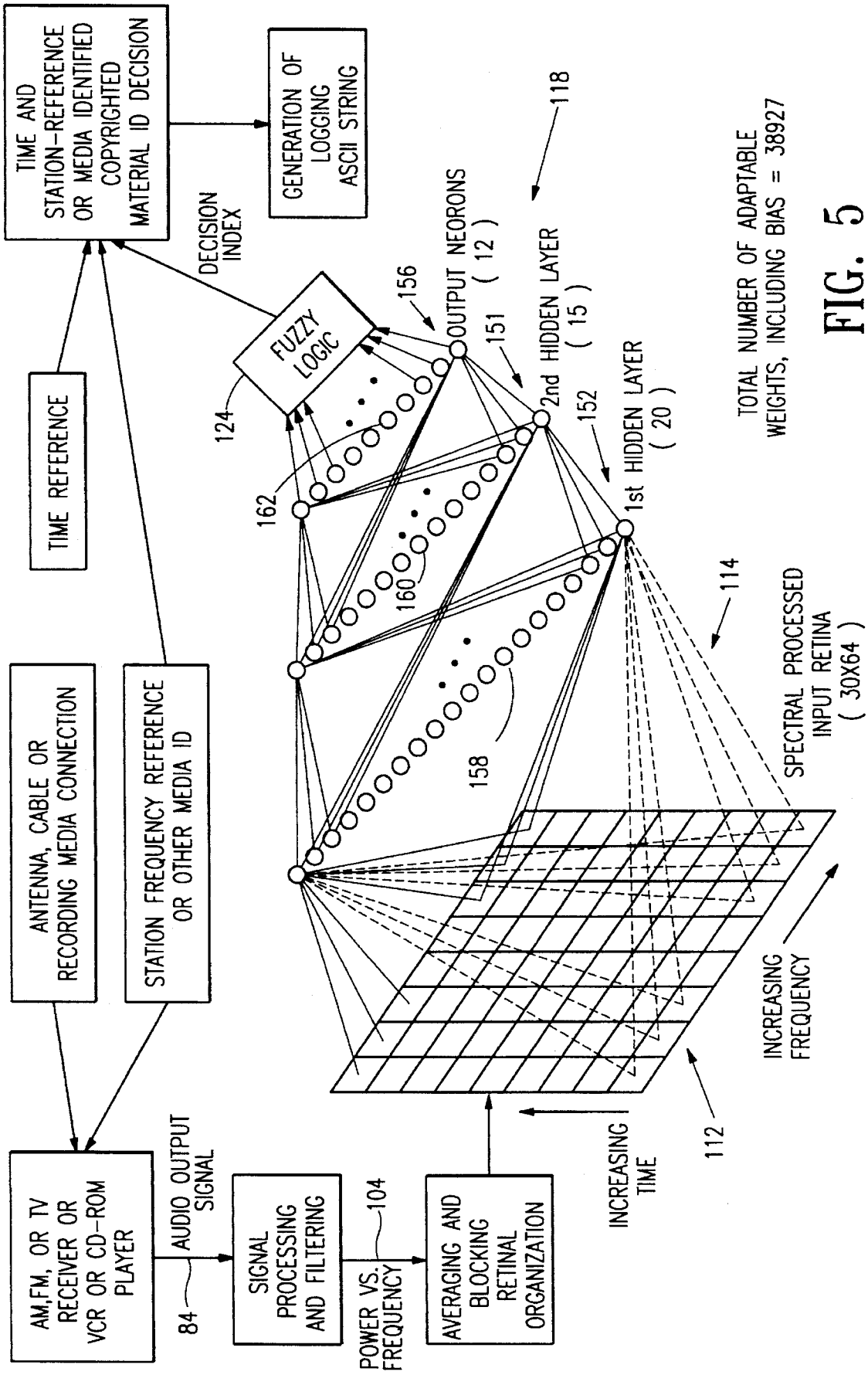
TIME AND STATION-REFERENCE OR MEDIA IDENTIFIED COPYRIGHTED MATERIAL ID DECISION
GENERATION OF LOGGING ASCII STRING
DECISION INDEX
FUZZY LOGIC
124
TIME REFERENCE
ANTENNA, CABLE OR RECORDING MEDIA CONNECTION
STATION FREQUENCY REFERENCE OR OTHER MEDIA ID
AM,FM, OR TV RECEIVER OR VCR OR CD-ROM PLAYER
84
AUDIO OUTPUT SIGNAL
SIGNAL PROCESSING AND FILTERING
POWER VS. FREQUENCY
104
AVERAGING AND BLOCKING RETINAL ORGANIZATION
INCREASING TIME
112
INCREASING FREQUENCY
SPECTRAL PROCESSED INPUT RETINA (30X64)
114
1st HIDDEN LAYER (20)
152
2nd HIDDEN LAYER (15)
151
OUTPUT NEORONS (12)
156
118
162
160
158
TOTAL NUMBER OF ADAPTABLE WEIGHTS, INCLUDING BIAS = 38927

FIG. 5

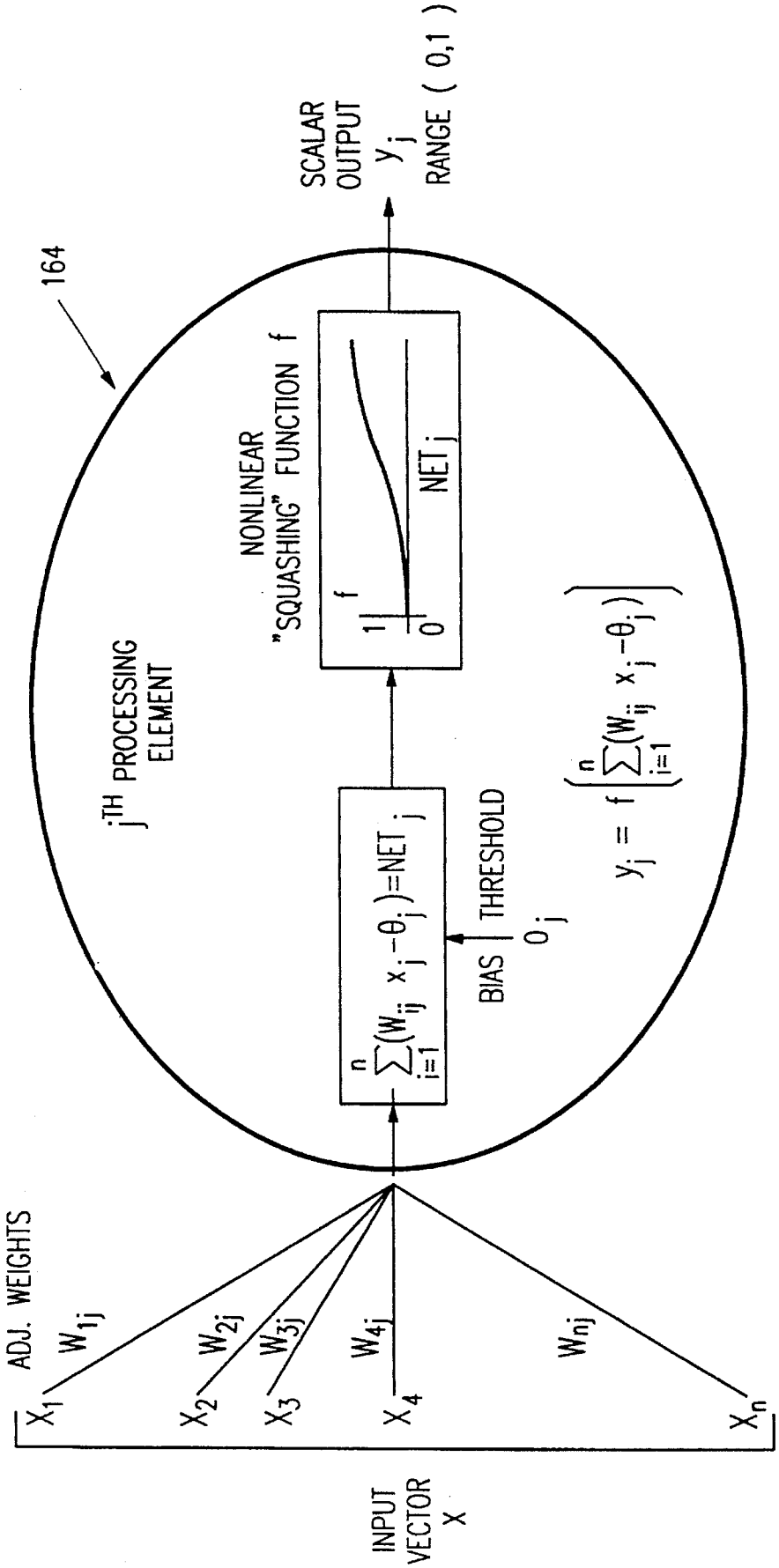

NEURAL NETWORK PROCESSING ELEMENT

FIG. 6

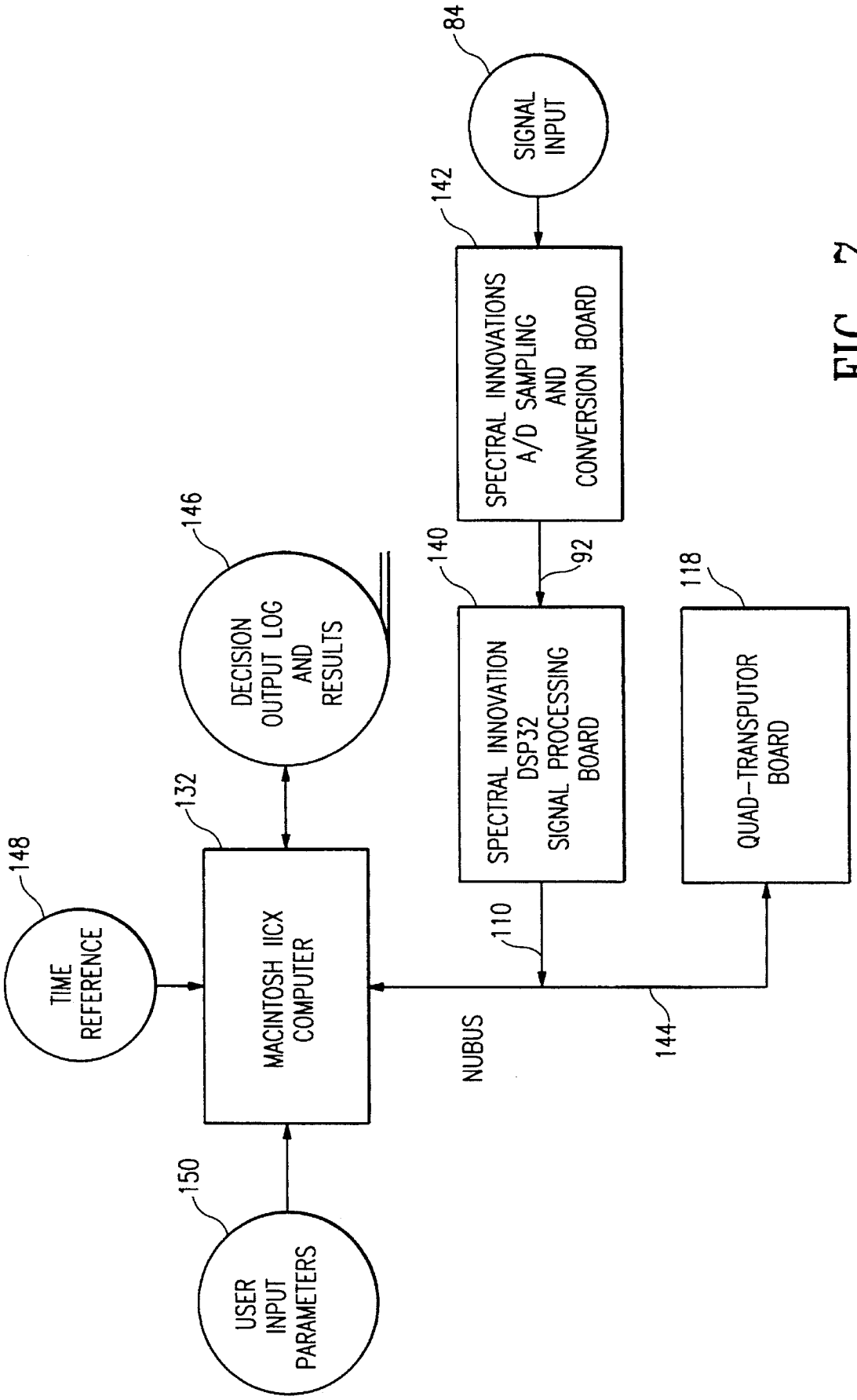
84
SIGNAL INPUT
142
SPECTRAL INNOVATIONS A/D SAMPLING AND CONVERSION BOARD
92
140
SPECTRAL INNOVATION DSP32 SIGNAL PROCESSING BOARD
118
QUAD-TRANSPUTOR BOARD
146
DECISION OUTPUT LOG AND RESULTS
132
MACINTOSH IICX COMPUTER
148
TIME REFERENCE
150
USER INPUT PARAMETERS
110
NUBUS
144

FIG. 7

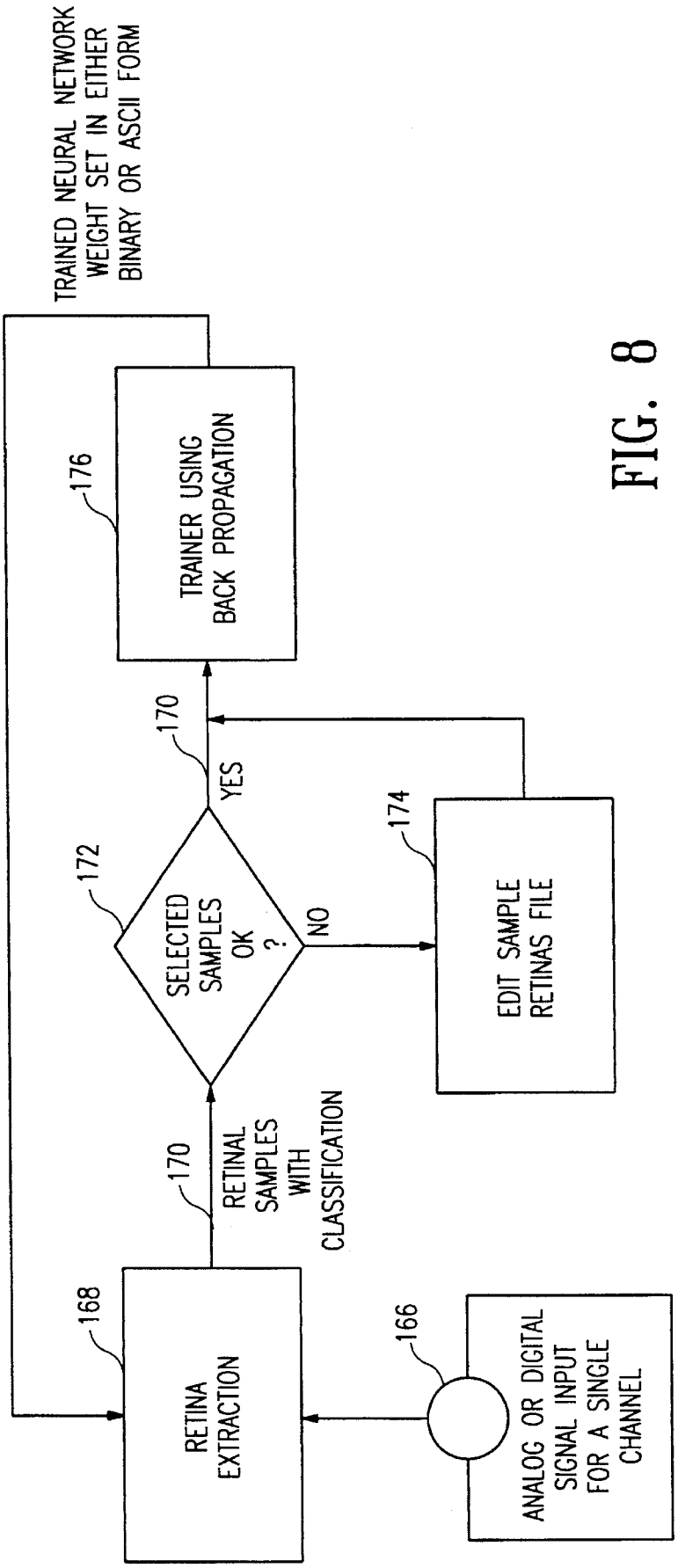
TRAINED NEURAL NETWORK WEIGHT SET IN EITHER BINARY OR ASCII FORM
176
TRAINER USING BACK PROPAGATION
170
YES
172
SELECTED SAMPLES OK ?
NO
174
EDIT SAMPLE RETINAS FILE
170
RETINAL SAMPLES WITH CLASSIFICATION
168
RETINA EXTRACTION
166
ANALOG OR DIGITAL SIGNAL INPUT FOR A SINGLE CHANNEL

FIG. 8

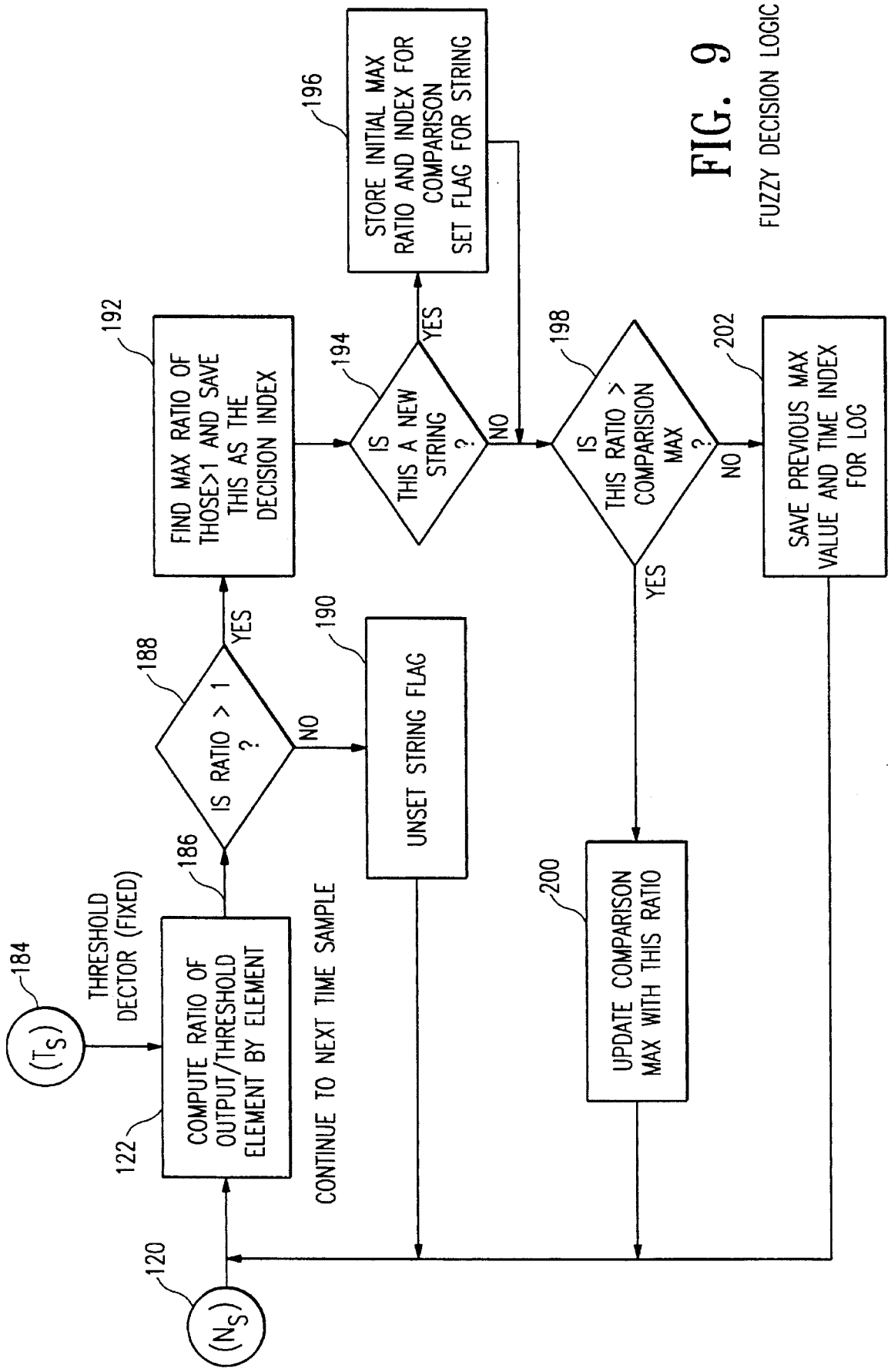

FIG. 9

FUZZY DECISION LOGIC

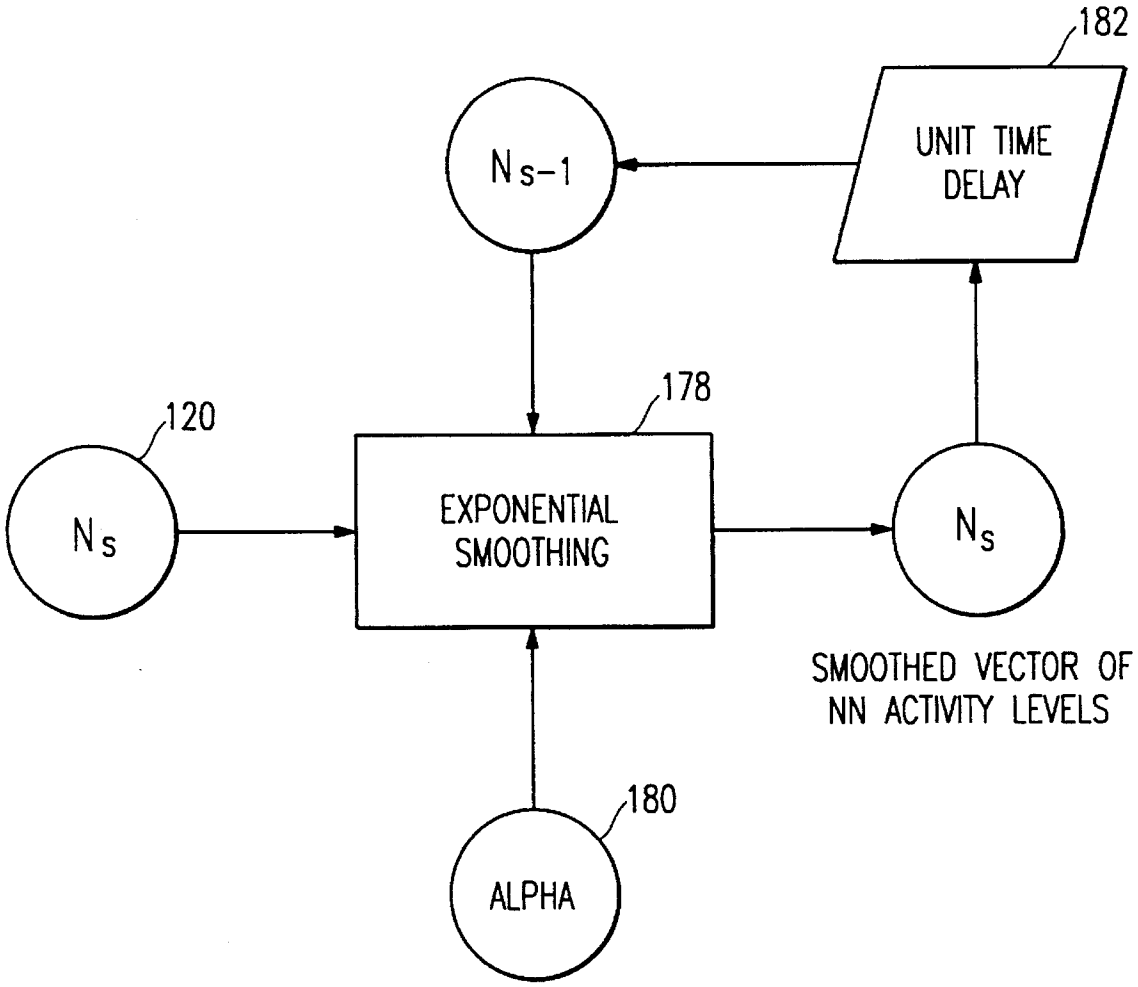
182
UNIT TIME DELAY
N_{s-1}
178
120
N_s
EXPONENTIAL SMOOTHING
N_s
SMOOTHED VECTOR OF NN ACTIVITY LEVELS
180
ALPHA

FIG. 10

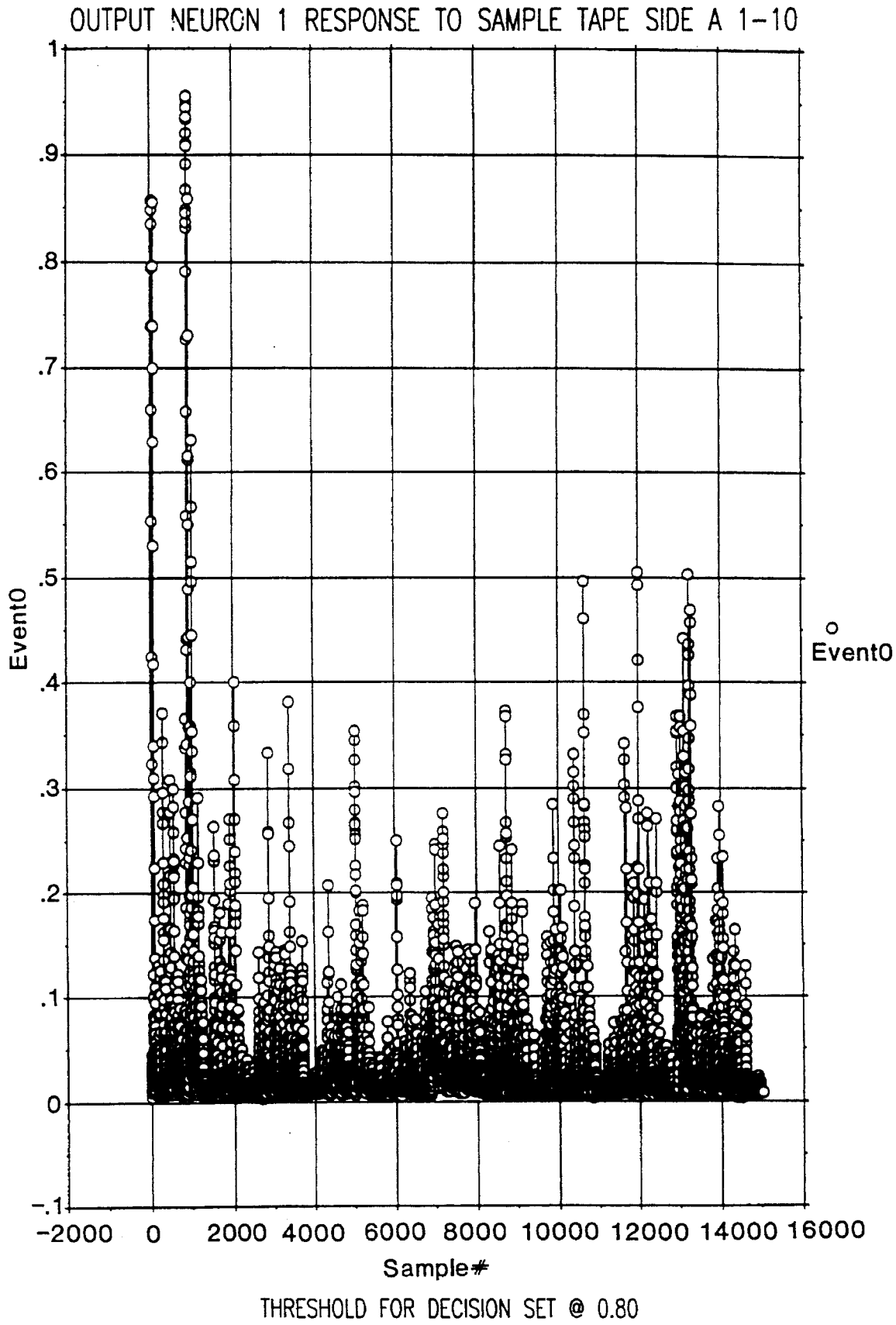
OUTPUT NEURON 1 RESPONSE TO SAMPLE TAPE SIDE A 1-10
1
.9
.8
.7
.6
.5
.4
.3
.2
.1
0
-.1
Event0
Event0
-2000
0
2000
4000
6000
8000
10000
12000
14000
16000
Sample#
THRESHOLD FOR DECISION SET @ 0.80

FIG. 11A

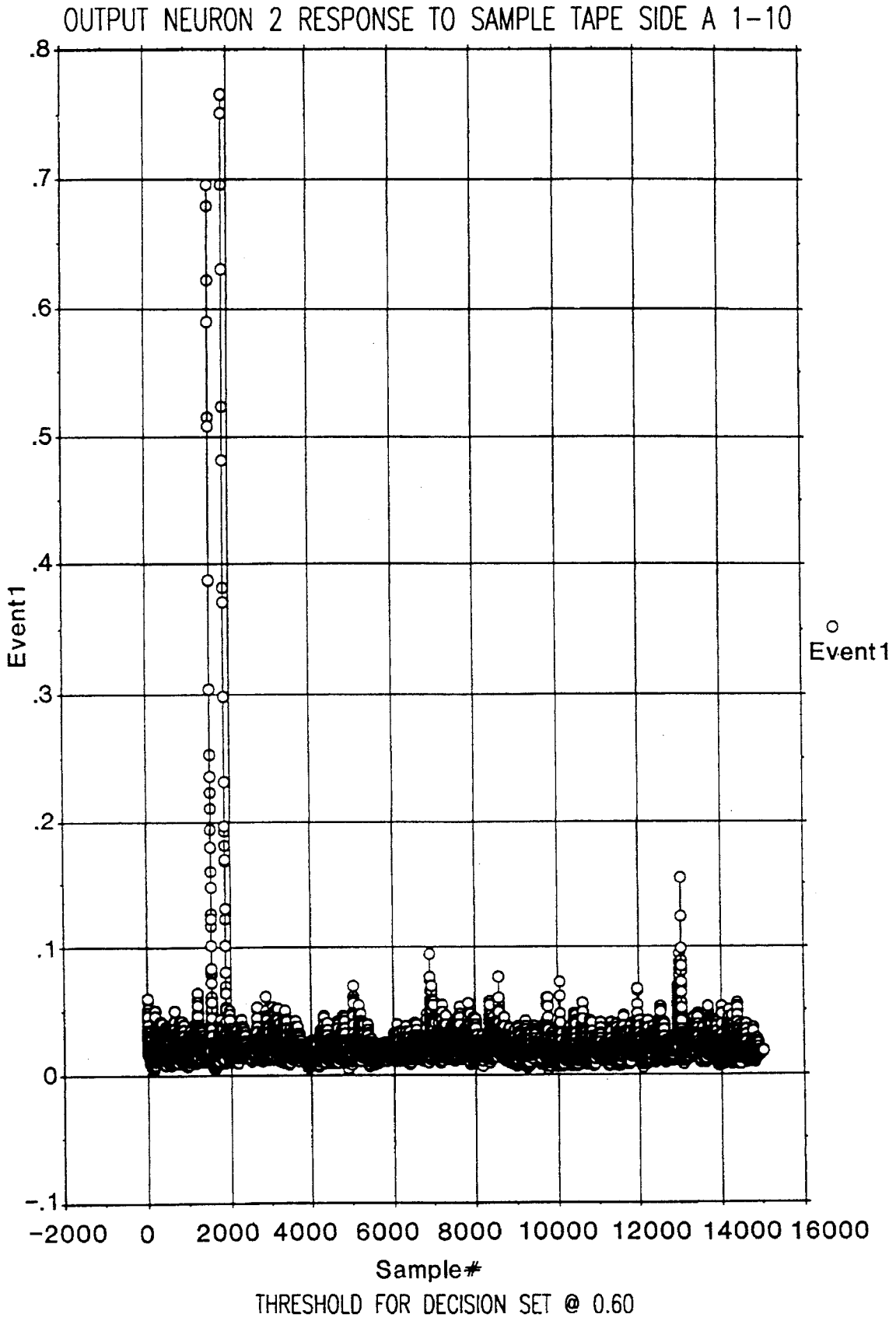
OUTPUT NEURON 2 RESPONSE TO SAMPLE TAPE SIDE A 1-10
.8
.7
.6
.5
.4
.3
.2
.1
0
-.1
Event1
Event1
-2000
0
2000
4000
6000
8000
10000
12000
14000
16000
Sample#
THRESHOLD FOR DECISION SET @ 0.60

FIG. 11B

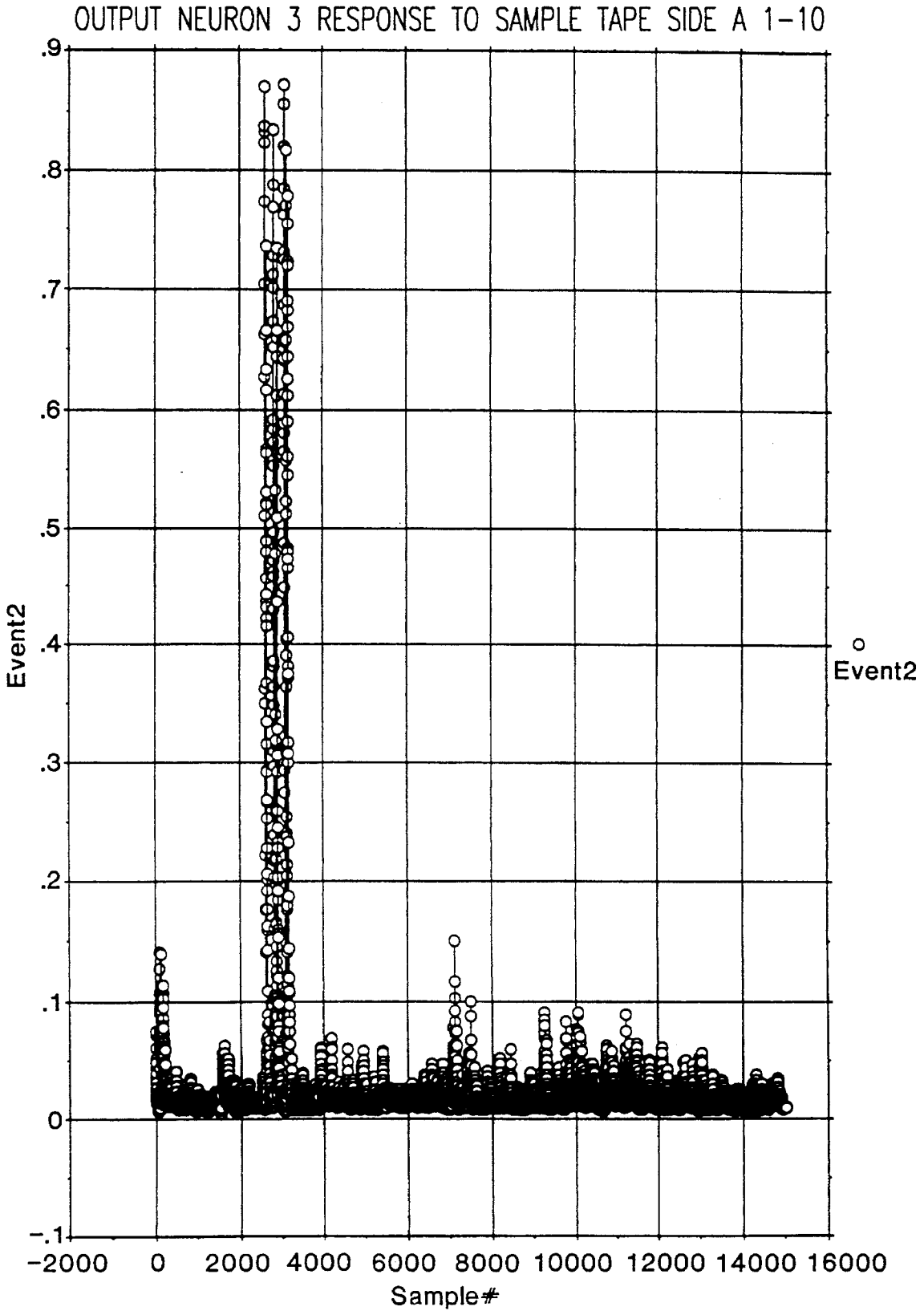

THRESHOLD FOR DECISION SET @ 0.75

FIG. 11C

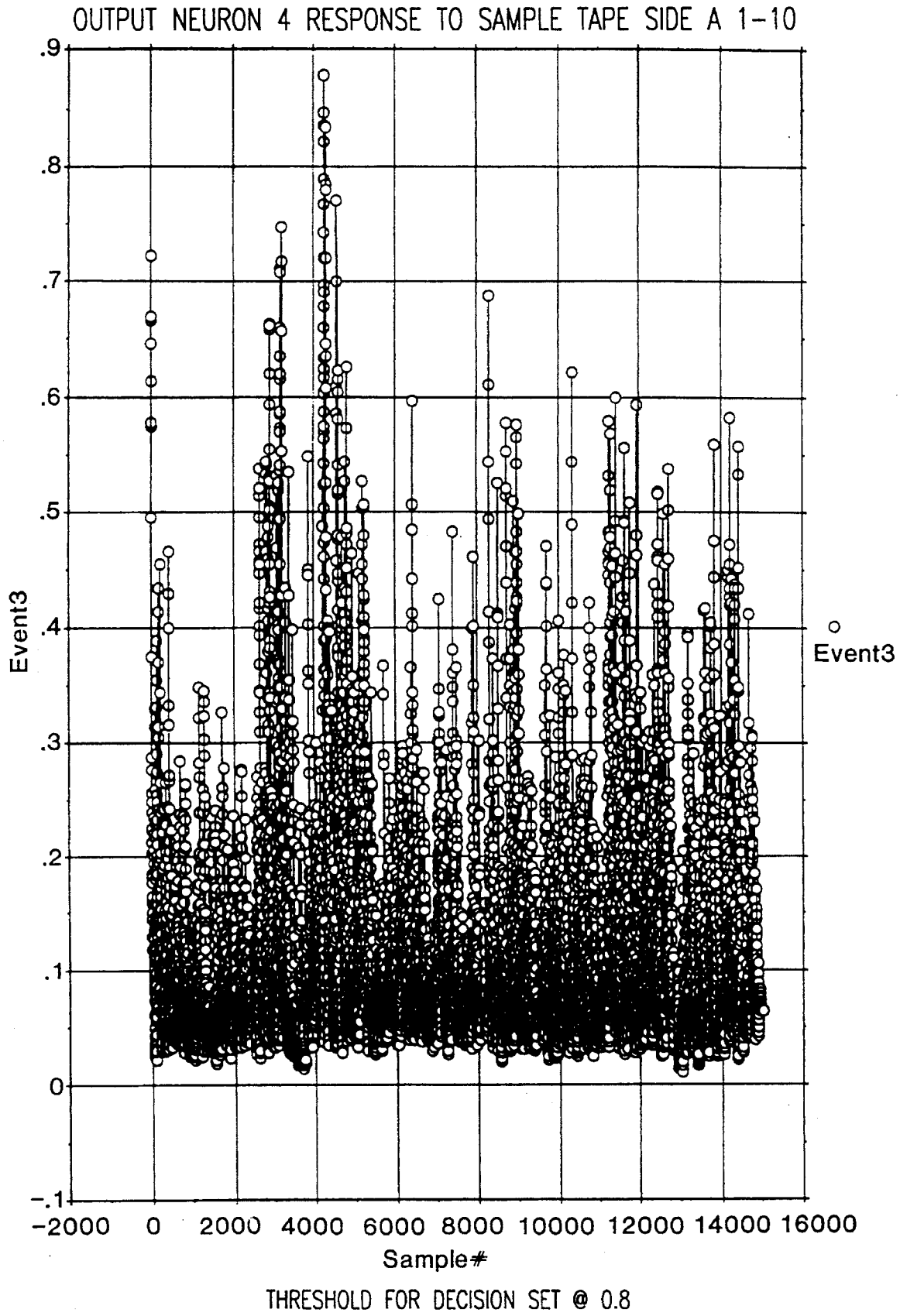
OUTPUT NEURON 4 RESPONSE TO SAMPLE TAPE SIDE A 1-10
.9
.8
.7
.6
.5
.4
.3
.2
.1
0
-.1
Event3
Event3
-2000
0
2000
4000
6000
8000
10000
12000
14000
16000
Sample#
THRESHOLD FOR DECISION SET @ 0.8

FIG. 11D

ADAPTIVE SYSTEM FOR BROADCAST PROGRAM IDENTIFICATION AND REPORTING

BACKGROUND OF THE INVENTION

1. Field of the Invention

This invention relates generally to methods and apparatus for identifying broadcast programs and particularly to the automatic identification and reporting of broadcast performances of musical works, commercials and the like.

2. Discussion of the Related Art

The broadcast industry requires accurate monitoring and reporting of broadcast programming for a variety of economic purposes. Advertising revenues are often computed as a direct function of audience numbers estimated by means of broadcast program monitoring systems. Commercial advertising revenue also depends on the number of commercial repetitions and the precise commercial broadcast day, hour and minute. Licensing revenues are computed based on the number of broadcast performances of the underlying work, such as a musical recording, movie or syndicated feature program.

There are many systems known in the art for identifying and verifying the broadcast performances of various works, whether commercials, musical works or feature works. These systems can be broadly characterized as manual and automated.

Manual monitoring and reporting systems require human operators to review recorded broadcast signals, to recognize and identify each broadcast performance and to log the work identification and the broadcast date and time. Even with the assistance of computer-implemented logging and reporting systems, such manual monitoring schemes are labor-intensive and therefore very expensive to operate. Moreover, reliance on manual techniques introduces an uncontrollable source of error in the resulting broadcast performance reports.

Automated monitoring and reporting systems for broadcast programming can be broadly characterized as cooperative and unilateral. Cooperative electronic monitoring systems rely on special coding signals embedded in the broadcast programming for accurate recognition and identification of individual works.

Cooperative systems that detect identification signals embedded in the broadcast signal require the cooperation of the broadcasters, who must encode the broadcast of each program for such systems to be effective. Because of financial conflicts-of-interest between the broadcaster and the advertiser or licensor, any cooperative monitoring and reporting system that relies on broadcaster cooperation introduces uncontrollable credibility problems in the monitoring reports.

In U.S. Pat. No. 4,857,999, Russell J. Welsh discloses a broadcast commercial monitoring system that identifies commercials by detecting closed-caption characters and extracting identifiable signatures therefrom. Welsh's system is intended to verify commercial broadcast frequency for advertising billing purposes and relies on the closed-caption signal for the hearing-impaired that is embedded in the commercial for purposes other than cooperative broadcast monitoring. Because this embedded signal is easily decoded into a series of digital characters, Welsh's system provides accurate identification without extensive computational effort. However, Welsh neither considers nor discusses the problem of identifying performances of musical works or the like that do not include such embedded signals.

In recent years, completely automatic unilateral broadcast signal identification systems have been disclosed that require no special coding of the broadcast signal. These unilateral monitoring systems rely on signal processing techniques to extract a "signature" from the broadcast signal for use in identification of the broadcast work by comparing it to a predetermined library of signatures.

For instance, in U.S. Pat. No. 3,810,156, Robert N. Goldman discloses a signal identification system that uses a concise digital "signature" developed by accumulating several broadcast signal samples. Although Goldman's system does not require embedded code signals, he merely suggests converting each two seconds of broadcast signal into a single digital number and neither considers nor suggests techniques for overcoming the inherent inaccuracies of such a technique, preferring to rely on the supposed benefits of aggregation over many samples.

In U.S. Pat. No. 4,739,398, William L. Thomas et al. discloses a system for recognizing broadcast segments such as commercials by applying continuous pattern recognition to signals derived from the broadcast signal representing strategically-selected regions of each video frame. Similarly to Goldman. Thomas et al. extract a signature using a parameter mask and consult a library for comparison and identification. They do not suggest means for overcoming the inherent inaccuracies of such comparison methods introduced by errors arising from mismatched timing, loss of synchronization and random noise.

In U.S. Pat. No. 4,450,531, Stephen C. Kenyon et al. disclose a broadcast signal recognition system and method that obtains signal correlation of a plurality of reference and broadcast signal segments. Kenyon et al. teach that signal disturbances such as noise bursts or dropout can be overcome by relying on a test for coincidence between many separate signal portions and reference signals. However, Kenyon et al. require very substantial signal processing resources to handle the multiple cross-correlations of broadcast signal segments required for their technique, and do not suggest effective means for overcoming problems introduced by program truncation and timing errors.

In U.S. Pat. No. 4,230,990, John G. Lert, Jr. et al. disclose a broadcast program identification system that extracts signatures responsive to either a natural or inserted "cue" and then compares the signature with a large library for identification. In U.S. Pat. No. 4,677,466, Lert et al. improve on the earlier identification system by extracting a signature responsive to a finding of "stability" in the signal as determined by comparing "events" in sequence. These events include such things as the signal blanking indicating a switch to commercial and the like. Their system is disclosed as shown in FIG. **1** herein where the improvement is the comparison of subsequent events to determine a stability condition, thereby eliminating the requirement for embedded cues. In U.S. Pat. No. 4,697,209, David A. Kiewit et al. disclose the application of the Lert, Jr. et al. technique to in-home monitoring of television viewer activity by means of a local system that monitors all program viewing in the home, whether received via broadcast or produced in a local video cassette player. Neither Lert et al. nor Kiewit et al. suggest how to overcome the inherent inaccuracies of their methods arising from errors introduced in the broadcast signal that hinder accurate comparison of other "signatures" with the corresponding library reference signals.

Single and multiple reference segment signal identification systems can theoretically operate effectively where

ideal signal conditions prevail, but such systems are relatively ineffective under typical broadcast operational conditions. For example, with intermittent signal dropout, a single segment correlation may be severely degraded and thereby result in failure to indicate correspondence of the broadcast and reference signals when correspondence does in fact exist. Measures intended to accommodate such intermittent errors can introduce unacceptable levels of "false" identification of the target work.

With broadcast music programs, speed variations between the same musical work played by different broadcast stations may be so extreme that even the use of sub-audio techniques known in the art for single reference segment systems give inadequate performance. Known broadcast signal identification systems cannot cope effectively with substantial music speed variations. It has been found that disk jockeys, to create desired effect, are quite likely to vary recording playback speeds to control playback duration time and to segue into and out of a popular musical work, thereby omitting portions of the recording at the beginning and end. Even under ideal conditions, signal processing methods that rely on simple linear cross-correlation techniques introduce high "false alarm" identification rates that reduce overall monitoring and logging system performance to less than 60% effectiveness. Even the most effective of such systems requires enormous processing power and very large signature library storage capacity, thereby making such systems disadvantageously expensive.

Accordingly, there is a clearly-felt need in the art for a broadcast performance monitoring and reporting system that can provide reports of the time and date of actual broadcast performances of identified works, such as recorded music, commercials and the like with substantially improved effectiveness at substantially reduced cost. The related unresolved problems and deficiencies are clearly felt in the art and are solved by our invention in the manner described below.

SUMMARY OF THE INVENTION

Our broadcast performance monitoring system solves many of the above problems by combining improved reference sampling techniques and a new "retinal" sample architecture with neural network training and recognition procedures and a fuzzy logic decision method. Our monitoring system is made "adaptive" by using a noisy reference sample to "train" a neural network to recognize a performance of each of many target works. Each performance sample is obtained by filtering out selected steady-state components of the performance to emphasize the "dynamic" features of the musical work. These dynamic musical features are then organized into a series of retinal samples each having an architecture suitable for "recognition" by a trained neural network. Recognition output signals are evaluated by fuzzy logic to obtain the most probable musical work identification, and the results are stored in a logging system.

It is an object of our invention to provide an automated method, apparatus and system for monitoring and logging broadcast performances of musical works and the like that does not rely on the insertion of special codes or on synchronization with predictable cues in the broadcast signal. It is an advantage of our system that a neural network trained with a single retinal sample selected from the intermediate portion of a musical work performance provides high recognition over all portions of that musical work. This feature arises from the unexpectedly advantageous observation that the dynamic elements of a musical performance, when organized into a "retinal" sample architecture, from a characteristic pattern that is recognizable throughout the entire performance of a particular musical work.

It is another object of our system to provide continual real-time reports of broadcast performances of musical works and the like efficiently and economically without resorting to supercomputers or expensive data storage facilities. It is an advantage of our system that real-time monitoring and identification of musical works can be accomplished using hardware as simple as a Macintosh computer modified by the addition of inexpensive digital signal processing cards and a Quad-Transputor neural network.

It is yet another object of our system to provide broadcast performance identification reliability of 90% or better. It is a feature of the system of our invention that high identification rates are achieved without high "false alarm" rates through predetermined thresholding and fuzzy-logic decision techniques.

The foregoing, together with other objects, features and advantages of our invention, will become more apparent when referring to the following specification, claims and the accompanying drawing.

BRIEF DESCRIPTION OF THE DRAWING

For a more complete understanding of our invention, we now refer to the following detailed description of the embodiments as illustrated in the accompanying drawing wherein:

FIG. **1** shows a functional block diagram of a typical automated broadcast program monitoring and reporting system from the prior art;

FIG. **2** shows a functional block diagram of the adaptive broadcast performance monitoring system of this invention;

FIG. **3** shows a functional block diagram of the signal processing portion of the system from FIG. **2**;

FIGS. **4A**, **4B**, **4C** and **4D** show several illustrative signals at various stages during the processing of the subsystem from FIG. **3**;

FIG. **5** shows a functional block diagram of the neural network element of this invention;

FIG. **6** illustrates a single neural network processing element used in the subsystem from FIG. **5**;

FIG. **7** shows a functional block diagram of a preferred embodiment of the system from FIG. **2**;

FIG. **8** is a block diagram illustrating the neural network training method used with the system of this invention;

FIG. **9** is a functional block diagram of an illustrative embodiment of the fuzzy decision logic of this invention;

FIG. **10** illustrates the exponential smoothing procedure used to smooth the neural network output signals presented to the fuzzy decision logic from FIG. **9**; and

FIGS. **11A**, **11B**, **11C** and **11D** provide exemplary identification decision outputs for selected musical work performances using the system from FIG. **7**.

DESCRIPTION OF THE PREFERRED EMBODIMENT

The Prior Art

FIG. **1** provides a block diagram of a typical unilateral broadcast program identification system from the prior art. The station monitoring unit **20** receives television broadcast

signals from a receiving antenna **22**. Antenna **22** could also represent a broadcast radio antenna. Signals from antenna **22** are applied to a receiver **24**, which includes a tuner and amplifier (not shown). Receiver **24** is tuned to the monitored broadcast station and the desired program signal **26** is produced at the output of receiver **24**. Program signal **26** is applied to the audio processing circuitry **28**, to the video processing circuitry **30** and to a recorder **32**, wherein program signal **26** is recorded on a storage medium **34**.

Audio processing circuitry **28** includes an energy detector and a plurality of band pass filters (not shown) and provides a detected energy signal **35** and a plurality of audio signals **36** each representing the energy of signal **26** within a specified frequency band. Audio spectrum signals **36** are applied to the multiplexer **38**, which connects each signal **26** in turn to the A/D converter **40**, thereby producing the digitized multiplexed audio signals **42**. Digitized audio signals **42** are applied to both an audio signature extraction circuit **44** and to an events detector **48**. Events detector **48** produces an output signal **46** that enables audio signature extraction circuit **44** to extract an audio signature from digitized audio signals **32**. Video processing circuitry **30** provides a signal representative of the video signal envelope to an A/D converter **50**, which generates a digital representation of the video envelope. The digitized video envelope signal is applied to both a video signature extraction circuit **52** and events detector **48**, which causes the signature of the digitized video signal to be extracted by video signature extraction circuitry **52** responsive to the detection of predetermined events that occur in the digitized video signal. The signatures from audio signature extraction circuit **44** and video signature extraction circuit **52** are stored in a data storage device **54** together with the corresponding extraction time and date. Extraction times are provided by a clock **56** that provides a digital representation of time to data storage device **54** by way of a combining circuit **58**. Clock **56** also provides the digital representation of time to a video date-time code generator **60** that creates a digital representation of time for storage on medium **34** by recorder **32**.

Station monitor unit **20** extracts and stores signatures and times of extraction thereof. At some convenient time (not in real-time), the stored signatures are applied to the signature and recognition post-processing unit **64**, which compares the extracted signatures from the various station monitoring units **20** with a plurality of reference signatures taken from programs to identify particular corresponding broadcast programs. Several station monitoring units **20** may be interrogated at periodic intervals by the data communications circuit **66**, which accepts the stored signatures from station monitoring units **20** by way of several communication lines **68**.

The extracted signatures are compared by a signature recognition computer **70** to a library of reference signatures stored in a reference signature database memory **72**. Signature recognition computer **70** collects and classifies signatures received from several station monitoring units **20** and also generates the reference signatures stored in reference database memory **72**. Computer **70** compares the extracted signatures to the reference signatures from database memory **72** and classifies and stores them in a recognition file **74**, which is coupled to a post-processing computer **76**. Signature recognition computer **70** searches for instances of successive recognition of extracted signatures to identify a particular program. These successive recognized extracted signatures are provided to post-processing computer **76**, which produces a file or log **80** containing records of the identified programs, commercial advertisements or other repetitively broadcast programs from each monitored broadcast station together with a starting time and the program duration. Post-processing computer **76** also provides extensive analytical services to logically check and flag incomplete or otherwise defective broadcast identifications and thereby enable user detection of false signal recognitions. Post-processing computer **76** also assigns a temporary code to identify each non-recognized or unmatched extracted signature to permit later manual review of the program recorded in medium **34** for manual identification. A data entry terminal **78** is provided for updating reference signature database **72**.

The broadcast program identification system shown in FIG. **1** does not require real-time identification and processing because of the off-line use of signature data store **54**. The system also relies on manual review of possible false detections and unmatched signatures, which is necessary because of the relatively low performance effectiveness of the automated elements.

The Invention

FIG. **2** shows a functional block diagram of an illustrative embodiment of the adaptive broadcast program identification and reporting system **82** of our invention. System **82** accepts either analog or digital input signals representing audible performances of live and recorded musical works and the like. Analog input signal **84** may include real-time broadcasts of musical work performances in the AM/FM/SW frequency bands, for instance. A single broadcast frequency (e.g., FM 106.5 MHz or AM 600 kHz) constitutes a single channel of input signals for identification system **82**. Digital input signals **86** may include musical work performances embodied as digital bus signals from radio stations, compact disk (CD) player outputs, multimedia system outputs, digital audio tape (DAT) recorder outputs, digital audio track signals from cinema media, cable system video/audio signals and other similar digital audio signals.

Analog input signal **84** is filtered through the anti-aliasing filter **88** and presented to the analog-to-digital (A/D) converter **90**. Digital inputs **86** are connected directly to the digital side of A/D converter **90**.

Anti-aliasing filter **88** is required for reasons well-known in the signal processing arts. Analog signal **84** must be filtered at a frequency below the Nyquist rate, which is defined as 0.50 times the sampling frequency. For example, the Nyquist frequency corresponding to a 6 kHz sampling frequency is 3 kHz and, to avoid the undesirable introduction of spectral "aliases" into the digital output from A/D converter **90**, anti-aliasing filter **88** must restrict the analog passband to 2800 Hz or so.

A/D converter **90** provides a series of digital words (e.g., 16 bits) each representing the magnitude of analog input signal **84** at a sample time. Because signal **84** is sampled at, for instance, 6,000 Hz for an audible performance of a musical work, A/D converter must produce 6,000 digital sample signals per second, each of which includes 16 bits.

These digital sample signals are produced by A/D converter **90** on signal bus **92** and are processed through a pre-processor **94**. Signals **92** are first "windowed" in pre-processor **94** to shape the spectral envelope by removing undesired sidelobes. After windowing, the digital sample signals are overlapped and averaged to ensure relatively smooth variation over time. This smoothing procedure is also accomplished in pre-processor **94**. Both windowing and smoothing procedures are well-known in the signal processing arts.

The digitized, windowed and smoothed sample signals are next presented to a standard Fast-Fourier-Transform (FFT) circuit **96**. FFT circuit **96** creates a series of complex digital signals each representing the spectral power existent within one frequency bin of the smoothed, windowed digital sample signal time series in a manner well-known in the art. For audible performances of musical works, the output of FFT circuit **96** is primarily of interest over a 3 kHz frequency region.

The complex digital spectral signals from FFT circuit **96** are first presented to a Boxcar filter **98**, which initializes the subsequent portions of the digital system by creating a time delay. The output value during such time delay is the average of the first 40 data samples at system startup before processing begins. After processing begins, Boxcar filter **98** is replaced with an exponential smoothing filter **100** to smooth the digital FFT signals into the normalizer **102**.

Normalizer **102** accepts the digital FFT power signals from exponential smoothing filter **100** and processes them to remove steady-state frequency components. Normalizer **102** accomplishes this by first creating a new digital signal representing the logarithm (base **2**) of the initial FFT spectral power signal for each frequency bin in operating frequency range of interest. Normalizer **102** then creates a signal for each frequency bin representing the ratio of the latest FFT spectral power level for the bin divided by the exponentially smoothed or average spectral power level for the bin. Thus, the digital spectral signals **104** produced by normalizer **102** represent the original FFT spectra normalized to their moving averages, which is a known useful method for removing steady-state elements from a signal.

This operation of normalizer **102** emphasizes the transient elements of the spectral signature of the audible musical work performance, which is an important element of the method of our invention. This element arises from our unexpectedly advantageous discovery that the transient spectral elements of musical work performances can be organized to form a signature that is generally recognizable throughout the entire performance of the musical work. This is not generally true for the transient temporal elements generally exploited by prior art systems such as that discussed above in connection with FIG. **1**.

Normalized FFT spectra **104** created by normalizer **102** are divided into two chains. One such chain is sent to a clipper **106** for further processing, including summation over time and frequency bins. The second such chain is sent to a display **108** for producing a pixel array wherein pixel brightness is proportional to the magnitudes of normalized FFT spectra **104**.

Clipper **106** includes a filter that clips and scales each of the normalized FFT spectra **104** to eliminate anomalous values outside of a range of interest. Signal amplitudes are limited by clipping to a maximum value of

$$\frac{\log_2 P}{\log_2 \hat{P}} < 10.$$

The clipped normalized FFT spectra **110** from clipper **106** are next organized over frequency and time bins to create an array of R elements herein denominated "retinal" signals $[S_r]$ making up a retina **112**.

The operation of retina **112** is yet another important element of the method of our invention, which arises from our unexpectedly advantageous discovery that the spectral signature of audible musical work performances can be organized in a two-dimensional array representing predetermined combinations of frequency bins and time bins to create a recognizable pattern useful as a "signature" for identifying the musical work. Our retina concept can be best understood by considering each set of "retinal signals" or each "retina" as a two-dimensional pattern of pixels that is visually recognizable by a human operator as having distinctive patterns and features representing a particular musical work performance. Of course, a human operator can readily recognize the audible performance itself because of the normal human aural pattern-recognition capabilities for music and sound. The purpose of our retina **112** is to organize the transient elements of the spectral signature of a musical work performance into a matrix array suitable for automated recognition by a "trained" neural network. This process is discussed in more detail below in connection with FIGS. **3–6**.

Retina **112** organizes the clipped normalized FFT spectra signals **110** by averaging each over a selectable number of frequency bins and a selectable number of time sample bins to create a two-dimensional array of R retinal signals (S_r), where $1 \leqq r \leqq R$. In the exemplary embodiment discussed below, the retinal size is limited to R=2000 because of hardware storage limitations. We found that R=1920<2000 is sufficient for excellent identification performance. The R=1920 retinal signals can be, for instance, distributed over 64 columns in frequency and 30 rows in time, where each retinal signal S_r represents an average over five adjacent frequency bins (columns) and two successive overlapped time samples (rows). Such an exemplary distribution represents approximately 5.12 seconds in total analog input signal time for a single retina. After an update interval t_U=0.17 seconds, the retina content changes by losing the one oldest row and gaining one new row. Thus, as used herein, a retina represents a two-dimensional embodiment of a musical work performance signature, spanning a retinal time interval t_R (5.12 seconds, for example) of the performance, that is updated regularly (e.g., every t_U=0.17 seconds) as the performance continues.

The retinal signals **114** created by retina **112** are sent to two destinations. Retinal signals **114** are provided to a display **116** for visual inspection by a human operator. Retinal signals **114** are also presented to the neural network **118**.

Neural network **118** is preferably a standard, fully connected, feed-forward multilayer perceptron consisting of an input layer, two hidden layers and an output layer, the operation of which can be better understood with reference to the discussion below in connection with FIG. **5**. For example, neural network **118** would include 1920 inputs for an exemplary 64×30 retina. The first hidden layer may include twenty neurons, the second hidden layer may include fifteen neurons and the output layer may include twelve neurons. With this example, neural network **118** provides twelve neural output signals **120**, one from each of the twelve output layer neurons. Thus, as practitioners in the neural network arts readily appreciate, this exemplary embodiment of neural network **118** provides one set of values for S=12 neural output signals **120** responsive to each set of R=1920 retinal signals **114**. When the R retinal signals **114** are updated in response to passage of an update time interval t_U, each of the S neural output signals **120** is similarly updated. The operation of neural network **118** is governed by the values of S sets of N weights $\{(w_n)_s\}$, where $1 \leqq n \leqq N$ and $1 \leqq s \leqq S$. The number of weights is N*S and is a function of the number of linkages between neurons. N*S=38,880 in the above exemplary embodiment of neural network **118** having 47 neurons in three layers with R=1920

inputs and S=12 outputs. An additional 47 neuron bias thresholds (θ_s) also affect the operation of neural network **118**.

Neural output signals (N_s) **120** are each normalized to a predetermined threshold $T_s$in the thresholding circuit **122**. The ratio of each neural output signal **120** to the corresponding predetermined threshold (N_s/T_s) is presented to a decision logic **124**, which selects either none or only one of the S=12 neural output signals (N_s) **120** as a decision output signal N_I/T_I, shown as decision signal **126** in FIG. **2**, where I is the selected index so that $1 \leqq I \leqq S$.

The predetermined threshold signals (T_s) used by thresholding circuit **122** are manually defined during the training of neural network **118**. We select these threshold signals to optimize the error rates associated with "false identification" and "missed detection" as discussed in detail below in connection with FIGS. **11A–11D**. The events surrounding the selection of decision signal **126** are captured and recorded in a data file for analysis and reporting purposes and decision signal **126** is presented to the post-processor **128**.

Post-processor **128** examines the file of events surrounding the presentation of decision signal **126** to identify the precise date-time tag and musical work performance identification index I. These data are assembled to form a single output record and are presented as output string **130** for report logging and display. All raw data surrounding the presentation of decision signal **126** can be recorded and stored for archiving purposes.

Output string **130** is a listing of the identification of the event, identification of the source of the original audible signal, a date-time corresponding to the time of signal reception from the source and all related catalog information available in the identification library (not shown).

FIG. **3** shows an exemplary embodiment of the system of this invention implemented within a Macintosh computer **132**. FIG. **4A** shows a waveform representing an exemplary embodiment of analog input signal **84**. Within computer **132**, a signal processor **134**, embodied as two Spectral Innovation circuit boards (see FIG. **7**), provides the analog-to-digital converter **90**, and subsequent FFT, smoothing and retina functions discussed above as well as the display **108** function.

FIG. **4B** illustrates the time-varying values of several exemplary normalized FFT spectra **104** (FIG. **2**). FIG. **4C** illustrates the two-dimensional organization of retinal signals (S_r) **114** (FIG. **1**) that are presented to neural network **118**. In FIG. **3**, neural network **118** is embodied as a Quad-Transputor Board, which receives the plurality N*S+S of weight and bias signals from a separate disk file (not shown). Finally, the thresholding, decision logic and post-processing functions are embodied in software **136**, which creates output string **130** for external storage in a disk file (not shown). FIG. **3** also shows a display handler **138** for creating displays of intermediate and final output signals from Quad-Transputor Board **118** and software module **136**. FIG. **4D** illustrates one such display, showing a spectral waterfall display of neural output signals (N_s) **120** each normalized to a corresponding predetermined threshold signal T_s.

FIG. **7** provides another functional block diagram showing our system as it can be embodied on Macintosh IIcx personal computer **132**. The digital signal processing functions **134** (FIG. **3**) include a Spectral Innovations DSP **32** Signal Processing Board **140** and a Spectral Innovations A/D Sampling and Conversion Board **142**. Analog input signal **84** is presented to SI Board **142**, which creates digital sample signals **92**. Signals **92** are presented to SI DSP **32** Board **140**, which creates clipped normalized FFT spectra **110**. Spectra **110** are forwarded to a NuBus **144**, which operates at the high speed required (10 MB/sec) to handle the volume of digital data presented by Board **140**. Neural network **118** is embodied as a Quad-Transputor Board, which accepts retinal signals from bus **144** and creates neural output signals **120**, forwarding them to computer **132** on bus **144**.

The hardware configuration for neural network **118** and related elements may be implemented with any useful product available commercially, such as SI DSP **32** Board **140** in conjunction with the Transputor chips on a Levco circuit board **118**, or an i860 array processor chip set running in a VME-based system configured as a massively parallel processor.

In FIG. **7**, the input to neural network **118** is a series of retinas expressed as time slices of data separated by an update time interval t_U. Each transputor or i860 contains four parallel processors (not shown). The first of these processors operates as the manager and allocates data to the remaining three "slave" processors as well as carrying its share of the retina processing load. Four retina time slices are presented to the Quad-Transputor Board simultaneously. Each of the four transputors is responsible for processing each layer moved in time by one update time increment t_U. Thus, each of the four processors provides a parallel output through the decision selection logic **124**.

A disk file **146** suitable for mass data storage is coupled to computer **132**, providing for the storage of the decision output log and identification results. A time reference **148** is coupled to computer **132**, providing the date and time information necessary for useful identification log entries. Time reference **148** may be either internal to computer **132** or external. A keyboard **150**, or other useful means for the input of user-selected parameters, is coupled to computer **132** to provide user control of the automated processes of our invention.

The prototype system illustrated in FIG. **7** is trained using a single five-second sample from each prerecorded musical work spanning a performance time of four to eight minutes and still manages to correctly identify the musical work in real-time with over 90% reliability, as discussed in detail below in connection with FIGS. **11A–11D**. Thus, our invention also rests on the unexpectedly advantageous discovery that a single retinal sample of a musical work contains sufficient information to allow automated recognition of other performances of that same musical work, provided that the sample is organized in accordance with the retinal architecture of our invention. This advantageous discovery is exceptionally useful because it avoids the requirement for training our system over the entire musical work, such as is implied by the prior art systems exemplified by the system described above in connection with FIG. **1**. Moreover, repeated detections can be obtained throughout the musical work by a neural network trained on the retinal pattern extracted from the single five second sample.

We tested the system illustrated in FIG. **7** on a sample of 10 musical works, training the neural network with a single retina extracted from each of the 10 works. Although the neural network was trained with imposed noise to enlarge the apparent dimension and thus fuzzify the resulting pattern recognition model of the training samples into 38,927 adapted weights and bias offsets using a back propagation technique described in more detail below in connection with FIGS. **5** and **6**. This training permits real-time unattended detection and logging of musical work performances and requires substantially less processing power than any

scheme known in the art that requires the reduction of an entire work into a "signature".

The neural network recognition of "retinas" is an important element of our invention and is now described in detail in connection with FIG. **5**. Our retina concept arose from several unexpectedly advantageous observations and discoveries regarding musical work performances. The human voice contains low fundamentals in the 120 Hz frequency region and overtones (for female voices) up to 2000 Hz. Many musical instruments provide significant acoustical power over the entire frequency range between 50 Hz and 3000 Hz. Some instruments produce even higher frequency overtones.

We first limited the Fast-Fourier-Transformer (FFT) size to integral powers of two, thereby restricting the horizontal retinal dimension to powers of two (2, 4, 8, 16, etc.). We did not restrict the number of time samples and thus our vertical retina dimension is limited only to some integer number. The total size R of the input retina is limited to R=2000 elements in our exemplary embodiment by the on-board storage capacity of SI DSP board **140** (FIG. **7**). The closest reasonable number of distinct frequency bins required to cover the frequency region between 100 Hz and 2000 Hz is first assumed to be between 16 and 128 because these upper and lower limitations, applied to the S=2000 limitation, provides vertical row limits of 125 and 15.62, respectively. Because the number of retinal rows is limited to an integer, selection of the lower limit forces rounding down the row value to 15.

Having selected an operating frequency range of about 2000 Hz for monitoring all types of musical work performances, our exemplary hardware requirements impose a minimum sampling frequency of about 6000 Hz to provide the Nyquist frequency of about 3000 Hz imposed by the 2000 Hz operating frequency range. Thus, having established the sampling rate at 6000 Hz, our system time resolution is then determined by our choice of FFT length and "blocking" factor, which represents the number of FFT samples that are accumulated to form a single retina row. The resulting frequency bin width is also established by our choice of FFT length together with an arbitrary choice of an integral number of adjacent frequency bins to form a column element within each blocked row.

We investigated using FFT sizes of 512, 1024 and 2048 bins, using a 50% overlap. The resulting time resolutions are 0.085 seconds, 0.17 second and 0.34 seconds, respectively, and the 50% overlap windowing halves these resolutions. For example, if we use a 1024 point FFT with a 50% overlap, then two adjacent time samples are summed to maintain the requisite 0.17 second temporal resolution. In the above example, the frequency resolutions are 11.7 Hz/bin, 5.85 Hz/bin and 2.92 Hz/bin, respectively. With the 1024 point FFT and our 6000 Hz sampling rate, we then average the power spectral values over five adjacent frequency bins to provide a 29.25 Hz frequency resolution in retina **112**. We discovered that this approximately 30 Hz frequency resolution is sufficient for adequately discriminating most human voice and musical instrument sound patterns within the constraints imposed by our prototype system shown in FIG. **7**.

Because the total retina is limited to 2000 elements, a 1024 point FFT with 50% overlap and a 6000 Hz sampling frequency provides a R=1920 bin retina of 30 rows in time and 64 columns in frequency, assuming that two successive overlapped time samples are averaged to form each row and five adjacent frequency bins are averaged to form each column. This 30×64 retina topography (FIG. **5**) represents a 5.12 second segment of analog input signal **84**. Retina **112** is then updated in a First-In-First-Out (FIFO) manner by dropping the oldest row and adding the newest row responsive to an elapse of t_U=0.17 seconds.

We also advantageously discovered that retina **112** need not include columns representing the lowest audio frequencies because the human voice and most musical instruments do not provide significant spectral energy in frequencies below about 120 Hz. Thus, we incorporated an offset in retina **112** so that the first 20 bins (from 0 Hz through about 117 Hz) of the 1024 point FFT are abandoned. With this 20 bin (117 Hz) offset, the 30 rows in retina **112** each span 64 columns of 29.25 Hz each (5×5.85 Hz/bin) for a total retina bandwidth of 1872 Hz over an operating frequency range of 117 Hz to 1989 Hz, roughly approximating 120 Hz through 2000 Hz. We found that this operating frequency region is sufficient for highly efficient musical work identification and discrimination, given the other important features of our invention.

Referring to FIG. **5**, neural network **118** is shown having a first hidden neuron layer **152** coupled to a second hidden neuron layer **154** that in turn is coupled to an output neuron layer **156**. First hidden layer **152** includes twenty neurons exemplified by the neuron **158**. Similarly, second hidden layer **154** contains fifteen neurons exemplified by the neuron **160** and output neuron layer **156** includes twelve neurons exemplified by neuron **162**. FIG. **6** illustrates the operation of each of the **47** neurons shown in the three layers **152–156** in FIG. **5**. FIG. **6** shows the jth neuron **164**, which accepts weighted inputs from every neuron of the preceding layer of neural network **118**. That is, j^{th} neuron **164** is associated with a weight vector $(w_i)_j$ and a bias threshold θ_j. The number of weights in weight vector $(w_i)_j$ depends on the number of elements in the preceding layer of neural network **118**. For instance, in FIG. **5**, neuron **158** is associated with a weight vector having 30×64=1920 elements, each being one of the 1920 signals in retina **112**. Because each neuron in first hidden layer **152** is associated with a different weight vector $(w_i)_j$ and bias threshold θ_j, neural network **118** maintains a total of 38,420 independent adaptive factors for the twenty neurons in first hidden layer **152**.

Similarly, neuron **160** in second hidden layer **154** is associated with a weight vector $[w_i]_j$ having twenty elements, one each for the twenty neurons in the preceding first hidden layer **152**. Thus, neural network **118** maintains 315 independent adaptive factors (including bias thresholds) for the fifteen neurons in second hidden layer **154**. Finally, with similar reasoning, **192** independent adaptive factors are associated with the twelve neurons in output neuron layer **156**. The total number of adaptable factors included in neural network **118** of FIG. **5** is 38,927.

FIG. **6** shows that the actual operation of jth neuron 164 proceeds according to the well-known neuron logic principles known in the art. That is, a biased weighted sum of an input vector is nonlinearly normalized to a range (0,1) and provided as the single output y_j. The usefulness of neural network **118** is found in our training procedure for establishing the values of the 38,927 adaptable weights and biases. The training procedure for neuron **164** (FIG. **6**) is summarized in formal notation in Table 1 below.

TABLE 1

NEURON TRAINING PROCEDURE

For Output Neurons:	For Hidden Layer Neurons:
$w_{ij}(t+1) = w_{ij}(t) + \eta\delta_j x_j$	$w_{ij}(t+1) = w_{ij}(t) + \eta\delta_j x_j$

TABLE 1-continued

NEURON TRAINING PROCEDURE	
where $\delta_j = y_j(1-y_j)(d_j - y_j)$	where $\delta_j = y_j(1-y_j)\left(\sum_{i=1}^{m} \delta_i w_{ij}\right)$
and d_j = the desired output	and δ_i = previous errors

Table 1 represents standard neural network training procedures known in the art. We select a single retinal sample of a musical work performance for training neural network **118**. This selected retinal sample is provided to neural network **118** as input vector X in FIG. **6** and the 38,927 weights and biases are adjusted iteratively to reduce the error δ_j in the desired output d_j to an acceptable level.

FIG. **8** shows a procedural block diagram illustrating the neural network training technique used in our invention. The selected sample **166** is presented to the signal processing portion **168** for extraction of a selected training retina **170**. Training retina **170** is examined at step **172** and edited in step **174** by the user as desired. Selected training retina **170** is then presented to the training routine **176**, which implements the procedures summarized above in Table 1 and produces a 39,880 weight set $\{(w_{ij})_j\}$ and the 47 neuron bias thresholds (θ_j) making up the 38,927 adjustable factors. These new factors are fed back to the retina extraction procedure **168** and selected training retina **170** is refreshed responsive to the new factors. The process is repeated iteratively until neural network **118** is "trained" to recognize selected training sample **166** with a predetermined level of confidence.

An important element of the system of our invention is the addition of random noise to selected training sample **166** before using it in training neural network **118**. A uniform noise factor is applied to each training retina processed during training. This addition of noise to selected training sample **166** is a technique that arose from the unexpectedly advantageous discovery that the "fuzzifying" of the resulting pattern recognition model enlarges the apparent dimension of sample **166** and contributes to neural network **118** recognition of a musical work performance throughout a second performance when trained with a single "five-second" sample extracted from a first performance.

In FIG. **8**, after initial training of a weight set over the selected sample retina **166**, the identification and logging system is tested using the entire musical work performance and the results file is saved for later analysis. Using STATVIEW or a similarly useful statistical analysis tool, the neural output signals (N_s) are examined over the course of the musical work performance and can be plotted in the manner illustrated in FIGS. **11A–11D**. In these plots, peak neural output signal activity can be observed for each musical work performance and for all other musical work performance in any particular sample.

The operation of thresholding circuit **122** and decision logic **124** (FIGS. **2–3**) are now described. Before thresholding and decision-making, neural output signals **120** are each first smoothed to reduce "false alarm" probability. We prefer the exponential smoothing technique exhibited in the procedural block diagram of FIG. **10**.

In FIG. **10**, each of the neural output signals **120** are exponentially smoothed in the step **178** according to the following formula.

$$\hat{N}_s = \alpha N_s + (1-\alpha) N_{s-1}$$

The smoothing constant **180** is denominated α and is perhaps 0.75 in value. The output N_s from exponential smoothing step **178** is delayed by update time interval t_U to form N_{s-1} in a step **182**. N_{s-1} is fed back into step **178** to contribute to generation of the subsequent smoothed neural output signal value N_s.

FIG. **9** shows a functional block diagram illustrating the fuzzy decision logic procedure incorporated in decision logic **124** (FIGS. **2–3**). Neural output signal vector (N_s) **120** is combined with a threshold vector [T_s] **184** in thresholding circuit **122** to create a plurality S of ratio signals **186** representing the ratios (N_s/T_s). Each ratio signal N_s/T_s **186** is then tested in step **188** to determine if it exceeds unity. If no ratio signal **186** exceeds unity, control is returned in flag step **190** and no decision is made. The process is then repeated for the next neural output signal set responsive to the passage of update time interval t_U.

If step **188** finds that one or more of ratio signals **186** exceed unity in value, then the vector (N_s/T_s) of ratio signals **186** is tested in step **192** to find the maximum ratio signal value, N_I/T_I. The index I of this maximum ratio signal is tested in step **194** and stored as an "Initial Maximum Ratio" **196** if it is found to be a new string. If not, ratio N_I/T_I is tested again in step **198** to see if it exceeds the previously stored maximum value for index I. If step **198** finds that the new value exceeds the previously stored maximum, then the stored maximum is updated in step **200** and the procedure awaits the next iteration. If step **198** finds that the new value for the Ith ratio has fallen below the previously stored maximum, then that previous maximum stored value is stored as an identification alarm in step **202** together with time and date information and the process stops to await the next iteration. Note that this procedure ensures that the actual alarm threshold detection step **202** is not executed until at least one neural output signal N_I rises above a corresponding predetermined threshold T_I to a maximum and thereafter begins to decline. This refinement is an important element of the method of our invention that we have found reduces "false alarm" detection rates to very low levels.

In FIG. **9**, steps **188** and **192** can be refined to incorporate our alternate concept of delaying the decision until the "specificity" rises above some predetermined threshold value. That is, step **192** can be further conditioned on finding that the peak ratio N_I/T_I differs from the next largest ratio value by a "sufficiently large" difference to permit an "unambiguous" decision.

The procedure discussed above in connection with FIG. **9** is equivalent to detecting a peak in the output of a fuzzy-OR combination of the ratio signals **186** when viewed as unnormalized fuzzy ratio signal values. For this reason, we refer to this process as as fuzzy decision logic.

We consider the neural output signals [N_s] **120** as a set of fuzzy numbers viewed over some time window. These neural output signals represent the fuzzy probability that the hypothesis recognized by the sth neuron is true. It is this unexpectedly advantageous observation that led us to incorporate fuzzy decision methods in refining the selection of decision signal N_I/T_I **126** in FIG. **2**.

Threshold vector (T_s) **184** (FIG. **9**) is a series of threshold values in the interval (0, 1) that are manually selected upon review of the neural output history recorded during a trial run of a musical work performance. For instance, FIGS. **11A–11D** provide an exemplary chart of such a history. FIG. **11A** shows the output of the first neuron responsive to events numbered **0–9** in a ten-performance sample tape recording. The sample tape includes ten different musical work performances indexed from **0** through **9**. FIG. **11A** shows that the first neuron output signal N_o attains values above 0.85

during the performance of the first musical work for which it is trained and never thereafter exceeds 0.55 during the performances of the remaining nine musical works recorded on the sample tape.

Similarly, in FIG. **11**B, the second neural output signal N_1 is shown charted over the entire duration of the ten-performance sample tape. The value of N_1 exceeds 0.65 during the performance of the second musical work for which it is trained and otherwise never exceeds 0.15. In FIG. **11**C, the third neural output signal N_2 is shown exceeding 0.80 during the performance of the third musical work for which it is trained and otherwise never exceeding 0.15. Finally, FIG. **11**D shows the fourth neural output signal N_3, which is very active for most of the musical work performances, commonly exceeding 0.6 and twice exceeding 0.70 during musical work performances other than the fourth work for which it is trained. However, even with this unusual activity level, N_3 exceeds 0.85 during the performance of the musical work for which it is trained.

Using statistical charts of output neuron activity, exemplified by FIGS. **11**A–**11**D, the user establishes a threshold value T_s for each musical work performance for which the neural network is trained. This threshold T_s should be established below the peak values observed during the trial runs and above the peaks found over the sample of alternative musical work performances. As an example, consider FIG. **11**A. The maximum peak activity for N_o is 0.95, which is unusually high because training is halted at the 0.98 level. A secondary maximum for a different retina within the same musical work performance is found to have a value of 0.87, which is still unusually high. Over the remaining nine musical work performances for which the neuron is not trained, a maximum value of 0.50 is found. Such partial correlation is expected for musical work because of the limited range of complexity seen in contemporary popular music. Using the example of FIG. **11**A, the first threshold T_o should be established somewhere between 0.5 and 0.87 to permit reliable recognition of performances of the first musical work without undesired false recognition of performances of other musical works. We suggest establishing a threshold T_o=0.8 to provide a false-alarm margin of (0.8–0.5)=30%.

Considering the difficulties exhibited in FIG. **11**D where the range between a false alarm indication of 0.75 and the second correct identification indication as 0.87 is arguably too small to be useful, the situation suggests that training of neural network **118** should be continued with the fourth musical work training sample to further refine the neural network weight set governing recognition of performances of the fourth musical work.

Clearly, other embodiments and modifications of our invention will occur readily to those of ordinary skill in the art in view of these teachings. Therefore, our invention is to be limited only by the following claims, which include all such embodiments and modifications when viewed in conjunction with the above specification and the accompanying drawing.

We claim:

1. A computer-implemented method for identifying and reporting an audible performance of a musical work recorded in a medium of fixed expression, said method comprising the steps of:

(a) training a neural network to generate an output signal corresponding to recognition of a selected retinal sample of said audible performance;

(b) receiving an audio signal from a performance broadcast;

(c) processing said audio signal to create a series of overlapping retinal samples of said audible performance, wherein each said retinal sample includes a plurality of digital signals representing a spectral and temporal distribution of power of said audio signal;

(d) generating said neural network output signal responsive to said series of overlapping retinal samples;

(e) comparing each said neural network output signal with a corresponding predetermined threshold signal; and

(f) logging a record of the broadcast of said musical work performance responsive to said neural network output signal exceeding said corresponding predetermined threshold signal.

2. The method of claim **1** wherein said retinal samples include selected portions of said audio signal from which invariant features are removed.

3. The method of claim **1** wherein said training step (a) is performed with said selected retinal sample in combination with random noise.

4. A computer-implemented method for identifying an Ith one of a plurality S of musical works from a first audio signal A_{1s} representing a first audible performance of a musical work, wherein for each of said plurality S of musical works a set of R weights $(W_r)_s$ is predetermined responsive to a portion P_{2s} spanning a retinal time interval t_R of a second audio signal A_{2s} representing a second audible performance of said each musical work, wherein $1 \leqq s \leqq S$ and $1 \leqq r \leqq R$ are non-zero positive integers, said method comprising the steps of:

(a) creating a plurality R of retinal signals (S_r) representing a spectral and temporal distribution of power in a portion P_{1s} of said first audio signal A_{1s} spanning a retinal time interval t_R;

(b) combining said retinal signals (S_r) with each of a plurality S of weight sets $(W_r)_s$ to create a plurality S of neural output signals (N_s) each representing a weighted combination of said retinal signals (S_r) ;

(c) creating a plurality S of ratio signals (N_s/T_s) each corresponding to the ratio of each of said neural output signals (N_s) to a corresponding predetermined alarm threshold signal T_s;

(d) if at least one of said ratio signals (N_s/T_s) exceeds unity, selecting an Ith neural output signal $N_I=N_s$ corresponding to a greatest said ratio signal N_I/T_I of said plurality S of ratio signals (N_s/T_s), whereby said neural output signal N_I represents an identity of said I^{th} musical work, otherwise selecting nothing;

(e) making an alarm log record responsive to said selection of said neural output signal N_I, said alarm log record including an alarm date, an alarm time, and the identity of said I^{th} musical work; and

(f) repeating said steps (a)–(f) responsive to a passage of an updating time interval $t_U<t_R$.

5. The method of claim **4** wherein said creating a plurality of R of retinal signals (Sr) comprises the steps of:

creating a plurality of first digital signals representing amplitude samples of said first audio signal portion P_{1s};

combining said first digital signals to create a set of second digital signals representing the Fourier Transform of said first digital signals spanning a predetermined frequency region; and

accumulating one or more said set of second digital signals to form said plurality R of retinal signals (S_r).

6. The method of claim **5** wherein said each weight set $(w_r)_s$ is determined responsive to said second audio signal portion P_{2s} in combination with a random noise signal.

7. The method of claim 6 wherein each of said neural output signals (N_s) is exponentially smoothed by combining said each of said neural output signals (N_s) with a weighted combination of one or more earlier values of neural output signals (N_s) to create a smoothed neural output signal $\hat{N}_s$.

8. The method of claim 7 wherein said first audible performance of said each musical work is included in a broadcast program.

9. The method of claim 4 wherein said first and second audible performances of said each musical work are the same performance recorded in a medium of fixed expression.

10. The method of claim 9 wherein said first audible performance of said each musical work is included in a broadcast program.

11. A system for identifying and logging a broadcast of an audible performance of a musical work recorded in a medium of fixed expression, said system comprising:

input means for receiving an audio signal from a performance broadcast;

processing means coupled to said input means for creating a series of overlapping retinal samples of audio signal, wherein each said retinal sample includes a plurality of digital signals representing a spectral and temporal distribution of power of said audio signal power;

neural network means coupled to said processing means for creating a neural output signal representing a recognition of said each retinal sample;

training means coupled to said neural network means for training said neural network means to generate said neural output signal corresponding to recognition of a selected retinal sample of said audible performance; and

logging means for storing a record of a recognition of said broadcast of said musical work performance responsive to each said neural output signal in excess of a predetermined threshold signal.

12. The system of claim 11 wherein said retinal samples include selected portions of said audio signal from which invariant features are removed.

13. The system of claim 11 wherein said training means further comprises:

noise biasing means for adding random noise to said selected retinal sample of said audible performance during said training of said neural network means.

* * * * *