US006298092B1

(12) **United States Patent**
Heath, Jr. et al.

(10) **Patent No.: US 6,298,092 B1**
(45) **Date of Patent: Oct. 2, 2001**

(54) **METHODS OF CONTROLLING COMMUNICATION PARAMETERS OF WIRELESS SYSTEMS**

(75) Inventors: **Robert W. Heath, Jr.**, Hayward; **Peroor K. Sebastian**, Mountain View; **Arogyaswami J. Paulraj**, Stanford, all of CA (US)

(73) Assignee: **Iospan Wireless, Inc.**, San Jose, CA (US)

(*) Notice: Subject to any disclaimer, the term of this patent is extended or adjusted under 35 U.S.C. 154(b) by 0 days.

(21) Appl. No.: **09/585,948**

(22) Filed: **Jun. 2, 2000**

Related U.S. Application Data

(63) Continuation-in-part of application No. 09/464,372, filed on Dec. 15, 1999.

(51) **Int. Cl.**[7] **H04B 7/06**; H04B 7/08

(52) **U.S. Cl.** **375/267**; 375/299; 375/347; 455/69; 455/101; 455/102; 455/272

(58) **Field of Search** 375/216, 267, 375/299, 347; 455/69, 101, 102, 135, 136, 272

(56) **References Cited**

U.S. PATENT DOCUMENTS

5,815,488		9/1998	Williams et al. .	
5,832,044	*	11/1998	Sousa et al.	375/347
5,933,421		8/1999	Alamouti et al. .	
6,058,105		5/2000	Hochwald et al.	370/310
6,064,662		5/2000	Gitlin et al. .	
6,097,771		8/2000	Foschini	375/346
6,144,711		11/2000	Raleigh et al.	375/347
6,175,550		1/2001	Van Nee	370/206
6,198,775	*	3/2001	Khayrallah et al.	375/265

FOREIGN PATENT DOCUMENTS

0951091A2	10/1999	(EP)	H01Q/3/26
WO 98/09381	3/1998	(WO) .	
WO98/09385	3/1998	(WO)	H04B/7/02

OTHER PUBLICATIONS

Paulraj, A., *Taxonomy of space–time processing for wireless networks*, IEE Proc—Radar Sonar Navig., vol. 145, No. 1, Feb. 1998.

* cited by examiner

Primary Examiner—Amanda T. Le
(74) *Attorney, Agent, or Firm*—Lumen Intellectual Property Services

(57) **ABSTRACT**

The present invention provides a method for controlling a communication parameter in a channel through which data is transmitted between a transmit unit with M transmit antennas and a receive unit with N receive antennas by selecting from among proposed mapping schemes an applied mapping scheme according to which the data is converted into symbols and assigned to transmit signals TS_p, p=1 . . . M, which are transmitted from the M transmit antennas. The selection of the mapping scheme is based on a metric; in one embodiment the metric is a minimum Euclidean distance $d_{min,x}$ of the symbols when received, in another embodiment the metric is a probability of error P(e) in the symbol when received. The method can be employed in communication systems using multi-antenna transmit and receive units of various types including wireless systems, e.g., cellular communication systems, using multiple access techniques such as TDMA, FDMA, CDMA and OFDMA.

55 Claims, 6 Drawing Sheets

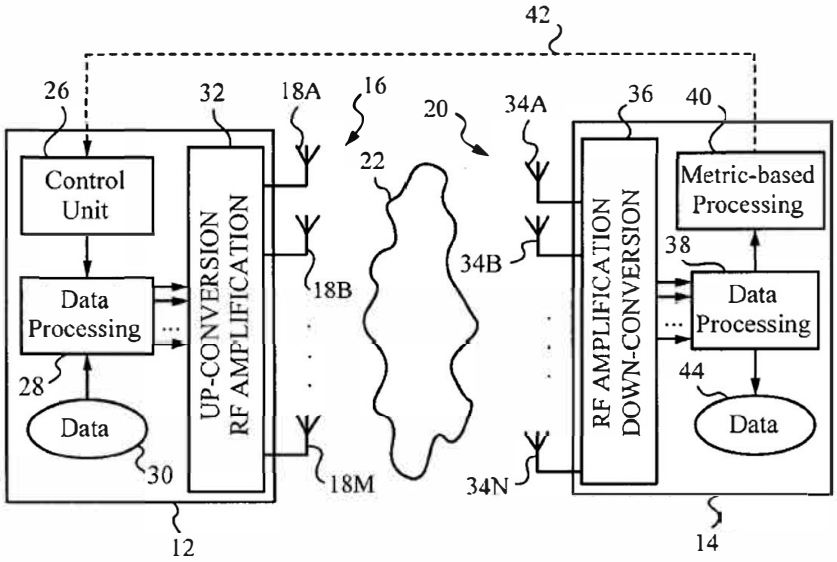

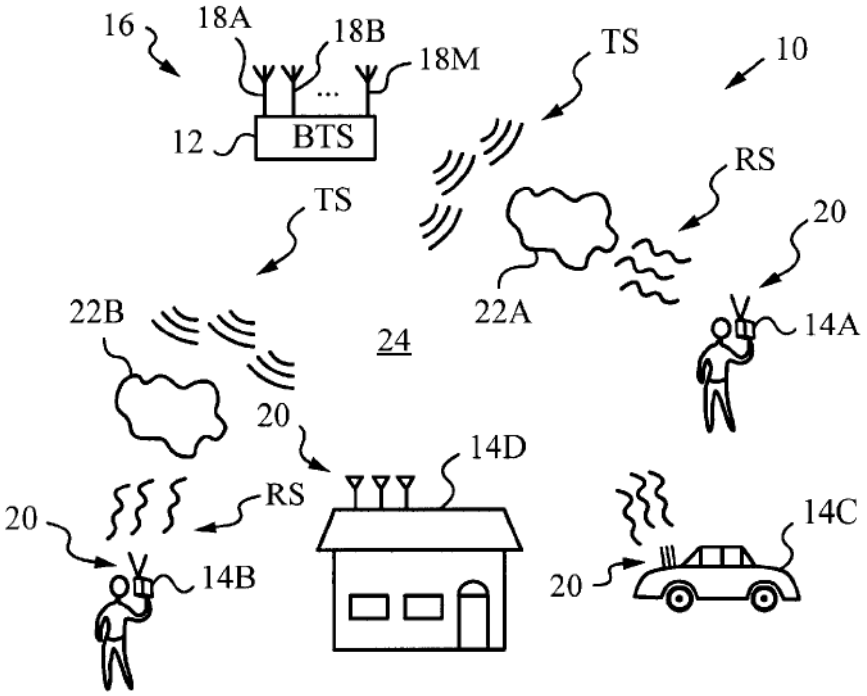
16
18A
18B
18M
TS
10
12
BTS
RS
TS
20
22B
22A
14A
24
20
14D
RS
20
14C
14B
20

FIG. 1

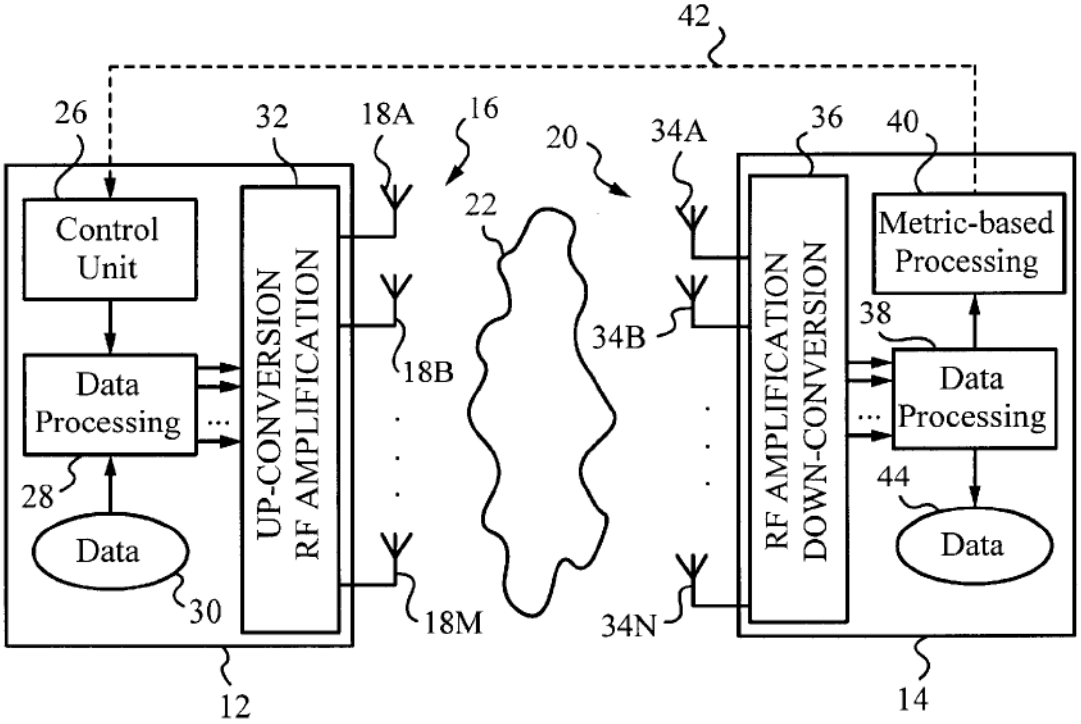
42
26
32
18A
16
20
34A
36
40
Control Unit
UP-CONVERSION RF AMPLIFICATION
22
Metric-based Processing
38
34B
18B
Data Processing
Data Processing
28
44
Data
Data
30
18M
34N
RF AMPLIFICATION DOWN-CONVERSION
12
14

FIG. 2

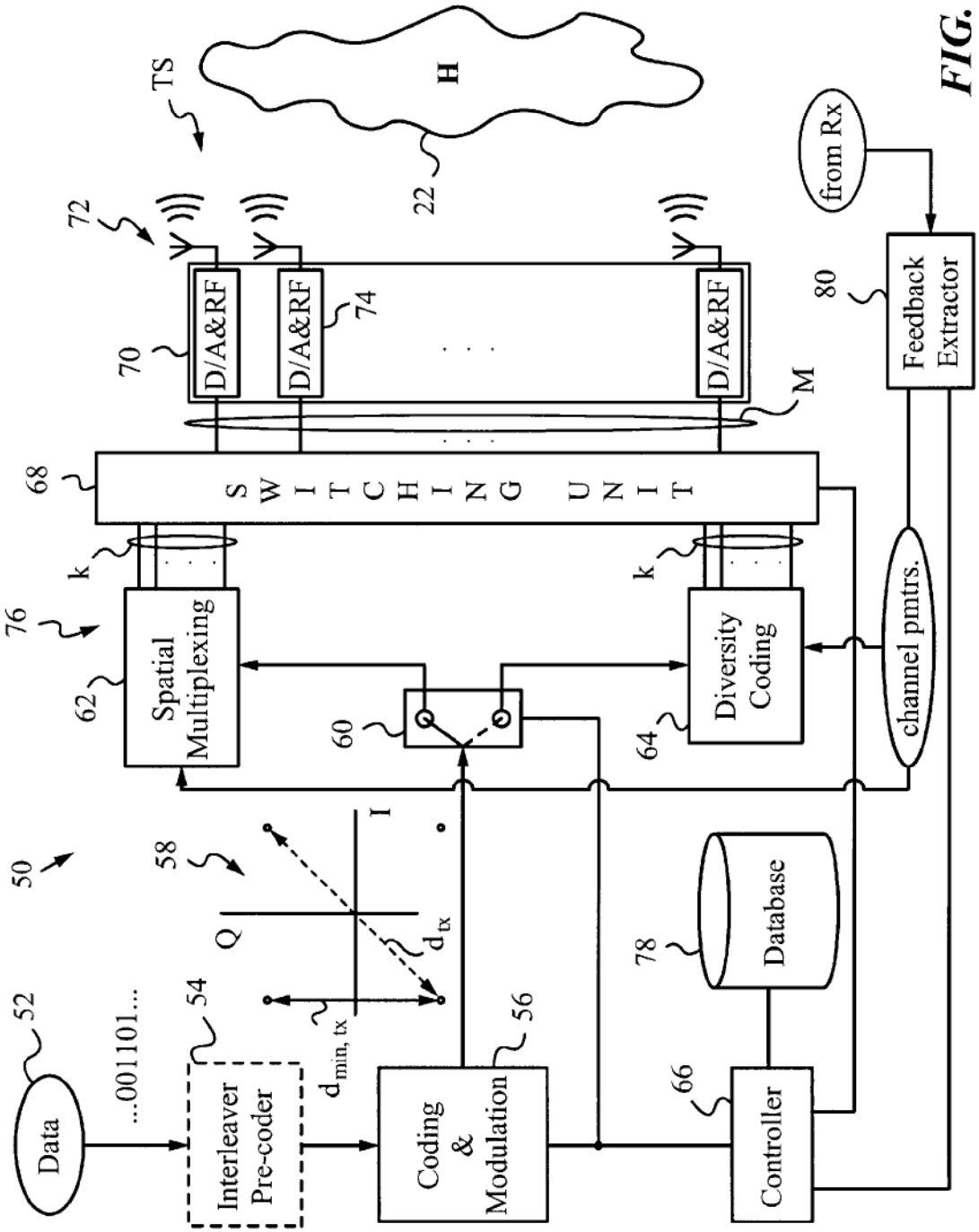
Data
52
...001101...
Interleaver Pre-coder
54
50
58
Q
I
$d_{min, tx}$
d_{tx}
Coding & Modulation
56
60
Spatial Multiplexing
62
76
k
68
S W I T C H I N G U N I T
k
Diversity Coding
64
70
D/A&RF
D/A&RF
74
D/A&RF
M
72
TS
H
22
Database
78
Controller
66
channel pmtrs.
Feedback Extractor
80
from Rx

FIG. 3

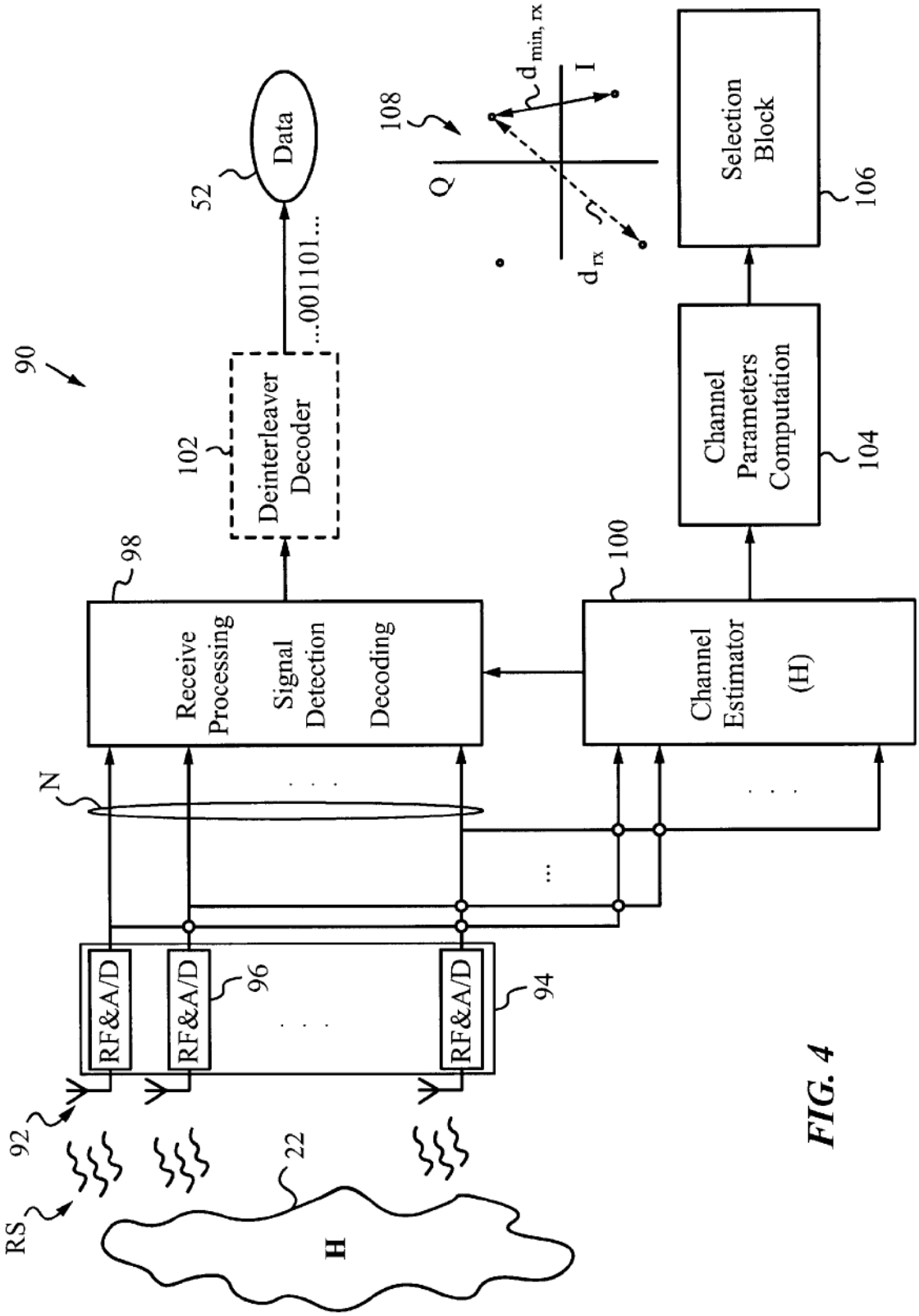
90
RS
92
22
H
RF&A/D
RF&A/D
RF&A/D
96
94
N
98
Receive Processing
Signal Detection
Decoding
102
Deinterleaver Decoder
...001101...
52
Data
100
Channel Estimator
(H)
104
Channel Parameters Computation
106
Selection Block
108
Q
I
$d_{min, rx}$
d_{rx}

FIG. 4

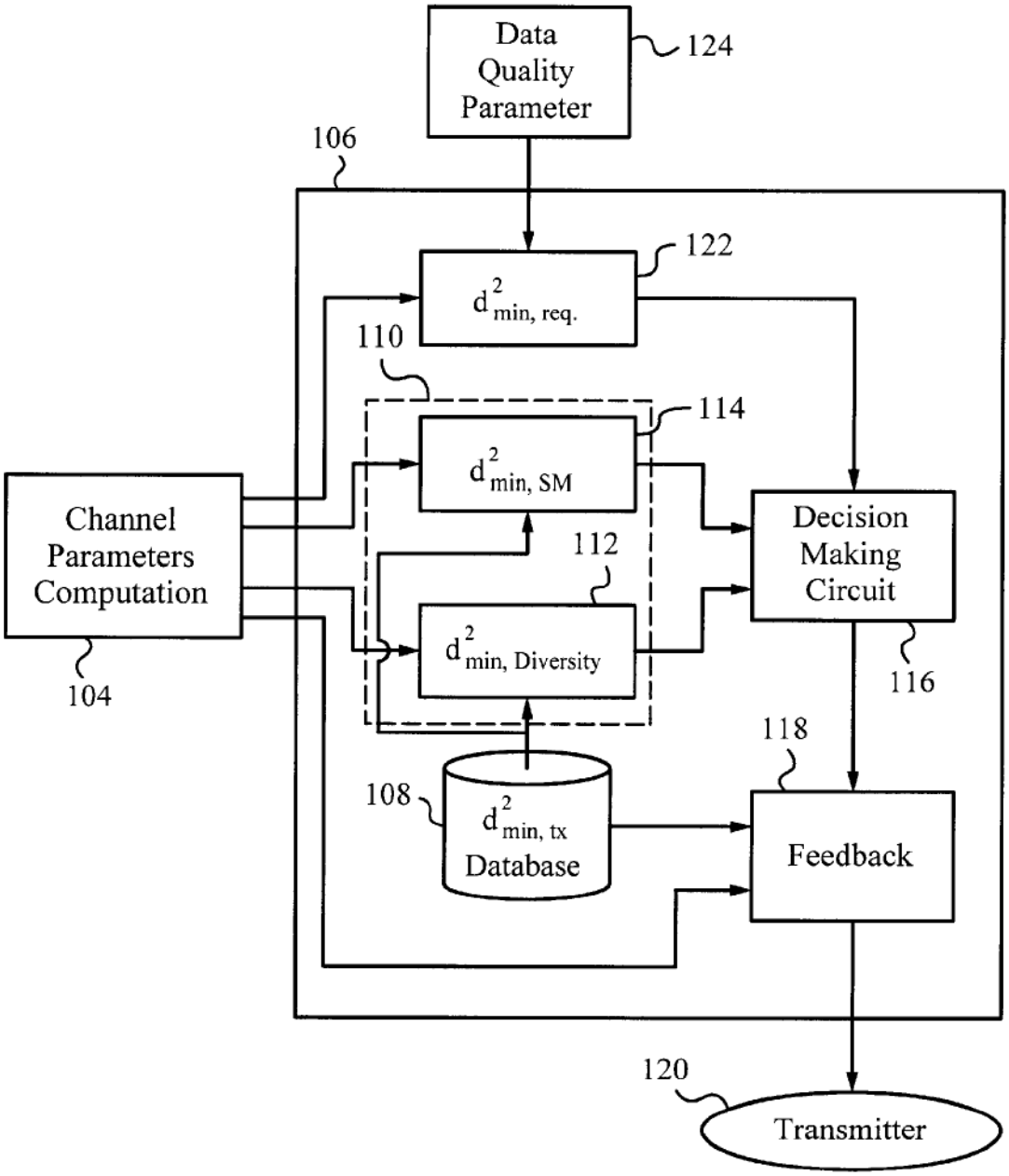
Data Quality Parameter
124
106
122
$d^2_{min, req.}$
110
114
$d^2_{min, SM}$
Channel Parameters Computation
112
Decision Making Circuit
$d^2_{min, Diversity}$
104
116
118
108
$d^2_{min, tx}$ Database
Feedback
120
Transmitter

FIG. 5A

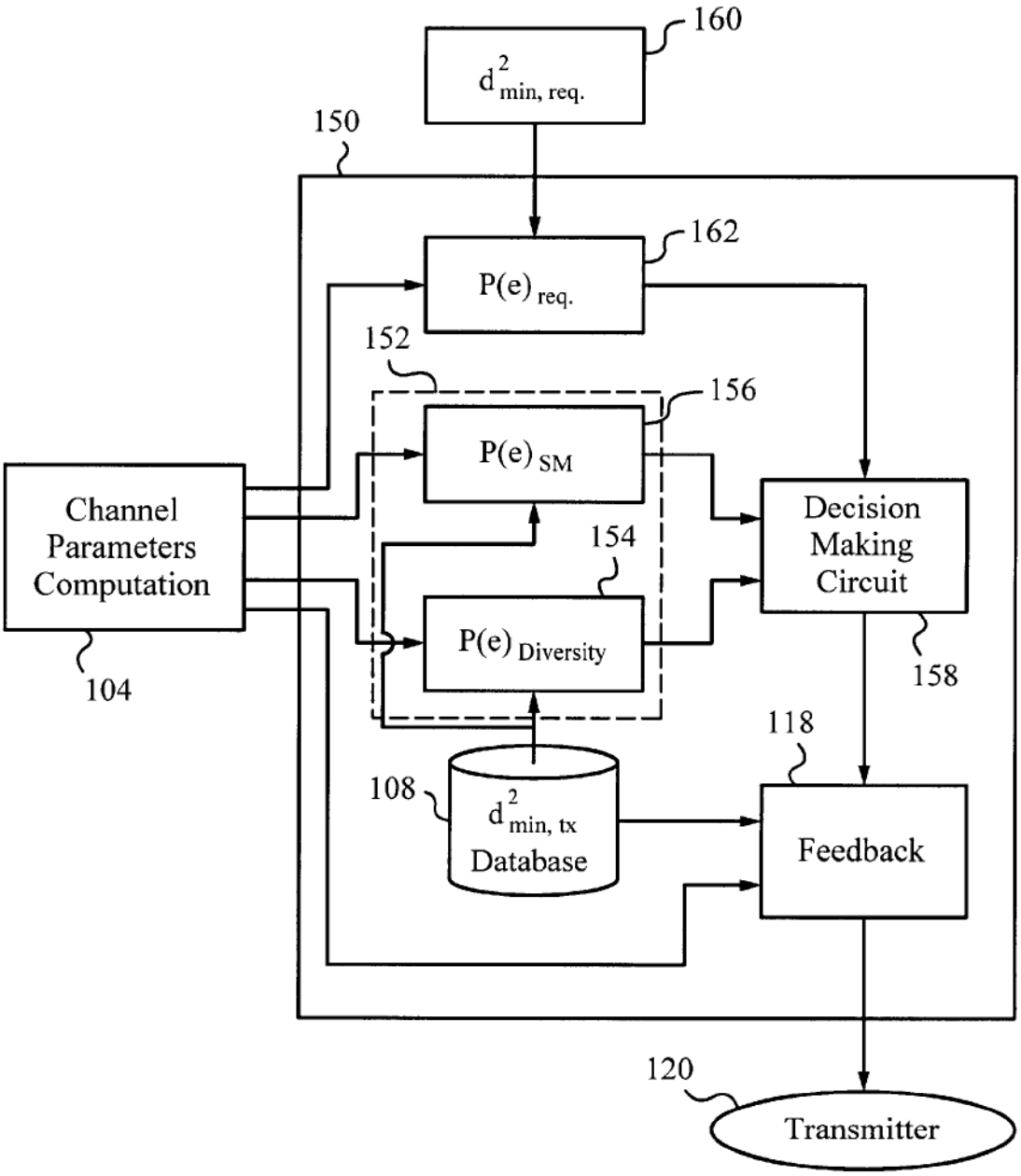
160
$d^2_{min, req.}$
150
162
$P(e)_{req.}$
152
156
$P(e)_{SM}$
Channel Parameters Computation
Decision Making Circuit
154
$P(e)_{Diversity}$
104
158
118
108
$d^2_{min, tx}$ Database
Feedback
120
Transmitter

FIG. 5B

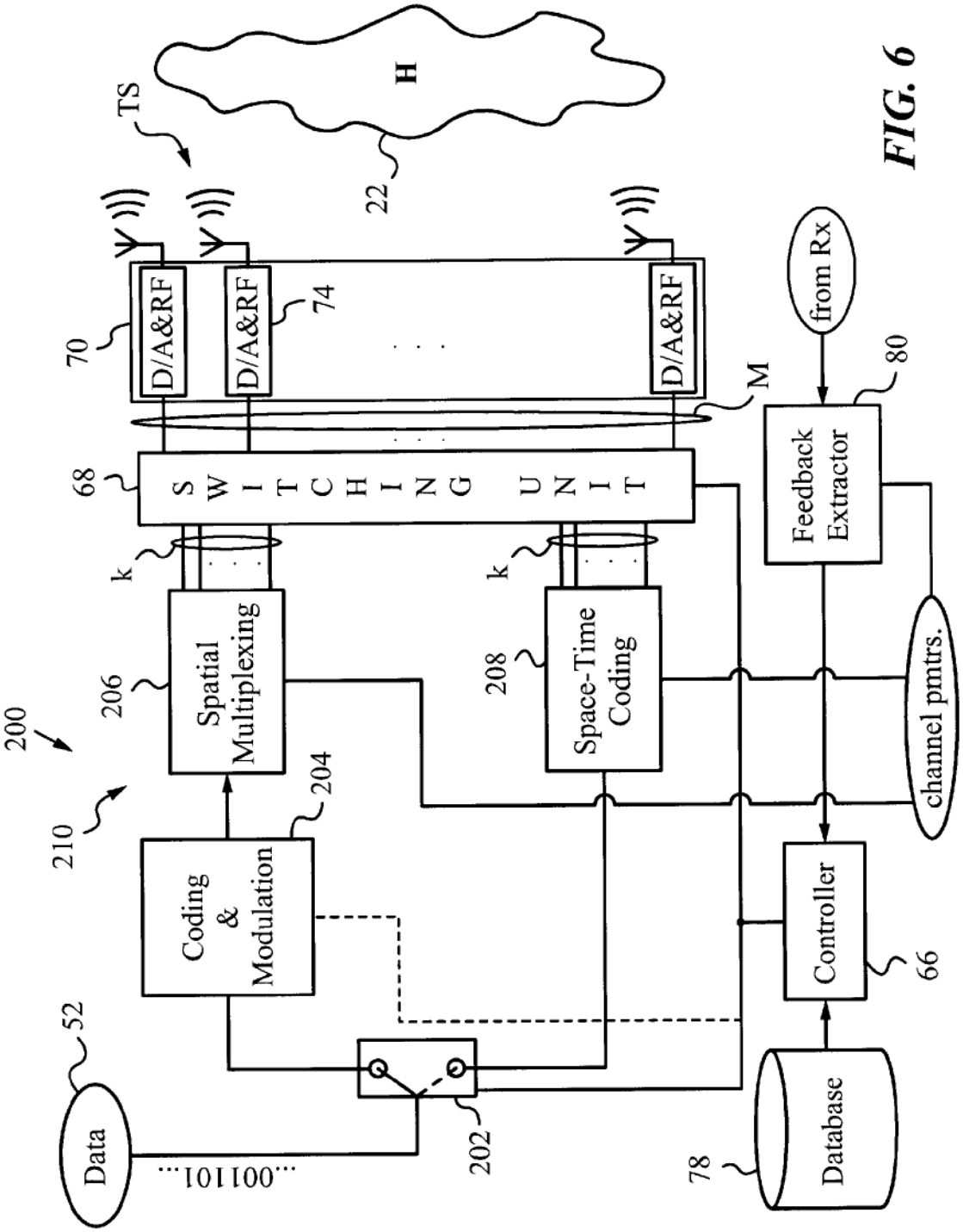
200
210
52
Data
...001101...
Coding & Modulation
204
206
Spatial Multiplexing
k
68
SWITCHING UNIT
202
208
Space-Time Coding
k
70
D/A&RF
74
D/A&RF
D/A&RF
M
TS
22
H
78
Database
66
Controller
80
Feedback Extractor
from Rx
channel pmtrs.

FIG. 6

METHODS OF CONTROLLING COMMUNICATION PARAMETERS OF WIRELESS SYSTEMS

RELATED APPLICATIONS

This patent application is a continuation-in-part of patent application Ser. No. 09/464,372 filed on Dec. 15, 1999, which is herein incorporated by reference.

FIELD OF THE INVENTION

The present invention relates generally to wireless communication systems and methods, and more particularly to controlling a communication parameter between transmit and receive units with multiple antennas.

BACKGROUND OF THE INVENTION

Wireless communication systems serving stationary and mobile wireless subscribers are rapidly gaining popularity. Numerous system layouts and communications protocols have been developed to provide coverage in such wireless communication systems.

The wireless communications channels between the transmit and receive devices are inherently variable and thus their quality fluctuates. Hence, their quality parameters also vary in time. Under good conditions wireless channels exhibit good communication parameters, e.g., large data capacity, high signal quality, high spectral efficiency and throughput. At these times significant amounts of data can be transmitted via the channel reliably. However, as the channel changes in time, the communication parameters also change. Under altered conditions former data rates, coding techniques and data formats may no longer be feasible. For example, when the channel performance is degraded the transmitted data may experience excessive corruption yielding unacceptable communication parameters. For instance, transmitted data can exhibit excessive bit-error rates or packet error rates. The degradation of the channel can be due to a multitude of factors such as general noise in the channel, multi-path fading, loss of line-of-sight path, excessive Co-Channel Interference (CCI) and other factors.

By reducing CCI the carrier-to-interference (C/I) ratio can be improved and the spectral efficiency increased. Specifically, improved C/I ratio yields higher per link bit rates, enables more aggressive frequency re-use structures and increases the coverage of the system.

It is also known in the communication art that transmit units and receive units equipped with antenna arrays, rather than single antennas, can improve receiver performance. Antenna arrays can both reduce multipath fading of the desired signal and suppress interfering signals or CCI. Such arrays can consequently increase both the range and capacity of wireless systems. This is true for wireless cellular telephone and other mobile systems as well as Fixed Wireless Access (FWA) systems.

In mobile systems, a variety of factors cause signal degradation and corruption. These include interference from other cellular users within or near a given cell. Another source of signal degradation is multipath fading, in which the received amplitude and phase of a signal varies over time. The fading rate can reach as much as 200 Hz for a mobile user traveling at 60 mph at PCS frequencies of about 1.9 GHz. In such environments, the problem is to cleanly extract the signal of the user being tracked from the collection of received noise, CCI, and desired is signal portions summed at the antennas of the array.

In FWA systems, e.g., where the receiver remains stationary, signal fading rate is less than in mobile systems. In this case, the channel coherence time or the time during which the channel estimate remains stable is longer since the receiver does not move. Still, over time, channel coherence will be lost in FWA systems as well.

Antenna arrays enable the system designer to increase the total received signal power, which makes the extraction of the desired signal easier. Signal recovery techniques using adaptive antenna arrays are described in detail, e.g., in the handbook of Theodore S. Rappaport, *Smart Antennas, Adaptive Arrays, Algorithms*, & *Wireless Position Location*; and Paulraj, A. J et al., "Space-Time Processing for Wireless Communications", IEEE Signal Processing Magazine, Nov. 1997, pp. 49–83.

Prior art wireless systems have employed adaptive modulation of the transmitted signals with the use of feedback from the receiver as well as adaptive coding and receiver feedback to adapt data transmission to changing channel conditions. However, effective maximization of channel capacity with multiple transmit and receive antennas is not possible only with adaptive modulation and/or coding.

In U.S. Pat. Nos. 5,592,490 to Barratt et al., 5,828,658 to Ottersten et al., and 5,642,353 Roy III, teach about spectrally efficient high capacity wireless communication systems using multiple antennas at the transmitter; here a Base Transceiver Station (BTS) for Space Division Multiple Access (SDMA). In these systems the users or receive units have to be sufficiently separated in space and the BTS uses its transmit antennas to form a beam directed towards each receive unit. The transmitter needs to know the channel state information such as "spatial signatures" prior to transmission in order to form the beams correctly. In this case spatial multiplexing means that data streams are transmitted simultaneously to multiple users who are sufficiently spatially separated.

The disadvantage of the beam-forming method taught by Barratt et al., Ottersten et al., and Roy III is that the users have to be spatially well separated and that their spatial signatures have to be known. Also, the channel information has to be available to the transmit unit ahead of time and the varying channel conditions are not effectively taken into account. Finally, the beams formed transmit only one stream of data to each user and thus do not take full advantage of times when a particular channel may exhibit very good communication parameters and have a higher data capacity for transmitting more data or better signal-to-noise ratio enabling transmission of data formatted with a less robust coding scheme.

U.S. Pat. No. 5,687,194 to Paneth et al. describes a Time Division Multiple Access (TDMA) communication system using multiple antennas for diversity. The proposed system exploits the concept of adaptive transmit power and modulation. The power and modulation levels are selected according to a signal quality indicator fed back to the transmitter.

Addressing the same problems as Paneth et al., U.S. Pat. No. 5,914,946 to Avidor et al. teaches a system with adaptive antenna beams. The beams are adjusted dynamically as the channel changes. Specifically, the beams are adjusted as a function of a received signal indicator in order to maximize signal quality and reduce the system interference.

The prior art also teaches using multiple antennas to improve reception by transmitting the same information, i.e., the same data stream from all antennas. Alternatively, the prior art also teaches that transmission capacity can be increased by transmitting a different data stream from each

antenna. These two approaches are commonly referred to as antenna diversity schemes and spatial multiplexing schemes.

Adaptive modulation and/or coding in multiple antenna systems involve mapping of data converted into appropriate symbols to the antennas of the transmit antenna array for transmission. Prior art systems do not teach rules suitable for determining such mappings under varying channel conditions. Specifically, the prior art fails to teach efficient methods and rules for mapping data signals to antennas in systems using multiple transmit antennas and multiple receive antennas in order to control one or more communications parameters under varying channel conditions. Development of methods and rules for selecting appropriate mapping schemes from the many possible choices would represent a significant advance in the art.

SUMMARY

The present invention provides a metric for selecting appropriate mapping schemes for transmitting data while controlling a communication parameter in a channel between a wireless transmit and receive unit, both using multiple antennas. The method of the invention teaches how to select mapping schemes based on the metric which takes into account a quality parameter of received signals or received data.

The method of the invention calls for controlling a communication parameter in a channel through which data is transmitted between a transmit unit with M transmit antennas and a receive unit with N receive antennas. The method calls for providing proposed mapping schemes according to which the data or bit stream is converted into symbols and assigned to transmit signals TS_p, p=1. . . M, which are transmitted from the M transmit antennas. A measurement of the channel at the receiver, e.g., a determination of the channel coefficients matrix H, is used to compute a minimum Euclidean distance $d_{min,rx}$ of the symbols when received in each of the proposed mapping schemes. This computation can be performed based on H and the proposed mapping schemes only. In this embodiment the minimum Euclidean distance $d_{min,rx}$ is used as a metric for selecting from the proposed mapping schemes an applied mapping scheme to be employed for transmission of the data. The selection of the mapping scheme based on the minimum Euclidean distance metric $d_{min,rx}$ allows one to control the communication parameter.

The data can be converted into symbols in accordance with any suitable modulation technique. For example, the data can be converted into symbols modulated in constellations selected from among PSK, QAM, GMSK, FSK, PAM, PPM, CAP, CPM or any other modulation scheme associating data with a constellation. The mapping scheme can involve coding the data at certain coding rates. Furthermore, the mapping scheme can include at least one method selected from among diversity coding and spatial multiplexing.

When the mapping scheme includes diversity coding a k-th order diversity coding, where k ranges from 1 to M, can be used. The diversity coding can be selected from techniques consisting of space-time block coding, transmit antenna selection, Equal Gain Combining (EGC), Maximum Ratio Combining (MRC) and delay diversity coding or any other antenna diversity scheme. Alternatively, the diversity coding can include a random assignment of the transmit signals TS_p to k of the M transmit antennas. In accordance with yet another approach, the assignment of the transmit signals TS_p to k of the M transmit antennas can be based on a required minimum Euclidean distance $d_{min,required}$. The required minimum Euclidean distance can be determined based on its relation to one or more quality parameters that the transmitted data has to maintain. For example, the quality parameter can be signal-to-interference noise ratio, signal-to-noise ratio, power level, level crossing rate, level crossing duration, bit error rate, symbol error rate, packet error rate, and error probability.

When the mapping scheme includes spatial multiplexing a k-th order spatial multiplexing (where k ranges from 1 to M) can be used. Spatial multiplexing can involve random assignment of the transmit signals TS_p to k of the M transmit antennas. Alternatively, the assignment of the transmit signals TS_p to k of the M transmit antennas can be based on the required minimum Euclidean distance $d_{min,required}$ necessary to maintain one or more of the quality parameters.

It is convenient to store a minimum Euclidean distance $d_{min,tr}$ of the symbols when transmitted in a database. The database can reside in the transmit unit or in the receive unit (or it can be available in both).

Among others, the communication parameter to be controlled can include data capacity, signal quality, spectral efficiency or throughput.

It is advantageous to establish a relation between the quality parameters and the required minimum Euclidean distances $d_{min,required}$ necessary to satisfy the quality parameters, i.e., maintain the quality parameter above a specified threshold. The relations between the minimum Euclidean distances $d_{min,required}$ for all possible mapping schemes and the corresponding quality parameters are also conveniently stored in a database.

The method of the invention can be employed in communication systems such as wireless systems, e.g., cellular communication systems, using multiple access techniques selected from among TDMA, FDMA, CDMA and OFDMA. In conjunction with these techniques the mapping schemes can include diversity coding selected from techniques including space-time block coding, transmit antenna selection, Equal Gain Combining (EGC), Maximum Ratio Combining (MRC) and delay diversity coding or any other antenna diversity scheme.

In another embodiment of the invention the metric used is the probability of error, P(e). In this case the measurement of the channel is used to compute for each of the proposed mapping schemes a probability of error P(e) in the symbol when received. The applied mapping scheme is then selected from the proposed mapping schemes based on the probability of error P(e) to control the communication parameter.

The proposed mapping schemes in this embodiment can include random or determined assignment of transmit signals TS_p to k of the M transmit antennas as discussed above both in case of diversity coding and spatial multiplexing. In particular, the assignment can be based on a required probability of error $P(e)_{req}$.

The invention further encompasses a communication system which uses the minimum Euclidean distance $d_{min,rx}$ of said symbols when received, to select the applied mapping scheme from among the proposed mapping schemes. The invention also includes a communication system which uses the probability of error to select the appropriate applied mapping scheme.

A detailed description of the invention and the preferred and alternative embodiments is presented below in reference to the attached drawing figures.

BRIEF DESCRIPTION OF THE FIGURES

FIG. 1 is a simplified diagram illustrating a communication system in which the method of the invention is applied.

FIG. **2** is a simplified block diagram illustrating the transmit and receive units according to the invention.

FIG. **3** is a block diagram of an exemplary transmit unit in accordance with the invention.

FIG. **4** is a block diagram of an exemplary receive unit in accordance with the invention.

FIG. **5**A is a detailed block diagram illustrating a selection block and related components involved in selecting an applied mapping scheme from proposed mapping schemes based on a minimum Euclidean distance metric.

FIG. **5**B is a detailed block diagram illustrating a selection block and related components involved in selecting an applied mapping scheme from proposed mapping schemes based on a probability of error metric.

FIG. **6** is a block diagram of another transmit unit in accordance with the invention.

DETAILED DESCRIPTION

The method and wireless systems of the invention will be best understood after first considering the high-level diagrams of FIGS. **1** and **2**. FIG. **1** illustrates a portion of a wireless communication system **10**, e.g., a cellular wireless system. For explanation purposes, the downlink communication will be considered where a transmit unit **12** is a Base Transceiver Station (BTS) and a receive unit **14** is a mobile or stationary wireless user device. Exemplary user devices include mobile receive units **14**A, **14**B, **14**C which are portable telephones and car phones and a stationary receive unit **14**D, which can be a wireless modem unit used at a residence or any other fixed wireless unit. Of course, the same method can be used in uplink communication from wireless units **14** to BTS **12**.

BTS **12** has an antenna array **16** consisting of a number of transmit antennas **18**A, **18**B, . . . , **18**M. Receive units **14** are equipped with antenna arrays **20** of N receive antennas (for details see FIGS. **2**, **3** and **4**). BTS **12** sends transmit signals TS to all receive units **14** via channels **22**A and **22**B. For simplicity, only channels **22**A, **22**B between BTS **12** and receive units **14**A, **14**B are indicated, although BTS **12** transmits TS signals to all units shown. In this particular case receive units **14**A, **14**B are both located within one cell **24**. However, under suitable channel conditions BTS **12** can transmit TS signals to units outside cell **24**, as is known in the art.

The time variation of channels **22**A, **22**B causes transmitted signals TS to experience fluctuating levels of attenuation, interference, multi-path fading and other deleterious effects. Therefore, communication parameters of channels **22**A, **22**B such as data capacity, signal quality, spectral efficiency or throughput undergo temporal changes. Thus, channels **22**A, **22**B can not at all times support efficient propagation of high data rate signals TS or signals which are not formatted with a robust coding algorithm.

In accordance with the invention, antenna array **16** at BTS **12** can be used for spatial multiplexing, transmit diversity or a combination of the two to reduce interference, increase array gain and achieve other advantageous effects. Antenna arrays **20** at receive units **14** can be used for spatial multiplexing, receive diversity or a combination of the two. All of these methods improve the capacity, signal quality, range and coverage of channels **22**A, **22**B. The method of the invention finds an optimum choice or combination of these techniques chosen adaptively with changing conditions of channels **22**A, **22**B. The method of the invention implements an adaptive and optimal selection of spatial multiplexing, diversity as well as rate of coding and bit-loading over transmit antenna array **16** to antenna array **20**.

Specifically, the method of the invention addresses these varying channel conditions by adaptively controlling one or more communication parameters based on a metric. FIG. **2** illustrates the fundamental blocks of transmit unit **12** and one receive unit **14** necessary to employ the method. Transmit unit **12** has a control unit **26** connected to a data processing block **28** for receiving data **30** to be converted and mapped in the form of transmit signals TS in accordance with a number of proposed mapping schemes to transmit antennas **18**A, **18**B, . . . , **18**M for transmission therefrom. An up-conversion and RF amplification block **32** supplies the transmit signals TS to antennas **18**A, **18**B, . . . , **18**M.

On the other side of the link, receiving unit **14** has N receive antennas **34**A, **34**B, . . . , **34**N in its array **20** for receiving receive signals RS. An RF amplification and down-conversion block **36** processes receive signals RS and passes them to data processing block **38**. Data processing block **38** includes a channel measurement or estimation unit (see FIG. **4**) which obtains a measurement of the channel coefficients matrix H characterizing channel **22**.

A metric-based processing unit **40** uses matrix H and knowledge of the proposed mapping schemes to select an applied mapping scheme which should be used by transmit unit **12**. In particular, given a communication parameter which is to be controlled, e.g., maximized or kept within a prescribed range, unit **40** makes a decision about which of the proposed mapping schemes should be selected as the applied mapping scheme under prevailing conditions of channel **22**. This selection is fed back as indicated by dashed line **42** to transmit unit **12**. In case channel **22** is a time-division duplexed (TDD) channel, which is reciprocal between the receive and transmit units, no separate feedback is required. In response, unit **26** employs the applied mapping scheme in processing data **30**. This ensures that a selected communication parameter or parameters are controlled.

An exemplary embodiment of a transmit unit **50** for practicing the method of the invention is shown in FIG. **3**. Data **52**, in this case in the form of a binary stream, has to be transmitted. Before transmission, data **52** may be interleaved and pre-coded by interleaver and pre-coder **54** indicated in dashed lines. The purpose of interleaving and pre-coding is to render the data more robust against errors. Both of these techniques are well-known in the art.

Data **52** is delivered to a conversion unit, more specifically a coding and modulation block **56**. Block **56** converts data **52** into symbols at a chosen modulation rate and coding rate. For example, data **52** can be converted into symbols through modulation in a constellation selected from among PSK, QAM, GMSK, FSK, PAM, PPM, CAP, CPM or other suitable constellations. In this embodiment, data **52** is modulated in accordance with 4QAM, represented by a constellation **58** with four points (the axes Q and I stand for quadrature and in-phase). In particular, data **52** is 4QAM modulated at a certain modulation rate and coding rate. The transmission rate or throughput of data **52** will vary depending on the modulation and coding rates.

Table 1, below, illustrates some typical modulation and coding rates with the corresponding constellations which can be used in the proposed mapping schemes. The entries are conveniently indexed by a mapping index.

TABLE 1

Mapping Index	Modulation Rate (bits/symbol)	Coding Rate	Throughput (bits/s/Hz)	$d_{min,tx}$	Output Constellation
1	1	1	1	4	BPSK
2	1	½TCM	1	7.2	4 PAM
3	2	1	2	2	4 QAM
4	2	⅔TCM	2	4.3	8 PSK
5	3	1	3	0.58	8 PSK
6	3	¾TCM	3	1.32	16 PSK
7	4	1	4	0.4	16 QAM
8	4	⅘TCM	4	0.8	32 QAM

In this table minimum Euclidean distances $d_{min,tx}$ are listed with symbol energies E_s normalized to equal 1. The abbreviation TCM stands for Trellis Coded Modulation, which is well-known in the art and involves the simultaneous application of coding and modulation. The mapping index column can be used to more conveniently identify the proposed constellations, modulation and coding rates which are to be used as part of the proposed mapping schemes.

Tables analogous to Table 1 for other constellations can be easily derived. Specifically, similar tables can be produced for constellations GMSK, PPM, CAP, CPM and others. It should be noted that modulation and coding are well-known in the art.

The next to last column of Table 1 indicates a minimum Euclidean distance $d_{min,tx}$ in the constellation, where the subscript tx indicates the transmit side. This is the shortest distance between any two points in the constellation. The minimum Euclidean distance between two points in 4QAM constellation **58** is indicated by a solid line. A longer distance dt, is also indicated in a dashed line. The code used increases this minimum Euclidean distance $d_{min,tx}$ as is clear from in Table 1. The minimum Euclidean distances for any other can be calculated or obtained from standard tables. For more information on the derivation of these distances see Stephen B. Wicker, *Error Control Systems for Digital Communication and Storage*, Prentice Hall, 1995, Chapter 14.

Once coded and modulated in symbols, data **52** passes to a switch **60**. Depending on its setting, switch **60** routs data **52** either to a spatial multiplexing block **62** or to a diversity coding block **64**. Both blocks **62** and **64** have a number k of outputs, where k≦, to permit order k spatial multiplexing or order k diversity coding. A switching unit **68** is connected to blocks **62** and **64** for switching the k order spatially multiplexed or k order diversity coded signals to its M outputs. The M outputs lead to the corresponding M transmit antennas **72** via an up-conversion and RF amplification stage **70** having individual digital-to-analog converters and up-conversion/RF amplification blocks **74**.

Together, switch **60**, blocks **62**, **64** and switching unit **68** act as an assigning unit **76** for assigning data **52** to transmit signals TS_p, where p=1. . . M, for transmission from the M transmit antennas **72**. It should be noted that for spatial multiplexing of order k or diversity coding of order k, where k<M, not all antennas **72** may be assigned transmit signals TS_p. The criteria for selecting which of antennas **72** will be transmitting transmit signals TS_p will be discussed below.

Thus, data **52** undergoes conversion into symbols and assignment to transmit signals TS_p which are transmitted from antennas **72**. This conversion and assignment of data **52** represent a mapping scheme. Specifically, all the possible combinations of conversions and assignments represent possible or proposed mapping schemes which can be used by transmitter **50** to transmit data **52** from its M antennas **72** over channel **22**.

Transmit unit **50** also has a controller **66** connected to coding and modulation unit **56** and to switch **60**. A database **78** of proposed mapping schemes is connected to controller **66**. Database **78** conveniently contains tables, e.g., two tables: one for diversity coding and one for spatial multiplexing, or one integrated table or look-up table for both diversity coding and spatial multiplexing. The table or tables contain modulation rates, coding rates, throughputs, and minimum Euclidean distances for mapping schemes employing diversity coding and for mapping schemes employing spatial multiplexing. The tables or table can also include a mapping index column, as does table 1, to simplify the identification of the coding and modulation rates to be used in the proposed mapping schemes. In an integrated table the mapping index can serve as a mapping scheme index to identify all mapping parameters, i.e., whether diversity coding or spatial multiplexing is employed and at what coding rate, modulation rate, throughput and associated minimum Euclidean distance. The convenience of using one mapping scheme index resides in the fact that feed back of mapping scheme index to transmit unit **50** does not require much bandwidth.

Specifically, transmit unit **50** receives feedback denoted Rx from receive unit **90** (see FIG. **4**) via a feedback extractor **80**. Feedback extractor **80** detects the mapping scheme index and forwards it to controller **66**. Controller **66** looks up the corresponding mapping scheme which is to be applied in database **78**. In cases where channel parameters, e.g., channel coefficients matrix H, have to be known to employ the applied mapping scheme (e.g., when the diversity coding technique is Maximum Ratio Combining), receive unit **90** may also send the channel parameters to feedback extractor **80**. Extractor **80** delivers the channel parameters to controller **66** as well as diversity coding block **64** and spatial multiplexing block **62**. In the event of using a time-division duplexed (TDD) channel **22**, the feedback information, i.e., the channel parameters are obtained during the reverse transmission from the receive unit or remote subscriber unit, as is known in the art, and no dedicated feedback extractor **80** is required.

FIG. **4** illustrates receive unit **90** for receiving receive signals RS from transmit unit **50** through channel **22** with N receive antennas **92**. Receive unit **90** has an RF amplification and down-conversion stage **94** having individual RF amplification/down-conversion/ and analog-to-digital converter blocks **96** associated with each of the N receive antennas **72**. The N outputs of stage **94** are connected to a block **98** which performs receive processing, signal detection and decoding functions. The N outputs of stage **94** are also connected to a channel estimator **100**. Channel estimator **100** obtains a measurement of channel **22**; in particular, it determines the channel coefficients matrix H representing the action of channel **22** on transmit signals TS_p.

Estimator **100** is connected to block **98** to provide block **98** with matrix H for recovery of data **52**. Specifically, block **98** uses matrix H to process the received signals RS prior to reversing the operations performed on data **52** at transmit unit **50**. The output of block **98** yields the reconstructed data stream. A deinterleaver and decoder unit **102** is placed in the data stream if a corresponding interleaver and coder **54** was employed in transmitter **50** to recover original data **52**.

Channel estimator **100** is also connected to a channel parameters computation block **104**. Block **104** computes the prevailing parameters of channel **22**. In particular, block **104**

can compute channel parameters such as SINR, Frobenius norms, singular values, condition of channel coefficients matrix H and other channel parameters. The actual computational circuits for computing these parameters are known to a person skilled in the art.

Block **104** is further connected to a selection block **106**. Block **106** analyzes received constellation **108** which corresponds to transmitted constellation **58** after being subjected to the action of the channel **22**, i.e., after channel coefficients matrix H is applied. Block **106** selects from the proposed mapping schemes an applied mapping scheme which is to be used in mapping data **52** to transmit antennas **72** of transmit unit **50**.

In another embodiment, minimum Euclidean distance $d_{min,rx}$ computed for symbols received is used as the metric for controlling the communication parameter. FIG. **5A** illustrates a detailed block diagram showing selection block **106** and related components involved in selecting the applied mapping scheme based on minimum Euclidean distance $d_{min,rx}$. Block **106** contains a database **108** of the minimum Euclidean distances $d^2_{min,tx}$; here these are the distance values squared, for all constellations **58** in the proposed mapping schemes on the transmit side. The distance information in database **108** is associated with the respective proposed mapping schemes and can be ordered in tables for diversity coding and spatial multiplexing with the associated constellations, modulation rates and coding rates in a similar form as in database **78** discussed above. In fact, like database **78**, database **108** may contain a copy of an integrated table or look-up table as discussed above. For mathematical reasons, it is convenient to work with the square values of the minimum Euclidean distances and the embodiments described herein shall take advantage of this fact.

Database **108** is connected to a computing block **110**. Computing block **110** computes a minimum Euclidean distance $d_{min,rx}$ for received symbols based on matrix H of channel **22**. Due to the action of channel **22** minimum Euclidean distance $d^2_{min,tx}$ for the symbols transmitted from transmit unit **50** will have changed in the received symbols. In other words, $d^2_{min,tx} \neq d^2_{min,rx}$ because of the action of channel coefficients matrix H. The actual change in the minimum Euclidean distance between the transmitted and received constellations will depend not only on the constellation, modulation rate and coding rate but also on the assignment of data **52** to transmit signals TS_p for transmission from transmit antennas **72**. In other words, the minimum distance depends on the entire proposed mapping scheme. Therefore, computing block **110** has a sub-block **112** for computing $d^2_{min,Diversity}$ for received symbols which are diversity coded and sub-block **114** for computing $d^2_{min,SM}$ for received signals which are spatially multiplexed. Both sub-blocks **112**, **114** obtain the value of $d^2_{min,tx}$ from database **108**.

The diversity coding methods can include techniques such as space-time block coding, transmit antenna selection, Equal Gain Combining, Maximum Ratio Combining and delay diversity coding. All of these coding methods are described in the prior art. Alternatively, a random assignment of transmit signals TS_p to k of transmit antennas **72** can be made. This is especially useful when transmit unit **50** is initially turned on, since no stable information about channel **22** may be available at that time. The order of the diversity coding methods is k, where $2 \leqq k \leqq M$. Let us designate the throughput at order k=M diversity coding to be r bits/s/Hz. When k<M—fewer than all M transmit antennas **72** are being used for diversity—the throughput remains at r bits/s/Hz. Sub-block **112** uses the channel coefficients matrix H and $d^2_{min,tx}$ from database **108** to compute $d^2_{min,Diversity}$ to evaluate diversity coding methods listed above. The mathematics involved in these computations will be addressed below. Sub-block **112** then selects from among the $d^2_{min,Diversity}$ values the largest one for each data rate r. This is the best selection since it ensures the lowest probability of data corruption or error.

Spatial multiplexing methods are known in the art. Spatial multiplexing in the present invention can involve a prescribed or a random assignment of transmit signals TS_p to k of transmit antennas **72**. Random transmit antenna assignment is especially useful when transmit unit **50** is initially turned on, since no stable information about channel **22** may be available at that time. The order of spatial multiplexing is k, where $2 \leqq k \leqq M$. Let us designate the throughput per antenna **72** at k-th order spatial multiplexing to be r/k bits/s/Hz. When k<M then M−k transmit antennas **72** are used for diversity.

Sub-block **114** uses the channel coefficients matrix H and $d^2_{min,tx}$ from database **108** to compute $d^2_{min,Sm}$ for the spatial multiplexing methods. The mathematics involved in these computations will be addressed below. Sub-block **114** then selects from among the $d^2_{min,SM}$ values the largest one for each data rate r. This is the best selection since it ensures the lowest probability of data corruption or error.

Computing block **110** is in communication with a decision making circuit **116**. Both sub-blocks **112**, **114** deliver their choices of the largest $d^2_{min,Diversity}$ and $d^2_{min,SM}$ for each data rate r respectively to decision making circuit **116**.

In accordance with another embodiment and as indicated in FIG. **5A**, decision making block **116** is also connected to a block **122** whose function is to determine a required minimum Euclidean distance $d^2_{min,required}$. Block **122** is in communication with communication parameters computation block **104** and with a data quality parameter block **124**.

Block **124** informs block **122** of a quality parameter, e.g., acceptable bit error rate (BER) or other threshold, which has to be observed. In fact, the quality parameter can be any of the following: signal-to-interference noise ratio, signal-to-noise ratio, power level, level crossing rate, level crossing duration, bit error rate, symbol error rate, packet error rate, and error probability. The quality parameter selected can be dictated by the type of service, e.g., fixed rate service, between transmit unit **50** and receive unit **90**, or by other requirements placed on data **52** or any other aspect of the communication link. As an example, a fixed BER is chosen as the quality parameter in this embodiment. The BER is translated into a corresponding probability of error P(e) and supplied to block **122**; here P(e) is specifically the probability of symbol error.

Block **104** provides block **122** with the channel parameters, e.g., channel coefficients matrix H. The channel parameters are included in the derivation of $d^2_{min,required}$. In the present embodiment, $d^2_{min,required}$ is derived directly from the required P(e) using an established relationship:

$$P(e) \leq N_e Q\left(\sqrt{\frac{E_s d^2_{\min,required}}{2N_o}}\right)$$

where N_e is the number of nearest neighbors in the constellation and can be found for each proposed mapping scheme based on the channel coefficients matrix H, $Q(x)=\frac{1}{2}\mathrm{erfc}(x/\sqrt{2})$, where erfc is the complementary error function, E_s is the symbol energy and N_o is the noise variance.

When other quality parameters are used, $d^2_{min,required}$ can be derived from other relationships involving different

parameters from among those delivered from block **124** and from block **104**. In any event, the relation between the quality parameter and $d^2_{min,required}$ necessary to satisfy the quality parameter should be established.

The value of $d^2_{min,required}$ is supplied to decision making circuit **116** and the choice between $d^2_{min,Diversity}$ and $d^2_{min,SM}$ is made such that the value which exceeds $d^2_{min,required}$ and which supports the maximum data rate r is selected. For example, when both values comply with data rate r and are larger than $d^2_{min,required}$ then the larger of the two is chosen. If neither $d^2_{min,Diversity}$ or $d^2_{min,SM}$ is satisfactory, then additional proposed mapping schemes are evaluated by sub-blocks **112**, **114** until either one produces a value of d^2_{min} which exceeds $d^2_{min,required}$ and then this value is chosen.

It should also be noted, that when either diversity coding or spatial multiplexing is employed in the proposed mapping schemes, the assignment of transmit signals TS_p to k of the M antennas **72** can be made based on $d^2_{min,required}$. This assignment can be made by choosing the subset k of M transmit antennas **72** which provides the maximum data rate r for the given $d^2_{min,required}$.

During operation receive unit **90** repeats the computation of d_{min} as channel **22** changes. In the case of a moving receiver **90**, e.g., a cellular telephone, this recalculation should be performed more frequently, since the channel coherence time is short. In case of a stationary receiver **90**, e.g., a wireless modem, the coherence time is longer and d_{min} can be recomputed at longer intervals.

This selection is delivered to a feedback **118**, which passes the choice on to a transmitter **120** of the receive unit **90**. Transmitter **120** sends the choice of the applied mapping scheme characterized by the largest d^2_{min} at the desired data rate r back to transmit unit **50**. Conveniently, transmitter **120** can send the mapping scheme index identifying enabling transmit unit **50** to locate and retrieve the applied mapping scheme from database **78**.

The applied mapping scheme includes the modulation rate and coding rate, as well as a choice of the diversity method or spatial multiplexing method which yielded that largest d^2_{min} value picked at decision making block **116**. Advantageously, feedback **118** is also connected to channel parameters computation block **104**, as shown, to additionally transmit back to transmit unit **50** the parameters of channel **22**, e.g., the channel coefficients matrix H, determined at receiver **90**.

FIG. **5**B illustrates an alternative embodiment of the invention in which a selection block **150** relies on the probability of error P(e) as a metric to select the applied mapping scheme from the proposed mapping schemes. Analogous blocks in this embodiment retain the reference numbers from FIG. **5**A. In particular a computing block **152** has two sub-blocks **154**, **156** for computing the probability of error for diversity coding $P(e)_{Diversity}$ and probability of error for spatial multiplexing $P(e)_{SM}$ for each data rate r.

Sub-blocks **154**, **156** are connected to a decision making circuit **158**. Of the $P(e)_{Diversity}$ and $P(e)_{SM}$ values circuit **158** chooses the one which is the lowest from the proposed mapping schemes and supports the highest data rate r. This choice is fed back via transmitter **120** to transmit unit **50** as in the above-described embodiment.

Preferably, a block **160** provides the $d^2_{min,required}$ value based on a quality parameter, e.g., a desired BER in the case of fixed BER service, to a block **162** for computing the required probability of error $P(e)_{required}$. Once again, the relationship:

$$P(e) \le N_e Q\left(\sqrt{\frac{E_s d^2_{\min,required}}{2N_o}}\right)$$

can be used in this computation. Block **162** uses $d^2_{min,required}$ as well as channel parameters from communication parameters computation block **104** to compute P(e)required. This computed value of $P(e)_{required}$ is then supplied to decision making circuit **158** to select the suitable value from among the $P(e)_{Diversity}$ and $P(e)_{SM}$ values for the proposed mapping schemes. In this case the lowest value of P(e) is selected.

It should be noted that in the event transmit unit **50** receives feedback of channel information, whether using TDD or simple feedback, it could make the selection of applied mapping scheme on its own. In other words, transmit unit **50** can select the mapping scheme index and apply the corresponding mapping scheme from database **78**. This alternative approach would be convenient when receive unit **90** does not have sufficient resources or power to evaluate the proposed mapping schemes. Of course, transmit unit **50** would then contain all the corresponding computation and decision-making blocks contained in receive unit **90** as described above.

FIG. **6** illustrates another embodiment of a transmit unit **200**. Corresponding parts have been labeled with the same reference numbers as in FIG. **3**. In this case, data **52** to be transmitted is first delivered to a switch **202**. Depending on the setting of switch **202** data **52** is passed either to a coding and modulation block **204** and spatial multiplexing block **206** or to a space-time coding block **208**. In this embodiment space-time coding block **208** assumes all the functions of coding, modulating and applying a diversity technique to data **52**. Meanwhile, blocks **204** and **206** implement coding, modulation and spatial multiplexing respectively.

Both blocks **206** and **208** have a number k of outputs, where $k \leqq M$, to permit order k spatial multiplexing or order k diversity coding respectively. Switching unit **68** is connected to blocks **206** and **208** for switching the k order spatially multiplexed or k order diversity coded signals to its M outputs. The M outputs lead to the corresponding M transmit antennas **72** via up-conversion and RF amplification stage **70** having individual digital-to-analog converters and up-conversion/RF amplification blocks **74**.

Together, switch **202**, blocks **204**, **206**, **208** and switching unit **68** act as an assigning unit **210** for assigning data **52** to transmit signals TS_p, where p=1. . . M, for transmission from the M transmit antennas **72**. As in transmit unit **50**, the criteria for selecting the applied mapping scheme will dictate the setting of switch **202** and operation of blocks **206**, **208**, **68**. In other words, the applied mapping scheme will be used to set all parameters of assigning unit **210**. As before, this function is achieved with the aid of feedback denoted Rx from receive unit **90** (see FIG. **4**) via a feedback extractor **80**. Feedback extractor **80** detects the mapping scheme index and forwards it to controller **66**. Controller **66** looks up the corresponding mapping scheme which is to be applied in database **78**. In cases where channel parameters, e.g., channel coefficients matrix H, have to be known to employ the applied mapping scheme receive unit **90** may also send the channel parameters. Extractor **80** delivers the channel parameters to controller **66** as well as spatial multiplexing block **206** and space-time coding block **208**. Once again, in the event of using a time-division duplexed (TDD) channel **22**, the feedback information, i.e., the channel parameters are obtained during the reverse transmission from the receive unit or remote subscriber unit, as is known in the art, and no dedicated feedback extractor **80** is required.

The above embodiments will provide a person of average skill in the art with the necessary information to use the two metrics, minimum Euclidean distance and probability of error for making the appropriate selection of applied mapping scheme in communications systems with various multi-antenna transmit and receive units. In addition, the below examples suggest some specific implementations to further clarify the details to a person of average skill in the art. The transmit diversity coding in these examples includes space-time block coding, selection of k transmit antennas, equal gain combining and maximum ratio combining. The spatial multiplexing in these examples includes spatial multiplexing using a maximum likelihood (ML) receiver, spatial multiplexing with a linear receiver such as a zero-forcing equalizer (ZFE) receiver and minimum mean square error (MMSE) receiver and spatial multiplexing with successive canceling receiver.

At a data transfer rate r and minimum Euclidean distance $d^2_{min,tx}$ of the transmitted constellation, the minimum Euclidean distance for space-time block coding (stbc) is $d^2_{min,stbc}$ on the receive end and is expressed in terms of channel coefficients matrix H. H is an $M_r x M_t$ matrix where M_r is the number of receive antennas **92** and M_t is the number of transmit antennas **72** known to the receiver with the Frobenius norm defined as:

$$\|H\|_F := \sqrt{\sum_{k=1}^{M_t}\sum_{m=1}^{M_r}|h_{km}|^2} = \sqrt{\sum_{k=1}^{\min(M_t,M_r)}\lambda_k^2}$$

where λ_k^2 are the squared singular values. This allows us to write:

$$\begin{aligned} d^2_{\min,stbc} &= \frac{\|H\|_F^2}{M_t} d^2_{\min,tx} \\ &= \frac{\sum_{k=1}^{M_t}\sum_{m=1}^{M_r}|h_{km}|^2}{M_t} d^2_{\min,tx} \\ &= \frac{\sum_{k=1}^{\min(M_t,M_r)}\lambda_k^2}{M_t} d^2_{\min,tx}. \end{aligned}$$

Clearly, performance is sensitive only to the power in H averaged by the number of transmit antennas **72**, i.e., $\|H\|_F^2/M_t$. The computations can be carried out, e.g., in computing block **110**, and more specifically in sub-block **114**, after it is supplied with the channel H from communication parameters computation block **104** and $d^2_{min,tx}$ from database **108**.

In selection diversity one (k=1) of the M transmit antennas **72** can be chosen to maximize a quality parameter such as received SNR. In this case, when data is transmitted at rate r and the minimum Euclidean distance is $d^2_{min,sel}$ on the transmit end, the minimum Euclidean distance $d^2_{min,sel}$ of the constellation has another expression at the receive end. Let h_k be the k-th column of H. Then the minimum Euclidean distance $d^2_{min,sel}$ in can be written as:

$$d^2_{min,sel} = \max_k \|h_k\|^2 d^2_{min,tx}.$$

It should be noted that $d^2_{min,sel} \geqq d^2_{min,stbc}$ since the maximum norm of one column is always greater than the average of the norms of all the columns. Using formalisms known in the art a more direct relationship can be written as:

$$\begin{aligned} d^2_{\min,sel} &\geq \frac{\lambda^2_{\max}(H) d^2_{\min,t}}{M_t} \\ &\geq \frac{\sum_{k=1}^{\min(M_t,M_r)}\lambda_k^2}{M_t} d_{\min,tx} \\ &= d^2_{\min,stbc}, \end{aligned}$$

and also

$$d^2_{min,sel} \leqq M_r \lambda_{max}^2(H) d^2_{min,tx}.$$

From the above it is clear that selection diversity is always better than space-time block coding for a given channel. Typically, antenna selection should be employed when at least some partial knowledge of H is available while space-time block coding can be used at system start-up when little or no knowledge of H is available.

For generalized transmit equal gain combining, one finds an optimal transmit vector which maximizes a quality parameter, e.g., SNR, under the constraint that the vector consists purely of phase coefficients. This vector, w, with its components corresponding to transmit signals, can be defined as:

$$w = [1 e^{j\phi_1} \ldots e^{j\phi_{N-1}}]/\sqrt{M_t}.$$

The solution is found by solving for $\phi_1, \ldots \phi_{N-1}$ such that w'H'Hw is maximized. This can be done by optimization techniques well-known in the art. It is useful to recognize that:

$$d^2_{min,egc} \leq d^2_{min,mrc} = d_{,min,tx} \lambda_{max}^2(H),$$

where mrc stands for maximum ratio combining as described below. In practice, one can set these two minimum Euclidean distances as approximately equal ($d^2_{min,erc} \approx d^2_{min,mrc}$) and therefore use techniques developed for maximum ratio combining.

For generalized transmit maximum ratio combining, one can find an optimal transmit vector which maximizes a quality parameter, e.g., SNR. It should be noted that this is usually the best of such linear techniques. This vector, once again denoted w, is normalized such that $\|w\|^2=1$ and is found by maximizing $E_s w'H'Hw/N_o$ subject to this normalization condition. The solution, found through linear algebra, is $w=w_{max}$ the correct singular vector corresponding to the maximum singular value. Given this one can write $d^2_{min,mrc}$ as:

$$d^2_{min,mrc} = d^2_{min,tx} w'H'Hw = d^2_{min,tx} \lambda_{max}^2(H).$$

It should be noted that $d^2_{min,mrc} \geqq d^2_{min,egc} \geqq d^2_{min,sel}$.

When employing spatial multiplexing the computations can be carried out, e.g., by sub-block **112** in computing block **110**. In spatial multiplexing the type of receive unit **90** is important.

In the first example receive unit **90** is of the ML type. Let s and ŝ be the transmitted and hypothesized (received) vectors, respectively, both of dimensions $M_t x1$. The coefficients in these vectors come from the selected QAM constellation (with |A| points) which is assumed the same for each of transmit antennas **72**. The average power of the per-antenna constellation is taken to be one. Let $d^2_{min,s}$ denote the minimum distance of this per antenna constellation. Let S denote the set of all $|A|^{M_t}$ possible s vectors. Then

we can write the minimum Euclidean distance $d^2_{min,sm-ml}$ the received constellation as:

$$d^2_{\min,sm-ml} = \arg\min_{s,\hat{s}\in\hat{S}} \frac{\|H(s-\hat{s})\|^2}{M_t}.$$

Using well-known mathematical techniques bounds and approximations can be used to simplify this expression. For example, the upper bound on $d^2_{min,sm-ml}$ can be defined by denoting E as the space of error vectors e where $E=\{s-\hat{s}\neq 0 | s, \hat{s}\in S\}$, and $\tilde{E}$ as the space of error vectors with some of the error vectors removed therefrom as follows:

$$d^2_{\min,sm-bn} \leq \arg\min_{e\in\tilde{E}} \frac{\|He\|^2}{M_t},$$

where $\underline{e}$ is an element of $\tilde{E}$. Alternatively, a lower bound on $d^2_{min,sm-ml}$ can be defined as follows:

$$d^2_{\min,sm-ml} \geq \frac{\lambda^2_{\min}(H)d^2_{\min,s}}{M_t}.$$

The upper bound is optimistic, meaning that it will tend to predict a minimum Euclidean distance which may be greater than it actually is in practice. The lower bound is pessimistic, meaning that it will tend to predict a minimum Euclidean distance which may be smaller than in practice. A person of average skill in the art will appreciate that, depending on the required reliability of the communication system either bound can be used. Alternatively, the two bounds can be averaged or used together in some other manner to yield the minimum Euclidean distance in spatial multiplexing with ML receive unit **90**.

In another example receive unit **90** is a successive receiver, which estimates a single data stream, subtracts that stream out, estimates the next data stream, subtracts it out and so on. The performance of this type of receiver is computed based on the following algorithm:

1) start with M_t data streams and let H_i=H;
2) find G, which is a ZF/MMSE inverse of H;
3) let g_i be the row of G with the minimum norm, i.e., $\|g_i\|^2 \leqq \|g_j\|^2$ for all $j\neq i$;
4) apply g_i to H to estimate the i-th stream of data;
5) subtract out the i-th stream of data and remove the i-th column of H to form a new channel coefficients matrix H_{i-1};
6) repeat the above steps using the new (reduced) channel coefficients matrix H_{i-1}.

Let $\{g_i\}_{i=1}^{M_1}$ be the sequence of linear equalizers with results from the above recursion. Then we can estimate the performance of receive unit **90** (assuming no feedback errors) as follows:

$$d^2_{\min,cnc} = \arg\min_{\{g_i\}_{i=1}^{M_t}} \frac{d^2_{\min,s}\|g_iH_i\|^2}{\|g_i\|^2 M_t}$$

The performance is essentially determined by linear receiver g_i which has the highest norm. When receive unit **90** is a ZF receiver, then the above expression simplifies to:

$$d^2_{\min,cnc} = \arg\min_{\{g_i\}_{i=1}^{M_t}} \frac{d^2_{\min,s}}{\|g_i\|^2 M_t}.$$

In yet another example, receive unit **90** is a linear receiver which first separates all the data streams using a linear equalizer (not shown) and then detects each stream independently. Let G be a linear receiver. For example, in the ZF case $G=H^+$ or in the MMSE case $G=[HH'+I/SNR]^{-1}H'$. Let g_i be the i-th column of G. Then the minimum Euclidean distance of the receiver can be written as:

$$d^2_{\min,ln} = \arg\min_{\{g_i\}_{i=1}^{M_t}} \frac{d^2_{\min,s}\|g_iH_i\|^2}{\|g_i\|^2}.$$

Once again, when receive unit **90** is a ZF receiver this equation can be rewritten as:

$$d^2_{\min,ln} = \arg\min_{\{g_i\}_{i=1}^{M_t}} \frac{d^2_{\min,s}}{\|g_i\|^2 M_t},$$

where the performance depends on the largest magnitude of g_i. Using a well-known property from linear algebra, namely $\max \|_i\|^2 \leqq 1/\lambda_{min}^2(H)$ the above equation can used to derive a lower bound as follows:

$$d^2_{\min,ln} \geq \frac{(\lambda^2(H))_{\min} d^2_{\min,s}}{M_t}.$$

In this case, the performance will be influenced by the minimum singular value of H.

When the selection between diversity coding and spatial multiplexing is performed based on the minimum Euclidean distance metric as described above it is advantageous to observe the following procedure. Once the estimate of H is available and fixed transmission rate r is given the mode of operation yielding the best performance is selected by:

1) computing $d^2_{min,Diversity}$ for the desired diversity coding;
2) computing $d^2_{min,SM}$ for the desired spatial multiplexing;
3) choosing diversity coding if $d^2_{min,Diversity} \geqq d^2_{min,SM}$ otherwise choosing spatial multiplexing.

Communication systems employing the metrics of the invention to select applied mapping schemes from proposed mapping schemes can be based on any multiple access technique including TDMA, FDMA, CDMA and OFDMA.

It will be clear to one skilled in the art that the above embodiment may be altered in many ways without departing from the scope of the invention. Accordingly, the scope of the invention should be determined by the following claims and their legal equivalents.

What is claimed is:

1. A method of controlling a communication parameter of a channel for transmitting data between a transmit unit having a number M of transmit antennas and a receive unit having a number N of receive antennas, said method comprising:

a) providing proposed mapping schemes for converting said data into symbols and assigning said data to transmit signals TS_p, where p=1 . . . M, for transmission from said M transmit antennas;

b) obtaining a measurement of said channel at said receiver;

c) using said measurement to compute for each of said proposed mapping schemes a minimum Euclidean distance $d_{min,rx}$ of said symbols when received; and

d) selecting an applied mapping scheme from said proposed mapping schemes based on said minimum Euclidean distance $d_{min,rx}$, thereby controlling said communication parameter.

2. The method of claim **1**, wherein said proposed mapping schemes comprise modulating said data in a constellation selected from the group consisting of PSK, QAM, GMSK, FSK, PAM, PPM, CAP, CPM.

3. The method of claim **1**, wherein said proposed mapping schemes comprise coding said data at predetermined coding rates.

4. The method of claim **1**, wherein said proposed mapping schemes comprise at least one method selected from the group consisting of diversity coding and spatial multiplexing.

5. The method of claim **4**, wherein said at least one method comprises diversity coding of order k ranging from 1 to M.

6. The method of claim **5**, wherein said diversity coding is selected from the techniques consisting of space-time block coding, transmit antenna selection, Equal Gain Combining, Maximum Ratio Combining and delay diversity coding.

7. The method of claim **5**, wherein said proposed mapping scheme comprises a random assignment of said transmit signals TS_p to a number k of said M antennas.

8. The method of claim **5**, wherein said proposed mapping scheme comprises an assignment of said transmit signals TS_p to a number k of said M antennas based on a required minimum Euclidean distance $d_{min,required}$.

9. The method of claim **8**, wherein said required minimum Euclidean distance $d_{min,required}$ is related to a quality parameter of said data.

10. The method of claim **4**, wherein said at least one method comprises spatial multiplexing of order k ranging from 1 to M.

11. The method of claim **10**, wherein said spatial multiplexing comprises a random assignment of said transmit signals TS_p to a number k of said M antennas.

12. The method of claim **10**, wherein said spatial multiplexing comprises an assignment of said transmit signals TS_p to a number k of said M antennas based on a required minimum Euclidean distance $d_{min,required}$.

13. The method of claim **12**, wherein said required minimum Euclidean distance $d_{min,required}$ is related to a quality parameter of said data.

14. The method of claim **10**, wherein said receive unit is selected from the group consisting of maximum likelihood receivers, zero forcing equalizer receivers, successive cancellation receivers and minimum mean square error receivers.

15. The method of claim **1**, wherein a minimum Euclidean distance $d_{min,tx}$ of said symbols when transmitted is stored in a database.

16. The method of claim **15**, wherein said database is located in a unit selected from the group consisting of said transmit unit and said receive unit.

17. The method of claim **1**, wherein said communication parameter is selected from the group consisting of data capacity, signal quality, spectral efficiency and throughput.

18. The method of claim **1**, further comprising:

a) determining a quality parameter of said data;

b) establishing a relation between said quality parameter and a required minimum Euclidean distance $d_{min,required}$ necessary to satisfy said quality parameter.

19. The method of claim **18**, wherein said quality parameter is selected from the group consisting of signal-to-interference noise ratio, signal-to-noise ratio, power level, level crossing rate, level crossing duration, bit error rate, symbol error rate, packet error rate, and error probability.

20. The method of claim **1**, wherein said transmit unit and said receive unit operate in accordance with at least one multiple access technique selected from the group consisting of TDMA, FDMA, CDMA, OFDMA.

21. The method of claim **20**, wherein said proposed mapping schemes comprise diversity coding selected from the group consisting of space-time block coding, transmit antenna selection, Equal Gain Combining, Maximum Ratio Combining and delay diversity coding.

22. A method of controlling a communication parameter of a channel for transmitting data between a transmit unit having a number M of transmit antennas and a receive unit having a number N of receive antennas, said method comprising:

a) providing proposed mapping schemes for converting said data into symbols and assigning said data to transmit signals TS_p, where p=1 . . . M, for transmission from said M transmit antennas;

b) obtaining a measurement of said channel at said receiver;

c) using said measurement to compute for each of said proposed mapping schemes a probability of error P(e) in said symbols when received; and

d) selecting an applied mapping scheme from said proposed mapping schemes based on said probability of error P(e), thereby controlling said communication parameter.

23. The method of claim **22**, wherein said proposed mapping schemes comprise modulating said data in a constellation selected from the group consisting of PSK, QAM, GMSK, FSK, PAM, PPM, CAP, CPM.

24. The method of claim **22**, wherein said proposed mapping schemes comprise coding said data at predetermined coding rates.

25. The method of claim **22**, wherein said proposed mapping schemes comprise at least one method selected from the group consisting of diversity coding and spatial multiplexing.

26. The method of claim **25**, wherein said at least one method comprises diversity coding of order k ranging from 1 to M.

27. The method of claim **26**, wherein said diversity coding is selected from the techniques consisting of space-time block coding, transmit antenna selection, Equal Gain Combining, Maximum Ratio Combining and delay diversity coding.

28. The method of claim **26**, wherein said proposed mapping scheme comprises a random assignment of said transmit signals TS_p to a number k of said M antennas.

29. The method of claim **26**, wherein said proposed mapping scheme comprises an assignment of said transmit signals TS_p to a number k of said M antennas based on a required probability of error $P(e)_{req}$.

30. The method of claim **25**, wherein said at least one method comprises spatial multiplexing of order k ranging from 1 to M.

31. The method of claim **30**, wherein said spatial multiplexing comprises a random assignment of said transmit signals TS_p to a number k of said M antennas.

32. The method of claim 30, wherein said spatial multiplexing comprises an assignment of said transmit signals TS_p to a number k of said M antennas based on a required probability of error $P(e)_{req}$.

33. The method of claim 30, wherein said receive unit is selected from the group consisting of maximum likelihood receivers, zero forcing equalizer receivers, successive cancellation receivers and minimum mean square error receivers.

34. The method of claim 22, wherein a minimum Euclidean distance $d_{min,tx}$ of said symbols when transmitted is stored in a database.

35. The method of claim 34, wherein said database is located in a unit selected from the group consisting of said transmit unit and said receive unit.

36. The method of claim 22, wherein said communication parameter is selected from the group consisting of data capacity, signal quality, spectral efficiency and throughput.

37. The method of claim 22, wherein said transmit unit and said receive unit operate in accordance with at least one multiple access technique selected from the group consisting of TDMA, FDMA, CDMA, OFDMA.

38. The method of claim 37, wherein said proposed mapping schemes comprise diversity coding selected from the group consisting of space-time block coding, transmit antenna selection, Equal Gain Combining, Maximum Ratio Combining and delay diversity coding.

39. A communication system with a controlled communication parameter of a channel for transmitting data between a transmit unit having a number M of transmit antennas and a receive unit having a number N of receive antennas, said transmit unit having a mapping circuit comprising:

a) a conversion unit for converting said data into symbols;

b) an assigning unit for assigning said data to transmit signals TS_p, where p=1 . . . M, for transmission from said M transmit antennas, said converting and said assigning being in accordance with proposed mapping schemes;

said receive unit comprising:

a) a channel estimator for obtaining a measurement of said channel;

b) a computing block for computing for each of said proposed mapping schemes a minimum Euclidean distance $d_{min,rx}$ of said symbols when received; and

c) a selection block for selecting an applied mapping scheme from said proposed mapping schemes based on said minimum Euclidean distance $d_{min,rx}$, thereby controlling said communication parameter.

40. The communication system of claim 39, wherein said assigning unit comprises a diversity coding block and a spatial multiplexing block.

41. The communication system of claim 40, wherein said diversity coding block comprises at least one block selected from the group consisting of a space-time coding block, a transmit antenna selection block, Equal Gain Channel coding block, Maximum Ratio Channel coding block and delay diversity coding block.

42. The communication system of claim 40, wherein said receive unit is selected from the group consisting of maximum likelihood receivers, zero forcing equalizer receivers, successive cancellation receivers and minimum mean square error receivers.

43. The communication system of claim 39, further comprising a database for storing a minimum Euclidean distance $d_{min,tx}$ for said symbols when transmitted.

44. The communication system of claim 39, wherein said computing block is selected from the group consisting of blocks for computing data capacity, signal quality, spectral efficiency and throughput.

45. The communication system of claim 44, further comprising a quality parameter computation block for determining a quality parameter of said data, said quality parameter being selected from the group consisting of signal-to-interference noise ratio, signal-to-noise ratio, power level, level crossing rate, level crossing duration, bit error rate, symbol error rate, packet error rate, and error probability.

46. The communication system of claim 45, further comprising an assessment block for establishing a correlation between said quality parameter and a required minimum Euclidean distance $d_{min,required}$.

47. The communication system of claim 39, said communication system operating in accordance with at least one multiple access technique selected from the group consisting of TDMA, FDMA, CDMA, OFDMA.

48. A communication system with a controlled communication parameter of a channel for transmitting data between a transmit unit having a number M of transmit antennas and a receive unit having a number N of receive antennas, said transmit unit having a mapping circuit comprising:

a) a conversion unit for converting said data into symbols;

b) an assigning unit for assigning said data to transmit signals TS_p, where p=1 . . . M, for transmission from said M transmit antennas, said converting and said assigning being in accordance with proposed mapping schemes;

said receive unit comprising:

a) a channel estimator for obtaining a measurement of said channel;

b) a computing block for computing for each of said proposed mapping schemes a probability of error P(e) of said symbols when received; and

c) a selection block for selecting an applied mapping scheme from said proposed mapping schemes based on said probability of error P(e), thereby controlling said communication parameter.

49. The communication system of claim 48, wherein said assigning unit comprises a diversity coding block and a spatial multiplexing block.

50. The communication system of claim 49, wherein said receive unit is selected from the group consisting of maximum likelihood receivers, zero forcing equalizer receivers, successive cancellation receivers and minimum mean square error receivers.

51. The communication system of claim 48, wherein said diversity coding block comprises at least one block selected from the group consisting of a space-time coding block, a transmit antenna selection block, Equal Gain Channel coding block, Maximum Ratio Channel coding block and delay diversity coding block.

52. The communication system of claim 48, further comprising a database for storing a required probability of error $P(e)_{req}$.

53. The communication system of claim 48, wherein said computing block is selected from the group consisting of blocks for computing data capacity, signal quality, spectral efficiency and throughput.

54. The communication system of claim 53, further comprising a quality parameter computation block for determining a quality parameter of said data, said quality parameter being selected from the group consisting of signal-to-interference noise ratio, signal-to-noise ratio, power level, level crossing rate, level crossing duration, bit error rate, symbol error rate, packet error rate, and error probability.

55. The communication system of claim 48, said communication system operating in accordance with at least one multiple access technique selected from the group consisting of TDMA, FDMA, CDMA, OFDMA.

* * * * *