IN THE UNITED STATES PATENT AND TRADEMARK OFFICE

In re Patent of:	Anton Monk et al.	
U.S. Patent No.:	8,621,539 B1	Attorney Docket No.: 45035-0032IP1
Issue Date:	December 31, 2013	
Appl. Serial No.:	11/241,748	
Filing Date:	September 29, 2005	
Title:	PHYSICAL LAYER TRANSMITTER FOR USE IN A BROADBAND LOCAL AREA NETWORK	

DECLARATION OF ROCH A. GUERIN, PH.D. IN SUPPORT OF DISH'S PETITION FOR INTER PARTES REVIEW OF U.S. PATENT NO. 8,621,539

TABLE OF CONTENTS

I. QUALIFICATIONS AND BACKGROUND INFORMATION 1
II. LEGAL PRINCIPLES 6
A. Obviousness 6
III. Overview of conclusions formed 8
IV. BACKGROUND KNOWLEDGE ONE OF ORDINARY SKILL IN THE ART WOULD HAVE HAD PRIOR TO THE PRIORITY DATE OF THE '539 PATENT 9
V. INTERPRETATIONS OF THE '539 PATENT CLAIMS AT ISSUE 10
VI. The '539 Patent 10
A. Summary of the Patent 10
B. Summary of the Prosecution History 14
VII. Ground 1 – Hou in view of konschak 18
A. Hou (DISH-1005) 18
B. Konschak (DISH-1006) 24
C. Hou-Konschak Combination 26
1. Motivation to Combine 28
2. Wired and Wireless Systems 34
3. Reasonable Expectation of Success 35
D. Claim 1 38
1. Preamble 38
2. Element 1a 40
3. Element 1b 41
4. Element 1c 59
VIII. Ground 2 – hou in view of konschak and dapper 59
A. Dapper (DISH-1007) 59
B. Hou-Konschak-Dapper Combination 61
1. Motivation to Combine 62
2. Reasonable Expectation of Success 64
C. Claim 2 66

D. Claim 3 68
E. Claim 4 70
F. Claim 5 73
G. Claim 6 74
H. Claim 7 74
IX. Reservations 74
X. Conclusion 75

CHALLENGED CLAIMS

Claim 1	
[1pre]	A modem for communication to at least one node across at least one channel of a coaxial network, the modem comprising:
[1a]	a transmitter; and
[1b]	a MAC layer in signal communication with the transmitter, the MAC layer using at least one probe packet as an echo profile probe to measure node delay spread on the network and the MAC layer optimizing the preamble and cyclic prefix requirements or other parameters in response to the measured node delay spread on the network;
[1c]	wherein the transmitter communicates the at least one probe packet.
Claim 2	
[2]	The modem of claim 1 wherein the one probe packet has a payload, and the payload includes pseudo random time domain samples generated by a pseudo random sequence.
Claim 3	
[3]	The modem of claim 2 wherein the payload is transmitted with a binary phase shift keying (BPSK) modulated single carrier at the center frequency of the channel.
Claim 4	
[4]	The modem of claim 3 wherein a length of the one probe packet is provided by the MAC layer.
Claim 5	
[5]	The modem of claim 1 wherein the one probe packet has a payload, and the payload consists of pseudo random time domain samples generated by a pseudo random sequence.
Claim 6	
[6]	The modem of claim 5 wherein the payload is transmitted with a binary phase shift keying (BPSK) modulated single carrier at the center frequency of the channel.
Claim 7	
[7]	The modem of claim 6 wherein a length of the one probe packet is provided by the MAC layer.

EXHIBIT LIST

DISH-1001	U.S. Patent 8,621,539 to Monk *et al.* ("the '539 patent")
DISH-1002	Excerpts from the Prosecution History of the '539 Patent ("the Prosecution History")
DISH-1003	Declaration of Dr. Roch Guerin
DISH-1004	Curriculum Vitae of Dr. Roch Guerin
DISH-1005	U.S. Patent 6,898,755 to Hou ("Hou")
DISH-1006	European Patent Publication No. EP1065855 to Konschak *et al.* ("Konschak")
DISH-1007	U.S. Patent No. 6,366,585 to Dapper *et al.* ("Dapper")
DISH-1008	U.S. Patent No. 6,650,624 to Quigley *et al.* ("Quigley")
DISH-1009	U.S. Patent No. 6,594,305 to Roeck *et al.* ("Roeck")
DISH-1010	U.S. Patent No. 7,230,909 to Raissinia *et al.*
DISH-1011	U.S. Patent No. 7,433,296 to Tsuie
DISH-1012	U.S. Patent No. 6,654,431 to Barton *et al.*
DISH-1013	U.S. Patent No. 6,956,865 to Khaunte *et al.*
DISH-1014	U.S. Patent No. 7,633,900 to Hwang *et al.*
DISH-1015	U.S. Patent Application Publication No. 2002/0137464 to Dolgonos *et al.*
DISH-1016	U.S. Patent No. 6,891,792 to Cimini Jr. *et al.*
DISH-1017	U.S. Patent No. 6,594,251 to Raissinia *et al.*

DISH-1018	U.S. Patent Application Publication No. 2002/0191684 to Min *et al.*
DISH-1019	Complaint filed in *Entropic Communications, LLC v. DISH Network Corporation, et al.*, Case No. 2:23-cv-01043 (C.D. Cal. Feb. 10, 2023)
DISH-1020	Proof of Service on DISH Network Corporation in *Entropic Communications, LLC v. DISH Network Corporation, et al.*, Case No. 2:23-cv-01043 (C.D. Cal. Feb. 23, 2023)
DISH-1021	Proof of Service on DISH Network LLC in *Entropic Communications, LLC v. DISH Network Corporation, et al.*, Case No. 2:23-cv-01043 (C.D. Cal. Feb. 23, 2023)
DISH-1022	Proof of Service on DISH Network Service, LLC in *Entropic Communications, LLC v. DISH Network Corporation, et al.*, Case No. 2:23-cv-01043 (C.D. Cal. Feb. 23, 2023)
DISH-1023	Proof of Service on DISH Network California Service Corporation in *Entropic Communications, LLC v. DISH Network Corporation, et al.*, Case No. 2:23-cv-01043 (C.D. Cal. Feb. 23, 2023)
DISH-1024	U.S. Patent Application Publication No. 2002/0089995 to Shalvi *et al*.
DISH-1025	U.S. Patent No. 7,246,368 to Millet *et al*.
DISH-1026	*Transceiver*, Hargrave's Communications Dictionary (2001)
DISH-1027	*Transceiver*, Wiley Electrical and Electronics Engineering Dictionary (2004)
DISH-1028	*Transceiver*, Dictionary of Communications Technology (3rd Ed. 1998)
DISH-1029	Data-Over-Cable Service Interface Specifications DOCSIS 1.0

DISH-1030	U.S. Patent No. 7,295,518 to Monk *et al*.
DISH-1031	U.S. Reissued Patent No. RE46,206 to Jorgensen
DISH-1032	Frederiksen, F.B. and Prasa,d R., "An overview of OFDM and Related Techniques Towards Development of Future Wireless Multimedia Communications," *2002 IEEE Radio and Wireless Conference*, pp. 19-22 (2002)
DISH-1033	U.S. Patent No. 7,705,777 to Sanderford, Jr. *et al.*
DISH-1034	U.S. Patent No. 6,665,382 to Dunn,*et al.*
DISH-1035	Federal Court Management Statistics for September 2023 published by the Administrative Office of the U.S. Courts, retrieved from https://www.uscourts.gov/sites/default/files/data_tables/fcms_na_distcomparison0930.2023.pdf
DISH-1036	Order Granting Stipulation Setting Claim Construction Schedule, *Entropic Communications, LLC v. DISH Network Corporation et al*., Case 2:23-cv-01043-JWH-KES (CDCA)
DISH-1037	LegalMetric Time to Trial Report, Central District of California, Patent Cases (Jan. 2021 – Nov. 2023)

DECLARATION OF ROCH A. GUERIN

I, Roch Guerin, Ph.D., declare:

I. QUALIFICATIONS AND BACKGROUND INFORMATION

1. I am the Department Chair of the Computer Science & Engineering department at Washington University in St. Louis.

2. I earned my diplôme d'ingénieur (1983) from École nationale supérieure des télécommunications, in Paris, France. Thereafter, I earned my M.S. (1984) and Ph.D. (1986) in electrical engineering from The California Institute of Technology in Pasadena, California.

3. Prior to becoming a professor in engineering, I held various positions at the IBM T.J. Watson Research Center. Specifically, from 1986 to 1990, I was a research staff member within the Communication Department, where I worked to design and evaluate high-speed switches and networks. From 1990 to 1991, I was a research staff member on assignment to the IBM High Performance Computing and Communications Department, where I worked to develop and deploy an integrated broadband network. In particular, the department focused on developing packet switching technology suitable for deployment over broadband networking infrastructures that were emerging at the time, including broadband coaxial networks. From 1992 to 1993, I was the manager of Network System Design within IBM's Security and Networking Systems Department, where I supervised a group

of researchers investigating new network algorithms and architectures. From 1994 to 1997, I was the manager of Broadband Networking within the same Security and Networking Systems Department at IBM, where I led a group of researchers in the area of design, architecture, and analysis of broadband networks. From 1997 to 1998, I was the manager of Network Control and Services within IBM's Security and Networking Systems Department, where I led a group responsible for networking and distributed applications, including topics such as advance reservations, policy support, including for Resource Reservation Protocol (RSVP), quality of service (QoS) routing, and security, and integrated switch and scheduling designs.

4. Outside of IBM's T.J. Watson Research Center, I was the Director of the Telecommunications and Networking Professional Master's Program at the University of Pennsylvania from 1999 to 2001. From 2001 to 2004, I founded and served as CEO, then Chief Scientist, of Ipsum networks while on leave from the University of Pennsylvania. Ipsum networks pioneered the concept of Route Analytics and its use in performance and service management software for IP networks.

5. I have been a professor of engineering for the past twenty-five years. As such, but prior to becoming the chair of the Computer Science & Engineering department at Washington University in St. Louis, I was the Alfred Fitler Moore Professor of Telecommunications Networks (an honorary chair) in the Department

of Electrical and Systems Engineering at the University of Pennsylvania. As a professor of engineering, I have taught many courses in networking, including Networking Fundamentals (TCOM 501) and Advanced Networking Protocols (TCOM 502), which addressed, among other things, communications over different types of broadband networks and the Internet.

6. I have authored more than fifty journal publications, including "On the Feasibility and Efficacy of Protection Routing in IP Networks," which was honored with the IEEE INFOCOM 2010 Best Paper Award. I have been named a Fellow by both the IEEE and ACM, and from 2009 to 2012 I was the Editor-in-Chief of the IEEE/ACM Transactions on Networking. Furthermore, I am a named inventor on over thirty issued U.S. patents.

7. My current and complete *curriculum vitae*, which details my educational and professional background and includes a listing of most of my publications is attached as Exhibit DISH-1004 to DISH's Petition for Inter Partes Review of U.S. Patent No. 8,621,539 (the "'539 patent").

8. I have been retained on behalf of DISH to analyze and offer technical opinions relating to the '539 patent and prior art references relating to its subject matter. In forming my opinions, I read and considered the '539 patent, its prosecution history, and these materials:

DISH-1001 U.S. Patent 8,621,539 to Monk *et al.* ("the '539 patent")

DISH-1002	Excerpts from the Prosecution History of the ’539 Patent (“the Prosecution History”)
DISH-1003	Declaration of Dr. Roch Guerin
DISH-1004	Curriculum Vitae of Dr. Roch Guerin
DISH-1005	U.S. Patent 6,898,755 to Hou (“Hou”)
DISH-1006	European Patent Publication No. EP1065855 to Konschak *et al.* (“Konschak”)
DISH-1007	U.S. Patent No. 6,366,585 to Dapper *et al.* (“Dapper”)
DISH-1008	U.S. Patent No. 6,650,624 to Quigley *et al.* (“Quigley”)
DISH-1009	U.S. Patent No. 6,594,305 to Roeck *et al.* (“Roeck”)
DISH-1010	U.S. Patent No. 7,230,909 to Raissinia *et al.*
DISH-1011	U.S. Patent No. 7,433,296 to Tsuie
DISH-1012	U.S. Patent No. 6,654,431 to Barton *et al.*
DISH-1013	U.S. Patent No. 6,956,865 to Khaunte *et al.*
DISH-1014	U.S. Patent No. 7,633,900 to Hwang *et al.*
DISH-1015	U.S. Patent Application Publication No. 2002/0137464 to Dolgonos *et al.*
DISH-1016	U.S. Patent No. 6,891,792 to Cimini Jr. *et al.*
DISH-1017	U.S. Patent No. 6,594,251 to Raissinia *et al.*
DISH-1018	U.S. Patent Application Publication No. 2002/0191684 to Min *et al.*

DISH-1019	Complaint filed in *Entropic Communications, LLC v. DISH Network Corporation, et al.*, Case No. 2:23-cv-01043 (C.D. Cal. Feb. 10, 2023)
DISH-1020	Proof of Service on DISH Network Corporation in *Entropic Communications, LLC v. DISH Network Corporation, et al.*, Case No. 2:23-cv-01043 (C.D. Cal. Feb. 10, 2023)
DISH-1021	Proof of Service on DISH Network LLC in *Entropic Communications, LLC v. DISH Network Corporation, et al.*, Case No. 2:23-cv-01043 (C.D. Cal. Feb. 10, 2023)
DISH-1022	Proof of Service on DISH Network Service, LLC in *Entropic Communications, LLC v. DISH Network Corporation, et al.*, Case No. 2:23-cv-01043 (C.D. Cal. Feb. 10, 2023)
DISH-1023	Proof of Service on DISH Network California Service Corporation in *Entropic Communications, LLC v. DISH Network Corporation, et al.*, Case No. 2:23-cv-01043 (C.D. Cal. Feb. 10, 2023)
DISH-1024	U.S. Patent Application Publication No. 2002/0089995 to Shalvi *et al*.
DISH-1025	U.S. Patent No. 7,246,368 to Millet *et al*.
DISH-1026	*Transceiver*, Hargrave's Communications Dictionary (2001)
DISH-1027	*Transceiver*, Wiley Electrical and Electronics Engineering Dictionary (2004)
DISH-1028	*Transceiver*, Dictionary of Communications Technology (3rd Ed. 1998)
DISH-1029	Data-Over-Cable Service Interface Specifications DOCSIS 1.0
DISH-1030	U.S. Patent No. 7,295,518 to Monk *et al*.

DISH-1031 U.S. Reissued Patent No. RE46,206 to Jorgensen

DISH-1032 Frederiksen, F.B. and Prasa,d R., "An overview of OFDM and Related Techniques Towards Development of Future Wireless Multimedia Communications," *2002 IEEE Radio and Wireless Conference*, pp. 19-22 (2002)

DISH-1033 U.S. Patent No. 7,705,777 to Sanderford, Jr. *et al.*

DISH-1034 U.S. Patent No. 6,665,382 to Dunn,*et al.*

II. LEGAL PRINCIPLES

A. Obviousness

9. I have been informed that a patent claim is invalid as "obvious" under 35 U.S.C. § 103 in light of one or more prior art references if it would have been obvious to a POSITA, taking into account (A) the scope and content of the prior art, (B) the differences between the prior art and the claims, (C) the level of ordinary skill in the art, and (D) any so called "secondary considerations" of non-obviousness, which include: (i) "long felt need" for the claimed invention, (ii) commercial success attributable to the claimed invention, (iii) unexpected results of the claimed invention, and (iv) "copying" of the claimed invention by others.

10. For purposes of my analysis and because I know of no indication from the patent owner or others to the contrary, I have applied a date of December 2, 2004, as the date of invention in my obviousness analyses, although in many cases the same analysis would hold true even if the priority date was slightly earlier than

December 2, 2004.1 Likewise, my opinions would not change if the priority date were later, e.g., in September 29, 2005, when the application that issued as the '539 patent was filed. In other words, my opinions do not change regardless of whether the priority date is in December 2004 or September 2005.

11. I have been informed that a claim can be obvious in light of a single prior art reference or multiple prior art references. To be obvious in light of a single prior art reference or multiple prior art references, there must be a reason to modify the single prior art reference, or combine two or more references, in order to achieve the claimed invention. This reason may come from a teaching, suggestion, or motivation to combine, or may come from the reference or references themselves, the knowledge or "common sense" of one skilled in the art, or from the nature of the problem to be solved, and may be explicit or implicit from the prior art as a whole. I have been informed that the combination of familiar elements according to known methods is likely to be obvious when it does no more than yield predictable results.

---

[1] The earliest-filed applications to which the '539 patent claims priority, U.S. Provisional Application Nos. 60/633,091, 60/632,797, and 60/633,002, were each filed on December 2, 2004. DISH-1001, Cover.

I also understand it is improper to rely on hindsight in making the obviousness determination.

12. I have been informed that a claim can be obvious if the prior art contained a base device, system, or method upon which the claim can be seen as an improvement; the prior art contained a known technique that is applicable to the base device, system or method; one of ordinary skill in the art would have been capable of applying the known technique to the base device, system, or method that was ready for improvement; and the results of applying the known technique to the base device, system or method would have been predictable to one of ordinary skill in the art.

III. OVERVIEW OF CONCLUSIONS FORMED

13. Based on my review of the materials considered and my knowledge and experience in the telecommunications field, it is my opinion that a person of ordinary skill in the art ("POSITA") would have found claims 1-7 of the '539 patent obvious at the time of the alleged invention.

14. Specifically, it is my opinion that a POSITA would have found claim 1 obvious over Hou in view of Konschak, and in view of their background knowledge of point-to-multipoint coaxial cable networks and telecommunications channels, including the use of OFDM for communications in such networks.

15. Further, it is also my opinion that a POSITA would have found claims 2-7 obvious over Hou in view of Konschak and Dapper, and in view of their background knowledge of point-to-multipoint coaxial cable networks and telecommunications channels, including the use of OFDM for communications in such networks. .

IV. BACKGROUND KNOWLEDGE ONE OF ORDINARY SKILL IN THE ART WOULD HAVE HAD PRIOR TO THE PRIORITY DATE OF THE '539 PATENT

16. Based on the foregoing and upon my experience in the area, a POSITA relating to the subject matter of the '539 patent as of December 2, 2004 would have had (i) a bachelor-level degree in electrical engineering, computer engineering, or a related field, and three or more years of experience working in signal processing and/or communications systems/networks; (ii) a master's degree in electrical engineering, computer engineering, or a related field, and at least one year of experience in signal processing and/or communications systems/networks; or (iii) a doctoral degree in electrical engineering, computer engineering, or a related field, and at least some experience in signal processing and/or communications systems/networks. That said, additional education could substitute for professional experience, or *vice versa*.

17. For at least the reasons I explained in the sections about my qualifications, I would consider myself to have qualified as a POSITA as of the earliest possible priority date for the '539 patent of December 2, 2004.

V. INTERPRETATIONS OF THE '539 PATENT CLAIMS AT ISSUE

18. I understand that, for purposes of my analysis in this *inter partes* review proceeding, the terms appearing in the patent claims should be interpreted under the *Phillips* standard. In that regard, I understand that the best indicator of claim meaning is its usage in the context of the patent specification as understood by a POSITA. I further understand that the words of the claims should be given their plain meaning unless that meaning is inconsistent with the patent specification or the patent's history of examination before the Patent Office. I also understand that the words of the claims should be interpreted as they would have been interpreted by a POSITA at the time of the invention was made (not today).

19. Because I do not know at what date the invention as claimed was made, I have used the earliest possible priority date of the '539 patent as the point in time for claim interpretation purposes. That date is December 2, 2004.

VI. THE '539 PATENT

A. Summary of the Patent

20. The technology of the ’539 patent relates to “[a] transmitter (‘PHY Transmitter’)” in a broadband cable network, or “BCN,” used for communicating between nodes in the network DISH-1001, 4:38-42.

21. The ’539 patent concerns transmissions of data in a coaxial cable network or “CCN,” which includes Customer Premise Equipment (“CPEs”) that receives signals via a point-of-entry (“POE”) through a network of coaxial cables and splitters. *Id.*, 1:25-42, 1:57-63. This type of point-to-multipoint coaxial network is applicant-admitted prior art and was well-known in the art at the time of the ’539 patent’s alleged invention. *Id.*

22. The ’539 patent explains that the PHY Transmitter “performs all of the necessary RF, analog and digital processing required for transmitting MAC messages,” and enables two-way communications between the nodes in the CCN. *Id.*, 4:42-46, 4:56-5:6.

23. As shown below in Figure 3 of the ’539 patent, there is a “logical mesh network” formed between the nodes in the CCN. *Id.*, 5:8-10, 6:48-51. For example, Node A in the figure can communicate with Nodes B, C, and D, and vice versa, and each other node can also communicate with each of the other three nodes in the network, through the depicted “channels.”

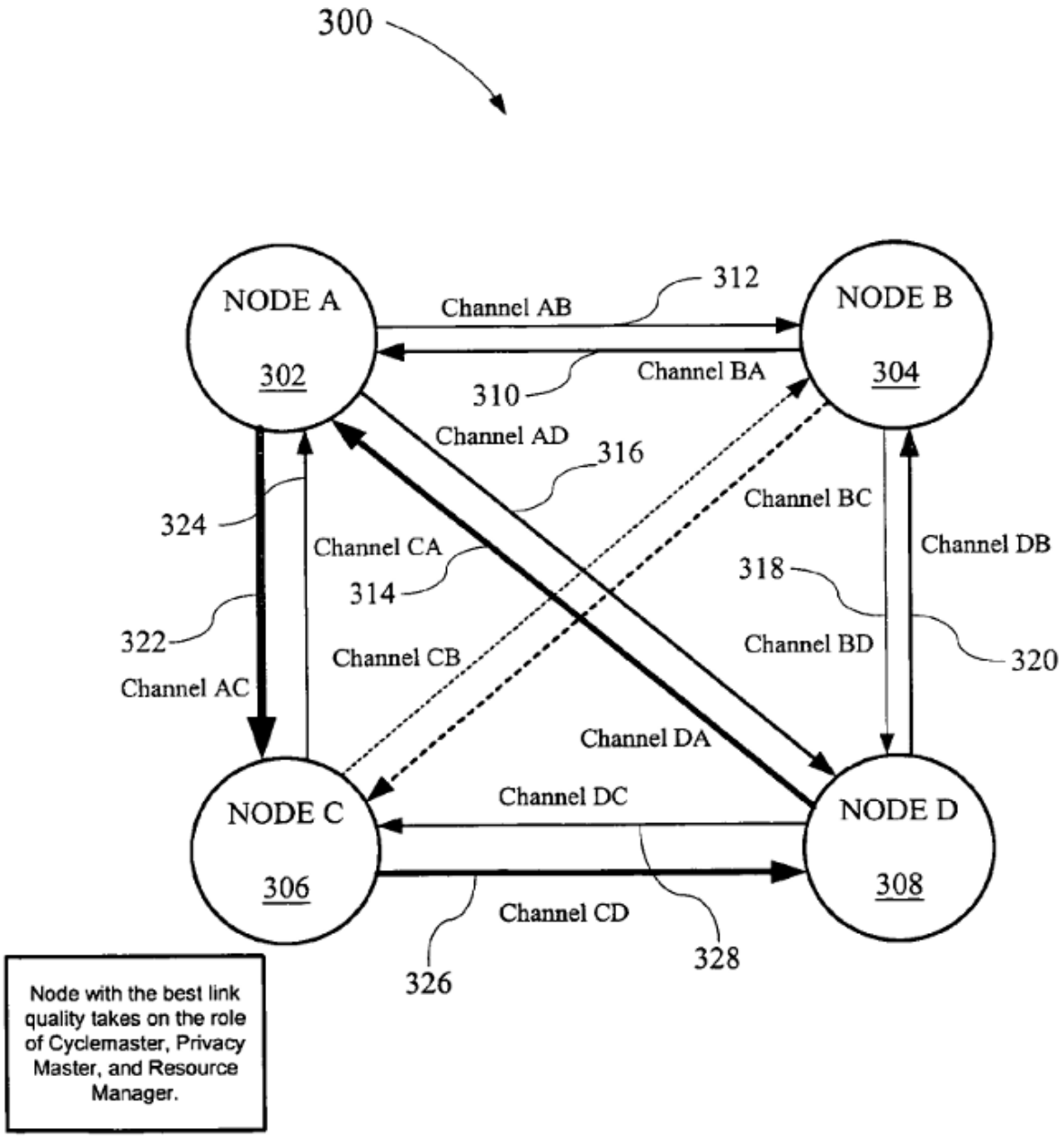

24. The PHY Transmitter is "capable of transmitting several types of signals, including data packets, link control packets, probe packets and Beacon packets" in the network. *Id.*, 5:17-20. The type of signal most relevant to this declaration is the probe packet.

25. The ’539 patent recognizes that, because of the nature of a coaxial cable network, each channel could have different channel responses. *Id.*, 6:52-55. To account for such responses, the ’539 patent uses “probe messages” between the nodes in the network, comparing the received probe waveform to a known probe waveform to determine “the best modulation format to use for the specific channel.” *Id.*, 6:52-67, 7:39-54. Although channel probing is an “infrequent requirement,” it may be done automatically if the channel is found to perform poorly. *Id.*, 7:52-56.

26. There are three types of probe messages disclosed in the ’539 patent, each with its own purpose and usage: (1) “Error Vector Measurements (‘EVM’) Probes which are the channel response probes used for network frequency response and modulation optimization,” (2) “IQ Imbalance (‘IQI’ and Hardware/RF Optimization Probes whose purpose is to be able to reduce hardware complexity and compensate for certain hardware imperfections of filters, mixers, local oscillators, etc.,” and (3) “Echo Profile (‘EP’) Probes whose purpose is to measure node delay spread on the network in order to optimize the preamble and Cyclic Prefix (‘CP’) requirements or other parameters.” *Id.*, 9:53-65. These probes are used for all new nodes that are “newly introduced into the BCN,” which “must” complete the channel estimation process with other nodes before they can send or receive data. *Id.*, 10:13-37.

27. The issued claims of the ’539 patent are directed to the last of these probe messages—the “echo profile probe.” Claim 1, the only issued independent claim, recites “using at least one probe packet as an echo profile probe” to “measure node delay spread on the network,” and “optimizing the preamble and cyclic prefix requirements or other parameters in response to the measured node delay spread on the network.” *Id.*, Cl. 1. The specification explains that the echo profile probe, or “EP Probe,” is “used to determine the impulse response of the inter-node channel,” and that “[t]he result determines the size of the cyclic prefix of the OFDM waveform.” *Id.*, 10:30-32.

B. Summary of the Prosecution History

28. The ’539 patents inventors are Anton Monk, Ron Porat, Wee Peng Goh, Magnus Berggren, Ron Lee, Edward Warner, Brett Bernath, and Yusuf Ozturk. DISH-1001 at Cover. Entropic Communications, Inc. is the Assignee. *Id.*

29. The application that issued as the ’539 patent is Application No. 11/241,748 (“the ’748 application”). The ’748 application was filed on 9/29/2005.

30. The ’748 application claims priority to four Provisional Applications (Nos. 60/633,091, 60/632,797, 60/633,002, and 60/632,856), each filed 12/2/2004.

31. The ’748 application was originally filed with 45 claims. DISH-1002, 40-47[2]. However, the claim that eventually issued as independent claim 1 was not among those originally filed claims.

32. The Applicant added the claim that eventually issued as independent claim 1 as claim 47 on February 4, 2010. *Id.*, 206. The amendment was made in response to a December 28, 2009 advisory action by the Examiner. *Id.*

33. In the February 4, 2010 response to the advisory action, the Applicant argued that prior art references cited by the Examiner (U.S. Patent Application Publication No. 2002/0166124 to Gurantz, U.S. Patent No. 6,085,248 to Sambamurthy, and U.S. Patent No. 7,302,700 to Mao) did not teach a MAC layer using a probe packet to measure node delay spread in order to optimize the preamble and cyclic prefix requirements or other parameters. *Id.*, 207-208.

34. In the next non-final office action dated 3/29/2010 and a subsequent final office action dated 10/1/2010, the Examiner found that claim 47 was rendered obvious by three different prior art references—U.S. Patent No. 6,052,380 to Bell, U.S. Patent Application Publication No. 2004/0218556 to Kim, and U.S. Patent No. 7,542,411 to Goh. *Id.*, 228, 292.

---

[2] Citations to DISH-1002 throughout refer to the pdf page number.

35. In responses dated July 27, 2010 and February 1, 2011 to the non-final and final office actions, respectively, the Applicant argued that the Goh reference was not prior art because it was owned by the same entity (Entropic Communications Inc.). *Id.*, 253, 312. The Applicant also argued that the cited references did not teach a MAC layer using a probe packet to measure delay spread to optimize the preamble and cyclic prefix requirements or other parameters. *Id.*, 253-254, 312-313.

36. In the next non-final office action, dated February 22, 2011, the examiner rejected claim 47 over Bell, Kim, and U.S. Patent Application Publication No. 2005/0120097 to Walton. *Id.*, 340.

37. In response, on May 23, 2011, the Applicant argued that the prior art disclosed the use of different cyclic prefixes with different amounts of delay spread, but did not teach a probe for measuring such a delay spread. *Id.*, 357-358.

38. In the next office action, a final rejection on August 1, 2011, the examiner again rejected claim 47 over Bell, Kim, and Walton. *Id.*, 379. In particular, the Examiner stated that the claim's recitation of a probe "whose purpose is to measure node delay spread on the network" (as the claim read at the time) was an intended use statement and did not carry any weight. *Id.*, 366.

39. In response, on October 28, 2011, the Applicant cancelled all remaining claims except claim 47, and amended claim 47 to specify that the MAC layer

"optimiz[es] the preamble and cyclic prefix requirements or other parameters," and does so "in response to the measured node delay spread on the network." *Id.*, 391.

40. In the next non-final office action, dated April 18, 2012, the Examiner rejected claim 47 over Bell, Walton, and U.S. Patent Application Publication No. 2005/0185632 to Draves Jr. *Id.*, 403.

41. On December 17, 2012, the Applicant added claims 48-53 (claims which eventually issued as claims 2-7) and responded to the April 18, 2012 office action, arguing that there was no motivation to combine the cited references, and that the prior art teaches using different cyclic prefixes based on expected delay spread, but not optimizing the preamble, cyclic prefix, or other parameters ***in response to*** a measured delay spread. *Id.*, 420 (emphasis in original).

42. In the next office action, a final rejection dated October 17, 2012, the Examiner maintained the rejection over Bell, Draves Jr., and Walton, stating that Walton disclosed determining an optimal cyclic prefix depending on expected delay spread, and the expected delay has to be determined and measured at one point. *Id.*, 430-431.

43. In response, on December 17, 2012, the Applicant made the same arguments—that 1) there was no motivation to combine the cited references, and 2)

that the prior art did not teach optimizing the preamble, cyclic prefix, or other parameters in response to a ***measured*** delay spread. *Id.*, 446-448.

44. Following an advisory action dated January 2, 2013, the Applicant submitted an appeal brief on April 12, 2013. *Id.*, 462. In the appeal brief, the Applicant argued that the prior art cited by the Examiner did not teach "using at least one probe packet as an echo profile probe to measure node delay spread on the network." *Id.*, 428-437, 446-448, 472.

45. The Notice of Allowance was issued by the Examiner on May 31, 2013. *Id.*, 484.

VII. GROUND 1 – HOU IN VIEW OF KONSCHAK

A. Hou (DISH-1005)

46. Hou is an issued U.S. Patent entitled "Method for Increasing Physical Layer Flexibility in Cable Modem Systems." DISH-1005, Cover. Hou was filed on August 24, 2001 and issued on May 24, 2005. *Id.* Hou discloses "a method for increasing physical layer flexibility in cable modem systems." *Id.*, 6:30-33; 6:5-6 ("The system as a whole achieves greater bandwidth efficiency through the exercise of PHY flexibility"). A POSITA would have understood that a PHY refers to a "physical layer," which was known to encompass the circuitry in a device that performs physical layer functions.

47. Similar to the '539 patent, Hou describes a cable modem network. The Hou cable modem network has a headend with a "Cable Modem Termination System" ("CMTS") that may communicate over "coaxial cable, Hybrid Fiber Coax(HFC), or wireless" networks by exchanging signals over the network with cable modems ("CMs") at numerous subscriber residences. DISH-1005, 1:21-38. Because Hou recites these three types of networks interchangeably, a POSITA would have understood Hou to teach techniques that can be applied to a coaxial cable network, a HFC network, and/or a wireless network.

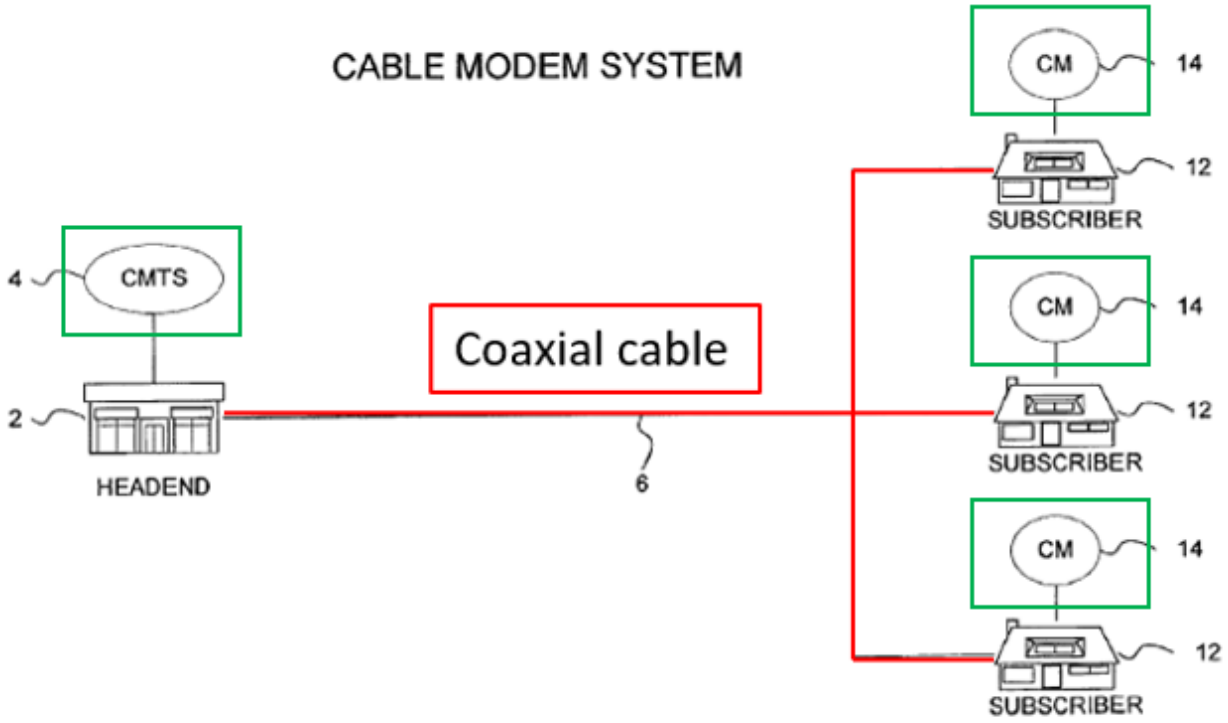

DISH-1005, Fig. 1 (PRIOR ART) (annotations added)

48. The goal of Hou is to improve the bandwidth efficiency of the channels between the CMs and CMTS in the network. *E.g.*, DISH-1005, Abstract (explaining invention is "directed to a method and apparatus for increasing the communication channel between the CM and the CMTS"), 6:5-6 (citing "greater bandwidth efficiency" as a benefit of the system).

49. Hou's system operates according to Data Over Cable Service Interface Specifications ("DOCSIS"), which was a well-known standard used in cable modem networks. *Id.*, 4:7-13, 6:42-45.

50. Hou aims to overcome localized and path-specific impairments to communications between the CMTS and the individual CMs in the network. *Id.*, 6:18-27. To that end, Hou's CMTS, using "upstream transmissions" from each CM, "determines whether the CM is dynamic burst profile mode capable." *Id.*, 6:35-38, 7:15-17. If so, the CMTS assigns a burst profile to each CM based on "performance measurements and the level of robustness needed" for each CM. *Id.*, 7:21-26. The CMTS is capable of taking several measurements to make the determination of the appropriate burst profile assignment, including "Total received codewords," "Uncorrectable codewords," "Correctable errored codewords," "Missed detections (i.e., non-acquisition of upstream bursts)," "Modulation Error Ratio (purity of channel)," "Signal to Noise Ratio," "Packet Loss," and "Echo Delay Spread (measurement of Amplitude of echo and its delay)." *Id.*, 13:1-15.

51. Hou also describes a "ranging protocol," which is used to compensate for physical distance between the CMTS and CMs by "mov[ing] the 'clock' of the individual CM 14 back or forth to compensate for the delay." *Id.*, 2:58-62. As part of the ranging process, the CMTS measures ranging transmissions between the CMTS and CM and informs the CM of a correction value for the clock. *Id.*, 2:63-66. Ranging also allows the CMTS to adjust the CMs' transmission power levels, required for "optimum performance" of the CMTS's demodulator. *Id.*, 2:66-3:3.

52. Although Hou does not describe the ranging protocol in detail, ranging was a well-known process in cable modem systems. Ranging starts with the CM sending a ranging request message ("RNG-REQ") to the CMTS. DISH-1018, [0082]; DISH-1013, 9:48-52 (referring to a "test message" from the CM to the CMTS); DISH-1025, 10:18-22 ("When a cable modem receives an SMTS it must transmit a ranging request (RNG-REQ) message"), 10:33-36. The CMTS will use the RNG-REQ message to measure characteristics of the channel from the CM to the CMTS, and send back a ranging response message ("RNG-RSP"). DISH-1018, [0082]; DISH-1013, 9:52-59 (CMTS calculates a "propagation value" or "offset value" from CM's transmission that is transmitted back); DISH-1025, 10:37-50 (CMTS "compares the received frequency and amplitude of [RNG-REQ] against an expected frequency and amplitude"). Using information in the RNG-RSP, the CM that sent the RNG-REQ will make adjustments to its transmission parameters,

including, as discussed in Hou, the timing and power level, among other parameters. DISH-1018, [0083]; DISH-1013, 9:55-59 ("the cable modem may adjust the timing of its upstream transmissions"); DISH-1025, 10:52-62 ("the ranging response message will include various pieces of information including a time offset, a frequency error, a power error, and a keep alive message . . . cable modem 105 . . . will adjust its frequency and power as necessary. . . .").

53. Hou explains that the "key parameters that relate to the robustness of the burst profile" are the "modulation type," the "length of the preamble," the "amount of Reed-Solomon error correction (T byes)," and "the size of the Red-Solomon codeword (k)." DISH-1005, 8:23-27. Different burst profiles assigned to the CMs have different values for these parameters, as illustrated below:

Burst Profile 1: Highly Robust

Burst Profile Attributes	
Modulation	QPSK
Differential Encoding	Off
Preamble Length	180
R-S Error Correction (T bytes)	10
R-S Codeword Information Bytes (k)	80
R-S Shortened Last Codeword	On
Scrambler Seed	142
Maximum Burst Length (minislots)[a]	0
Guard Time	8
Scrambler On/Off	On

Burst Profile 2: Moderately Robust

Burst Profile Attributes	
Modulation	QPSK
Differential Encoding	Off
Preamble Length	100
R-S Error Correction (T bytes)	4
R-S Codeword Information Bytes (k)	100
R-S Shortened Last Codeword	On
Scrambler Seed	142
Maximum Burst Length (minislots)[a]	0
Guard Time	8
Scrambler On/Off	On

Burst Profile 3: Less Robust

Burst Profile Attributes	
Modulation	16-QAM
Differential Encoding	Off
Preamble Length	64
R-S Error Correction (T bytes)	2
R-S Codeword Information Bytes (k)	120
R-S Shortened Last Codeword	On
Scrambler Seed	142
Maximum Burst Length (minislots)[a]	0
Guard Time	8
Scrambler On/Off	On

Id., 7:43-8:22.

54. "In general, given a CM's performance measurements using any burst profile, the CMTS can decide whether to change its burst profile." *Id.*, 8:59-62.

Hou's invention grants greater flexibility in DOCSIS systems for a "superior request-grant mechanism." *Id.*, 9:7-9.

B. Konschak (DISH-1006)

55. Konschak is a European patent publication entitled "Adaptation of cyclic extensions in an OFDM communication system." DISH-1006, Cover. Konschak published on January 3, 2001. *Id*. Konschak discloses a "method for transmitting and receiving information as OFDM-symbols in a wireless telecommunication system, in which between two consecutive OFDM-symbols a cyclic extension of a part of at least one of the OFDM-symbols is transmitted and received, respectively." *Id.* In particular, Konschak describes "determining a delay value representing a channel delay" and "setting a value for the length of said cyclic extensions on the basis of said delay value." *Id.*

56. Konschak measures delay spread and optimizes the cyclic prefix to account for "delayed symbols" or "echoes" of transmitted signals, also called "multipath effects." *Id.*, [0002], [0004], [0007]. These multipath effects and associated delay spreads were known in the art. *E.g.*, DISH-1011, 2:15-17 (discussing OFDM and its "effectiveness against the multi-path delay spread frequently encountered in mobile communications channels"). When an OFDM signal is transmitted in an environment with multiple possible paths to the destination—for example, in a wireless setting—different copies of the signal can

arrive at the destination at different times. For example, a copy of the signal traveling a straight-line path to a destination will arrive through a shorter path than one that bounces off a wall before arriving at its destination. Due to copies of the same signal arriving at different times, the destination will receive "echoes" of the same transmission. The delay spread was a known method of measurement for such multipath effects, using measurement of an impulse response.

57. The cyclic prefix was a known way to combat delay spread caused by multipath effects. Indeed, even the Applicant for the '539 patent did not dispute that the fact that "different cyclic prefixes are to be used with channels that have different amounts of delay spread" were known in the art. DISH-1002, 358. DISH-1014, 1:64-66 ("the introduction of a guard interval and a cyclic prefix as the guard interval further mitigate adverse effects of multipath propagation and delay spread on systems"); DISH-1011, 3:6-7 ("Based on the delay spread of the multi-path channel, a specific guard-time must be chosen"), 9:11-12 ("The OFDM symbol is then cyclically extended during the guard time"); DISH-1015, [0002] ("In OFDM, cyclic guard intervals are frequently used to improve performance in the presence of a multipath channel").

58. Konschak discloses determining the channel delay profile by "comparing a received reference symbol with an expected reference symbol" to extract "a channel delay profile from the comparison result," and determining the

"delay value" based on that result. DISH-1006, [0014]. The "length value of the cyclic extensions" can then be calculated "depending on the delay value." *Id.*, [0015].

59. Konschak describes a known method of estimation for channel characteristics in communications networks. A transmitting node will construct a signal that is known to the receiving node. The receiving node will then compare the actual signal it receives from the transmitting node to the expected signal, in order to estimate the channel characteristics.

C. Hou-Konschak Combination

60. As explained in VII.A above, Hou presents a base system that uses a coaxial cable with cable modems, and a CMTS that takes measurements between the CMTS and each CM to assign burst profiles with appropriate parameters for each CM's upstream transmissions.

61. Konschak discloses a similar method in that it is also directed to measuring certain characteristics of a channel (in particular, a delay profile resulting from multipath effects), and making adjustments to transmissions based on the measured parameters. Section VII.B.

62. The Hou-Konschak combination would have involved incorporation of Konschak's OFDM communications and adaptation of cyclic extensions to account for measured multipath effects (Konschak's delay profiles) into Hou's system.

63. Thus, Hou's system would have included CMTS-to-CM communications where upstream transmissions from the CM to the CMTS would have been used to assign burst profile parameters as disclosed in Hou, as well as adjusting the cyclic prefix to adapt to multipath or "echo" effects in the network as disclosed in Konschak. DISH-1005, 7:43-8:22, 8:59-62; DISH-1006, [0014], [0015].

64. A POSITA would have realized that Konschak's calculation of cyclic prefixes based on channel delay measurements would assist with reduction of transmission overhead, enhancing Hou's goal of more efficient bandwidth usage in the system. While, as discussed above in VII.B, the idea that cyclic prefixes would counter multipath delay spread effects was well-known in the art, it was also common in the art to use fixed cyclic prefix lengths (as Konschak points out), which would "yield[] a reduced user data transmission rate." DISH-1006, [0006]. Konschak teaches methods of reducing the overhead in transmissions resulting from such prior art fixed cyclic extensions by utilizing measurements of channel delay profiles. *Id.*, [0007].

65. A POSITA would have recognized that Hou discloses a similar concept—assigning burst profiles, with associated parameters, based on channel performance measurements to minimize physical layer overhead and increase bandwidth efficiency over cable modem communication channels. DISH-1005,

8:55-65. As such, a POSITA would have understood that incorporating Konschak's teachings would have further improved the bandwidth efficiency of Hou's system when utilizing OFDM communications.

66. A POSITA would have had many reasons to look to OFDM communications and associated solutions, as those disclosed in Konschak, and incorporate them in Hou's system. Hou and Konschak are both directed to similar solutions (measuring channel characteristics and adjusting transmission parameters based on the results of those measurements) to similar problems (bandwidth efficiency), and it would have been obvious to implement Konschak's measurements and parameters into Hou's system when Hou is adjusted to utilize OFDM communications as disclosed in Konschak.

1. Motivation to Combine

67. Cable modem point-to-multipoint systems such as that disclosed in Hou were known environments where multipath effects were a known problem in communications. *See*, *e.g.*, DISH-1010, 4:28-32. Hou recognizes multipath effects, disclosing "echo delay spread" as a measured parameter. DISH-1005, 13:13-34. Although Hou does not explain the term in detail, "delay spread" is a term of art that refers to delay effects resulting from multipath effects, as explained above in Section VII.B.

68. A POSITA would have been motivated to incorporate OFDM communications and techniques in Hou's system because OFDM was known as an effective solution to counter such multi-path delay spread effects. Indeed, numerous publications describe combatting multipath effects as an advantage of OFDM communications. DISH-1011, 2:15-17 (citing as a "main advantage[] of OFDM . . . its ***effectiveness against the multi-path delay spread*** frequently encountered in mobile communications channels"); DISH-1012, 1:33-38 (describing OFDM as "an ***effective means of mitigating Intersymbol Interference (ISI) on multipath fading channels*** . . . in environments where the Root-Mean-Square (RMS) ***delay spread is a significant impairment***"). As multipath effects were a known concern in point-to-multipoint networks like that disclosed in Hou and OFDM a known solution to those effects, a POSITA would have been motivated to utilize OFDM communications in Hou's cable network. A POSITA would also have understood that OFDM would enable more efficient use of channel bandwidth in upstream transmissions in point-to-multipoint systems like those disclosed in Hou, enhancing Hou's goal of bandwidth efficiency. DISH-1007, 19:43-20:1; DISH-1005, 8:55-65.

69. A POSITA improving Hou's system with OFDM communications would have been motivated to incorporate Konschak's teachings because both references are directed to solving similar problems in the art using similar techniques. Hou and Konschak each aim to optimize communication parameters

between devices in a network to make efficient use of limited resources. Hou explains that use of a limited number of burst profiles is a "major limitation" in cable networks and that "the capacity of the upstream channel could be more efficiently utilized," if the burst profiles were more individually adapted to individual capabilities of the various CMs. DISH-1005, 5:52-6:6. Konschak explains that using fixed-length cyclic extensions based on the worst case channel is inefficient because "actual transmission channel[s] exhibit[] better properties than the worst case channel," meaning that the overhead associated with fixed cyclic extensions is "not optimal," "yielding a reduced user data transmission rate." DISH-1006, [0006].

70. Hou and Konschak both offer solutions that operate according to the same principle—improving the bandwidth efficiency in the communications channel by measuring certain characteristics of the channel, and adjusting and optimizing the appropriate transmission parameters based on the results of those measurements. Hou describes a point-to-multipoint CMTS-CM network where the CMTS takes performance measurements of each CM, and assigns burst profiles to each CM depending on those measurements, with associated transmission parameters. DISH-1005, 6:37-43 ("the CMTS assigns a burst profile based on performance measurements on the CM and grants the CM a number of mini-slots per the burst profile parameters and the CM's request"), 13:1-15 (listing parameters). Konschak discloses a wireless network where a node communicating with another

node can measure the delay profiles of the channel between those nodes using a reference symbol, and set corresponding lengths for the cyclic extensions used in future transmissions. DISH-1006, [0011] ("Thus, the communication apparatus and the communication method according to the present invention measure the delay properties of the respectively used transmission channel, set a corresponding length value for the cyclic extensions and transmit the length value"), [0014].

71. A POSITA would have realized that the known technique of cyclic extension adaption disclosed in Konschak would improve Hou's system using OFDM communications, because it would reduce overhead associated with the cyclic prefix and therefore improve bandwidth usage. As both OFDM communications and cyclic prefix adaptation and cable modem network communications were known in the art, combining Hou and Konschak would have involved combining known elements according to known methods to yield predictable results.

72. A POSITA utilizing OFDM in Hou's network and seeking to achieve Hou's goal of improving bandwidth usage in a coaxial network would also have been motivated to look to Konschak because Konschak recognizes disadvantages of fixed-length cyclic extensions in prior art OFDM communications and instead discloses a method to adapt the prefix according to measured delay spread across a channel, and the POSITA would have extended Hou's method of assigning burst

profiles based on channel characteristics to improve transmission efficiency to include Konschak's adaptation of cyclic prefix length when utilizing OFDM in Hou's system. DISH-1005, 5:52-6:6; DISH-1006, [0005], [0006], [0007], [0011].

73. The "Echo Delay Spread" is one parameter that Hou measures for its burst profile assignments. *Id.*, 13:1-15. The assigned burst profiles also each include a "guard time." *Id*. The "guard time" in the assigned burst profiles is analogous to the cyclic prefix used to eliminate inter-symbol interference resulting from delay spread. *Id.*, 7:40-8:22; DISH-1014, 1:63-66.

74. Hou uses fixed guard times for all of its exemplary disclosed burst profiles. DISH-1005, 13:1-15. However, a POSITA would have recognized that using fixed values for guard times would waste resources, similar to how it was known that the use of fixed-length cyclic extensions resulted in wasted resources due to excessive overhead. *See* DISH-1006, [0005] ("In known OFDM-systems, the length of a cyclic extension is fixed and chosen to be longer than the maximum possible excess delay of a typical transmission channel").

75. As such, and since the POSITA would already have implemented OFDM communications in Hou's system, the POSITA would have recognized that Konschak's teachings regarding adaptation of cyclic extensions in OFDM communications based on measured multipath delay effects would predictably improve Hou's system by enhancing the efficiency of use of the available bandwidth

in Hou's communication channels. Indeed, Konschak confirms that using calculated cyclic extensions based on measured delay profiles would reduce the overhead associated with those transmissions. DISH-1006, [0005]-[0007].

76. A POSITA that incorporated OFDM communications in Hou's system would have sought to optimize the cyclic prefix used in the OFDM communications as taught by Konschak because Hou discloses measuring an "echo delay spread" from each CM to the CMTS. As discussed above in VII.B, the use of cyclic prefixes to counter multipath effects such delay spreads was well known. Indeed, statements made by the Applicant for the '539 patent, as well as several other publications, describe this well-known relationship. DISH-1002, 358 (admitting use of "different cyclic prefixes" to be "used with channels that have different amounts of delay spread" was in the art); DISH-1014, 1:63-66 ("guard interval and a cyclic prefix . . . mitigates adverse effects of multipath propagation and delay spread"); DISH-1011, 3:6-7 (discussing choice of guard times "based on" delay spreads of multi-path channels); DISH-1015, [0002] (discussing use of "cyclic guard intervals" in OFDM in multipath channels).

77. Hou already discloses measuring the echo delay spread of the channel of communication from each CM to the CMTS for assignment of burst profiles to those CMs. When using OFDM communications in Hou's network, it would have been obvious for a POSITA to incorporate Konschak's calculation of cyclic prefixes

based on measured channel multipath delay profiles to further enhance Hou's goal of channel bandwidth efficiency. DISH-1006, [0011]; DISH-1005, 5:53-6:6.

2. Wired and Wireless Systems

78. Although Hou discloses a system used in a wired (cable modem coaxial cable) network, and Konschak's OFDM disclosures relate to a wireless network, a POSITA would not have been discouraged from applying Konschak's teachings to Hou's system. In fact, it was common and generally known in the art that teachings from a wired network context could be applied to wireless networks, and that teachings from a wireless network context could be applied to wired networks.

79. Indeed, many considerations for communications across wired networks apply to communications across wireless networks, and vice versa. For example, while usually less prevalent than in wireless systems, wired systems—such as point-to-multipoint cable modem coaxial networks—also had known multipath effects. DISH-1010, 4:28-32 ("It is desirable to use OFDM in point to multipoint networks where multipath effects are a concern").

80. Consequently, a POSITA would have looked to references directed to wireless communications to improve wired communication systems, or likewise looked to references directed to wired communication systems to improve wireless communication systems. Several publications confirm that teachings from one environment would have been applicable to the other. DISH-1010, 4:6-7 (explaining

that the "DOCSIS v1.1 standard," which is a standard for communication over coaxial cable networks, "defines a MAC layer protocol that finds application in not only data over cable networks but also in wireless networks."); DISH-1013, 22:1-10 (Explaining that the invention, which is applicable to cable networks, "may be applied to any access or shared-access network," including wireless networks); DISH-1017, 4:15-18 (explaining a protocol "developed for transmission over cable systems" can be used for "upstream communications" in a wireless network); DISH-1016, 1:22-26 (explaining that a "good OFDM synchronization technique" can be applied both to wireless networks and ADSL or cable modems); DISH-1015, [0020] (explaining that "[t]he communications links" can be "wired (including for example, fibre, coaxial cable, twisted pair, etc.) or wireless"); DISH-1007, 18:48-56 (describing it is "apparent to one skilled in the art" that the architecture described can be used with wireless systems in addition to hybrid fiber coaxial networks).

81. Because Hou and Konschak disclose similar solutions to solve similar problems, as described above, a POSITA would have looked to and incorporated Konschak's wireless communication teachings into Hou's system.

3. Reasonable Expectation of Success

82. A POSITA would have been able to combine Hou and Konschak with a reasonable expectation of success. This is so at least because both Hou and Konschak are analogous art to the '539 patent.

83. Hou is from the same field of endeavor as the ’539 patent. Hou and the ’539 patent are both directed to improving communications in coaxial cable communication networks—Hou by “increasing physical layer flexibility” through “performance measurements” and assignment of burst profiles for bandwidth efficiency improvement, and the ’539 patent by similarly using channel measurements to optimize particular transmission parameters such as the cyclic prefix or preamble to measured channel characteristics. DISH-1005, 6:5-6, 6:30-45; DISH-1001, Abstract, 5:17-32, 9:62-65.

84. Konschak is also analogous art to the ’539 patent because Konschak is reasonably pertinent to the problems that the ’539 patent’s inventors faced and sought to solve. Konschak addresses the issue of transmission parameter adaption based on measured channel parameters—specifically, adapting the cyclic prefix in OFDM communications based on measured channel delay profiles, as did the ’539 patent’s inventors. DISH-1001, 9:56-65 (describing “Echo Profile probes” that are used by the system to “measure node delay spread,” using the results to “optimize the preamble and cyclic prefix (‘CP’) requirements or other parameters), 10:30-32 (similar); DISH-1006, Cover (describing “adapting the length of the cyclic extensions to the delay properties of the actually used transmission channel” to “significantly reduce[]” transmission overhead), [0015] (explaining setting the cyclic prefix length based on measured delay values using multiple methodologies,

including a lookup table or calculating a length "precisely adapted to the delay properties of the transmission channel")

85. Additionally, Hou and Konschak both describe ways to measure parameters over communications channels in a network and to adjust appropriate parameters for optimal communications. Considering Hou discloses measuring an echo delay spread of the channel from each CM to the CMTS (DISH-1005, 13:1-15), the notion of adjusting the cyclic prefix of communications based on measured delay properties would have been straightforward from a POSITA's perspective, particularly in light of the known relationship between delay spreads and cyclic prefixes, as described above. VII.B.

86. A POSITA would have expected Konschak's cyclic prefix adjustment technique to work in the context of Hou when using OFDM communications, because Hou employed transmission parameter adjustments in other aspects of its disclosure—for example, adjustment of the preamble length (which is a parameter of the burst profile) based on measurements of the channel. DISH-1005, 7:40-8:22. Incorporating Konschak's adaptation of cyclic prefixes to account for measured delay properties in Hou-Konschak's system using OFDM techniques would have been within the skill level of a POSITA, because a POSITA would have understood that cyclic prefixes are determined by delay spreads, and would have understood the

relationship between the two parameters. DISH-1002, 358; DISH-1014, 1:63-66; DISH-1011, 3:6-7; DISH-1015, [0002].

87. Thus, Hou-Konschak would have been a combination of known elements—Hou's assignment of burst profile parameter, on the one hand, and Konschak's cyclic prefix adaptation on the other--each performing functions it was known to perform (Hou's CMs having particular burst profiles for transmissions, Konschak's transmissions with cyclic prefixes adapted to the measured delay profiles for particular channels) to produce the predictable result of reducing overhead and improving channel bandwidth efficiency. A POSITA would have reasonably expected a successful outcome from combining Konschak's adaptation of cyclic prefixes based on measured delay spreads with Hou's cable modem network when using OFDM communications.

D. Claim 1

1. Preamble

[1pre] A modem for communication to at least one node across at least one channel of a coaxial network, the modem comprising. . .

88. I have been asked to consider whether the Hou-Konschak combination renders obvious the preamble of claim 1, but have not been asked to render an opinion regarding whether the preamble should be considered a limitation. If the preamble of claim 1 is deemed to be a limitation, it is my opinion that Hou-Konschak at least renders this limitation obvious.

89. Specifically, Hou discloses a "cable modem system" with a CMTS in communication with multiple CMs. DISH-1005, 1:7-10, 1:21-38. A POSITA would have understood that each of the CMTS and CMs includes a cable modem.

90. Figure 1 of Hou reproduced below illustrates the CMTS in communication with the various CMs, which communicates through channels of the "access network." *Id.*, 1:21-42.

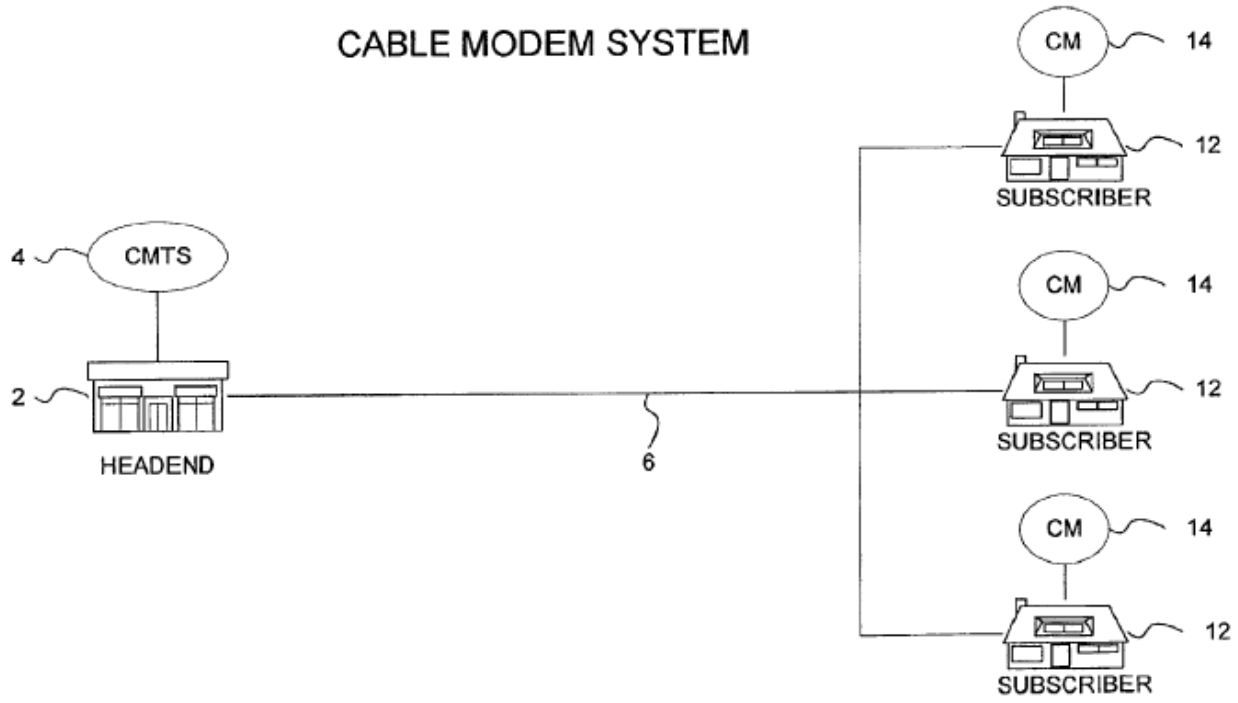

91. Hou explains that the access network can be "coaxial cable, Hybrid Fiber Coax(HFC), or wireless." *Id.*, 1:21-42. As such, to the extent the preamble is limiting, Hou discloses a "modem" (the CM) that communicates to a node (the CMTS) across a channel of a coaxial network (the access network).

2. Element 1a

[1a] a transmitter;

92. I have been asked to consider whether the Hou-Konschak combination renders obvious limitation [1a]. It is my opinion that Hou-Konschak discloses this limitation or renders this limitation obvious.

93. Hou describes or at least renders obvious a transmitter used for the same purpose as the transmitter described in the '539 patent. According to the'539 patent, the "PHY Transmitter provides the interface to the coaxial cable," "perform[ing] all of the necessary RF, analog and digital processing required for transmitting MAC messages on the coaxial communications channel." DISH-1001, 4:42-55. The "transmitter of the probe (packet)" transmits packets over the cable system. *Id.*, 10:28-29.

94. Hou's disclosure of data transmissions is consistent with the '539 patent's description of a transmitter. Hou's CMTS and CMs "receiv[e] and transmit[]" "signals" and data to and from each other over a coaxial cable network. DISH-1005, 1:21-42. *Id.*, 1:45-49, 2:30-41, 3:4-10, 3:34-36, 3:47-53, 3:60-62, 4:22-25, 6:18-22. Although Hou may not explicitly state that a "transmitter" is used for these communications, a POSITA would have at least found the transmitter inherent, or at least obvious, in view of Hou's disclosure of its transmissions over the network.

These disclosures are also similar to the '539 patent's disclosure of a transmitter used to transmit packets over the network. DISH-1001, 10:28-29.

95. Also suggesting that Hou includes a transmitter, Hou discloses the use of a "modulator" to convert digital data into radio-frequency (or RF) signals for transmission. *Id.*, 3:34-36. Use of modulators and RF transmitters was well-known in the art. Indeed, consistent with Hou's disclosures, a POSITA would recognize that cable modems like those described in Hou would typically include at least one a "transmitter" used to modulate and transmit signals over the network. DISH-1024, [0005], [0020] ("Each modulator . . . comprises a transmitter . . .").

96. A POSITA would have understood, or found obvious that, Hou's disclosure of a modulator suggests the use of transmitters in Hou's CMs that would be used to transmit data packets to the CMTS over the coaxial cable network. A transmitter was a known device for a CM to use to transmit the types of data packets and signals Hou discloses over a coaxial cable network.

3. Element 1b

[1b] a MAC layer in signal communication with the transmitter, the MAC layer using at least one probe packet as an echo profile probe to measure node delay spread on the network and the MAC layer optimizing the preamble and cyclic prefix requirements or other parameters in response to the measured node delay spread on the network; and

97. I have been asked to consider whether the Hou-Konschak combination renders obvious limitation [1b]. It is my opinion that Hou-Konschak renders this limitation obvious.

98. As this is a lengthy limitation, I break my discussion of the limitation into multiple parts below.

"a MAC layer in signal communication with a transmitter"

99. Each of Hou's "conventional cable modem[s]" includes "a tuner 42, a demodulator 44, a media access control (MAC) device 46, and a modulator 48." DISH-1005, 3:11-14. Hou also discloses a "MAC 46" that is "positioned above the upstream and downstream physical layer portions of the CM 14 and is involved with medium access control and management." *Id.*, 3:42-53.

100. Hou depicts the Open Systems Interconnection (OSI) for a DOCSIS cable modem, showing the "data link layer" above the physical layer, as in annotated Figure 4, below. *Id.*, 4:7-12.

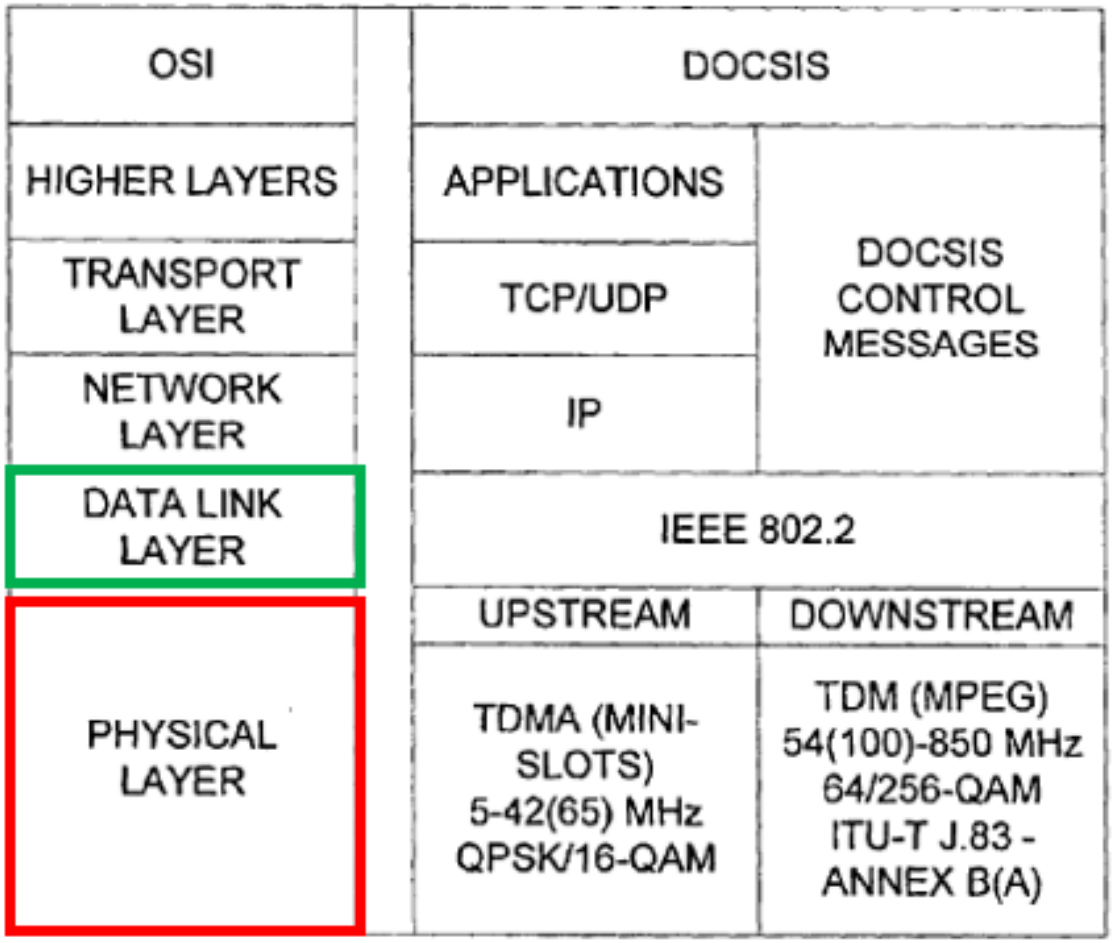

101. A POSITA would have recognized that the MAC layer was part of the depicted data link layer. As such, a POSITA would have understood Hou's description of a MAC positioned "above the physical layer" to refer to the MAC layer, which would have been a part of the data link layer depicted in Figure 4. DISH-1001, 4:51-55 ("an adjacent MAC Layer ***or Data Link Layer***"); DISH-1017, 4:31-33 (describing, as part of the " well-known OSI multi-level model of data communications," a MAC layer that is the "lowest sublayer of the data link layer");

DISH-1031, 41:17-29 ("Data link layer 404 lies on top of physical layer 402. Data link layer 404 can include a medium access control (MAC) layer 414 . . . .").

102. Additionally, as discussed above with respect to element [1a], Hou at least renders obvious the use of a transmitter via its disclosure of a modulator. A POSITA would have understood that Hou's transmitter would be in signal communication with the MAC layer. As depicted below in Figure 3 of Hou, the modulator, used for transmitting data over the network, is in signal communication with the MAC. DISH-1005, 3:11-23, 3:34-42.

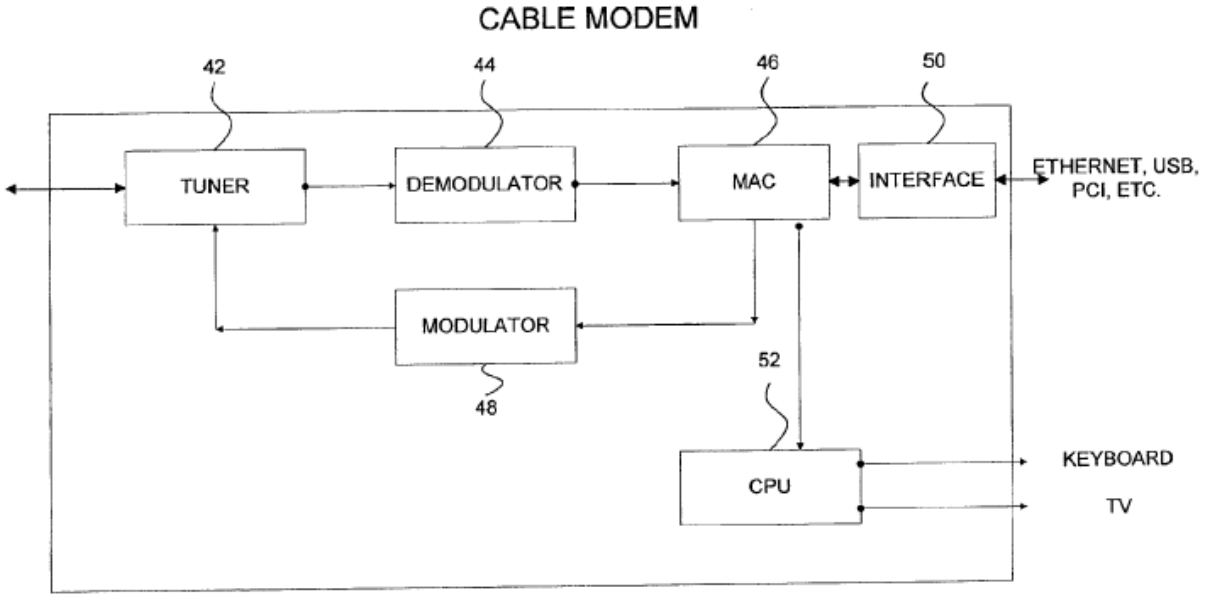

"the MAC layer using at least one probe packet as an echo profile probe to measure node delay spread on the network"

103. Hou's CMTS performs measurements for the CMs in the network based upon the CMs' upstream transmissions. DISH-1005, 6:37-43, 7:20-26, 8:44-46,

8:59-65. The measurements by the CMTS include measurements of an "Echo Delay Spread (measurement of Amplitude of echo and its delay)" and are taken "on a per CM basis." *Id.*, 13:1-18. The results of the measurements are used to "determine appropriate burst profiles to assign" to the CMs in the network. *Id.*, 13:1-18. This is consistent with the '539 patent's description of a receiving node that "analyz[es] the received signal" from a sending node, then sends "channel response information" back to the sending node which uses the information to "change its transmission format" to "optimize the link communications to the channel response." DISH-1001, 5:20-31.

104. A POSITA would have recognized that the echo delay spread disclosed in Hou refers to the same notion of delay spread that is discussed in the '539 patent. DISH-1001, 9:62-65 (discussing "Echo Profile ('EP') Probes" which '"measure node delay spread on the network in order to optimize the preamble and the Cyclic Prefix ('CP') requirements or other parameters"), 14:14-16 ("The cyclic prefix length is dependent on the multi-path delay spread in the cable system"). As discussed above, VII.B., "delay spread" was a well-known concept referring to the impact of echoes of transmissions caused by multipath reflections in communications networks.

105. Hou also renders obvious measuring the delay spread using a probe packet. Hou explains that the CMTS takes measurements using a "ranging

protocol." DISH-1005, 2:58-66. While ranging is not described in detail in Hou, as described above, POSITA would have understood that ranging refers to a well-known process in CMTS-to-CM point-to-multipoint cable networks, where messages are exchanged in order to configure transmission settings from the CM to the CMTS. VII.A. For example, Hou teaches using a ranging protocol to move the timing and/or transmit power level of each CM to compensate for propagation delays and ensure that the signals from the various CMs arrive at the CMTS at the same power levels. DISH-1005, 2:58-3:3. This was a commonly known use of a ranging procedure.

106. Other publications from prior to the '539 patent similarly discuss the ranging process used in cable networks for the same purpose. For example, U.S. Patent Publication No. 2002/0191684 ("Min"), explains a typical ranging process in a point-to-multipoint system according to the DOCSIS specification. The typical ranging process includes a ranging request message ("RNG-REQ") sent by each CM to the CMTS, and a ranging response message ("RNG-RSP") sent back by the CMTS to each CM. DISH-1018, [0081]-[0082]. The RNG-RSP contains information that the CM uses to adjust its parameters (including adjustments to "timing" and "power level") to optimize the future transmissions made between the CM and the CMTS. DISH-1018, [0083]-[0084]. A POSITA would thus have recognized that the ranging protocol disclosed in Hou, used to adjust timing and

power levels, refers to the known ranging processes as described, for example, in Min, and that such a ranging protocol would have included the same typical messages such as RNG-REQ and RNG-RSP messages and use of those messages for adjusting transmission parameters.

107. Hou does not discuss a specific type of transmission that must be used for conducting the measurements used in its system, or that "probe packets" as claimed in the '539 patent must be used for those measurements. Hou does, however, explain that each CM can use the same burst profile for the transmission being measured. DISH-1005, 8:44-65. Hou also explains that certain burst profiles are used for ranging and that certain burst types correspond to a particular burst profile, including the "initial ranging" and "periodic ranging" burst types. *Id.*, 4:32-42. It would have been obvious to a POSITA that the RNG-REQ messages exchanged during typical ranging protocols, as disclosed in Hou, would have been transmitted using a burst profile—presumably corresponding to ranging burst types—and would have been used to measure the parameters used by Hou's CMTS to assign burst profiles to the CMs.

108. Hou also renders obvious using that RNG-REQ message (like that described in Min) as a probe packet to measure node delay spread on the network. According to the '539 patent, the probe packet's "main function" is to "probe the network and its frequency response" for "internode link throughput optimization."

DISH-1001, 9:49-52. Of particular relevance to this claim limitation, the specific "echo profile probe," or "EP probe," is used to "measure node delay spread on the network." *Id.*, 9:56-65.

109. Hou's measurements are similar. Hou explains that its measurements are taken in order to determine whether CM's burst profile should be changed in order to improve bandwidth efficiency (or, as discussed in the '539 patent, "throughput"). DISH-1005, 8:59-65. One of the measurements that Hou teaches taking for that purpose is the "echo delay spread." *Id.*, 13:1-15. It would have been obvious to a POSITA to use the RNG-REQ message in ranging protocols like Hou's as a probe packet to take the measurements required by Hou's system—like the echo delay spread—to determine and return information regarding parameter adjustments to each CM. DISH-1005, 13:1-15. The RNG-REQ messages used in this manner would have been functionally equivalent to the "echo profile probe" described by the '539 patent.

110. As explained above, the ranging process was a well-known process in DOSCIS-compliant cable modem networks such as that described in Hou and was used by the CMTS to adjust the transmission parameters of the CMs the networks. DISH-1018, [0081]-[0084]. Given Hou's disclosure of the CMTS using the measured parameters such as echo delay spread to assign burst profiles to each CM based on those measured channel parameters, it would have been obvious to

implement those measurements using the existing ranging messages—such as RNG-REQ messages— to measure those parameters. DISH-1005, 13:1-15.

111. Additionally, in the Hou-Konschak combination, Konschak discloses the CM transmitting and CMTS receiving a "reference symbol," which is compared to an "expected reference symbol," and then used to measure "a channel delay profile from the comparison." DISH-1006, [0014]. A POSITA would have recognized that Konschak describes a known method of channel characterization where a certain known symbol is transmitted, and a receiving node that knows the expected symbol compares the received symbol to the expected symbol to determine channel characteristics. This description is also similar to the '539 patent's description of using probe packets to obtain "channel characterizations" by "comparing" a "received signal" to an "a priori known transmit signal format." DISH-1001, 5:17-32.

112. Konschak's channel delay profile is a measurement of "multipath effects" causing "echoes" of transmitted data that lead to "intersymbol interference." DISH-1006, [0002]. The '539 patent also explains that "echo profile probes" measure "delay spread" on the network to optimize the preamble and cyclic prefix, which is dependent on multi-path delay spread. DISH-1001, 9:62-65, 14:12-16; *see also* DISH-1002, 472 ("[t]he relationship between cyclic prefix length and multipath delay spread is well understood by those in the art").

113. A POSITA would thus have recognized that the delay profile measurements disclosed in Konschak correspond to the echo delay spread measurements disclosed in the '539 patent, because both measure signal transmission delays across the various frequencies being used. It would have been obvious to a POSITA to rely upon a reference symbol like that of Konschak to enhance Hou's CM transmissions, which already include a measurement of echo delay spread, in order to obtain Konschak's disclosed benefits (throughput improvement), to further improve Hou's goal of increasing bandwidth efficiency in the network when using OFDM transmissions as disclosed in Konschak. The POSITA would have understood that extracting delay profiles from reference symbols using a receiving node that has information about the symbol being transmitted to enable comparison of the transmitted and received signals for channel estimation would have provided the benefits disclosed in Konschak.

114. As such, a POSITA would have extended the RNG-REQ message of Hou's ranging process to include Konschak's reference symbol used for delay properties measurements. Using the reference symbol would have allowed measurement of the delay properties disclosed in Konschak—the extracted channel delay profile resulting from the comparing means, used to determine the delay value—which would in turn have been used to obtain the benefits disclosed in Konschak—efficiency bandwidth utilization by adapting cyclic prefixes to the

measured delay profiles. DISH-1006, [0014]. Because Hou explains that any upstream transmissions can be used for its measurements, a POSITA would have recognized that RNG-REQ messages containing the "reference symbol" disclosed in Konschak would also have been used to take the parameter measurements disclosed in Hou, including the echo delay spread. DISH-1005, 8:44-46, 13:1-15. It would have been within a POSITA's skill level to extend the RNG-REQ message by adding reference symbol used to take the channel delay profile measurements taught by Konschak.

115. It also would have been obvious to utilize the MAC layer to use the probe packet—the RNG-REQ extended to include the reference symbol as disclosed in Konschak—to measure node delay spread on the network. Although Hou does not expressly explain that the MAC layer performs these measurements, it would have been obvious to a POSITA to use the MAC layer in Hou's CMs to implement Hou-Konschak's probe packet to measure the node delay spread.

116. In a DOCSIS-compliant coaxial cable system as described in Hou, there were various "MAC Management Messages" involving the MAC layer used for various parameter adjustments. *E.g.*, DISH-1029, 57-58 (describing the "Time Synchronization" MAC Management Message), 64-66 (describing the RNG-REQ and RNG-RSP MAC Management Messages). Indeed, one requirement of the

ranging protocol in DOCSIS-complaint systems was the use of an "Upstream Channel Descriptor" Mac Management Message. *Id.*, 85.

117. Other prior art references confirm that it was known in the art to utilize the MAC layer to transmit packets specifically containing information for maintaining and/or optimizing upstream communications between a CM and a CMTS. DISH-1008, 3:24-32 ("slot timing information and/or data-type information is transmitted from a MAC to a burst receiver so as to facilitate processing of upstream data packets"); DISH-1009, 2:65-3:1 ("MAC layer 130 is also responsible for sending out polling messages as part of the link protocol between the CMTS and the cable modems that is necessary to maintain a communication between the two"), 4:36-40 ("a method of checking on demand the quality of a communication link between a cable modem and a [CMTS] . . . using MAC layer functionality"); DISH-1017, 2:35-40 ("ranging and power control operation[s]" explained as a "MAC layer power control operation"), 5:4-27 (describing MAC layer as "implement[ing] ranging" and "power control"); DISH-1025, 9:7-16 (describing CMTS using MAC layer to "inform the modem (likely by the ranging protocol if DOCSIS is used)" of a "particular frequency and power" at which to transmit signals), 9:30-32 (explaining a "MAC layer logic block" "control[s] the time slot allocation and ranging procedures required by the DOCSIS standard for transmission of data").

118. Therefore, it would have been obvious to a POSITA to implement Hou-Konschak's functionality for measuring parameters related to upstream transmissions using probe packets in the MAC layer described in Hou. As described above, methodologies using the MAC layer for ranging and other functionality used to measure and optimize the links between a CM and a CMTS were well-known. *See, e.g.*, DISH-1009, 2:65-3:1, 4:36-40; DISH-1017, 2:35-40, 5:4-27; DISH-1010, 6:36-44; DISH-1025, 9:7-16, 9:30-32; DISH-1029, 57-58, 64-66, 85. Because it was known to a POSITA to use the MAC layer for ranging operations and other methods to measure and improve the links between a CM and CMTS, utilizing the MAC layer for the RNG-REQ packet with Konschak's reference symbol would have at least been obvious to try for a POSITA, and would simply have involved combining prior art elements according to known methods to obtain predictable results.

"and the MAC layer optimizing the preamble and cyclic prefix requirements or other parameters in response to the measured node delay spread on the network."

119. Hou discloses the CM adjusting—or "optimizing"—its transmission parameters based on information it receives from the CMTS, which provides the adjustment information by taking performance measurements used "in order to determine appropriate burst profiles to assign" to each CM in the network, including measurements of the echo delay spread. DISH-1005, 13:1-15. Hou also explains

that its "CMTS assigns a burst profile" to each CM "based on the CM performance measurements and the level of robustness needed." *Id.*, 7:21-26. The burst profiles that can be assigned by the CMTS have "key parameters that relate to the robustness of the burst profile" that are adjusted according to the measurements, including the "length of the preamble." *Id.*, 8:23-27. A POSITA would have understood that adjusting the length of the preamble would have been an important factor toward achieving Hou's goal. An unnecessarily long preamble would have increased overhead, and reducing that overhead would have increased bandwidth efficiency as was Hou's goal. *See id.*, 6:5-6.

120. Hou shows three exemplary burst profiles, each of which have varying preamble lengths:

Burst Profile 1: Highly Robust

Burst Profile Attributes	
Modulation	QPSK
Differential Encoding	Off
Preamble Length	180
R-S Error Correction (T bytes)	10
R-S Codeword Information Bytes (k)	80
R-S Shortened Last Codeword	On
Scrambler Seed	142
Maximum Burst Length (minislots)[a]	0
Guard Time	8
Scrambler On/Off	On

Burst Profile 2: Moderately Robust

Burst Profile Attributes	
Modulation	QPSK
Differential Encoding	Off
Preamble Length	100
R-S Error Correction (T bytes)	4
R-S Codeword Information Bytes (k)	100
R-S Shortened Last Codeword	On
Scrambler Seed	142
Maximum Burst Length (minislots)[a]	0

-continued

Burst Profile Attributes	
Guard Time	8
Scrambler On/Off	On

Burst Profile 3: Less Robust

Burst Profile Attributes	
Modulation	16-QAM
Differential Encoding	Off
Preamble Length	64
R-S Error Correction (T bytes)	2
R-S Codeword Information Bytes (k)	120
R-S Shortened Last Codeword	On
Scrambler Seed	142
Maximum Burst Length (minislots)[a]	0
Guard Time	8
Scrambler On/Off	On

Id., 7:36-8:22 (annotated).

121. Each CM updates its transmissions according to the CMTS's assignment of burst profiles. *Id.*, 8:43-65.

122. The ’539 patent discloses a similar methodology for constructing the preamble used in its transmissions. The ’539 patent provides an example of preamble construction that is based on five choices, with one choice selected based on information provided by the MAC layer. DISH-1001, 14:17-34. Hou describes its selection of the proper preamble length for the CMs’ transmissions (through selection of the burst profile, each of which has an associated preamble length) in the same way as the ’539 patent (by choosing one of five preamble lengths). *Id.*; DISH-1005, 8:43-65.

123. Konschak discloses each device adjusting the cyclic prefix in transmissions, in response to measured delay spread. As explained above, VII.B., the use of “cyclic extensions” (or cyclic prefixes) was known in the art as method of combatting the issue of multipath effects causing transmissions to “arrive as delayed symbols or echoes.” DISH-1006, [0002], [0004]. Notably, even the Applicant for the ’539 patent admitted during prosecution that the use of different cyclic extensions or prefixes for different amounts of delay spread was already known in the art. DISH-1002, 357-358.

124. In Konschak’s system, a receiving node uses a “reference symbol” from a transmitting node to calculate a delay value that represents the multipath delay spread effects in the channel between the transmitting and sending nodes (corresponding to the delay spread described in the ’539 patent), and then uses the

delay value to set the length of the cyclic extension to be used in future communications across that channel. DISH-1006, [0002], [0009], [0010], [0011], [0014]. As explained above, a POSITA would have extended the RNG-REQ message to realize ranging procedures as described in Hou to include Konschak's reference symbol, in order to measure the channel characteristics.

125. The cyclic extension can be set in one of two ways: 1) a look-up table based on the delay values, or 2) calculating cyclic extensions "precisely adapted to the delay properties of the transmission channel." *Id.*, [0014], [0015]. Either method would have resulted in a more efficient bandwidth usage when compared to use of a fixed cyclic prefix. And Hou's disclosed adjustments, including to the preamble length, are based on measurements which a POSITA would have understood could be readily realized using transmissions that include reference symbols. Thus, with Konschak's teachings regarding cyclic extension adaptation incorporated in Hou's system, the CMTS would have calculated adjustments for both the preamble and cyclic prefix parameters to be used by the CM in its future transmissions based on the measured channel delay properties.

126. A POSITA would have understood these adjustments to be "optimizations" as described in the '539 patent. The '539 patent explains that echo profile probes are used to "optimize the preamble and Cyclic Prefix ('CP') requirements or other parameters." DISH-1001, 9:62-65. Hou discloses assigning

burst profiles to different CMs depending on their capabilities, resulting in "greater bandwidth efficiency" for the system, with one of the adjusted burst profile parameters being the preamble length. DISH-1005, 5:52-6:6, 7:43-8:22, 10:18-21, 10:28-30, 10:57-11:3, 12:1-10. Similarly, Konschak discloses adapting cyclic extensions to the specific delay properties of a transmission channel, which "significantly reduces" the transmission overhead while still maintaining quality. DISH-1006, Cover.

127. A POSITA would understand from these disclosures that the adjustments to preambles and cyclic extensions taught by Hou and Konschak respectively would have been specific to the particular transmission channel that had been measured, thereby optimizing those parameters for efficient bandwidth use in that channel.

128. It would also have been obvious to a POSITA to use the MAC layer in Hou's CMs to implement transmission parameter optimization. As discussed above, a POSITA would have found it obvious to send the probe packet using the MAC layer. It also would have been obvious to utilize that MAC layer to optimize the communications in a coaxial cable network using information sent by the MAC layer from the CMTS to the CMs. DISH-1008, 3:24-32 ("The error information is used by the MAC to facilitate spectrum management which enhances the data rate and/or reliability of upstream communications."); DISH-1025, 9:7-16 (describing CMTS

using MAC layer to "inform the modem (likely by the ranging protocol if DOCSIS is used)" of a "particular frequency and power" at which to transmit signals). It would have been obvious to a POSITA to use the MAC layer to make the adjustments to the preamble and cyclic prefix to optimal values, as determined by the CMTS using the measured node delay spread.

4. Element 1c

[1c] wherein the transmitter communicates the at least one probe packet.

129. I have been asked to consider whether the Hou-Konschak combination renders obvious limitation [1c]. It is my opinion that Hou-Konschak renders this limitation obvious.

130. It would have been obvious to a POSITA that the transmitter transmits the probe packet. As explained above in relation to [1b], Hou-Konschak's probe packet (the RNG-REQ with the reference symbol as disclosed in Konschak) is transmitted by the CM to the CMTS. VII.D.3. It would have been obvious to a POSITA to utilize the transmitter, used for transmissions between the CM and CMTS, to transmit that probe packet to the CMTS, as it would any other data.

VIII. GROUND 2 – HOU IN VIEW OF KONSCHAK AND DAPPER

A. Dapper (DISH-1007)

131. Dapper is an issued U.S. Patent entitled "Distributed Control in a Communication System." DISH-1007, Cover. Dapper published on April 2, 2002.

Id. Dapper discloses a "communication system" with a "head end terminal" in a distribution network that can "detect[] at least one local transmission characteristic" of downstream "service unit" and generate an "adjustment command as a function of the detected at least one local transmission characteristic." *Id.*, Abstract.

132. Dapper's network may be a "hybrid fiber-coaxial (HFC) distribution network," and uses known OFDM "modem transport architecture[s]." *Id.*, 18:17-20, 18:48-52, 19:9-13. Once the headend terminal generates an adjustment command based on a detected local transmission characteristic, *id.*, 5:11-14, the service unit that receives the command "adjusts the at least one local transmission characteristic." *Id.*, 5: 15-18, 8:61-9:5. The headend terminal transmits the signals used for detection and adjustment functionality across IOC (control) and synchronization channels. *Id.*, 50:26-43.

133. Dapper, which uses OFDM communications, discusses a number of known techniques for improving those communications in the described headend-service unit (i.e., point-to-multipoint) system. As an example, Dapper discloses scrambling payload data "with pseudorandom sequences," which "increase[s] randomness" and "prevents untoward spectral effects" from "variations in channel activity," and also prevent "very high peaks" in the transmissions. *Id.*, 5:19-26; 42:11-19, 42:41-52. Dapper also discloses preferably using Binary Phase-Shift Keying ("BPSK") modulation for the "IOC channels" and "synchronization

channels" used for parameters adjustments, making the system more robust. *Id.*, 42:59-65.

B. Hou-Konschak-Dapper Combination

134. As explained in VII.C above, Hou-Konschak presents a base system that uses a coaxial cable with cable modems, which uses OFDM communications between the CMTS and CM. The CMTS takes measurements of transmissions from the CM to the CMTS (including of the delay spread) and determines the optimal parameters, such as the preamble and cyclic prefix, for the CM's future upstream transmissions, which the CM uses to optimize its transmissions. VII.D.

135. Dapper discloses techniques for improving OFDM communications in a point-to-multipoint modem network, including methods used to increase the robustness of the system and combat known undesirable effects arising in such OFDM communications such as spectral effects and high peaks in transmissions. Section VIII.A.

136. Since the Hou-Konschak system implements OFDM communications into a cable modem point-to-multipoint network, it would have been obvious to a POSITA to look to references such as Dapper to incorporate teachings regarding improving those OFDM communications and their robustness through known techniques such as pseudo-randomization or BPSK modulation. Dapper's techniques would have allowed Hou-Konschak's communications to be more robust

and less susceptible to known problems in the art, such as spectral effects and high peaks in transmissions.

137. Dapper would have been especially compatible with Hou-Konschak because Dapper, like Hou and Konschak, discloses techniques for measuring (or detecting) parameters of transmissions from one node to another across a channel in a network, and adjusting future transmissions across that channel, resulting in improvements to communications in that network. DISH-1005, 7:43-8:22, 8:59-62; DISH-1006, 4:45-55, 5:24-30. DISH-1007, 5:11-18, 8:61-9:5.

138. It would have been obvious to a POSITA that Dapper, which likewise discloses similar techniques for optimization of parameters from channel measurements, also discloses techniques which would have been advantageous in Hou-Konschak's system using OFDM communications. A POSITA would have understood that there were multiple predictable ways to implement OFDM communications in Hou-Konschak's network, and that those communications and their robustness could have been enhanced through the known techniques disclosed in Dapper.

1. Motivation to Combine

139. Hou-Konschak and Dapper are each directed to optimizing communications in point-to-multipoint networks—for example, HFC/coaxial networks. DISH-1005, 5:52-6:6; DISH-1006, [0006]; DISH-1007, 2:37-42. It

would have been obvious to a POSITA that the known techniques disclosed in Dapper applied to systems like Hou-Konschak would have furthered the goal of efficient and robust communications in Hou-Konschak's point-to-multipoint network. A POSITA therefore would have understood that Dapper's teachings directed to optimizing OFDM communications and their robustness in point-to-multipoint HFC/coaxial networks readily apply to the network of the Hou-Konschak combination. DISH-1007, 14:8-12 ("The prevent invention is a hybrid fiber/coax video and telephone communication network . . . including . . . coaxial cable distribution systems.").

140. Additionally, both the Hou-Konschak combination and Dapper optimize communications by measuring characteristics of the channel between a headend/CMTS and nodes/CMs in a point-to-multipoint network and using those measurements to adjust transmission parameters. DISH-1005, 6:37-43, 13:1-3; DISH-1006, [0011]; DISH-1007, 5:11-18, 8:61-9:5. Given these similarities in the references' methodologies, a POSITA would have understood that Hou-Konschak's system using OFDM communications would have encountered the same problems known in the art that are addressed by Dapper, and would therefore have been motivated to use Dapper's disclosed techniques to address those problems.

141. A POSITA, for example, would have understood that signals used for adjustment of transmission parameters should be robust. DISH-1007, 42:59-65;

37:38-43. Indeed, Hou similarly teaches assigning different burst profiles to different CMs depending on their robustness levels. DISH-1005, 6:33-35. It also would have been obvious to a POSITA that using pseudorandom sequences to randomize the transmitted signals used for parameter adjustments would have prevented unwanted effects in the signals transmitted in Hou-Konschak's system, increasing their robustness. DISH-1007, 42:11-19, 42:41-52.

2. Reasonable Expectation of Success

142. A POSITA would have had a reasonable expectation of success in combining the Hou-Konschak combination with Dapper's teachings. This is so at least because Hou, Konschak, and Dapper are all analogous art to the '539 patent.

143. I explain above that Hou and Konschak are analogous art to the '539 patent. *See* Section VII.C.3.

144. Like Hou and Konschak, Dapper is analogous art to the '539 patent. Dapper, like Konschak, is reasonably pertinent to the problems that the '539 patent inventors faced and sought to solve. Dapper confronted the issue of adapting transmission parameters in a network based on measured parameters of particular channels in that network—specifically, adjusting transmission parameters such as frequency based on channel delay information), similar to the '539 patent's inventors. DISH-1001, 9:56-65 ("Echo Profile probes" "measure node delay spread" in order to "optimize the preamble and cyclic prefix ('CP') requirements or

other parameters), 10:30-32 (similar); DISH-1007, 9:6-23 (explaining that certain transmission parameters, including the frequency, phase, and timing of transmissions, are adjusted based on a calculated round-trip delay).

145. Additionally, it would have been obvious to a POSITA considering a point-to-multipoint OFDM system such as Hou-Konschak to apply teachings from analogous references like Dapper, another reference which teaches improvements to OFDM systems in point-to-multipoint networks using channel measurements to adjust parameters.

146. As discussed above, VII.C, the Hou-Konschak combination would have utilized Konschak's OFDM communications in Hou's point-to-multipoint cable modem network. A POSITA would have been able to apply the teachings of Dapper, which is directed to improvements in OFDM transmissions in point-to-multipoint networks, to improve the OFDM transmissions in Hou-Konschak's system by solving known problems arising in such networks.

147. For example, a POSITA would have understood that, as taught by Dapper, scrambling payload data with pseudorandom sequences would prevent spectral effects from "variations in channel activity" or "highly repetitive data patterns." DISH-1007, 5:19-25. A POSITA would also have understood that using BPSK signals for control or synchronization signals as disclosed in Dapper would have been utilized in Hou-Konschak's RNG-REQ signals, similarly used for

synchronization. *Id.*, 37:34-43, 42:63-65. A POSITA also would have recognized that scrambling the payload data and utilizing BPSK modulation would improve Hou-Konschak's OFDM transmissions in the same known way, and implementing such a solution would have been obvious to try.

148. In other words, the addition of Dapper to Hou-Konschak represents a combination of known elements in OFDM communication systems, each performing the functions it had been known to perform to produce the predictable result of improved and more robust communications in Hou-Konschak's point-to-multipoint network. A POSITA thus would have reasonably expected a successful outcome from combining Dapper's OFDM improvement teachings in Hou-Konschak's point-to-multipoint OFDM communication system.

C. Claim 2

[2] The modem of claim 1 wherein the one probe packet has a payload, and the payload includes pseudo random time domain samples generated by a pseudo random sequence.

149. I have been asked to consider whether the Hou-Konschak-Dapper combination renders obvious claim [2]. It is my opinion that Hou-Konschak-Dapper renders this claim obvious.

150. As I explain above, a POSITA would have found it obvious to use the MAC layer in Hou's CMs to implement the claimed "probe packet." *See* Section VII.D.3 above.

151. The ’539 patent explains that its packets are scrambled with a “Pseudorandom Noise (PN23) sequence,” which is used to “improve[] the spectral content of the transmission” and “reduces any data related DC biases.” DISH-1001, 12:20-35. The data is then “scrambled again by a PN15 sequence,” and the result is then “converted time domain samples by computing an Inverse Fast Fourier Transform (IFFT).” *Id.*, 13:48-14:10.

152. Such pseudorandom scrambling sequences were known in the art, and one such sequence is described in Dapper. Dapper discloses scrambling payload channel data with “pseudorandom sequences” to “produce a more balanced multicarrier spectrum.” DISH-1007, 5:22-25. Dapper explains that both payload data and control data enter a “scrambler” to randomize the data, and that the randomized data is then mapped to symbols, which are then mapped “into the time domain through the inverse FFT,” with the final result being “time domain samples.” *Id.*, 42:11-15, 42:53-43:8, 43:66-44:9. As such, in Dapper, both the “payload data” and control data are “transformed into time domain samples by the inverse FFT.” *Id.*, 44:9-12.

153. Notably, scrambling data prior to transmission over a network is generally desirable to avoid long strings of consecutive 0s or 1s in such transmissions, the existence of which can be detrimental to communication

robustness. For example, long strings of consecutive 0s or 1s can increase the odds of synchronization errors.

154. Applying Dapper's teachings to Hou-Konschak's system, it would have been known and obvious to apply the pseudo random sequence to the payload data in the RNG-REQ messages (i.e., the reference symbol) to generate pseudo random time domain samples, thereby obtaining the same benefits of such scrambling as disclosed in Dapper.

155. Scrambling the payload reference symbol data in the RNG-REQ message would result in pseudo random time domain samples generated by a pseudo random sequence for the entire payload. As such, Hou-Konschak-Dapper would have rendered obvious this claim limitation.

D. Claim 3

[3] The modem of claim 2 wherein the payload is transmitted with a binary phase shift keying (BPSK) modulated single carrier at the center frequency of the channel.

156. I have been asked to consider whether the Hou-Konschak-Dapper combination renders obvious claim [3]. It is my opinion that Hou-Konschak-Dapper renders this claim obvious.

157. Dapper explains that "BPSK" modulation is "preferably used for the upstream and downstream [control] channels and the synchronization channels." DISH-1007, 42:59-65. Dapper also explains that "synchronization bands," which

are used to detect the parameters used for transmissions between the headend and service units, have a "single synchronization carrier or tone" that is "BPSK modulated" and "may be located in the center of the receive band" (i.e., the center frequency of the channel). *Id.*, 49:18-32; DISH-1003, ¶¶ZZZ.

158. The center frequency of the channel claimed in the '539 patent is synonymous with the center of the receive band described in Dapper. A band is a term for a range of frequency, and the center of the receive band would have been the center frequency of the band.

159. A POSITA would have understood that BPSK would have been the most robust modulation type. *E.g.*, DISH-1007, 42:60-65 ("BPSK encoding is preferred for the IOC control data so as to provide robustness in the system . . . ."). This is because higher modulation types such as QPSK or 16-QAM would have exhibited greater sensitivity to noise. *E.g.*, DISH-1034, 5:41-56 (explaining that BPSK must be used in noisy environments because it is more difficult to receive 8PSK or QPSK modulated signals), 5:57-62 (explaining lowering the modulation type as difficulties are encountered with higher modulation types).

160. Generally, the frequency response of a transmission spreads evenly around the carrier frequency. As a result, to avoid interference with signals in adjacent frequency bands as much as possible, it is desirable to have the signal in the center frequency of the band. *See*, *e.g.*, DISH-1032, 20 ("at the center frequency of

each channel there will be no crosstalk from other channels"); DISH-1033, 24:46-52 ("The impact of the adjacent channel bleed-over can be mitigated by concentrating the boost sub-channels . . . toward the center of the dedicated boost band"), Fig. 27 ("Uses center of a channel for boost mode to avoid the roll off of adjacent channels"). As such, although Dapper describes the center frequency carrier in a downstream transmission context, DISH-1007, 49:23-26, it would have been obvious to a POSITA to use the center frequency for upstream transmissions, as well.

161. It would therefore have been obvious to a POSITA to have the signal BPSK modulated in a single carrier at the center frequency of the channel. Transmitting using BPSK modulation would have maximized the robustness of the signal, and transmitting in a carrier at the channel's center frequency would have minimized interference with transmissions on adjacent frequency bands.

E. Claim 4

[4] The modem of claim 3 wherein a length of the one probe packet is provided by the MAC layer.

162. I have been asked to consider whether the Hou-Konschak-Dapper combination renders obvious claim [4]. It is my opinion that Hou-Konschak-Dapper renders this claim obvious.

163. As discussed above, VII.D.3, it would have been obvious to a POSITA to implement the claimed probe packet in Hou's MAC layer to measure the delay spread, and also to optimize the preamble and cyclic prefix requirements or other parameters in response to that delay spread.

164. It also would have been obvious to a POSITA to have the MAC layer provide the length of the probe packet. For example, Hou describes a DOCSIS-compliant network, with cable modems operating under the DOCSIS protocol. *See*, *e.g.*, DISH-1005, 4:7-5:51, 6:30-45, 7:25-34. DOCSIS-compliant systems utilized MAC Headers that had certain fields used for communications in those systems, including a "LEN(SID)" field. DISH-1029, 45 (describing "MAC Header Format"). Figure 6-3 from the DOCSIS 1.0 specification, reproduced below with annotation, illustrates the LEN(SID) field in the typical DOCSIS MAC Header.

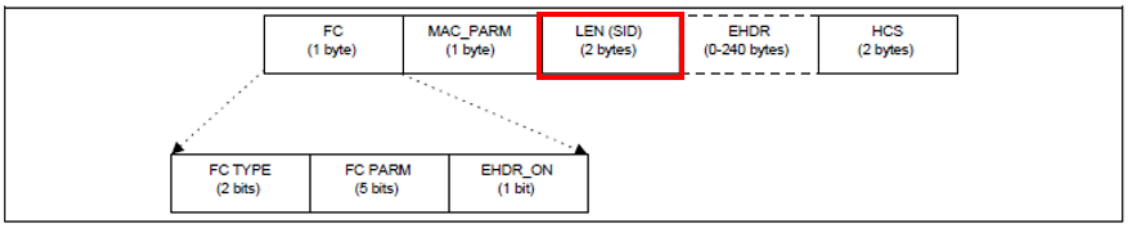

Figure 6-3. MAC Header Format

DISH-1029, Fig. 6-3.

165. As the DOCSIS specification explains the LEN(SID) field contains the "length of the MAC frame," which is the "sum of the number of bytes in the extended header" and the "number of bytes following the HCS field." *Id.*, 46.

166. The MAC header, including the LEN(SID), is passed down to the "PMD," or the physical layer used for the cable network transmissions, which then "transport[s] the MAC frames . . . for upstream channels." *Id.*, 11, 44. This claim therefore recites what was already generally known in the art—the MAC layer providing the length of a packet for transmission over a cable network.

167. In the specific case of a RNG-REQ message, the DOCSIS specification explains that the LEN(SID) field is used as the Service ID instead of the length. *Id.*, 46 (Table 6-1, stating LEN(SID) field is used for Service ID in a REQ header). However, the RNG-REQ message used in Hou-Konschak would have been atypical because, as explained above with respect with claim 1, it would have included the reference symbol disclosed in Konschak as the payload of the packet. Adding the reference symbol to the RNG-REQ packet would necessitate using the LEN(SID) field as the length of the field because the format of the packet would not have followed a typical RNG-REQ packet. In a typical RNG-REQ message, the LEN field would not have been needed because the RNG-REQ message would have a fixed length, such that identifying the type of message as an RNG-REQ message would have been sufficient to determine the length of the packet. *E.g.*, DISH-1029, 65-65 (showing the fixed-length fields of a RNG-REQ message). Accordingly, when Konschak's reference symbol is added to the RNG-REQ message, the length would change, and a value in the LEN field would be needed to specify the length

of the new packet (with the reference symbol payload), which could potentially have varied. As such, it would have been obvious to modify the LEN(SID) field to include the length of the RNG-REQ packet including the reference symbol of Konschak.

F. Claim 5

[5] The modem of claim 1 wherein the one probe packet has a payload, and the payload consists of pseudo random time domain samples generated by a pseudo random sequence.

168. I have been asked to consider whether the Hou-Konschak-Dapper combination renders obvious claim [5]. It is my opinion that Hou-Konschak-Dapper renders this claim obvious.

169. As explained above, VIII.C, Hou-Konschak-Dapper renders probe packets with payloads using a pseudo-random sequence to generate time domain samples obvious. In particular, in the Hou-Konschak-Dapper system, the reference symbol used as the payload of the extended RNG-REQ packet would have gone through the pseudo random sequence to generate pseudo random time domain samples. It would have been obvious to a POSITA that the pseudo-random samples would make up a portion of (as in claim 2) or the entirety of (as in claim 5) such payloads. As explained above, applying Dapper to Hou-Konschak's system would have resulted in the entire payload (in the Hou-Konschak-Dapper system, the reference symbol taught by Konschak) being made up of pseudo random time

domain samples generated by a pseudo random sequence, which would satisfy both limitations.

G. Claim 6

[6] The modem of claim 5 wherein the payload is transmitted with a binary phase shift keying (BPSK) modulated single carrier at the center frequency of the channel.

170. I have been asked to consider whether the Hou-Konschak-Dapper combination renders obvious claim [6]. It is my opinion that Hou-Konschak-Dapper renders this claim obvious, as explained above with respect to claim 3.[3] VIII.D.

H. Claim 7

[7] The modem of claim 6 wherein a length of the one probe packet is provided by the MAC layer.

171. I have been asked to consider whether the Hou-Konschak-Dapper combination renders obvious claim [7]. It is my opinion that Hou-Konschak-Dapper renders this claim obvious, as explained above with respect to claim 4.[4] VIII.E.

IX. RESERVATIONS

---

[3] This claim depends upon claim 5, which recites that "the payload ***consists of*** pseudo random time domain samples . . . ." Claim 3 depends upon claim 2, which recites that "the payload ***includes*** pseudo random time domain samples . . . ." This difference does not impact my analysis for claim 6.

[4] This claim depends upon claim 5, which recites that "the payload ***consists of*** pseudo random time domain samples . . . ." Claim 3 depends upon claim 2, which recites that "the payload ***includes*** pseudo random time domain samples . . . ." This difference does not impact my analysis for claim 7.

172. If I am called to testify at the hearing, I may rely on demonstrative exhibits that illustrate and help explain the bases of my opinions (including those presented above).

173. Other than as provided or referenced in this declaration, I have not yet prepared any exhibits to support my opinions.

174. If new information becomes available, or new arguments are presented, I may revise or supplement my analysis.

X. CONCLUSION

175. For the reasons discussed above, in my opinion a person of ordinary skill in the art would have found claim 1 of the ’539 patent obvious over the references presented in Ground 1.

176. Likewise, for the reasons discussed above, in my opinion a person of ordinary skill in the art would have found claims 2, 3, 4, 5, 6, and 7 of the ’539 patent obvious over the references presented in Ground 2.

177. Likewise, for the reasons discussed above, in my opinion a person of ordinary skill in the art would have found claims 2, 3, 4, 5, 6, and 7 of the ’539 patent obvious over the references presented in Ground 2.

178. in my opinion a person of ordinary skill in the art would have found claim 1 of the ’539 patent obvious over the references presented in Ground 4.

179. I declare that all statements made herein of my knowledge are true and that all statements made on information and belief are believed to be true. I also declare that these statements were made with the knowledge that willful false statements and the like so made are punishable by fine or imprisonment, or both, under 18 U.S.C. § 1001. I declare under the penalty of perjury under the laws of the United States of America that the foregoing is true and correct.

Date: 2/5/2024

ROCH A. GUERIN