United States Patent [19]

Eichelberger et al.

[11] **4,290,052**

[45] **Sep. 15, 1981**

[54] **CAPACITIVE TOUCH ENTRY APPARATUS HAVING HIGH DEGREE OF PERSONAL SAFETY**

[75] Inventors: **Charles W. Eichelberger**, Schenectady; **Robert J. Wojnarowski**, Clifton Park, both of N.Y.

[73] Assignee: **General Electric Company**, Schenectady, N.Y.

[21] Appl. No.: **88,287**

[22] Filed: **Oct. 26, 1979**

[51] **Int. Cl.**[3] **G06F 3/02**; H01G 7/00

[52] **U.S. Cl.** ..... **340/365 C**; 200/DIG. 1; 361/280; 361/330

[58] **Field of Search** ..... 340/365 R, 365 C, 365 S; 200/DIG. 1, 52 R; 400/479.1; 361/288, 280, 292, 300, 330; 364/705; 178/17 C, 18; 179/90 K; 235/145 R; 307/116

[56] **References Cited**

U.S. PATENT DOCUMENTS

3,757,322	9/1973	Barkan et al.	340/365 C
3,921,167	11/1975	Fox	340/365 C
3,951,250	4/1976	Pointon et al.	400/479.1
3,974,332	8/1976	Abe et al.	340/365 C
4,055,755	10/1977	Nakamura et al.	340/365 C
4,123,631	10/1978	Lewis	340/365 C

FOREIGN PATENT DOCUMENTS

0814077	5/1969	Canada	340/365 C

Primary Examiner—James J. Groody

Attorney, Agent, or Firm—Geoffrey H. Krauss; James C. Davis; Marvin Snyder

[57] **ABSTRACT**

A capacitive touch entry structure utilizes an array of at least one capacitive touch sensor fabricated upon a double-sided printed circuit board adhesively mounted upon a surface of a transparent insulative substrate. The substrate has sufficient thickness to safely insulate user personnel, contacting the substrate surface furthest from an electrode of the capacitive touch sensor, from electrical potentials present adjacent to the panel surface upon which the capacitive touch sensor is fastened. Touch sensor circuitry and interconnections may be advantageously fabricated directly upon the pair of conductive planes, sandwiching an insulative layer therebetween, to form the printed circuit portion of the structure. A conductive guard may also be disposed adjacent to the substrate to shield at least the lead portions of the touch sensors from capacitive effects.

8 Claims, 6 Drawing Figures

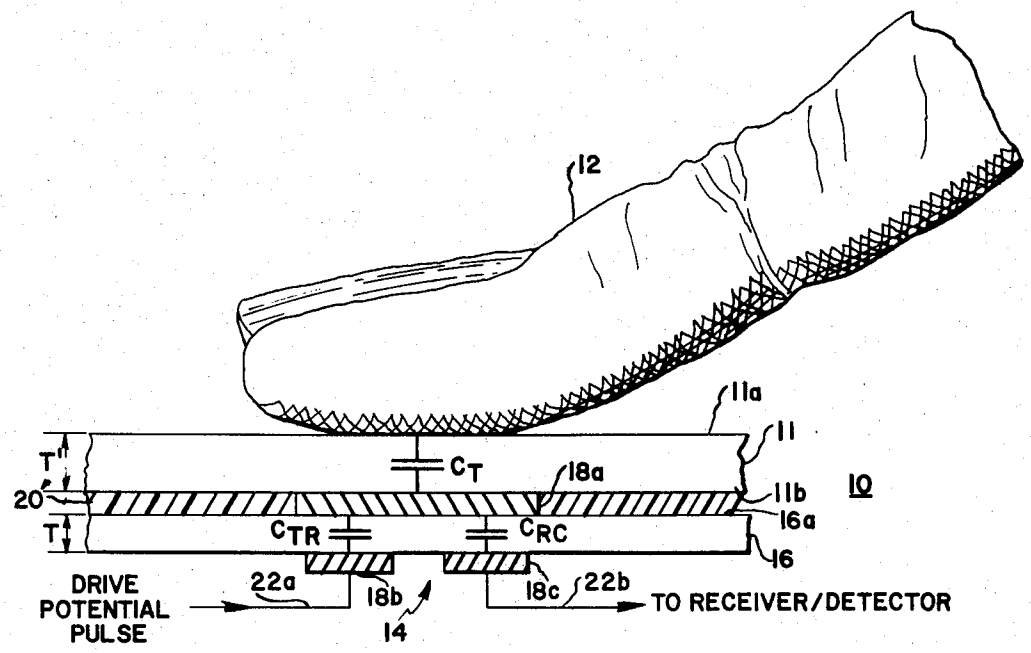

Luxottica Ex. 1010
IPR Petition USP 8,801,174

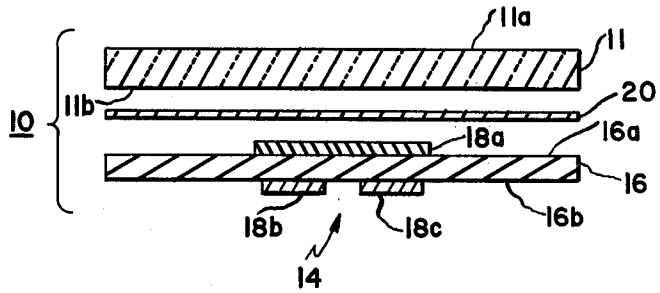

Fig. 1a

Fig. 1b

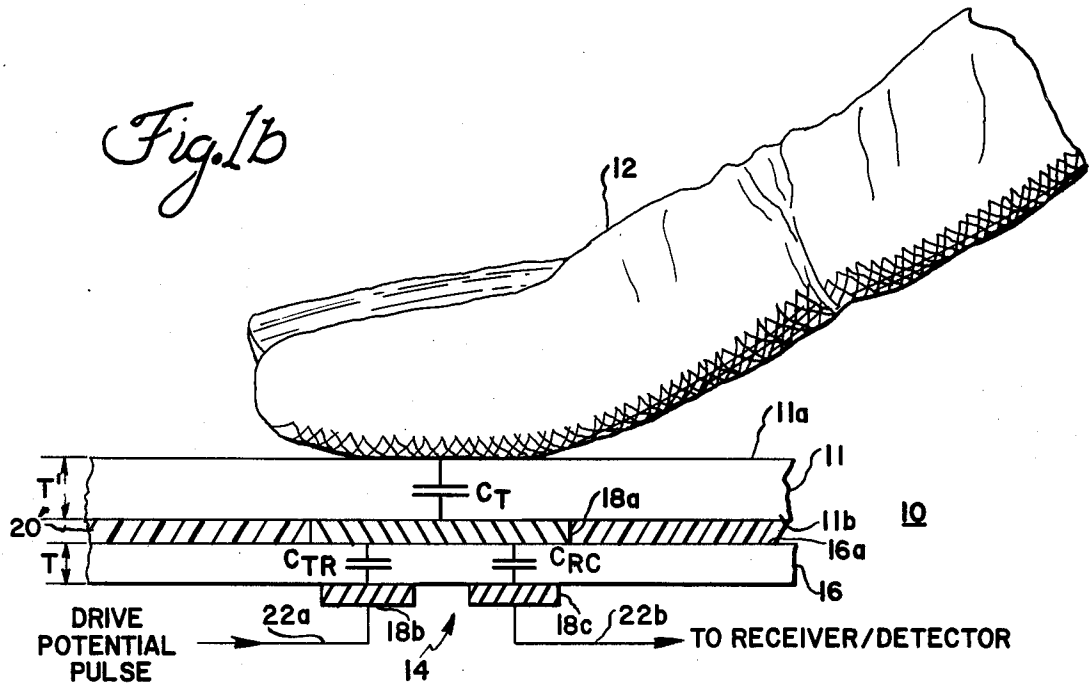

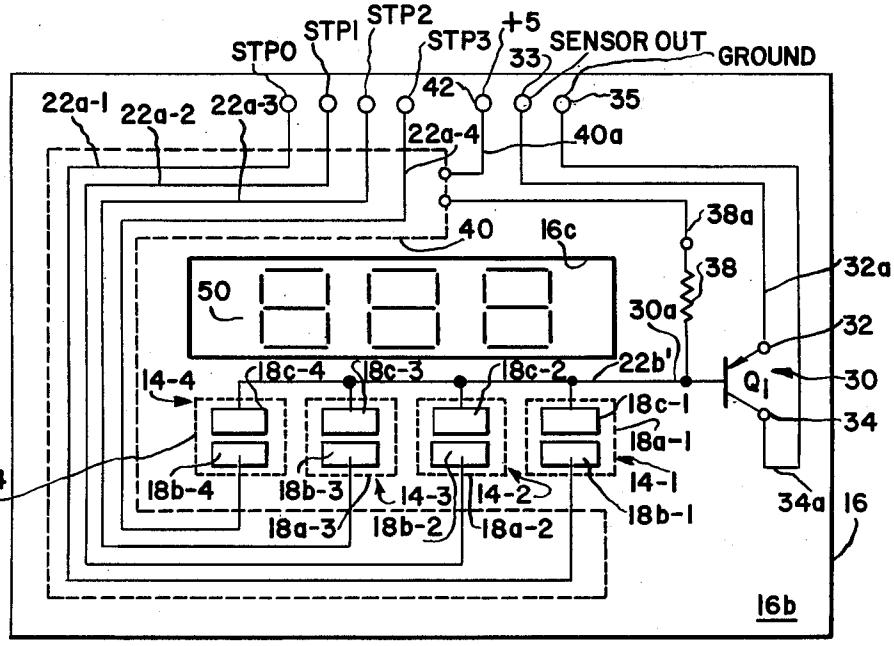

Fig. 2

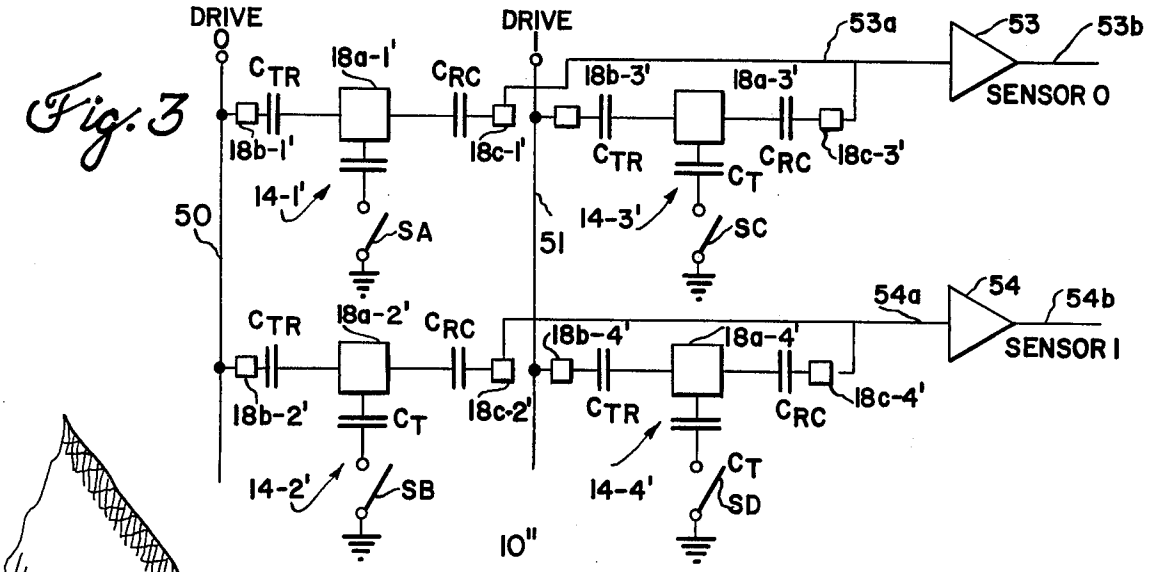

Fig. 3

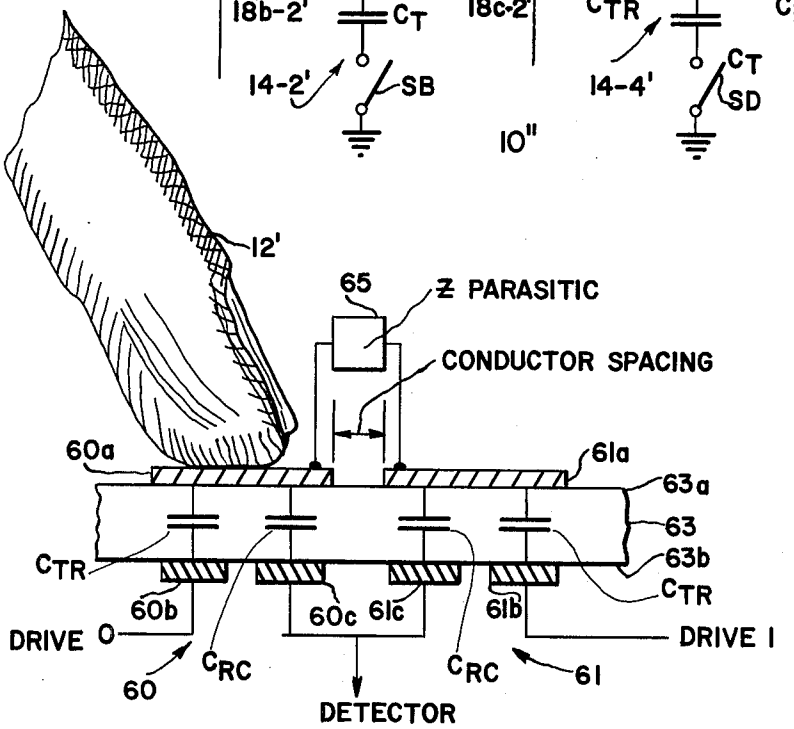

Fig. 4a
(PRIOR ART)

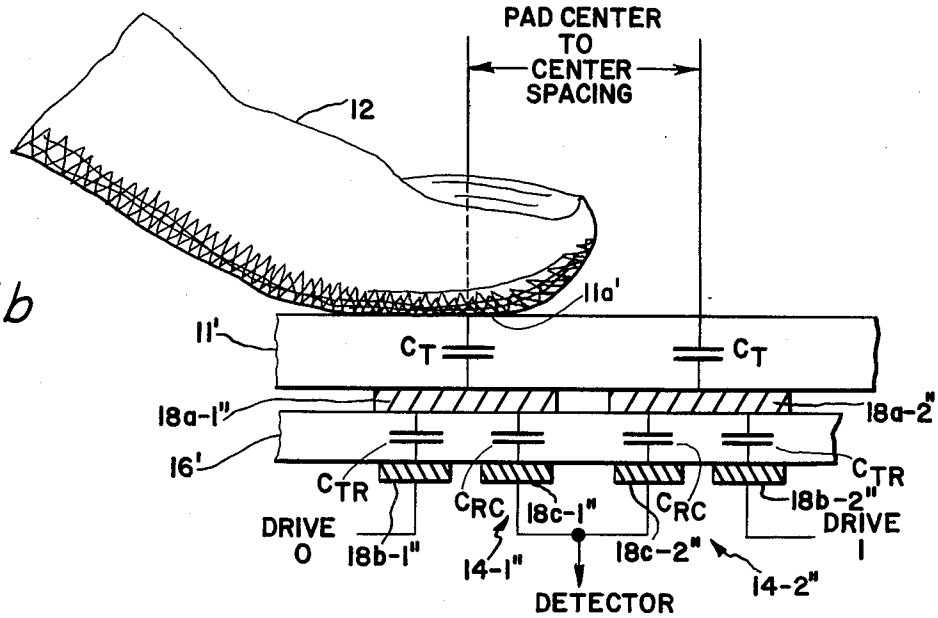

Fig. 4b

CAPACITIVE TOUCH ENTRY APPARATUS HAVING HIGH DEGREE OF PERSONAL SAFETY

BACKGROUND OF THE INVENTION

The present invention relates to capacitive touch entry structures and more particularly to a structure allowing capacitive touch entry of data while providing a high degree of safety to user personnel.

It is known to provide arrays of at least one conductive touch pad sensor for controlling functions of an apparatus by contact of a portion of the user's personnel, such as a user's fingertip, to a touch contact area. Conventional touch entry systems utilize a matrix of electrodes overlayed by an insulating film, such as a plastic membrane and the like, to allow the electrode to be pressed against contacts by user's finger, while preventing direct contact with the electrode. The insulative plastic membrane allows a low impedance path between a pair of contacts to be made, and also prevents application of touch contact potentials to the user's finger, but is of insufficient insulative thickness to prevent application of higher potentials if such higher potentials appear on the touch contact due to improper generations of the apparatus to be controlled by the touch sensors. This form of touch entry structure exhibits several difficiencies, including: a plastic appearance; a high probability of damage during cleaning (which may allow touch pad potentials to be received by user personnel); and low possibility of integration with display apparatus due to the insufficient clarity of a plastic membrane for allowing the display information to appear in areas directly adjacent to the capacitive touch pad area.

A suggested solution to the problem is to fabricate capacitive touch sensors having touch pad electrodes fabricated upon a glass substrate. The use of a glass substrate generally requires some form of conductive elements upon the front surface of the substrate, which is that surface directly contacted by the user's finger. Thus, not only is the user receiving some portion of the voltage potential utilized to operate the sensor (which is undesirable from a safety viewpoint) but this form of capacitive touch pad also requires the extremely expensive processing step associated with depositing a front substrate conductor and is also incompatible with the processes utilized for tempering the glass substrate for safety reasons. Additionally, the front electrode must be of a transparent conductive material and tends to show fingerprints more readily than a glass substrate having no front substrate conductor; the presence of a front substrate conductive film allows that film to be interrupted, as by the presence of scratches and the like, whereby the capacitive touch sensor utilizing that electrode will fail.

Accordingly, it is desirable to provide a capacitive touch entry panel structure having capacitive touch entry sensors so positioned as to provide a high degree of user safety and sensor reliability, with low manufacturing costs therefor.

BRIEF SUMMARY OF THE INVENTION

In accordance with the invention, a capacitor touch entry panel having a high degree of user personnel safety is fabricated by positioning an array of capacitive touch sensors upon the opposite surface of a high-dielectric-constant member having a remaining surface contactable by user personnel for individually activating the capacitive touch sensors. The sensor array is formed of an insulative layer supporting patterned conductors upon the opposite sides thereof, with the conductor patterns forming the electrodes of the various sensors of the array. That conductor-bearing surface of the insulative sheet, having the "touchable" electrodes of the sensors, is fastened to the insulative substrate surface furthest from the contactable surface. Electrical components, of passive or active nature, and interconnection leads may be fabricated as an integral part of the conductor patterns on either or both surfaces of the insulative layer, to reduce the number of contacts required to be made to the capacitive touch entry panel.

In one presently preferred embodiment, the insulative layer and its pair of patterned conductive planes is fabricated of a sheet of double-sided printed circuit board. The printed circuit board contains an array of touch pads, each having a "touch" electrode formed in the conductor material on a first side thereof and having transmitter and receiver electrodes in registration therewith and fabricated upon the opposite side of the printed circuit board. The conductive sheet surface of the printed circuit board having the "touch" electrodes, is adhesively fastened to the surface of the transparent, insulative substrate (formed of glass and the like) opposite that surface contactable by user personnel. The substrate may be formed of tempered glass of a sufficient thickness to meet user personnel safety requirements, with the high dielectric constant of the substrate material causing a finger "touch" to appear to the "touch" electrode as being closer, by a factor equal to the dielectric constant of the substrate material, than it actually is. In this manner, conductors upon the front surface, or within the volume, of the protective insulative substrate are not required and touch pad intercoupling is reduced as there are no closely spaced touch pad edges which can be coupled together by contamination of the touchable front surface of the insulative substrate.

Accordingly, it is an object of the present invention to provide a capacitive touch entry panel having an array of capacitive touch sensors isolated from user personnel contact.

This and other objects of the present invention will become apparent upon consideration of the following detailed description, when taken in conjunction with the drawings.

BRIEF DESCRIPTION OF THE DRAWINGS

FIG. **1***a* is an exploded sideview of a capacitive touch entry panel in accordance with the principles of the present invention;

FIG. **1***b* is a sideview of a portion of a capacitive touch entry panel, illustrating the manner of operation thereof;

FIG. **2** is a plan view of a double-conductor-bearing insulative layer utilized in one example of a capacitive touch entry panel, and having display elements associated therewith;

FIG. **3** is a schematic diagram illustrating one possible embodiment of a circuit for driving a matrix of capacitive touch sensors forming a portion of the capacitor touch entry panel of the present invention; and

FIGS. **4***a* and **4***b* are sideviews of portions of a prior art capacitive touch sensor structure and of the touch entry panel of the present invention, respectively, illus-

trating the relative responses to contamination and the like deleterious effects.

DETAILED DESCRIPTION OF THE PRESENT INVENTION

Referring now to FIG. **1***a*, a capacitive touch entry panel **10** comprises a substrate, or panel, **11** of a transparent insulative material, such as glass and the like. A first surface **11***a* of the panel is contactable by a portion, such as finger **12** (FIG. **1***b*), of user personnel. An array of at least one capacitive touch sensor **14** is fabricated upon an insulative material layer **16**. The various electrodes **18** of the capacitive sensor are deposited upon the surfaces **16***a* and **16***b* of layer **16**.

In the presently preferred embodiment, each sensor **14** includes a somewhat rectangular-shaped "touch" electrode **18***a*, fabricated upon that surface **16***a* of the insulative layer nearest to the surface **11***b* of the panel, which surface **11***b* is not subject to contact by user personnel digit **12**. A pair of spaced-apart transmitter and receiver electrodes **18***b* and **18***c*, respectively, are fabricated upon the insulative layer surface **16***b* furthest from the panel and so registered with "touch" electrode **18***a* as to be within an area bounded by the periphery of electrode **18***a*. The insulative layer **16**, bearing conductive electrodes **18** upon both surfaces **16***a* and **16***b* thereof, is fastened to rear surface **11***b* of the substrate by means of a suitable adhesive strip **20** and the like. The insulative adhesive strip **20** may be replaced by other fastening means, which may be characterized by the dual qualities of fastening the electrode-bearing insulative layer **16** to the panel rear surface and providing an insulative barrier between "touch" electrodes **18***a* of adjacent sensors. It should be understood that a plurality of sensors **14** may each be fabricated of at least two electrodes, positioned upon either or both surfaces of insulative layer **16**, and may extend in an array leftwardly and rightwardly, and into and out of the plane of the drawing, or may be otherwise arranged about the two-dimensional plane of insulative layer **16**, and substantially parallel to the rear surface of insulative substrate **11**.

Advantageously, sensors **14** are fabricated upon insulative layer **16** by utilization of printed circuit board (PC board) of the double-clad variety, having a layer of insulative material sandwiched between two planes of conductive material; the desired sensor pattern is formed upon each of the conductor planes and the unwanted conductor of each plane is subsequently etched away. This has the further advantage that interconnection lines between electrodes of various sensors may be interconnected by conductive leads fabricated as a portion of the PC board, as is well known to the art. A further advantage allows electronic components, of either the passive or active types, to be installed directly upon the appropriate portions of the double-sided printed circuit board, prior to cementing the printed circuit board to the rear of panel substrate **11**.

As shown in FIG. **1***b*, in operation, the capacitive touch entry panel **10** is provided with a driving signal to a lead **22***a* connected to transmitter electrode **18***b*. The drive potential, typically a pulse voltage, is coupled from a source (not shown) across insulative layer **16** from transmitter electrode **18***b* to touch electrode **18***a*; the coupling capacitance C_{TR} is a function of the area of transmitter electrode **18***b* and the thickness T and dielectric constant of the insulative layer **16**. In the "no-touch" condition (with user personnel digit **12** removed) the signal coupled, at a "no-touch" amplitude, to touch electrode **18***a* is coupled, via capacitance C_{RC}, to receiver electrode **18***c* and thence via a lead **22***b* to appropriate detecting circuitry (not shown).

When user personnel digit **12** is in contact with front surface **11***a* of the panel, a touch capacitance C_T is formed between touch electrode **18***a* and ground potential. This is the capacitance-to-ground of the user's body, in series with the capacitance of the area of that portion insulative panel **11** contacted. As the thickness T' of panel **11** may be relatively large, typically on the order of $\frac{1}{8}$" to meet various safety requirements, the high dielectric constant of a glass panel, with typical dielectric constant of about 6 to about 8, makes the capacitance-to-ground of digit **12** appear to be closer to panel rear surface **11***b*, and touch electrode **18***a*, by a factor equal to the dielectric constant. Thus, a $\frac{1}{8}$th" thick panel of glass having an effective dielectric constant of 8 appears to provide an equivalent air gap of about 1/64th of an inch between digit **12** and touch electrode **18***a*. The drive potential pulse characteristics and the areas and spacings of electrodes **18***a*, **18***b* and **18***c* are coordinately preselected such that the presence of digit **12** at the equivalent air gap distance from touch electrode **18***a* provides the touch capacitance C_T to ground. The touch sensor **14** now appears to be a T-type capacitive attenuator and the peak amplitude of a signal provided at receiver electrode **18***c* to the detector (not shown) will decrease with respect to the peak amplitude, at receiver electrode **18***c*, in the no-touch condition. This reduction in amplitude indicates the touch condition and may be suitably processed, by means known to the art, to effect control of other apparatus associated with the particular touch sensor **14**.

The capacitive touch entry panel is particularly advantageous in that insulative panel **11** is fastened to the sensor-carrying printed circuit board in a final fabrication step, whereby the glass material of panel **11** may be separately tempered without subjecting the other portions of the panel to the tempering process. The use of relatively thick and tempered glass is required by various safety agency rules to not only reduce the possibility of panel breakage, but also to provide sufficient insulative thickness to protect user personnel from potentially hazardous operating potentials carried by wires behind the panel.

In conjunction with FIG. **1***a*, it should be noted that fastening means, such as a film **20'** of cement, adhesive and the like, can be placed (FIG. **1***b*) between those portions of insulative layer surface **16***a* devoid of conductive material and portions of panel rear surface **11***b* in registration therewith, whereby the forward surface of touch electrode **11***a* abuts directly against panel rear surface **11***b*, with no adhesive means intervening therebetween.

Referring now to FIG. **2**, an insulative layer **16'** of one exemplary embodiment of our capacitance touch entry panel is shown, as viewed from the rear surface **16***b* thereof. Positioned upon the rear surface are the transmitter electrodes **18***b*-**1** through **18***b*-**4** and the receiver electrodes **18***c*-**1** through **18***c*-**4** of a set of four capacitive touch sensors **14**-**1** through **14**-**4**. Shown in broken line are the touch electrodes **18***a*-**1** through **18**-**4**, fabricated upon the opposite surface of the dielectric layer. It should be understood that the plurality of capacitive touch sensors need not be arranged in an array elongated only a single direction, as shown for purposes of illustration.

Each of transmitter electrodes **18b-1** through **18b-4** is connected to an associated sensor transmitter pulse input terminal STP0 through STP3 by a respective one of leads **22a-1** through **22a-4**, fabricated upon near surface **16b**. All of receiver electrodes **18c-1** through **18-4** are coupled in parallel by a common lead **22b'** to an input **30a** of a sensor array detector **30**. The detector includes a transistor Q_1 illustratively having its base electrode connected to detector input **30a**, its emitter electrode **32** connected by a lead **32a** to a sensor output terminal **33**, and a collector electrode **34** connected via a lead **34a** to a ground terminal **35**. A base resistor **38** is connected between the base electrode of transistor Q_1 and a lead **38a**. The lead **38a** connects to a conductive guard electrode **40** which is in registration with all of sensor transmitter leads **22a-1** through **22a-4** and is also connected by a lead **40a** to an operating potential input **42**. Guard electrode **40** is so positioned as to shield leads **22a-1** through **22a-4** from capacitive effects when the surface of the capacitive touch entry panel is touched by user personnel digits, in the areas in registration with the leads, thus reducing the possibility of false touch indications. It should be noted that all of leads **22a-1** through **22a-4**, **22b'**, **32a**, **34a**, **38a** and **40a**, as well as guard electrode **40** and the transmitter and receiver electrodes are all fabricated by etching a conductive planar member fabricated on rear surface **16b** of the insulative layer. Resistor **38** may be a thin or thick film resistor subsequently deposited between an end of lead **38a** and lead **22b'**, or may be a discrete resistance component positioned against insulative layer rear surface **16b** and fastened between leads **38a** and **22b'**, by soldering, welding and the like. Similarly, transistor Q1 may be a discrete, packaged transistor having its electrodes fastened to leads **22b'**, **32a** and **34a** after the transistor is positioned against the insulative layer rear surface.

Insulative layer **16** contains a cutout **16c** for allowing displays **50**, positioned behind the insulative layer rear surface **16b**, to be viewable through the transparent panel **11**. Advantageously, the information viewable on displays **50** is related to data entered via the capacitive touch sensors **14-1** through **14-4** of the capacitive touch entry panel **10'**.

Referring now to FIG. **3**, a panel **10''** having a square array of four capacitive touch sensors **14-1'** through **14-4'** thereon is illustrated. The transmitter electrodes **18b-1'** and **18b-2'** of the first and second sensors are connected to a first drive line **50**, while the transmitter electrodes **18b-3'** and **18b-4'**, respectively, of sensors **14-3'** and **14-4'** are connected in parallel to a second drive line **51**. First and second drive lines **50** and **51** are alternately driven with pulsed drive signals DRIVE **0** and DRIVE **1**, respectively. The receiver electrodes of sensors similarly positioned along each of the first and second drive lines are connected in parallel to the input of a first detector **53**, e.g. receiver electrodes **18c-1'** and **18c-3'** of sensors **14-1'** and **14-3'**, respectively, positioned along one row of the square matrix, are connected to the input **53a** of sensor **53**. Similarly, the receiver electrodes of the sensors along a second row of the sensor array or matrix, e.g. receiver electrodes **18c-2'** and **18c-4'** of sensors **14-2'** and **14-4'**, respectively, are connected to the inputs **54a** of a second detector **54**, and so on throughout the array. It should be understood that a multiplicity of sequentially driven drivelines may be utilized, with each driveline forming a column of an array, and with another multiplicity of detectors receiving the output of each row of the array of sensors.

Operation of the capacitor sensor matrix of panel **10''** may be best understood by considering a switch to be located between ground potential and the contactable surface of substrate **11** over the touch electrode of each sensor. Thus, switches SA through SD are respectively associated with respective touch electrodes **11a-1'** through **18a-4'** of sensors **14-1'** through **14-4'**, respectively. In the no-touch condition, the user's digit does not contact the substrate surface and the associated switch is open whereby the drive signals appear in sequence on the sequentially arranged drivelines, e.g. DRIVE **0** pulses appear on line **50**, then DRIVE **1** signals appear on line **51**, etc. The signals pass through the capacitances C_{TR} and C_{RC}, to the associated detectors **53** and **54**, for sensors **14-1'** and **14-2'**, when drive line **50** receives the DRIVE **0** pulse. Relatively high amplitude signals appear at the respective detector inputs and are detected to provide a first level at the detector outputs **53b** and **54b**, respectively, as output signals SENSOR **0** and SENSOR **1**, respectively. When any sensor is activated, by touching of the substrate front surface associated therewith, the equivalent switch is closed. Thus, if sensor **14-1'** is in the touch condition, switch SA is closed and the touch capacitance C_T thereof is coupled to ground potential, whereby the T-type capacitive voltage divider reduces the pulse magnitude present, when a DRIVE **0** pulse is present on driveline **50**, whereby the detector signal magnitude is reduced. A second detector output magnitude, at the detector output associated with the row of that sensor touched, obtains, indicating to external circuitry (not shown) that the sensor has been touch activated. Additional details as to operation of capacitive touch sensor arrays, and of a self-optimizing touch pad sensor circuit which may be utilized therewith, is described in U.S. Pat. No. 4,145,748, issued Mar. 20, 1979, assigned to the assignee of the present invention and incorporated herein by reference. This multiplexing scheme, which may have nine or more column drivelines and nine or more row detectors, is highly advantageous and the high level of multiplexing is made possible with our capacitive touch entry panel due to the accurate control of the transmitting and receiving capacitors of each sensor engendered by the fabrication of the sensors on double-sided printed circuit board and the like, with all of the capacitors associated with a particular detector having substantially the same relative balance and therefore not requiring further trimming or multiple detector thresholds in order to establish which sensor touch electrode is contacted when the drivelines are sequentially scanned. Also, the use of a guard electrode (electrode **40** of FIG. **2**), while not specifically shown in the schematic diagram of FIG. **3**, substantially prevents parasitic coupling from the driveline to the touch and receiving electrodes. The use of this guard electrode is especially important, because the dielectric constant of the substrate is substantially greater than the dielectric constant of air.

Elimination of parasitic coupling, by use of the guard electrode, causes substantially only the transmit and receive capacitances C_{TR} and C_{RC} to be present in each sensor. Also, the guard electrode substantially reduces radio frequency interference effects which may occur due to the presence of high-voltage, fast-rise-time pulses on the relatively long drive lines, which drive lines may otherwise act as radiating antennas without the presence of the guard electrode.

Referring now to FIGS. **4***a* and **4***b*, a prior art capacitive sensor panel (FIG. **4***a*) is compared to a capacitive touch entry panel (FIG. **4***b*) of the present invention. In the prior art embodiment, a pair of adjacent sensors **60** and **61** each have a contactable touch electrode **60***a* and **61***a* fabricated upon the front surface **63***a* of an insulative substrate **63**. Transmitter electrodes **60***b* and **61***b* and receiver electrodes **60***c* and **61***c*, respectively, of sensors **60** and **61**, are fabricated upon the substrate rear surface **63***b*. Thus, touch electrodes **60***a* and **61***a* are directly contactable by user personnel digit **12**'. In the touch entry panel of the present invention the transmitter electrodes **18***b*-**1**" and **18***b*-**2**", and the receiver electrodes **18***c*-**1**" and **18**-*c***2**", of respective sensors **14-1**" and **14-2**", are upon the rear surface of insulative layer **16**', while the "touch" electrodes **18***a*-**1**" and **18***a*-**2**", respectively, are not directly contactable by personnel digit **12**, due to the interposing of insulative substrate **11***a* therebetween. The touch entry panel of the present invention allows for reduced sensor touch electrode area, with respect to the area of the contactable touch electrodes of the prior art embodiment of FIG. **4***a*, due to the ability to mount the detector circuitry in very close proximity to the sensor capacitors, with consequent substantial reduction of parasitic capacitance, and also due to the fact that there is no advantage to having touch pads any larger than the area normally associated with the touching portion of the digit, whereby touch-pad areas of about one-half inch square are utilizable.

Due to the contactable nature of the touch pad electrode **60***a* and **61***a* of the prior art apparatus, relatively large spacings therebetween is required. That is, if the front surface **63***a* of the insulator substrate is covered with water or detergent and the like, as often happens with appliances (wherein touch pad sensors are often utilized), the increase in dielectric constant due to the water, or the conductive effects due to surface contamination, will form a parasitic impedance ZPARASITIC **65** or lesser magnitude than if contamination effects were not present, and increase the coupling between adjacent touch electrodes. The parasitic impedance problem requires that the sheet resistivity of the insulative member **63** be relatively high, as the magnitude of the parasitic impedance is affected by the spacing between the touch pad conductor edges and not the center-to-center spacing of the contactable touch electrodes themselves. Accordingly, in the prior art embodiments, the conductor spacing had to be relatively large to reduce the intersensor coupling via the parasitic impedances **65**. In the present invention, parasitic impedance effects only occur if surface contamination initially makes contact at the point upon the front surface **11***a*' of the insulative substrate at which a finger touches the substrate, and also provides a complete conducting sheet, of sufficiently low conductivity, to cause a parasitic impedance to be formed over the area above an adjacent touch sensor touch electrode. Therefore, the important distance is the center-to-center spacing between touch electrodes **18***a*-**1**" and **18***a*-**2**", rather than the spcing between the closest edges thereof. These reasons allow the sensors to occupy not only a small area, but to have closer spacings, whereby a capacitive touch entry panel having a greater sensor density, i.e. the number of capacitive touch sensors for unit area, is provided.

While the present invention has been described with respect to presently preferred embodiments thereof, many modifications and variations will now become apparent to those skilled in the art. It is our intent, therefore, to be limited only by the scope of the appending claims, rather than by the specific details of the exemplary embodiments described herein.

What is claimed is:

1. A touch entry panel activatible upon contact by a user member, comprising:

a relatively thick insulative substrate having a first surface contactable by user personnel, and a second surface opposite said first surface, with both said surfaces being devoid of operational elements of said panel;

a single member having a single insulative layer with a first surface and a second surface opposite said insulative layer first surface, and having all electrodes of at least one capacitive touch sensor formed completely thereon; each capacitive touch sensor comprising a touch electrode fabricated on said insulative layer first surface and a pair of spaced-apart electrodes fabricated upon the second surface of said insulative layer and in registration with the touch electrode of that sensor;

a terminal associated with each of said spaced-apart electrodes;

lead means fabricated upon said insulative layer second surface for interconnecting each of said spaced-apart electrodes and its associated terminal;

conductive guard means disposed upon said insulative layer first surface and positioned for shielding the lead means of at least one of said at least one capacitive touch sensor from capacitive effects when said substrate first surface is contacted by said user member; and

means for fastening said member first surface adjacent to said substrate second surface; said substrate being formed of a material having a dielectric constant sufficiently high enough to cause one of said at least one capacitance touch sensor to be activitated when the user member contacts a portion of the substrate first surface opposite the touch electrode of the capacitive touch sensor to be activated.

2. The touch entry panel of claim **1**, wherein said member is a sheet of double-sided printed circuit board having an insulative layer sandwiched between a pair of conductive planes, with the conductive material of each plane being selectively removed to leave conductive areas forming the respective touch and spaced-apart electrodes.

3. The touch entry panel of claim **1**, further comprising at least one electronic component mounted on said member; and lead means for interconnecting said at least one electronic component with associated ones of said electrodes and the lead means associated therewith.

4. The touch entry panel of claim **1**, wherein said substrate is fabricated of a transparent insulative material.

5. The touch entry panel of claim **4**, wherein said substrate is fabricated of glass.

6. The touch entry panel of claim **5**, wherein the glass has a dielectric constant of between about 6 and about 8.

7. The touch entry panel of claim **1**, wherein each of said touch electrodes is about one-half inch square.

8. The touch entry panel of claim **1**, wherein said member has a portion of the area thereof removed for allowing viewing of an object mounted behind the touch entry panel and positioned to be visible through said opening.

* * * * *