US 20050230596A1

(19) United States

(12) Patent Application Publication

(10) Pub. No.: US 2005/0230596 A1

(43) Pub. Date: Oct. 20, 2005

Howell et al.

(54) RADIATION MONITORING SYSTEM

(76) Inventors: **Thomas A. Howell**, Palo Alto, CA (US); **David Chao**, Saratoga, CA (US); **C. Douglass Thomas**, Campbell, CA (US); **Peter P. Tong**, Mountain View, CA (US)

Correspondence Address:
IPVENTURE, INC.
5150 EL CAMINO REAL
SUITE A-22
LOS ALTOS, CA 94022 (US)

(21) Appl. No.: **11/078,857**

(22) Filed: **Mar. 11, 2005**

Related U.S. Application Data

(60) Provisional application No. 60/562,798, filed on Apr. 15, 2004. Provisional application No. 60/583,169, filed on Jun. 26, 2004. Provisional application No. 60/592,045, filed on Jul. 28, 2004. Provisional application No. 60/605,191, filed on Aug. 28, 2004. Provisional application No. 60/618,107, filed on Oct. 12, 2004. Provisional application No. 60/620,238, filed on Oct. 18, 2004. Provisional application No. 60/647,836, filed on Jan. 31, 2005. Provisional application No. 60/647,826, filed on Jan. 31, 2005.

Publication Classification

(51) **Int. Cl.**[7] **G03C 1/00**

(52) **U.S. Cl.** **250/200**

(57) **ABSTRACT**

An electronic circuit having radiation monitoring capability is disclosed. Radiation, such as ultraviolet (UV) radiation, infrared (IR) radiation or light, can be measured by the electronic circuit. The measured radiation can then be used in providing radiation-related information to a user of the electronic circuit. In one implementation, the electronic circuit is provided within eyewear so that the user of the eyewear is able to easily monitor their exposure to radiation.

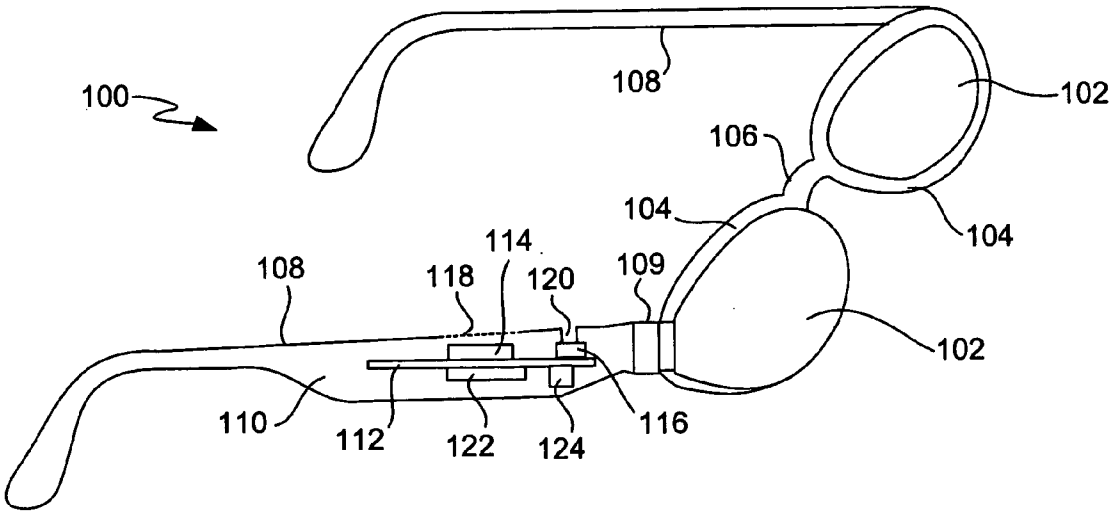

Luxottica Ex. 1015
IPR Petition USP 8,801,174

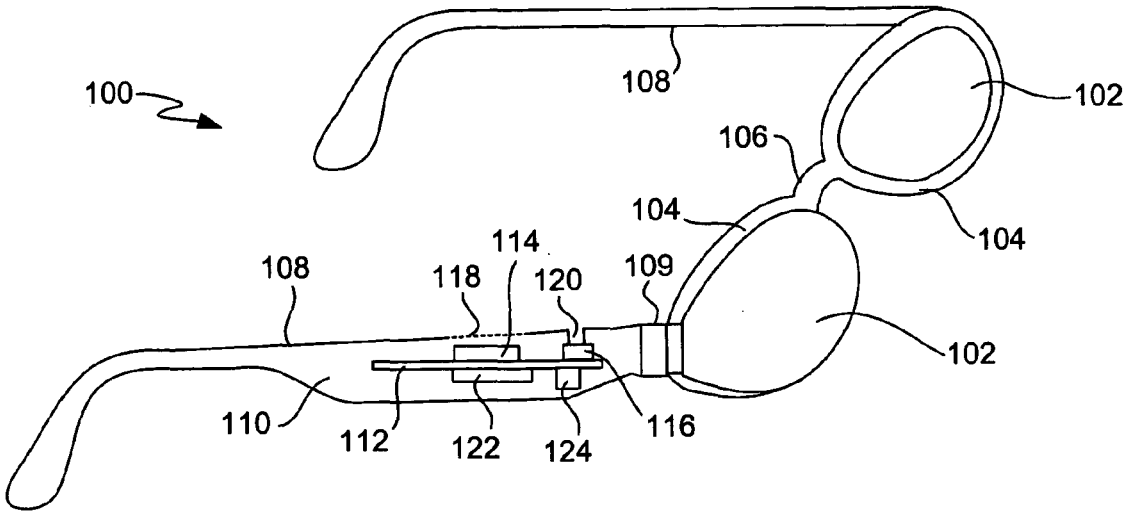

FIG. 1

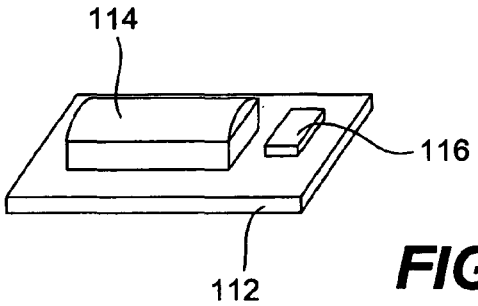

FIG. 2A

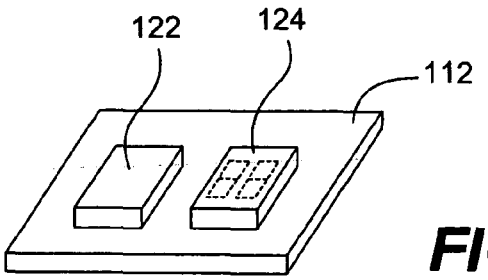

FIG. 2B

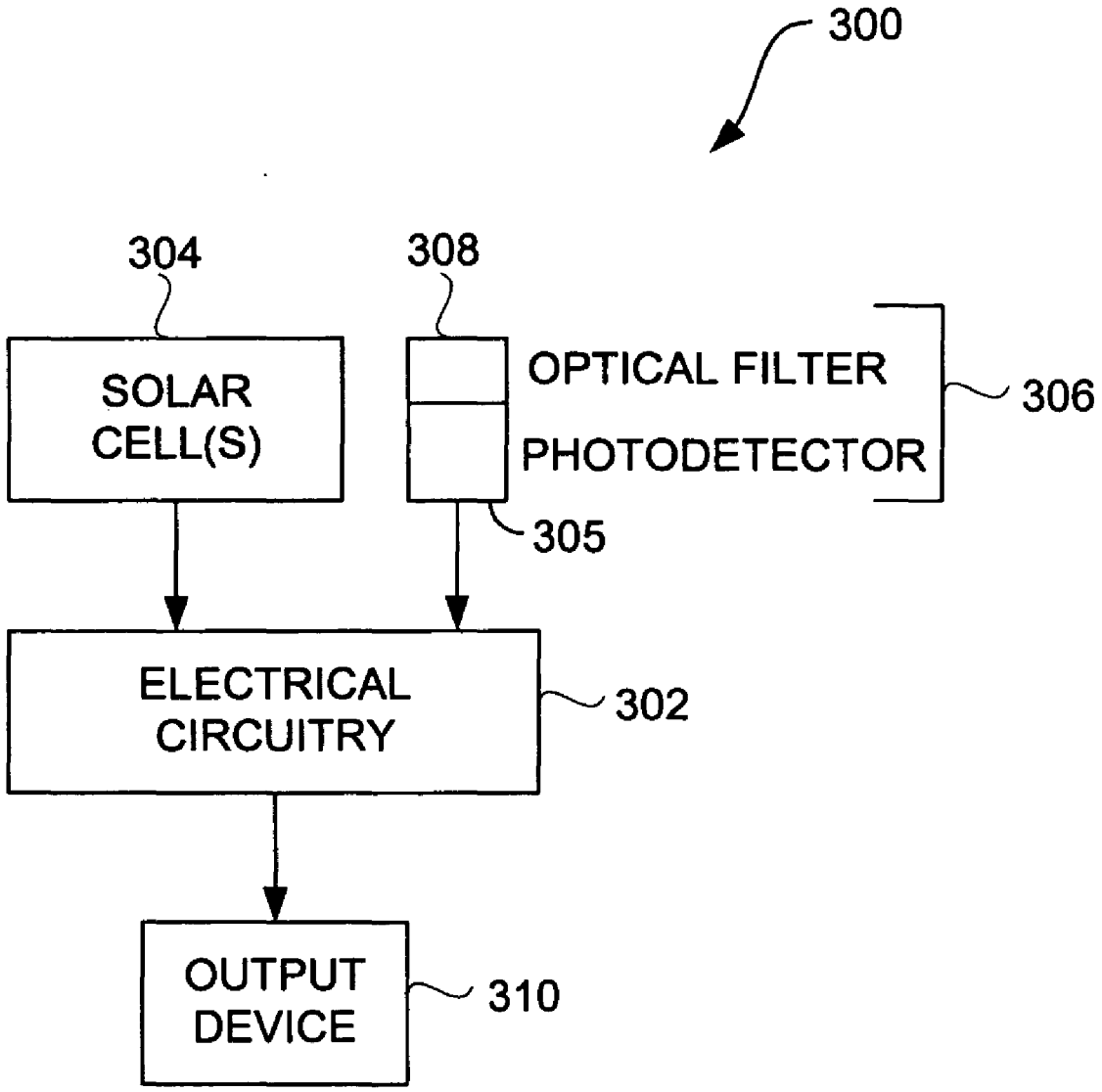
300
304
308
SOLAR CELL(S)
OPTICAL FILTER
PHOTODETECTOR
306
305
ELECTRICAL CIRCUITRY
302
OUTPUT DEVICE
310

FIG. 3

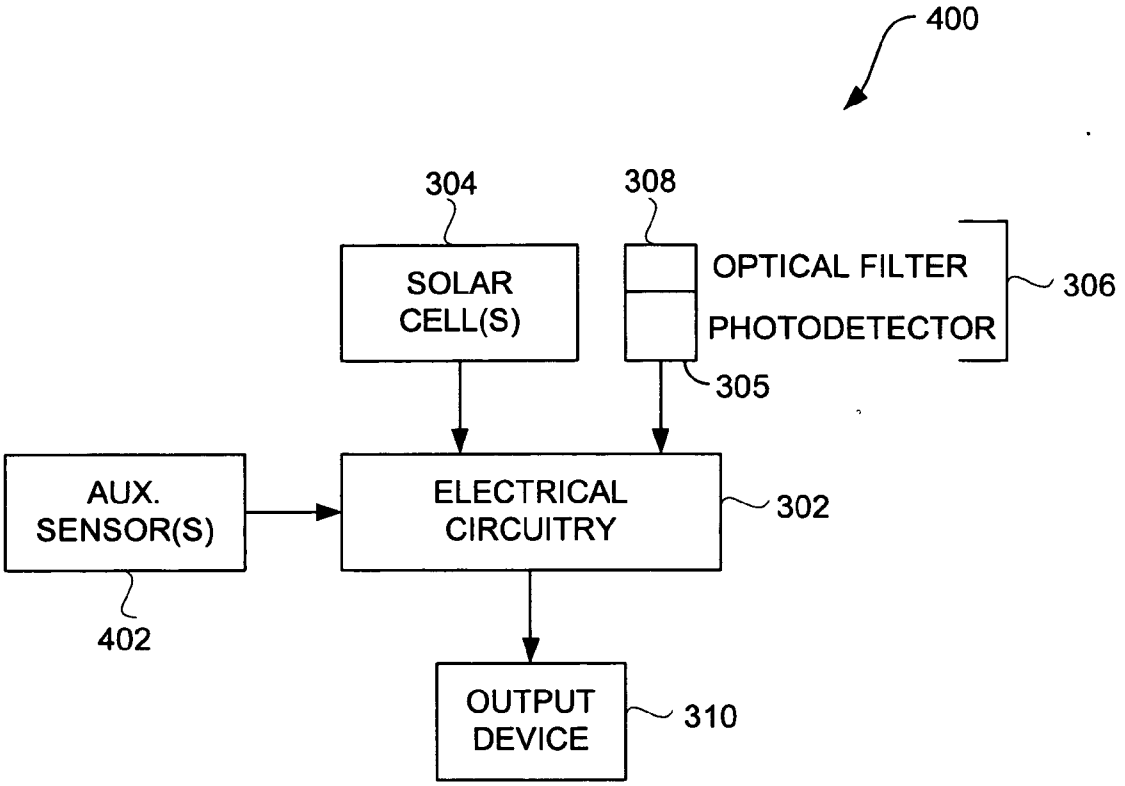
400
304
308
SOLAR CELL(S)
OPTICAL FILTER
PHOTODETECTOR
306
305
AUX. SENSOR(S)
ELECTRICAL CIRCUITRY
302
402
OUTPUT DEVICE
310

FIG. 4A

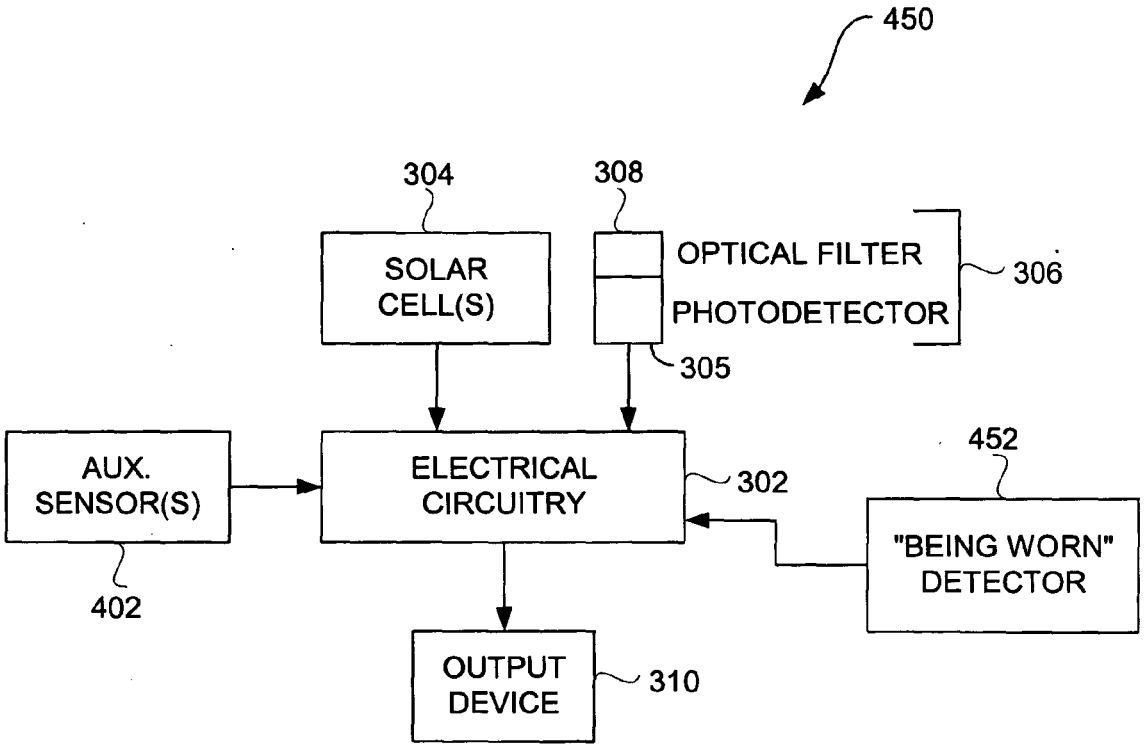
450
304
308
SOLAR CELL(S)
OPTICAL FILTER
PHOTODETECTOR
306
305
AUX. SENSOR(S)
ELECTRICAL CIRCUITRY
302
452
"BEING WORN" DETECTOR
402
OUTPUT DEVICE
310

FIG. 4B

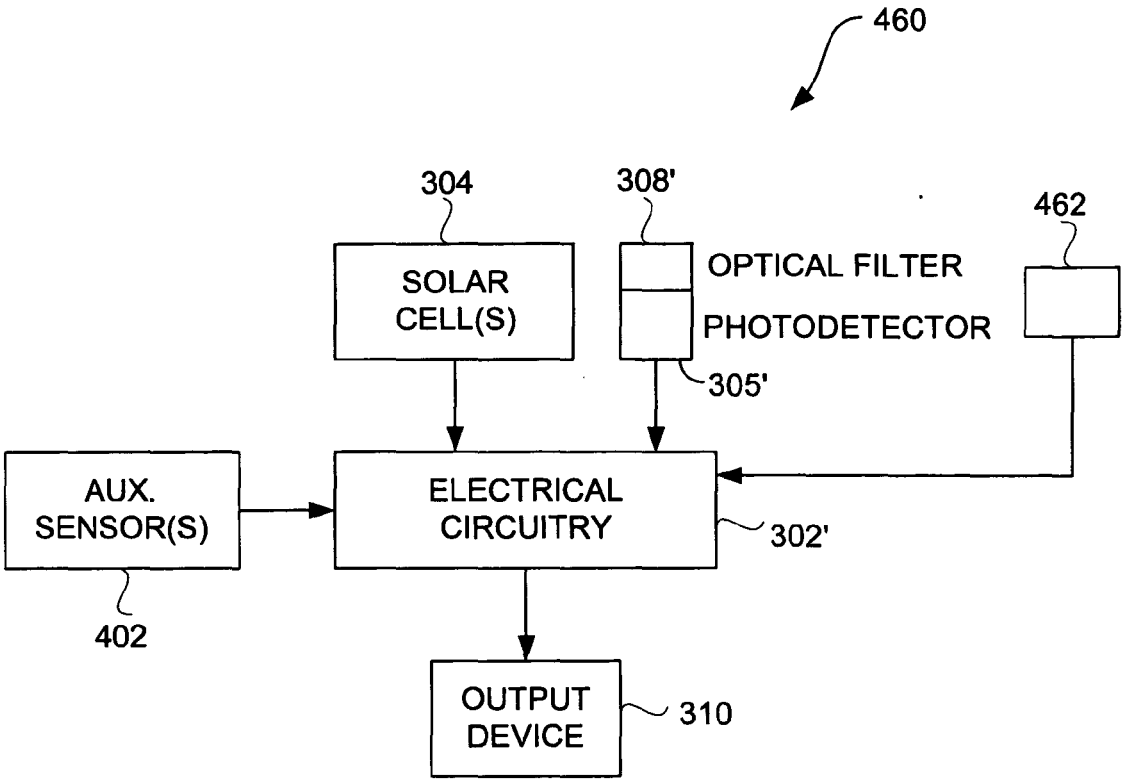
460
304
308'
462
SOLAR CELL(S)
OPTICAL FILTER
PHOTODETECTOR
305'
AUX. SENSOR(S)
ELECTRICAL CIRCUITRY
302'
402
OUTPUT DEVICE
310

FIG. 4C

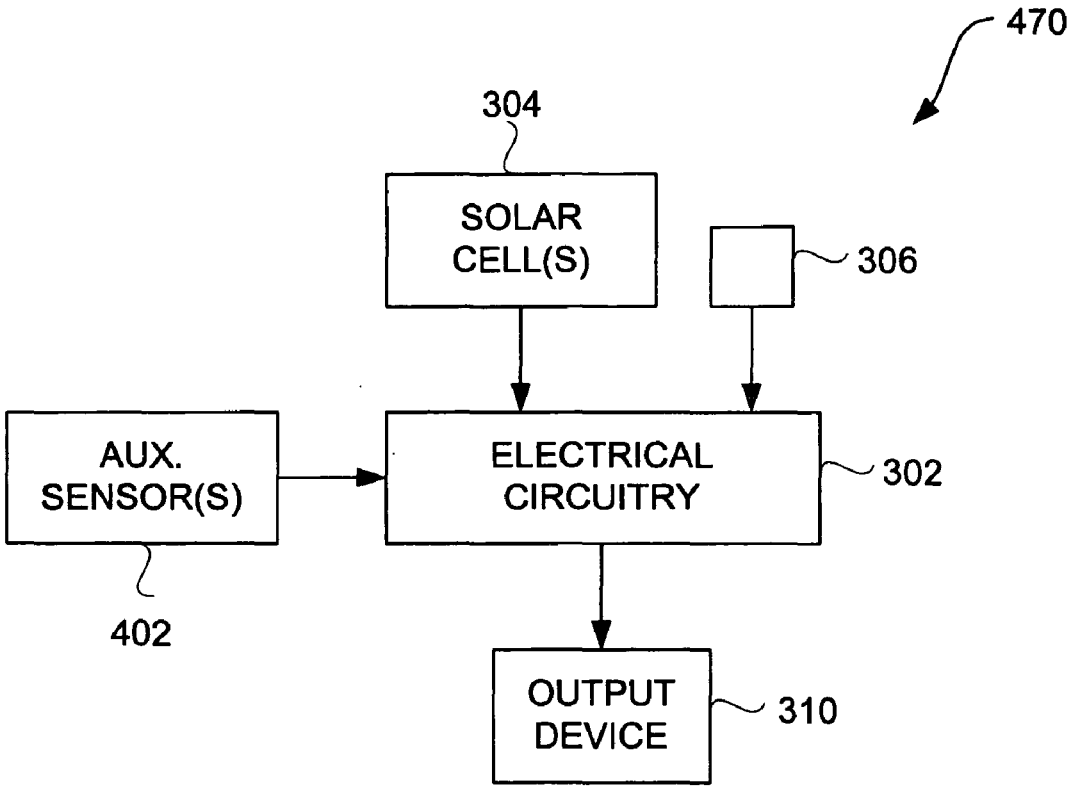
470
304
SOLAR CELL(S)
306
AUX. SENSOR(S)
ELECTRICAL CIRCUITRY
302
402
OUTPUT DEVICE
310

FIG. 4D

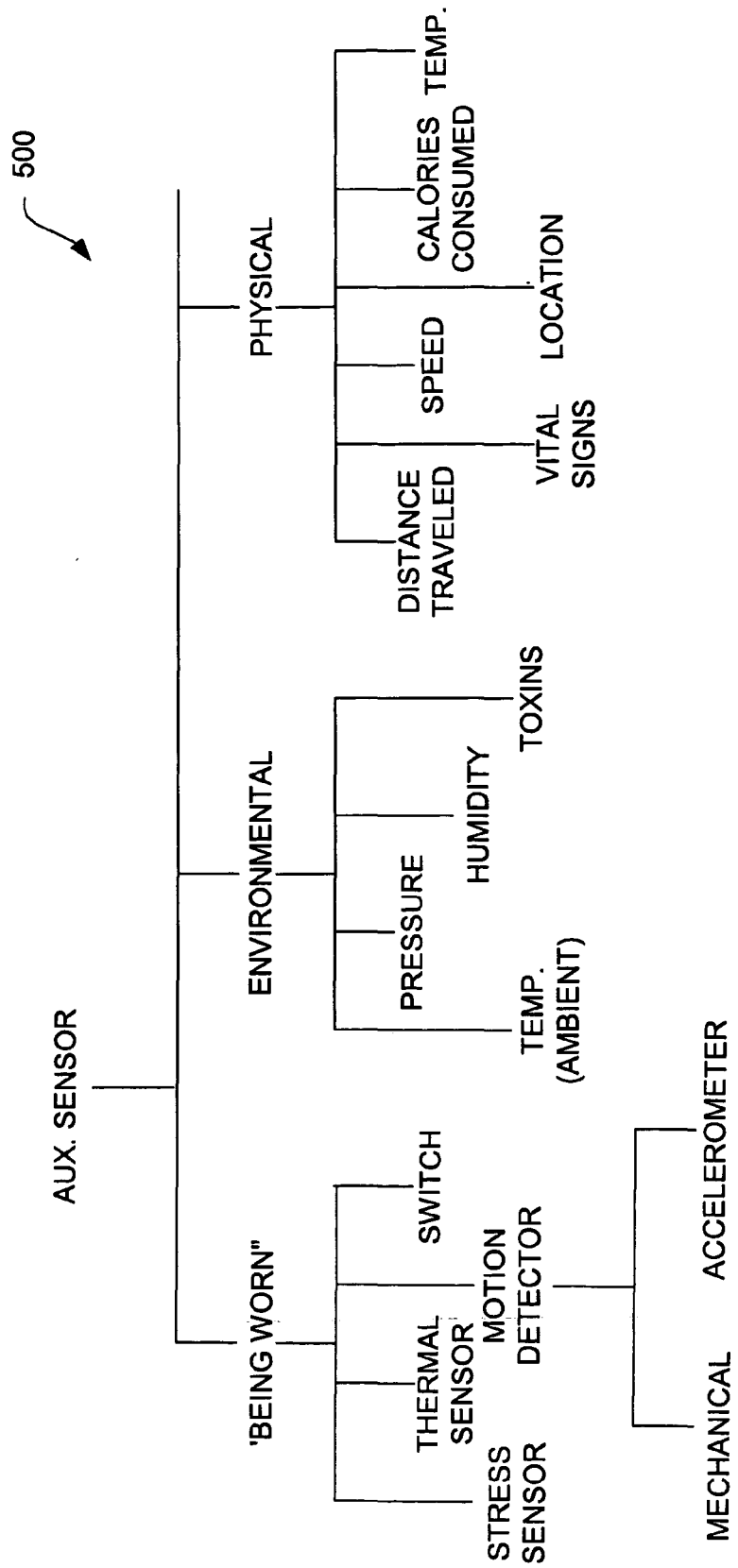
500
AUX. SENSOR
PHYSICAL
ENVIRONMENTAL
'BEING WORN"
DISTANCE TRAVELED
SPEED
CALORIES CONSUMED
TEMP.
VITAL SIGNS
LOCATION
PRESSURE
HUMIDITY
TOXINS
TEMP. (AMBIENT)
STRESS SENSOR
THERMAL SENSOR
MOTION DETECTOR
SWITCH
MECHANICAL
ACCELEROMETER

FIG. 5

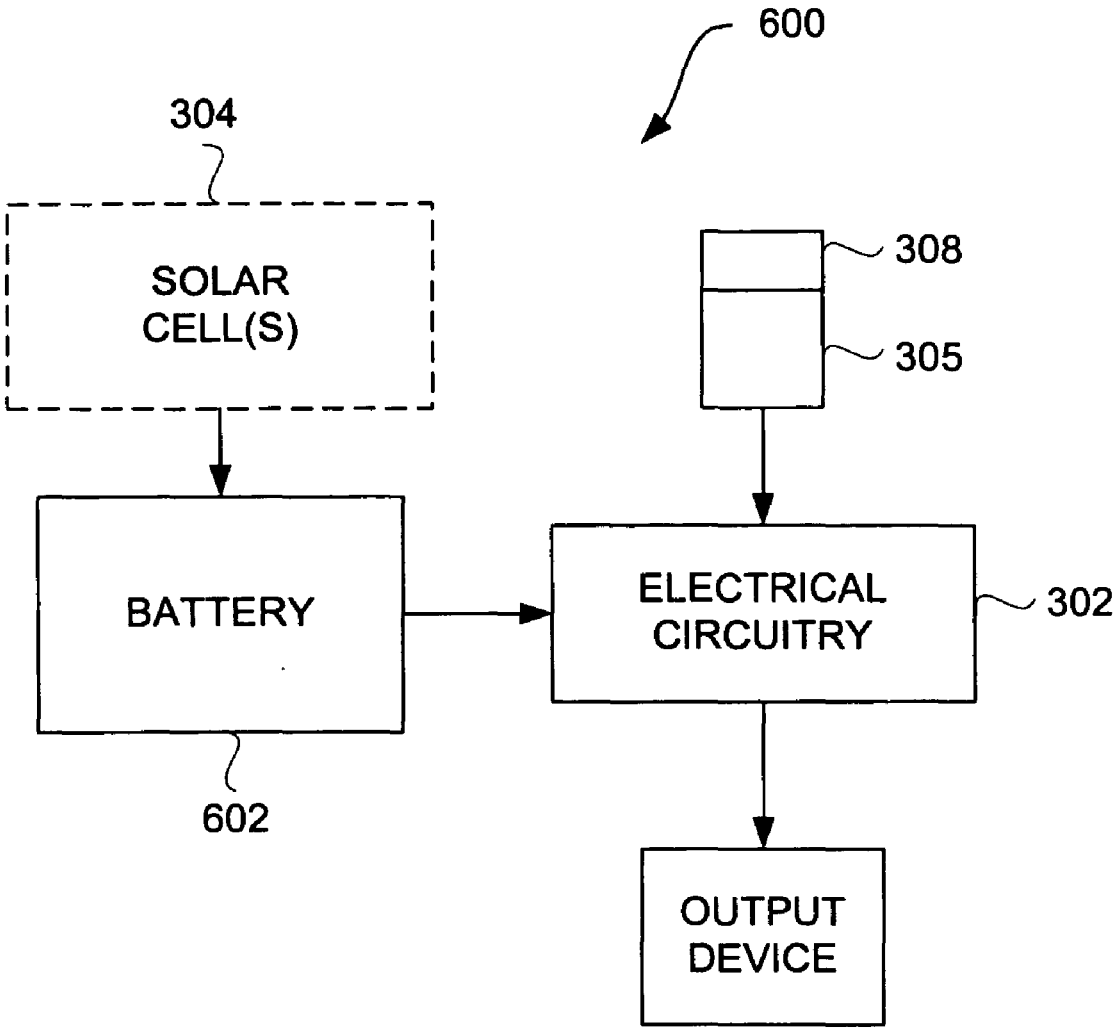
600
304
SOLAR
CELL(S)
308
305
BATTERY
ELECTRICAL
CIRCUITRY
302
602
OUTPUT
DEVICE

FIG. 6

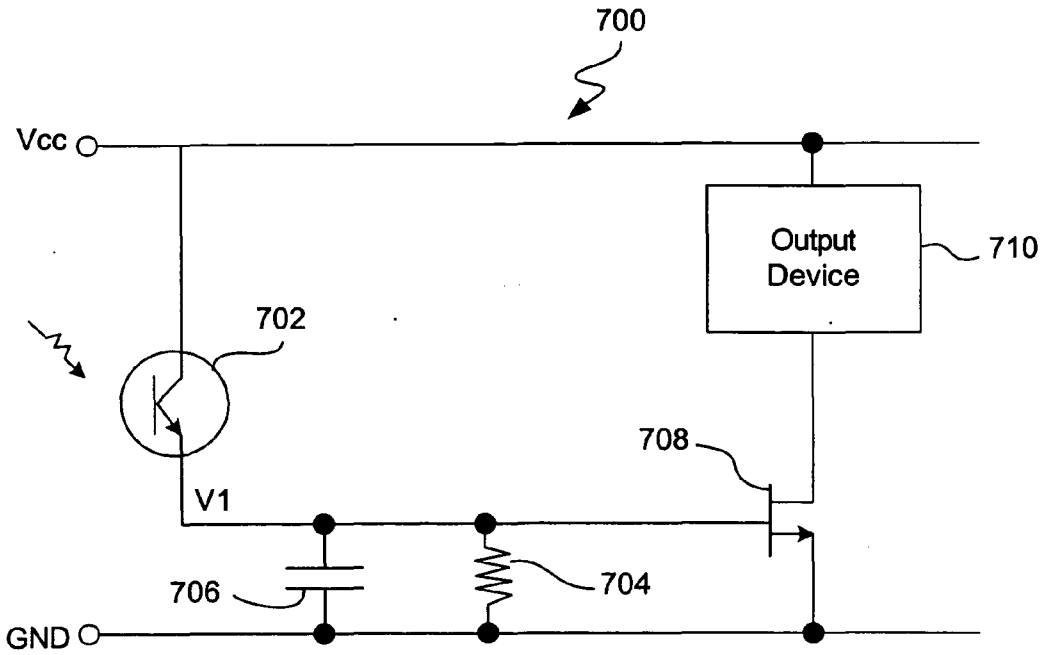
700
Vcc
Output
Device
710
702
708
V1
706
704
GND

FIG. 7A

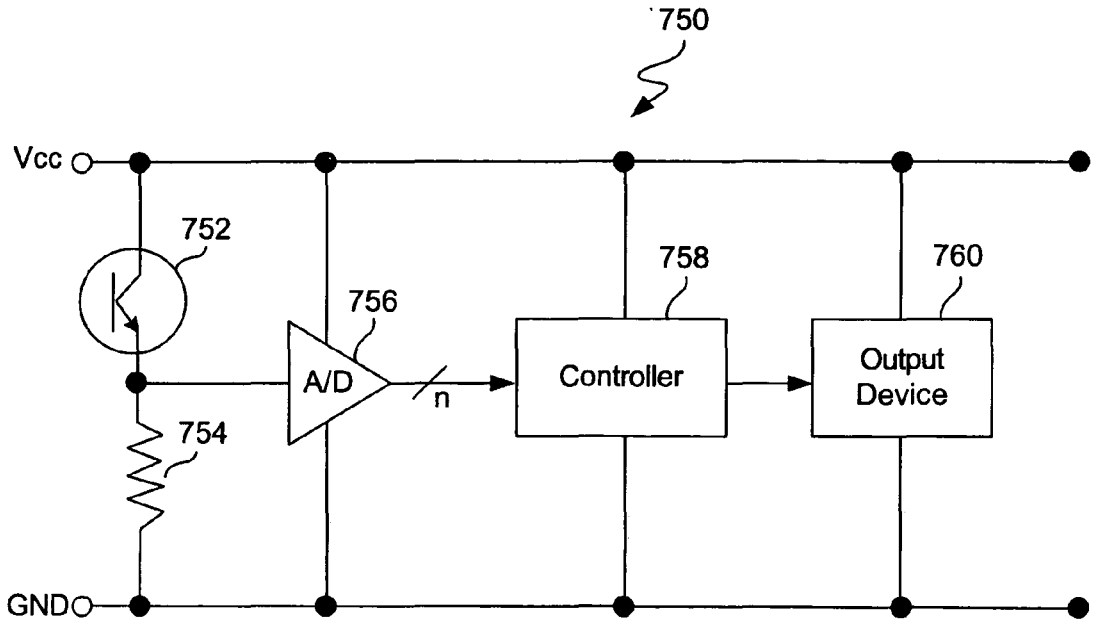
750
Vcc
752
756
758
760
A/D
n
Controller
Output
Device
754
GND

FIG. 7B

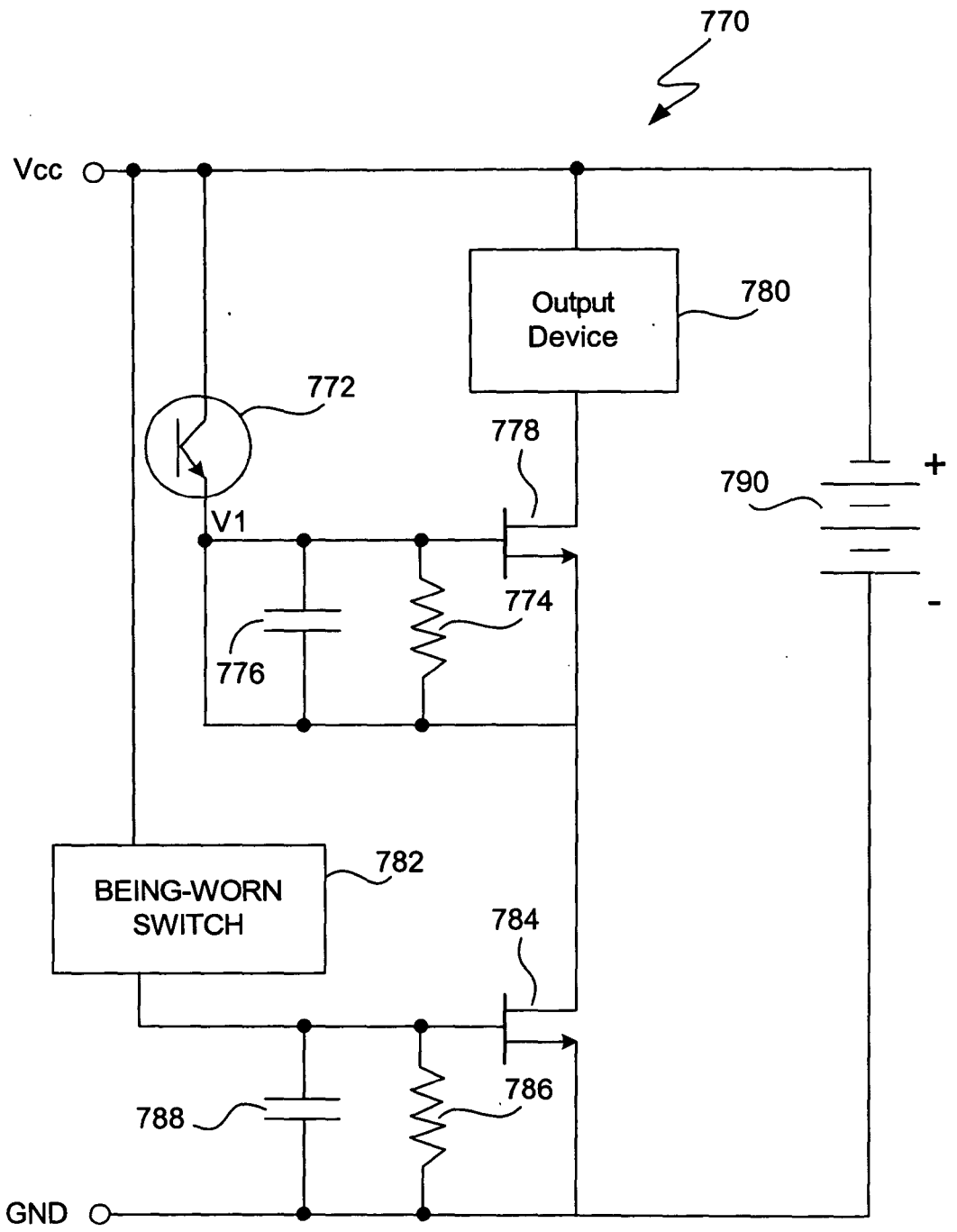
770
Vcc
Output Device
780
772
778
790
+
V1
774
-
776
BEING-WORN SWITCH
782
784
786
788
GND

FIG. 7C

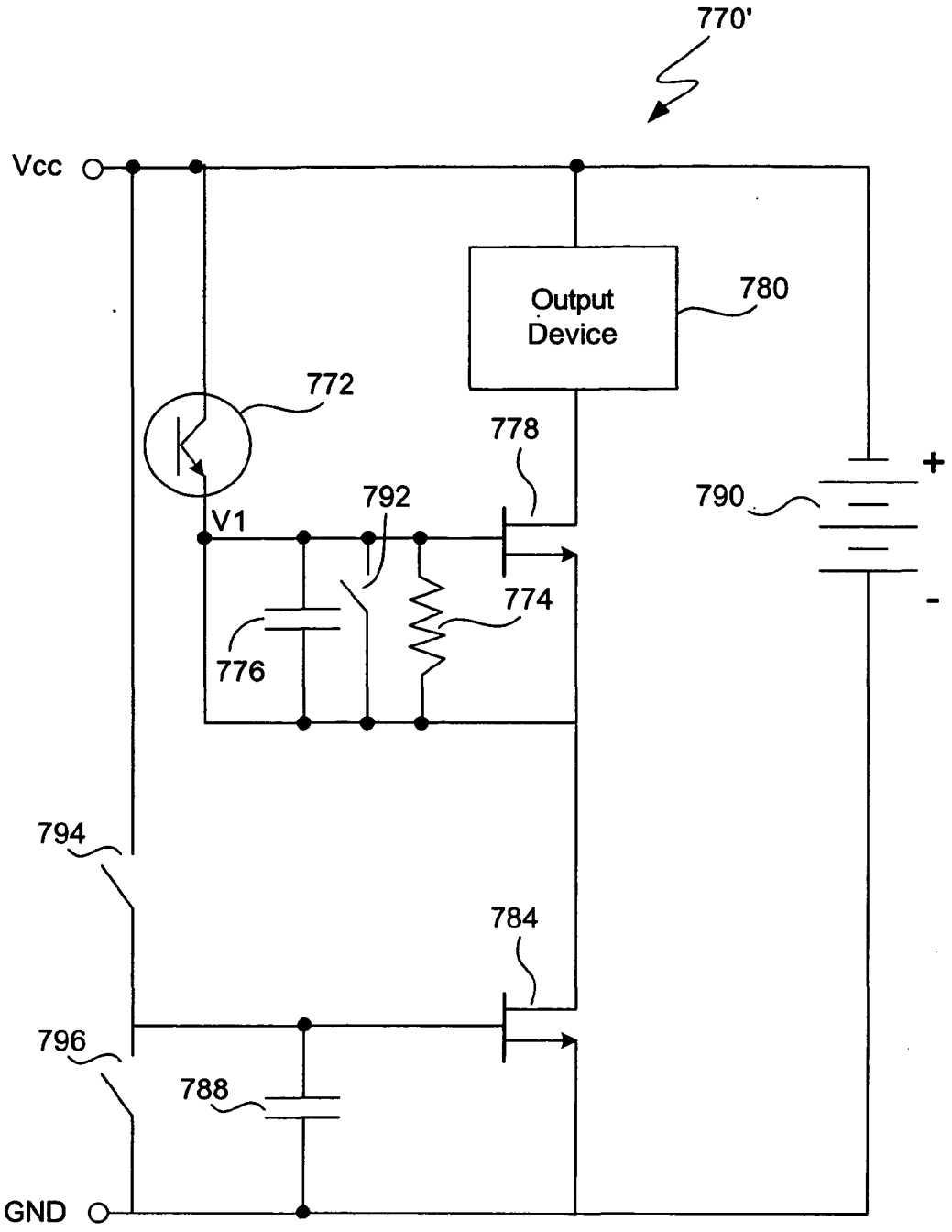
770'
Vcc
Output Device
780
772
778
792
V1
790
+
-
774
776
794
784
796
788
GND

FIG. 7D

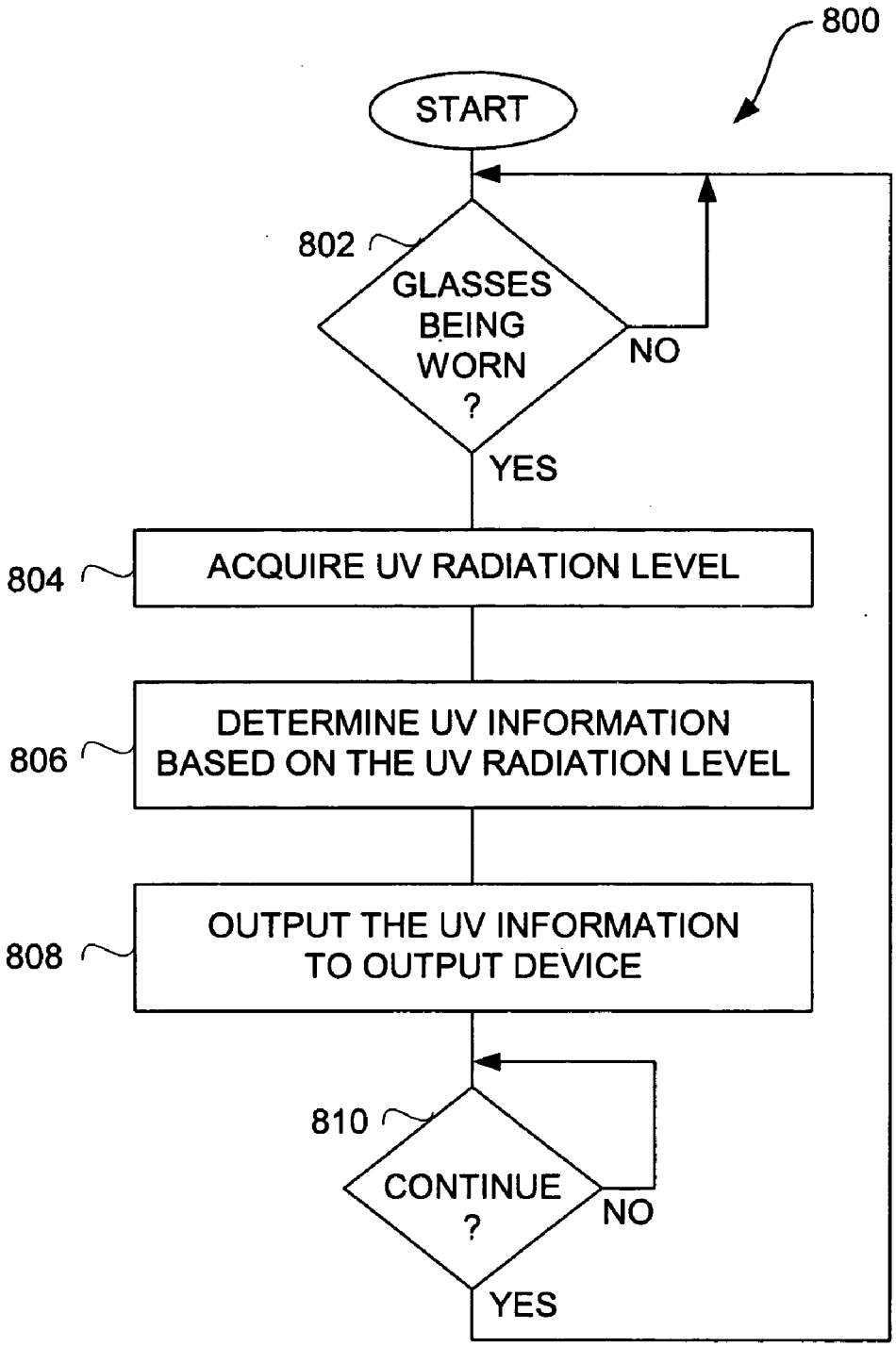
800
START
802
GLASSES BEING WORN ?
NO
YES
804
ACQUIRE UV RADIATION LEVEL
806
DETERMINE UV INFORMATION BASED ON THE UV RADIATION LEVEL
808
OUTPUT THE UV INFORMATION TO OUTPUT DEVICE
810
CONTINUE ?
NO
YES

FIG. 8

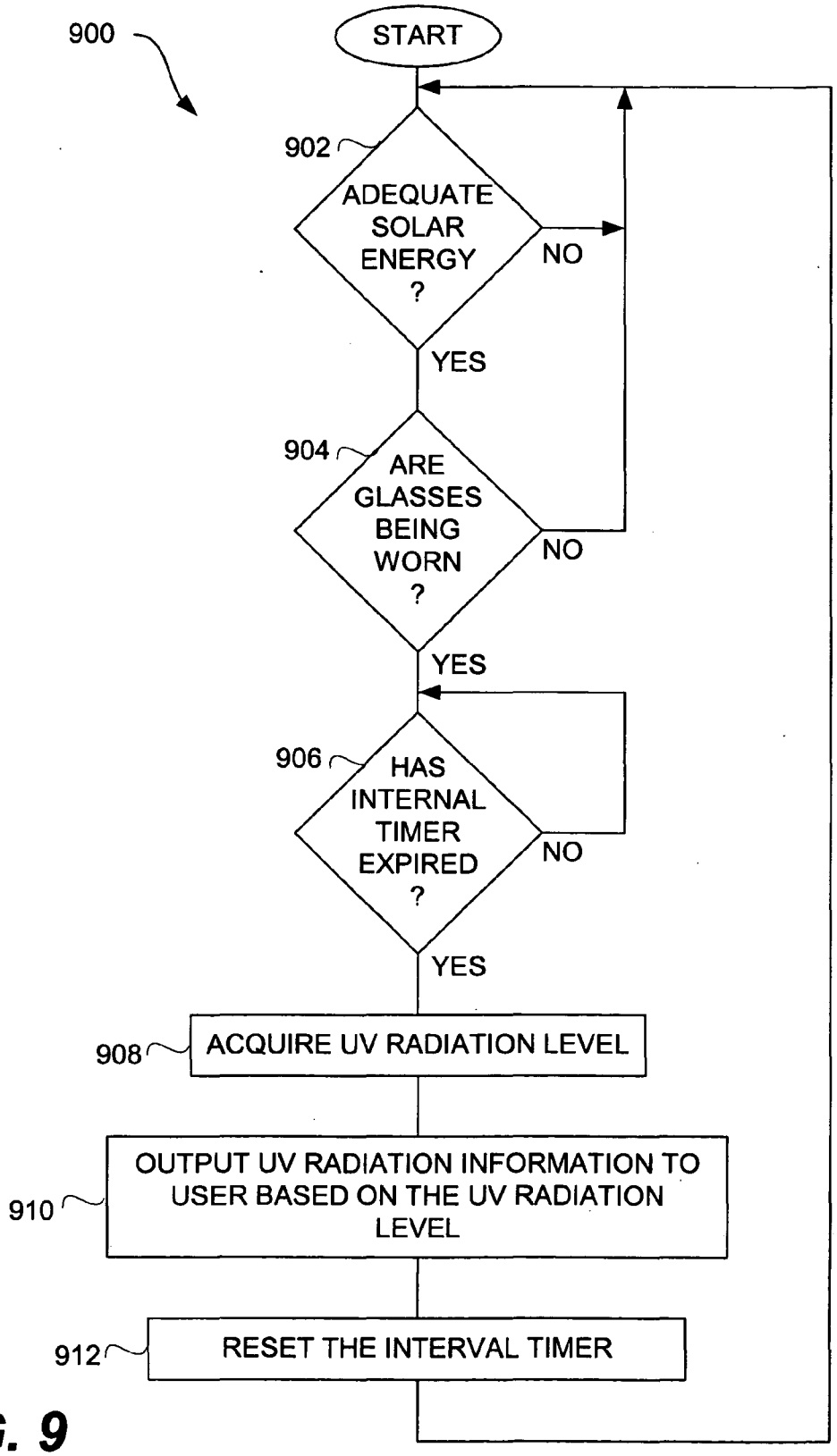
900
START
902
ADEQUATE SOLAR ENERGY ?
NO
YES
904
ARE GLASSES BEING WORN ?
NO
YES
906
HAS INTERNAL TIMER EXPIRED ?
NO
YES
908
ACQUIRE UV RADIATION LEVEL
910
OUTPUT UV RADIATION INFORMATION TO USER BASED ON THE UV RADIATION LEVEL
912
RESET THE INTERVAL TIMER

FIG. 9

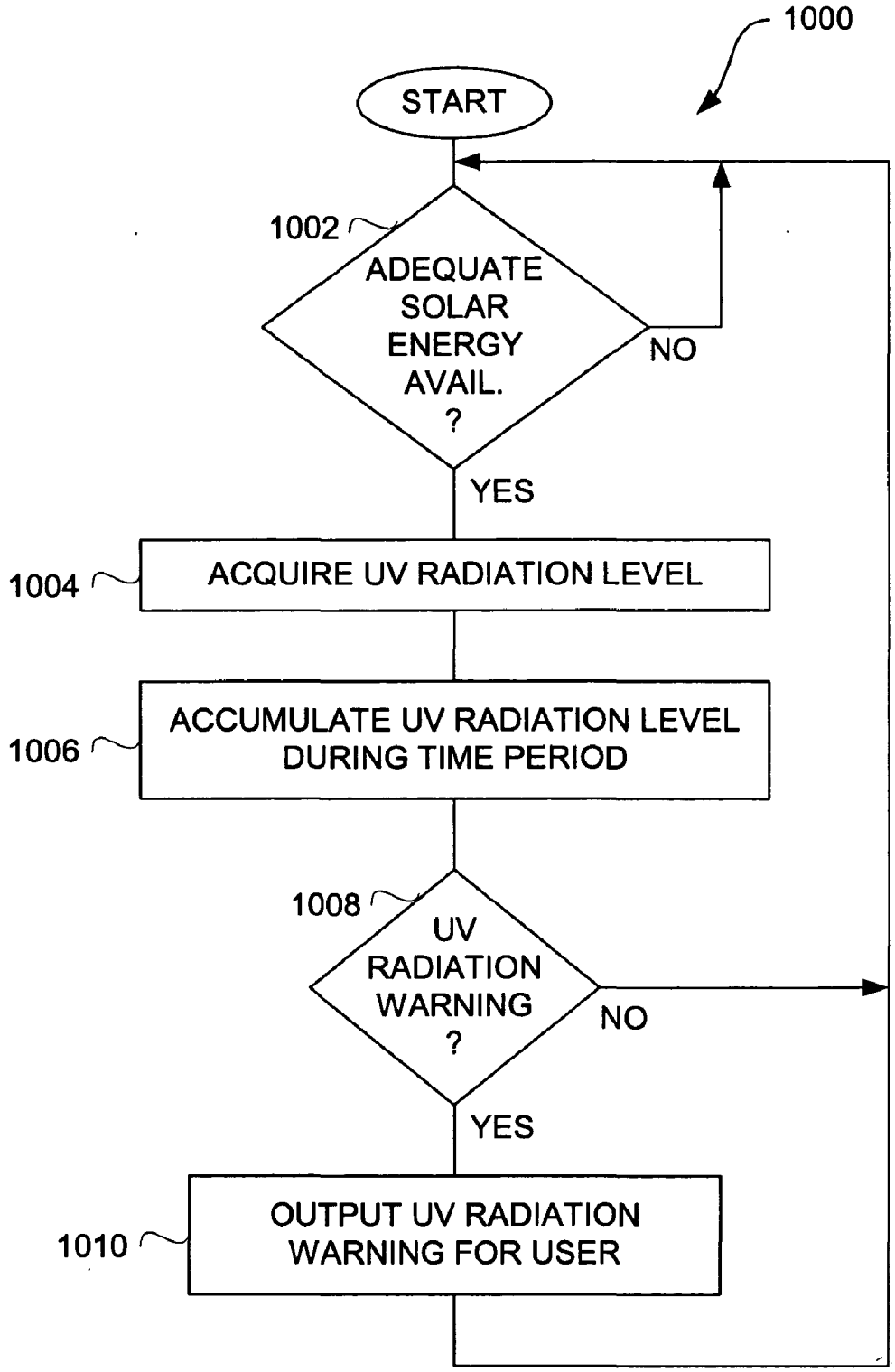
1000
START
1002
ADEQUATE SOLAR ENERGY AVAIL. ?
NO
YES
1004
ACQUIRE UV RADIATION LEVEL
1006
ACCUMULATE UV RADIATION LEVEL DURING TIME PERIOD
1008
UV RADIATION WARNING ?
NO
YES
1010
OUTPUT UV RADIATION WARNING FOR USER

FIG. 10

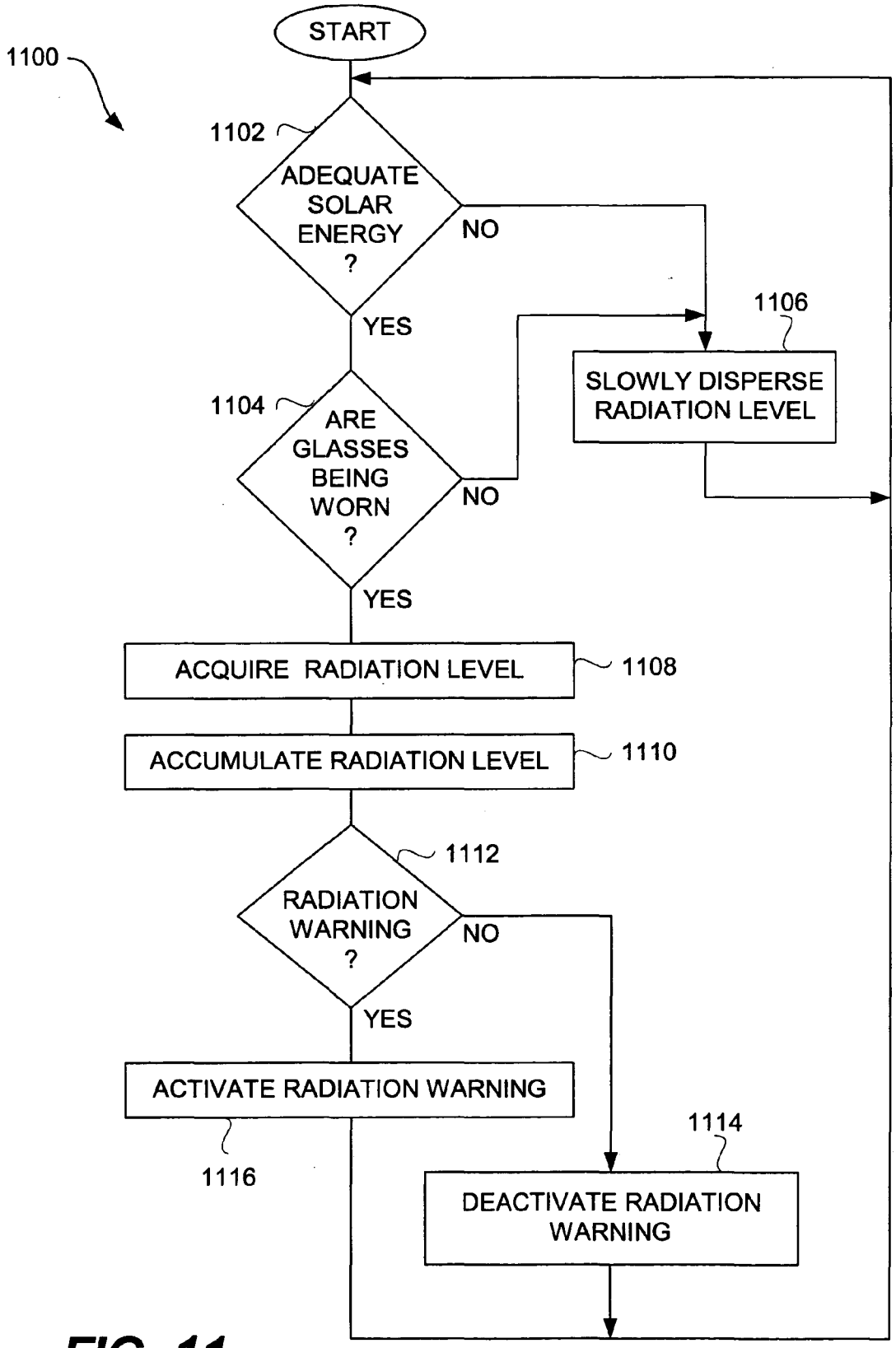
1100
START
1102
ADEQUATE SOLAR ENERGY ?
NO
YES
1106
SLOWLY DISPERSE RADIATION LEVEL
1104
ARE GLASSES BEING WORN ?
NO
YES
ACQUIRE RADIATION LEVEL
1108
ACCUMULATE RADIATION LEVEL
1110
1112
RADIATION WARNING ?
NO
YES
ACTIVATE RADIATION WARNING
1116
1114
DEACTIVATE RADIATION WARNING

FIG. 11

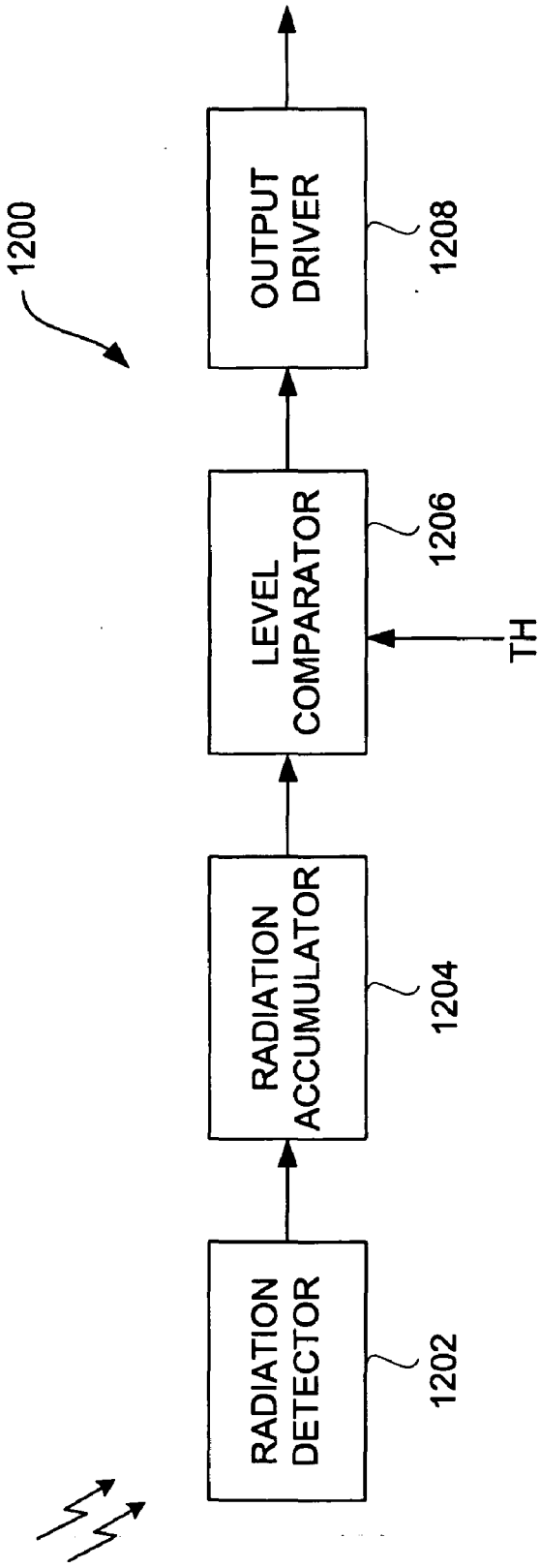
1200
RADIATION DETECTOR
1202
RADIATION ACCUMULATOR
1204
LEVEL COMPARATOR
1206
TH
OUTPUT DRIVER
1208

FIG. 12

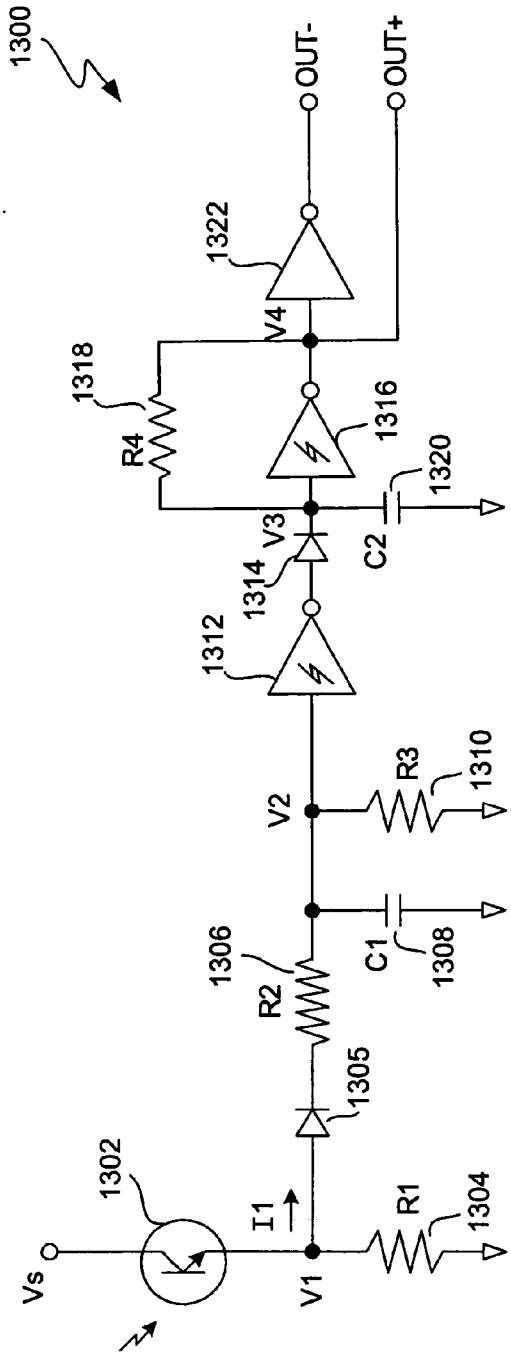

FIG. 13A

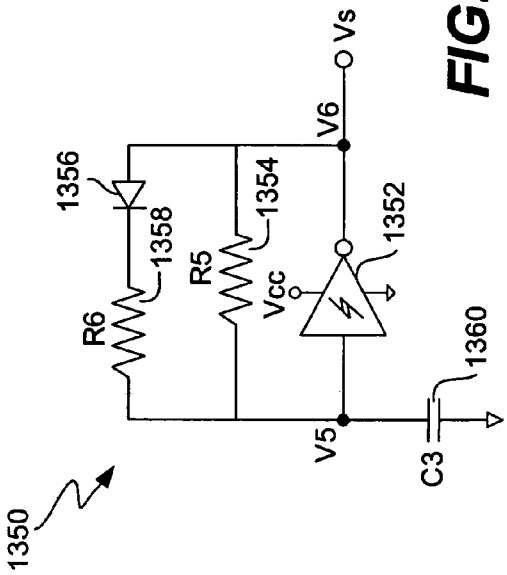

FIG. 13B

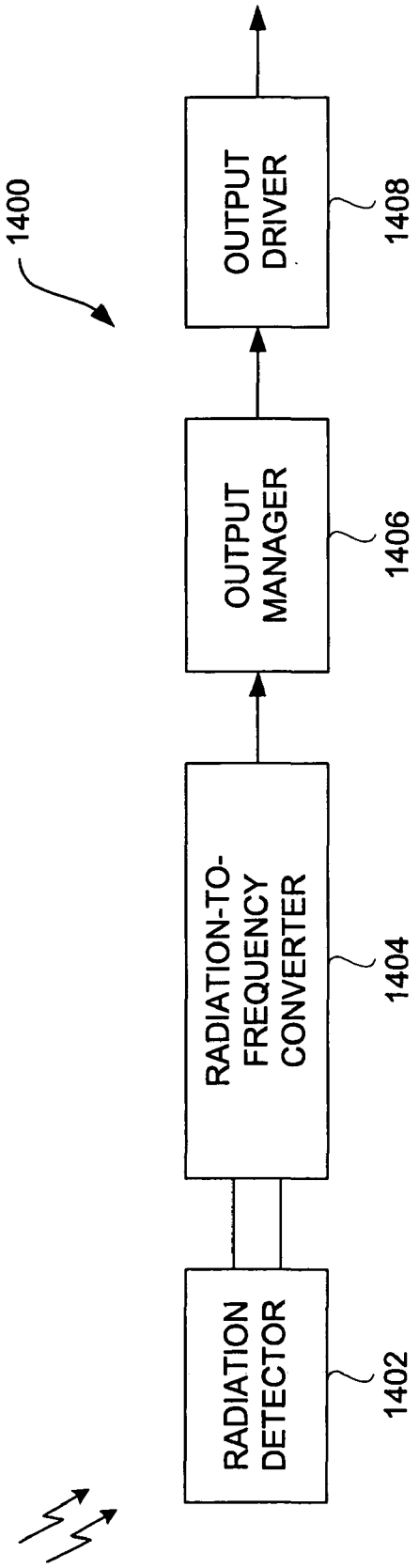
1400
RADIATION DETECTOR
1402
RADIATION-TO-FREQUENCY CONVERTER
1404
OUTPUT MANAGER
1406
OUTPUT DRIVER
1408

FIG. 14A

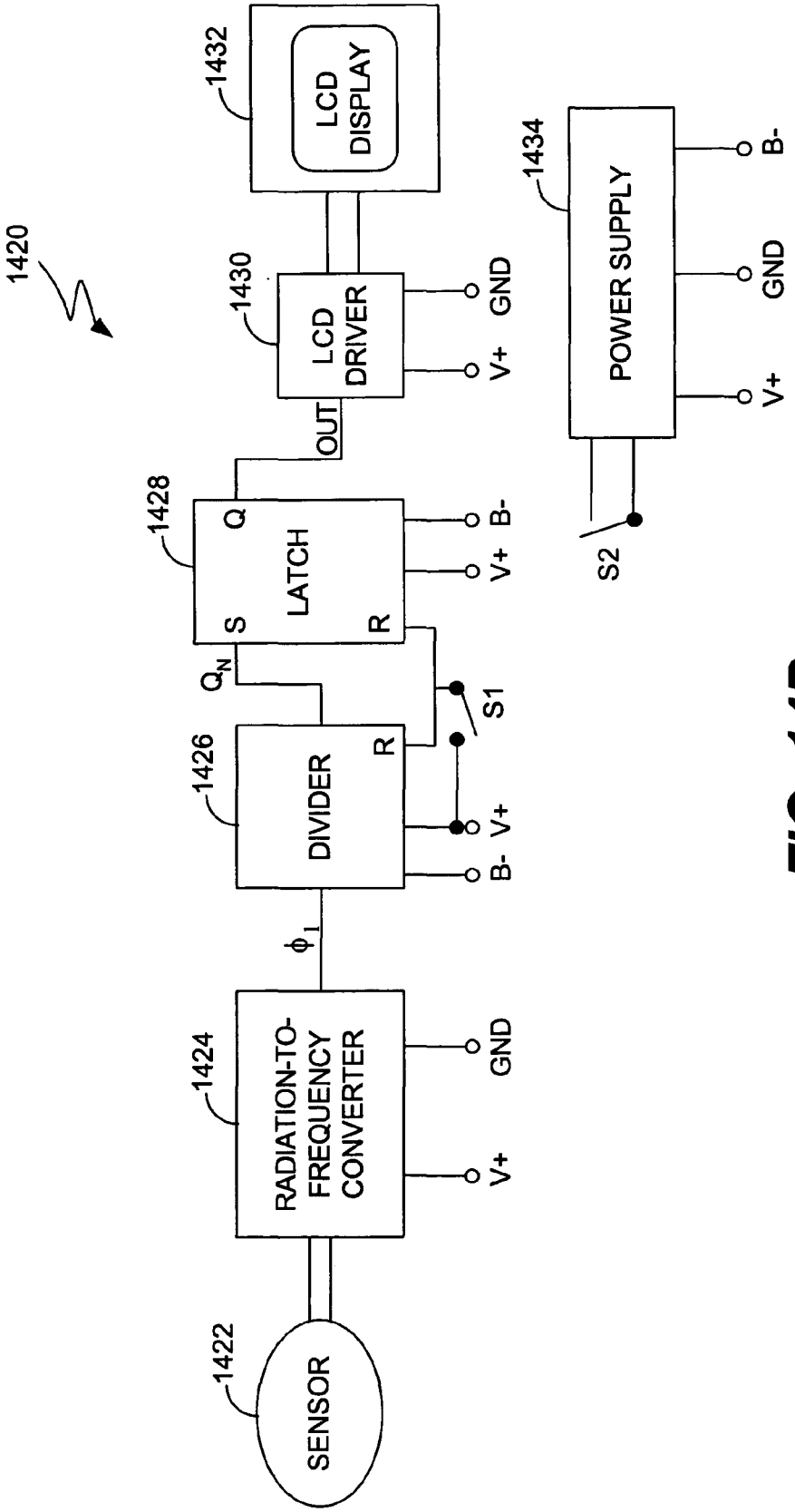
1420
1422
SENSOR
1424
RADIATION-TO-FREQUENCY CONVERTER
V+
GND
ϕ_1
1426
DIVIDER
R
B-
V+
S1
Q_N
1428
LATCH
S
Q
R
V+
B-
OUT
1430
LCD DRIVER
V+
GND
1432
LCD DISPLAY
1434
POWER SUPPLY
V+
GND
B-
S2

FIG. 14B

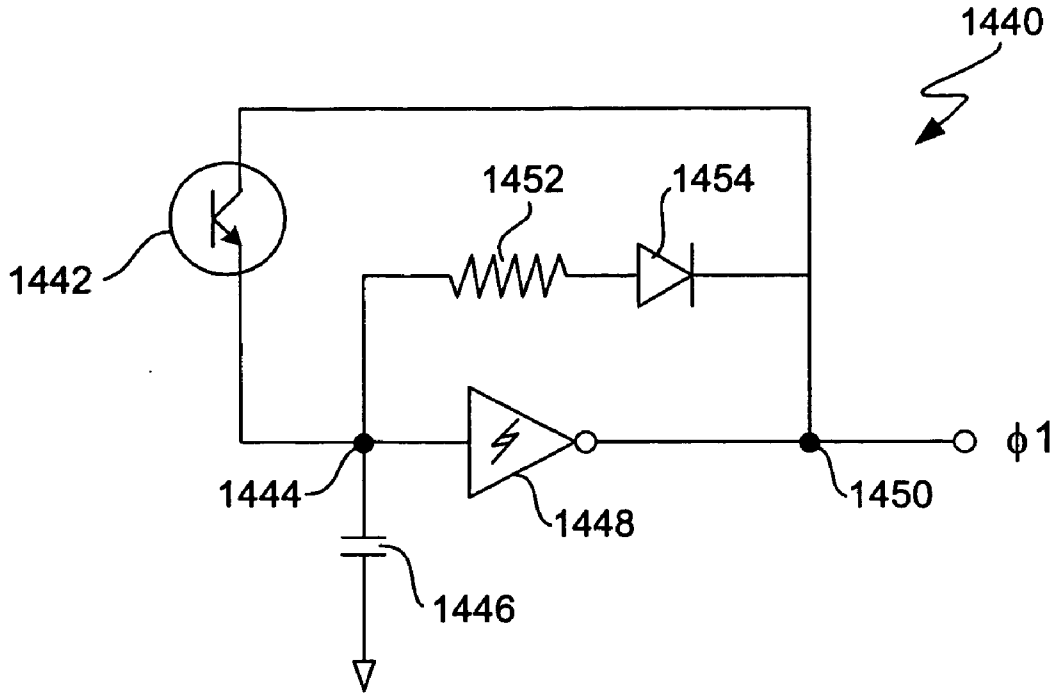

FIG. 14C

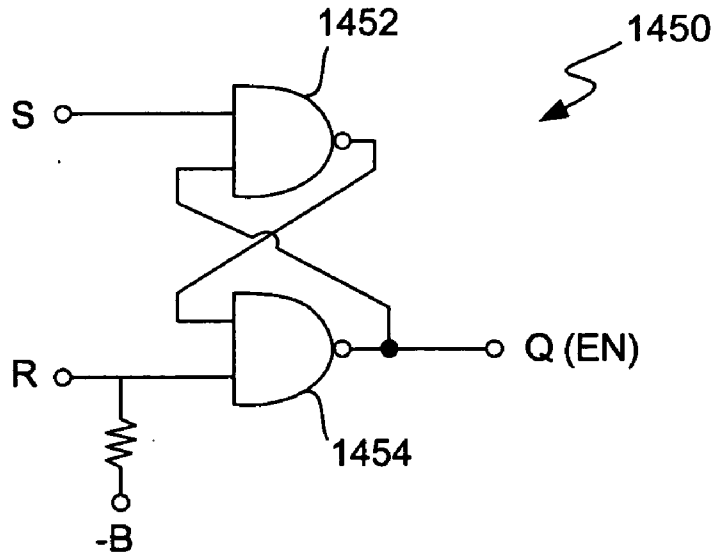

FIG. 14D

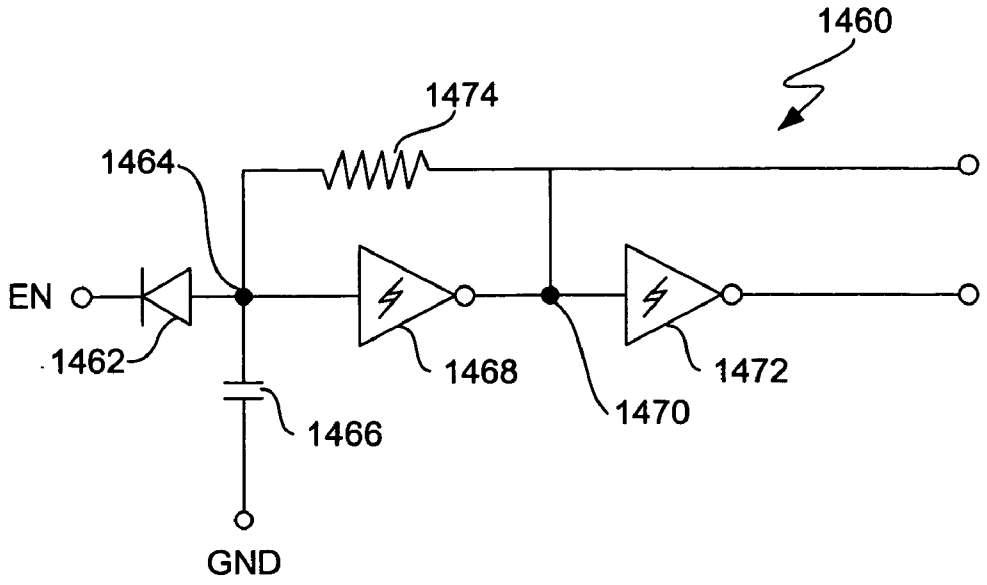

FIG. 14E

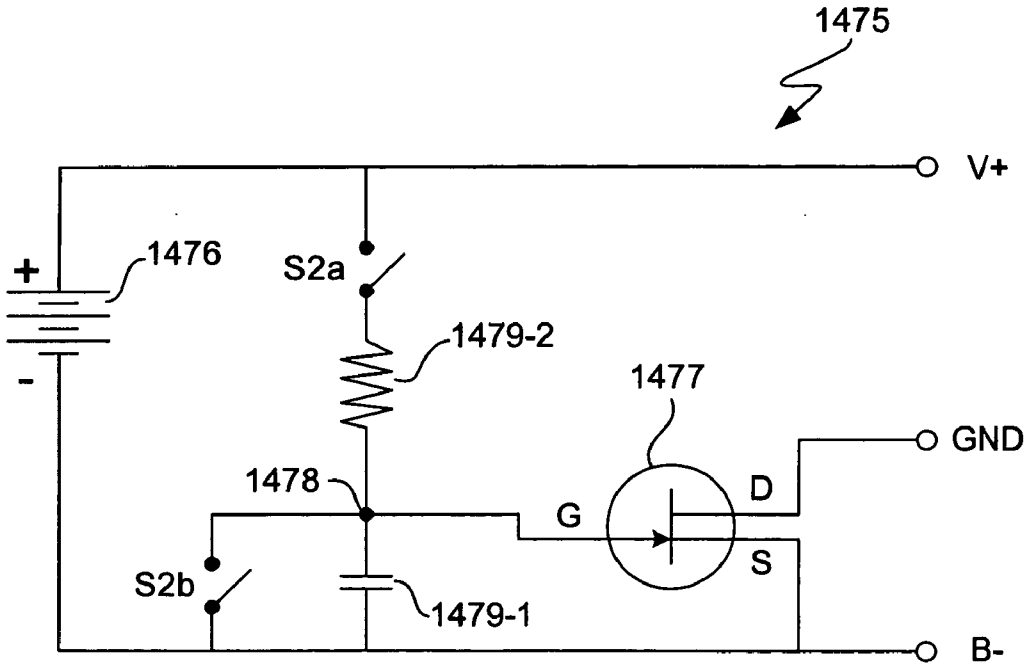

FIG. 14F

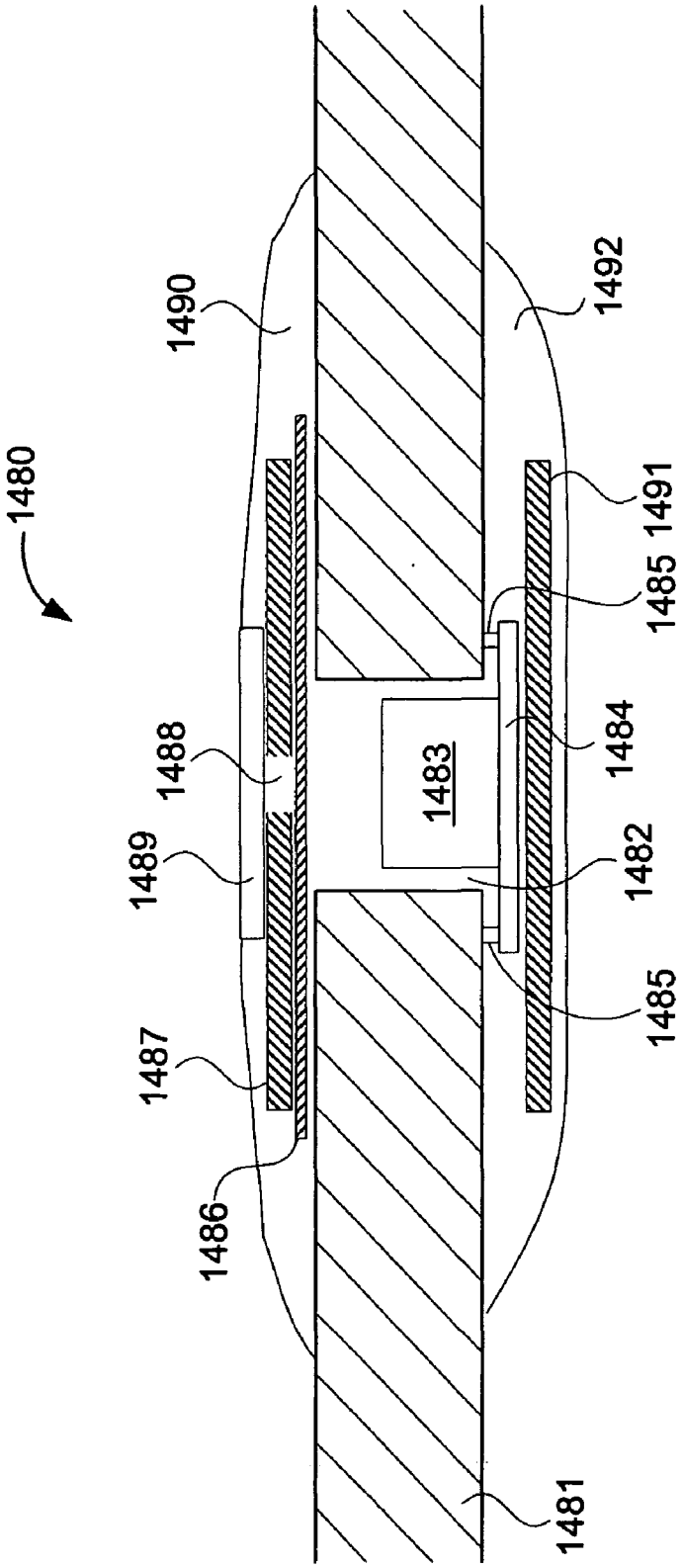
1480
1490
1492
1491
1485
1484
1483
1482
1485
1488
1489
1487
1486
1481

FIG. 14G

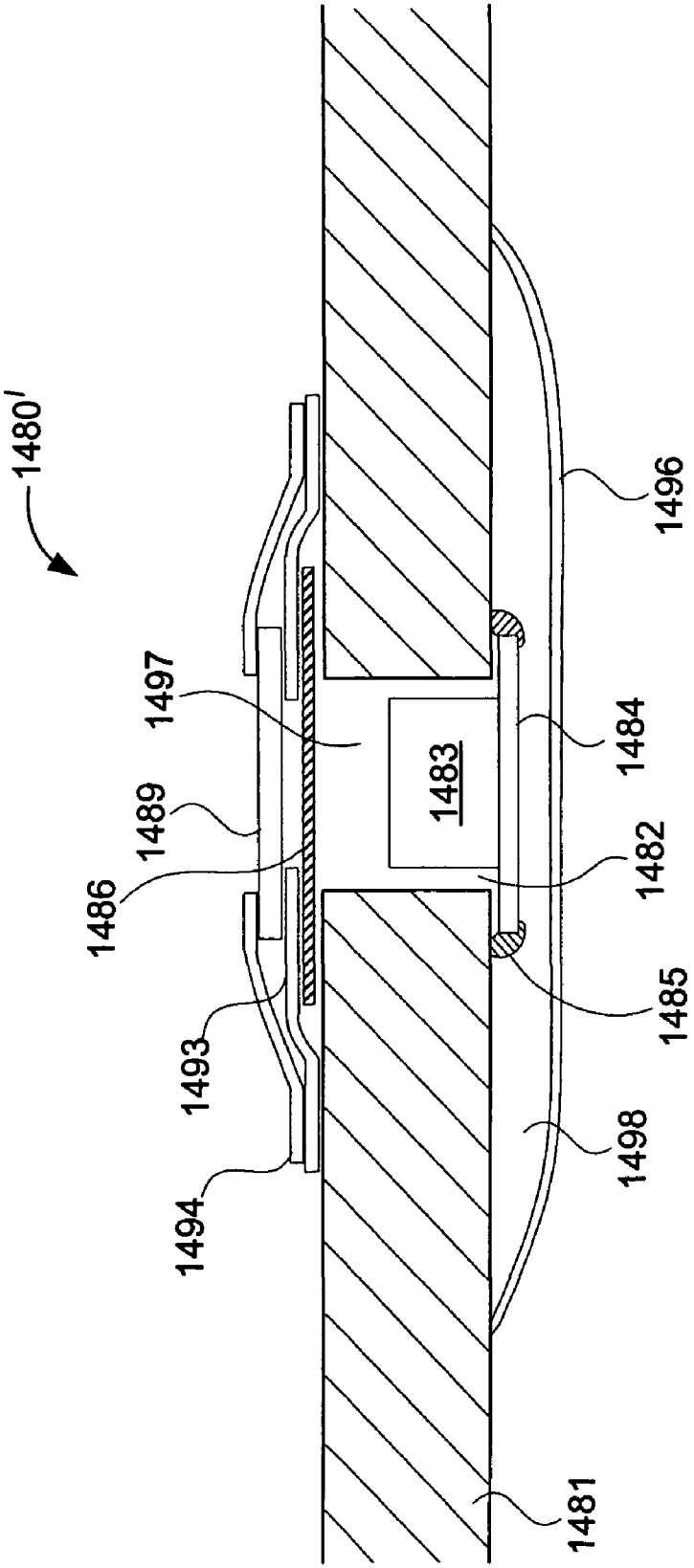
1480'
1497
1489
1486
1493
1494
1483
1484
1482
1485
1496
1498
1481

FIG. 14H

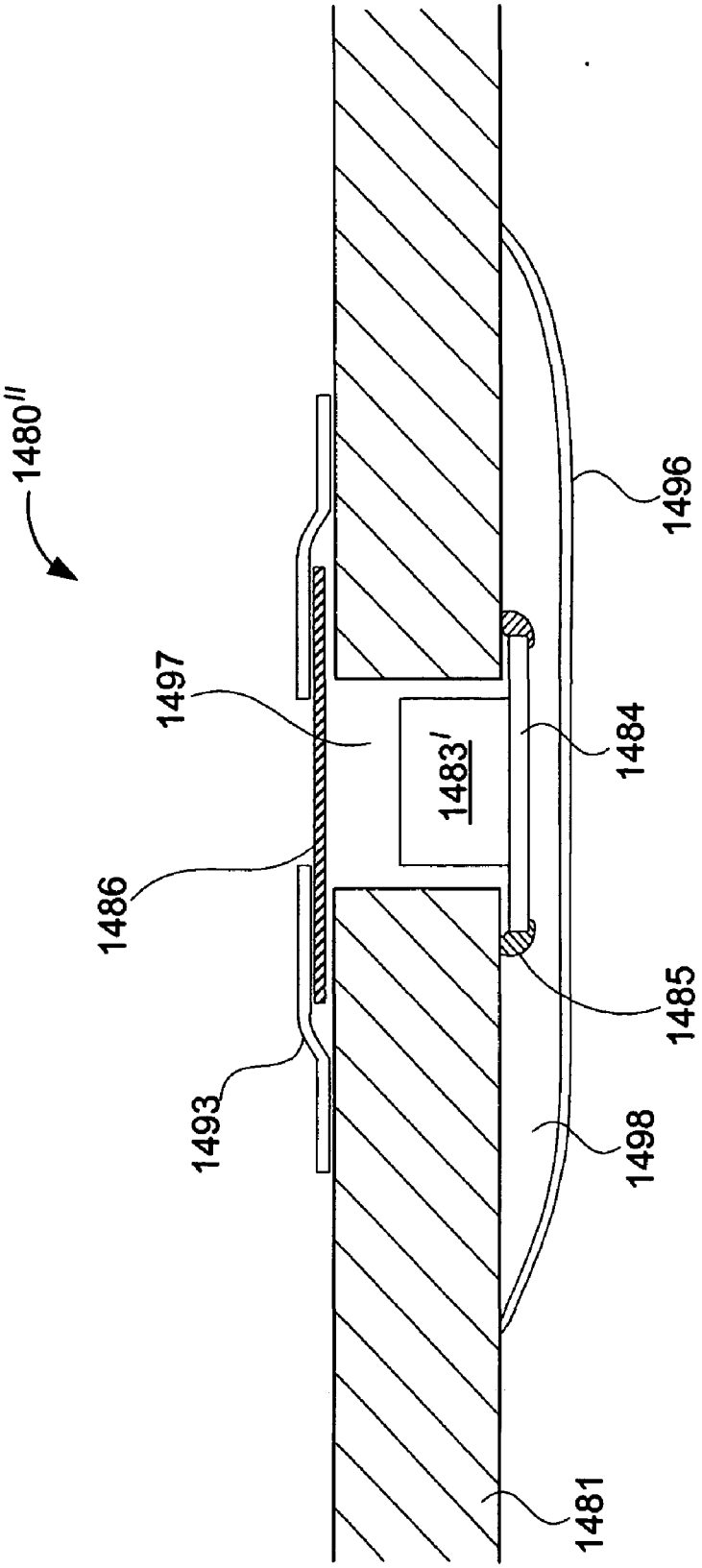

FIG. 14I

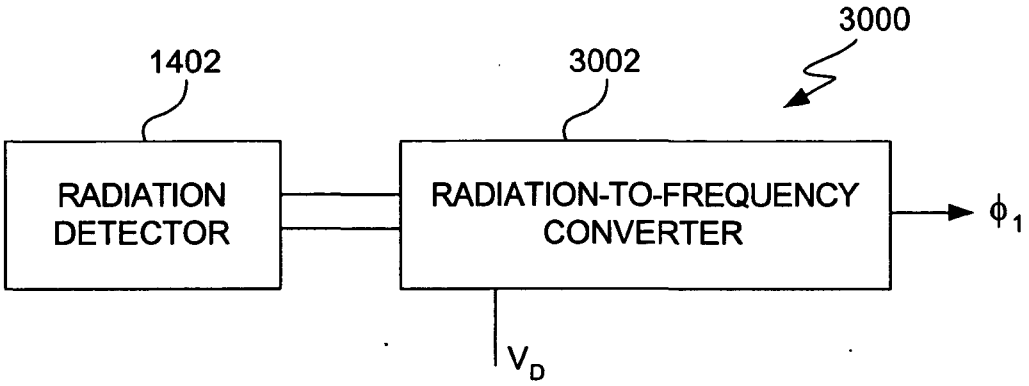

FIG. 14J

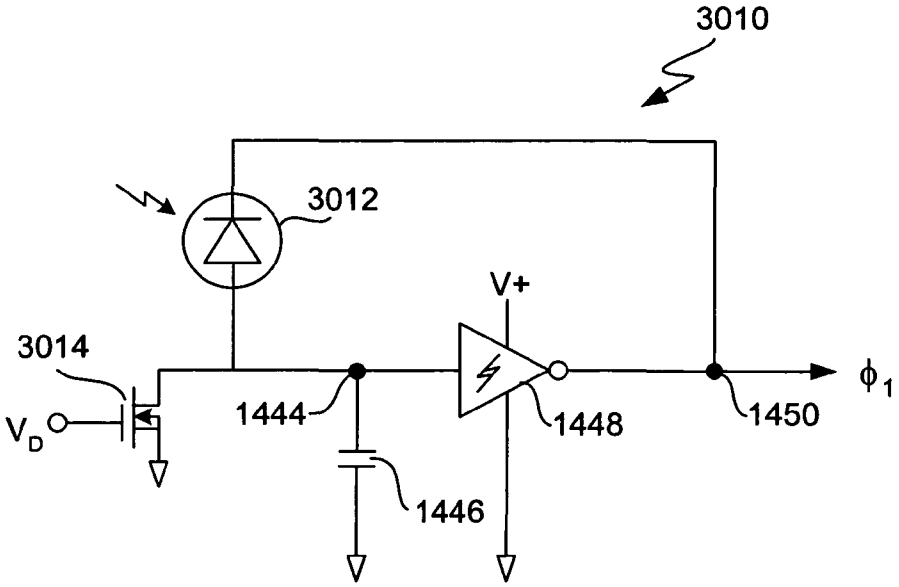

FIG. 14K

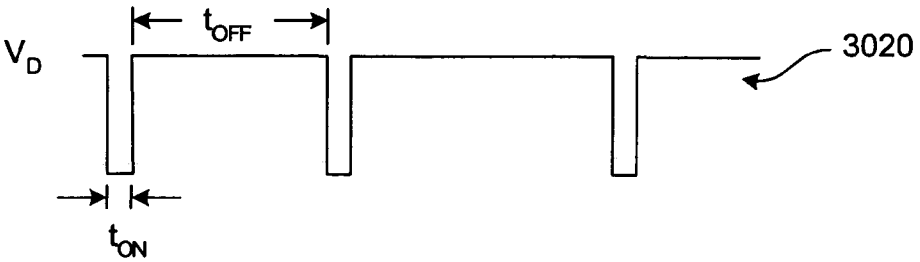

FIG. 14L

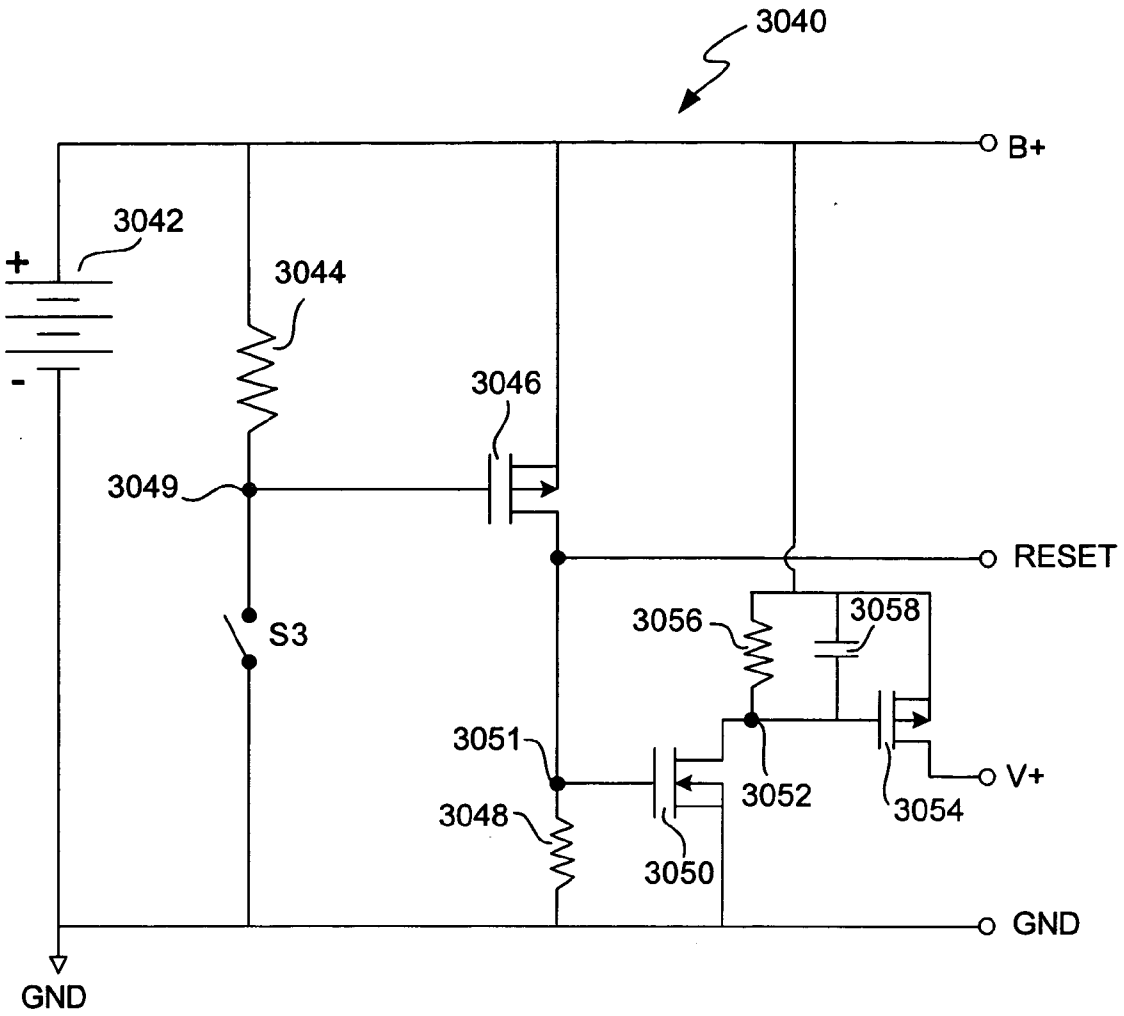
3040
B+
3042
+
-
3044
3046
3049
RESET
S3
3056
3058
3051
3052
V+
3054
3048
3050
GND
GND

FIG. 14M

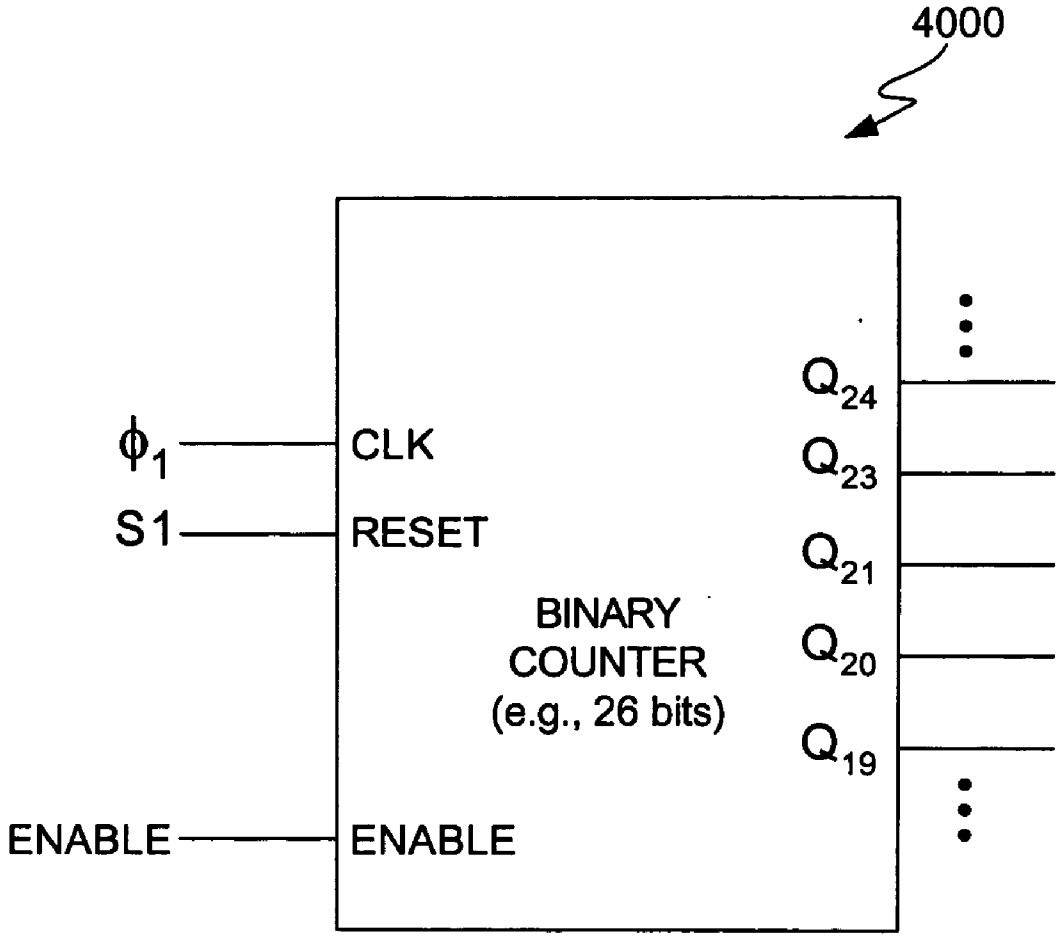
4000
ϕ_1
S1
ENABLE
CLK
RESET
ENABLE
BINARY
COUNTER
(e.g., 26 bits)
Q_{24}
Q_{23}
Q_{21}
Q_{20}
Q_{19}

FIG. 14N

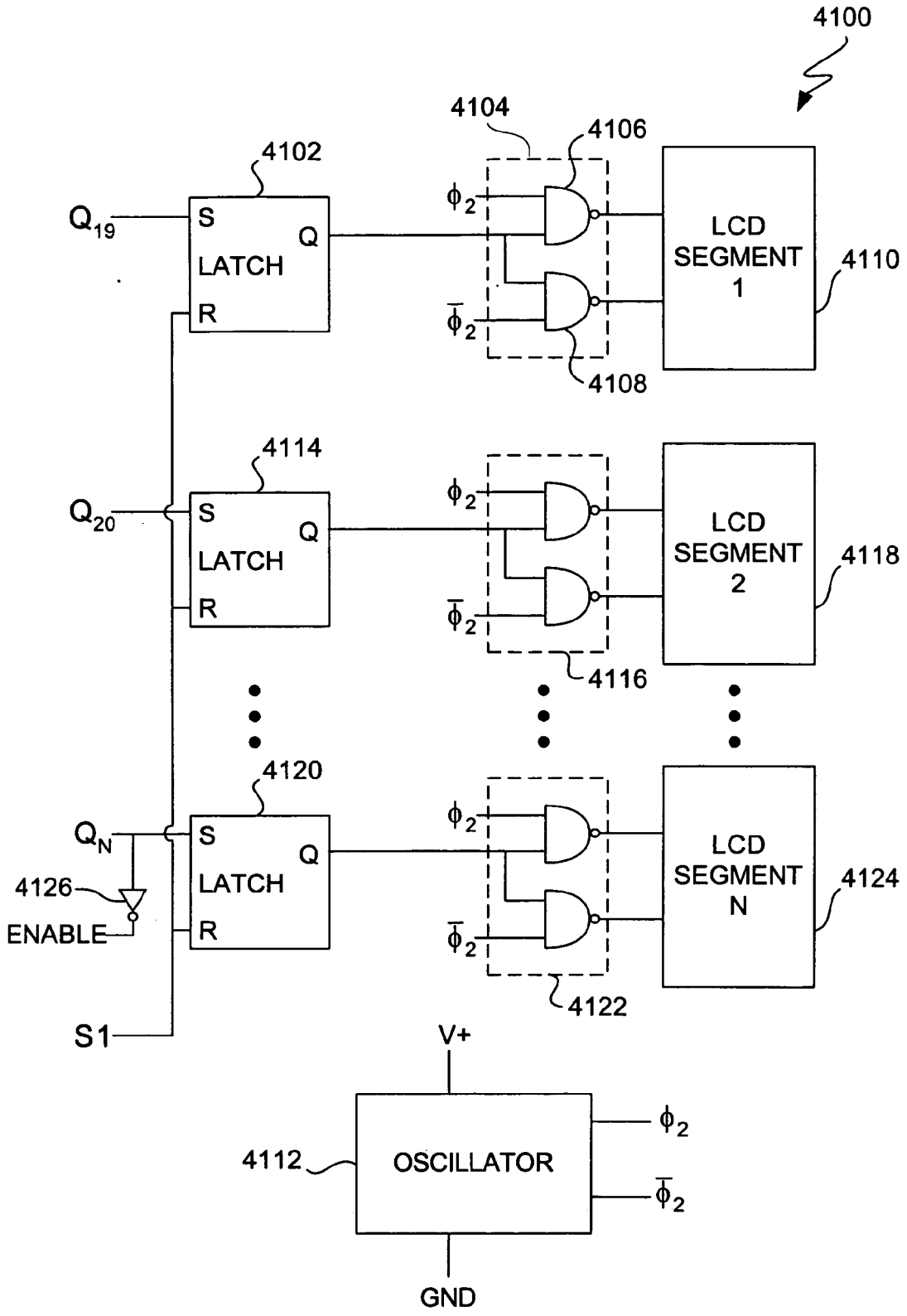
4100
4104
4106
4102
Q_{19}
S
Q
LATCH
R
ϕ_2
$\overline{\phi}_2$
LCD SEGMENT 1
4110
4108
4114
Q_{20}
S
Q
LATCH
R
ϕ_2
$\overline{\phi}_2$
LCD SEGMENT 2
4118
4116
4120
Q_N
S
Q
LATCH
R
4126
ENABLE
ϕ_2
$\overline{\phi}_2$
LCD SEGMENT N
4124
4122
S1
V+
4112
OSCILLATOR
ϕ_2
$\overline{\phi}_2$
GND

FIG. 14O

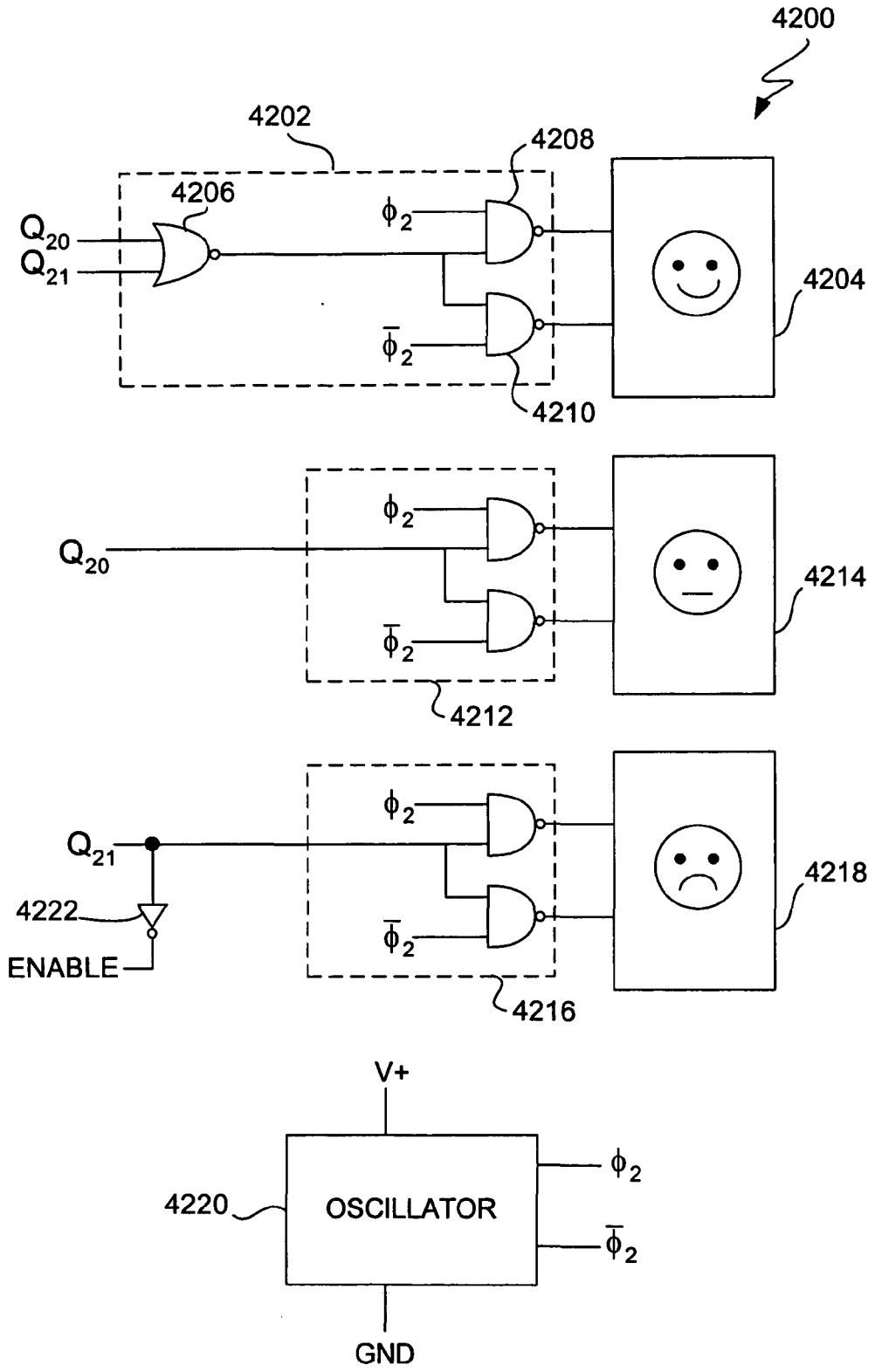
4200
4202
4208
4206
Q_{20}
Q_{21}
ϕ_2
$\overline{\phi}_2$
4204
4210
Q_{20}
ϕ_2
$\overline{\phi}_2$
4214
4212
Q_{21}
4222
ENABLE
ϕ_2
$\overline{\phi}_2$
4218
4216
V+
4220
OSCILLATOR
ϕ_2
$\overline{\phi}_2$
GND

FIG. 14P

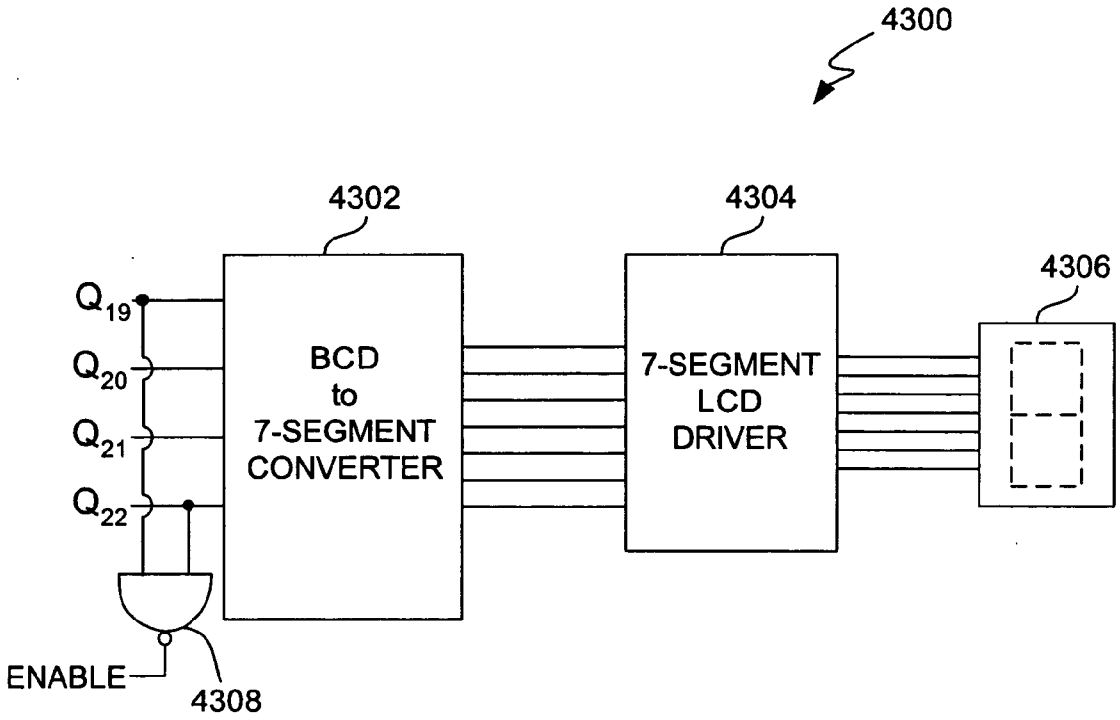
4300
4302
4304
4306
Q_{19}
Q_{20}
Q_{21}
Q_{22}
BCD
to
7-SEGMENT
CONVERTER
7-SEGMENT
LCD
DRIVER
ENABLE
4308

FIG. 14Q

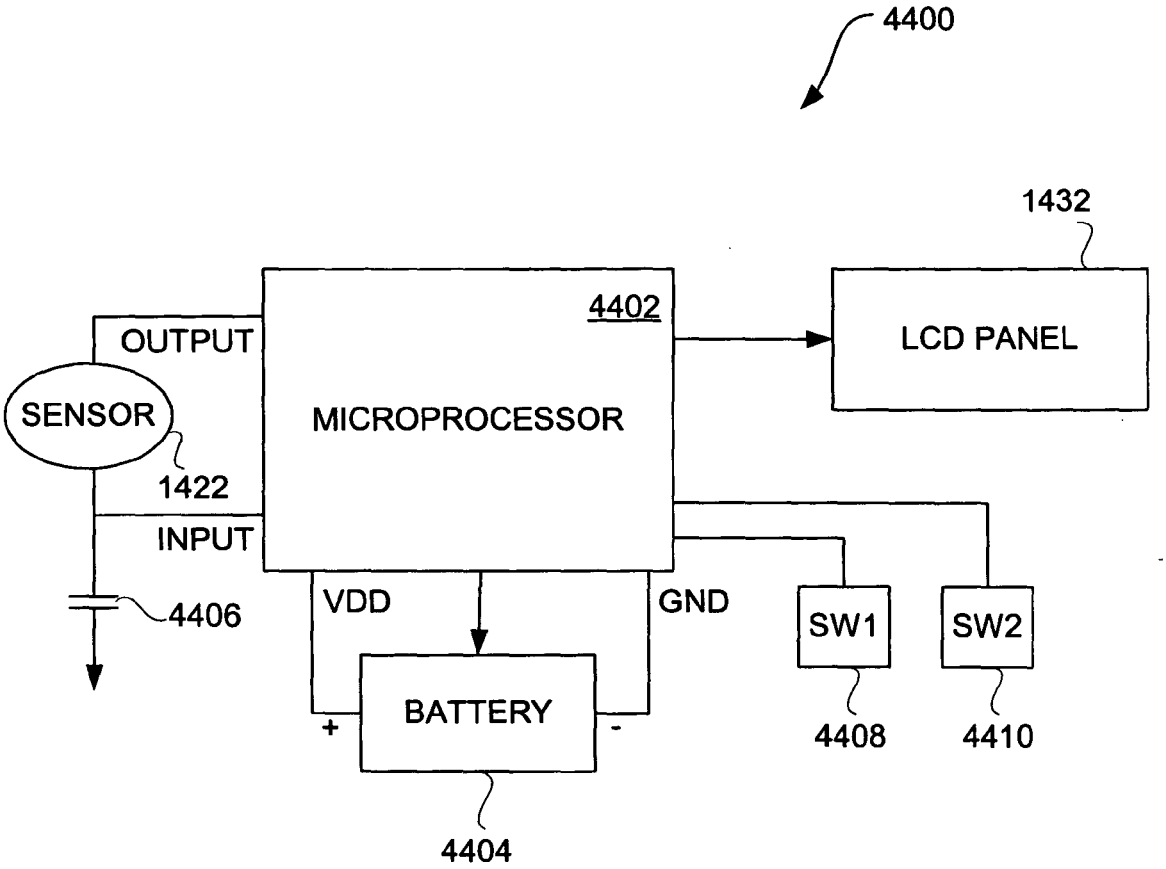
4400
1432
4402
OUTPUT
LCD PANEL
SENSOR
MICROPROCESSOR
1422
INPUT
4406
VDD
GND
SW1
SW2
BATTERY
+
-
4408
4410
4404

FIG. 14R

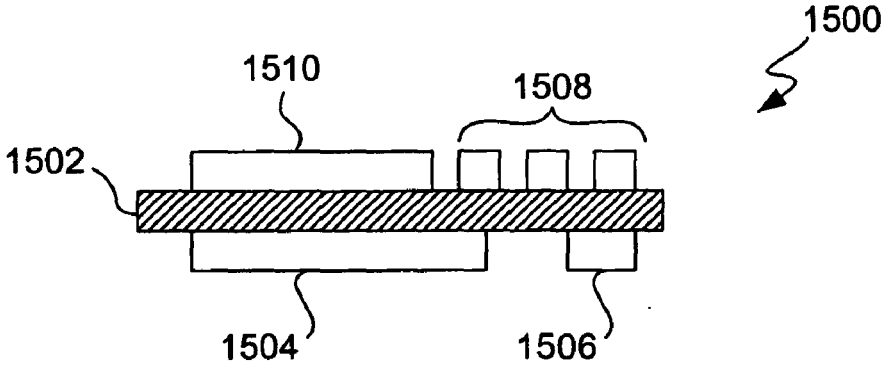

FIG. 15A

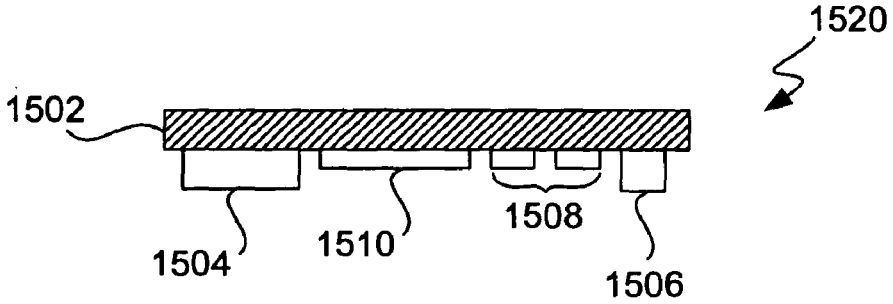

FIG. 15B

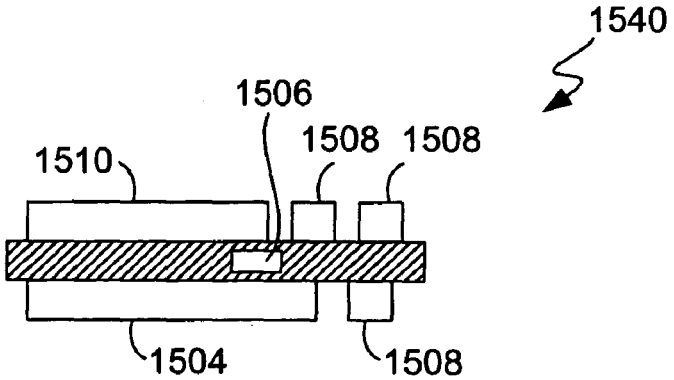

FIG. 15C

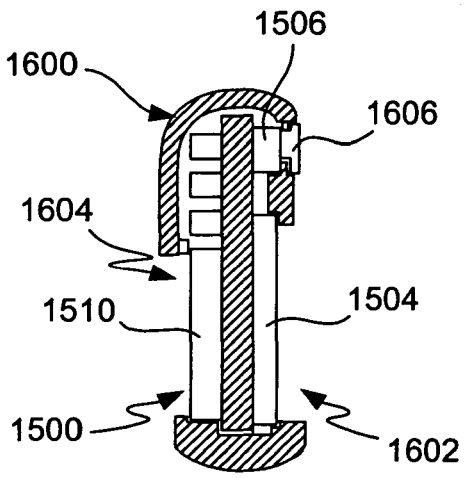

FIG. 16A

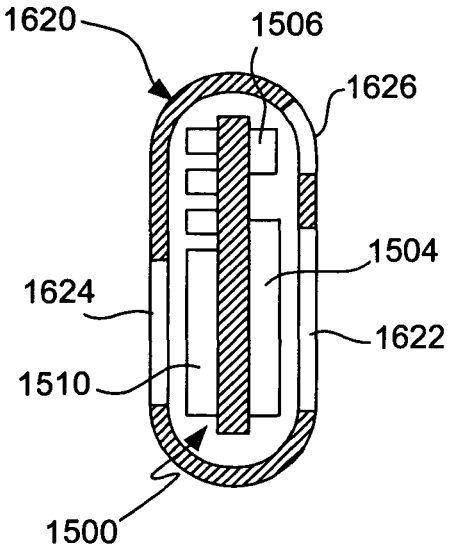

FIG. 16B

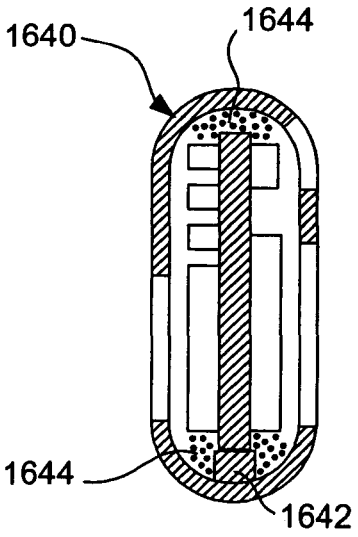

FIG. 16C

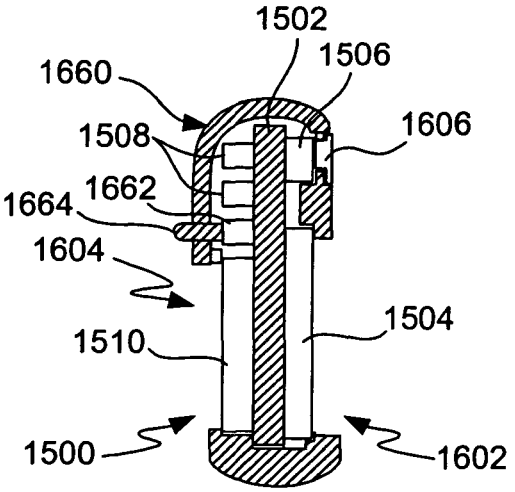

FIG. 16D

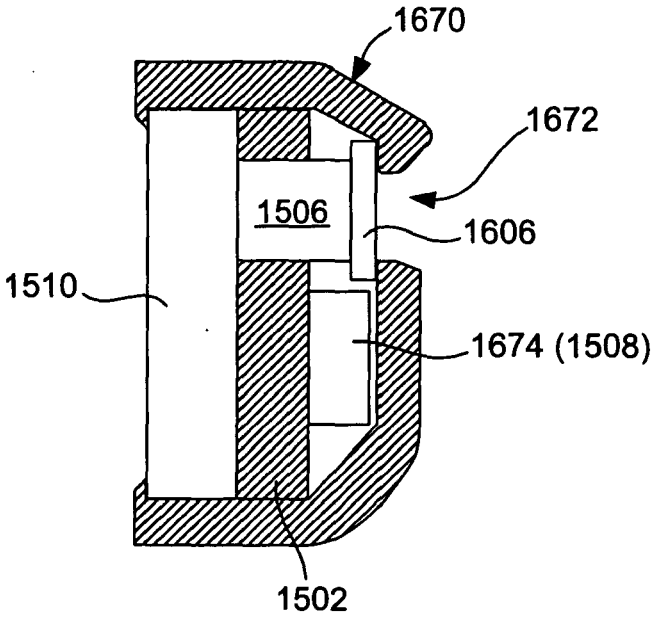

FIG. 16E

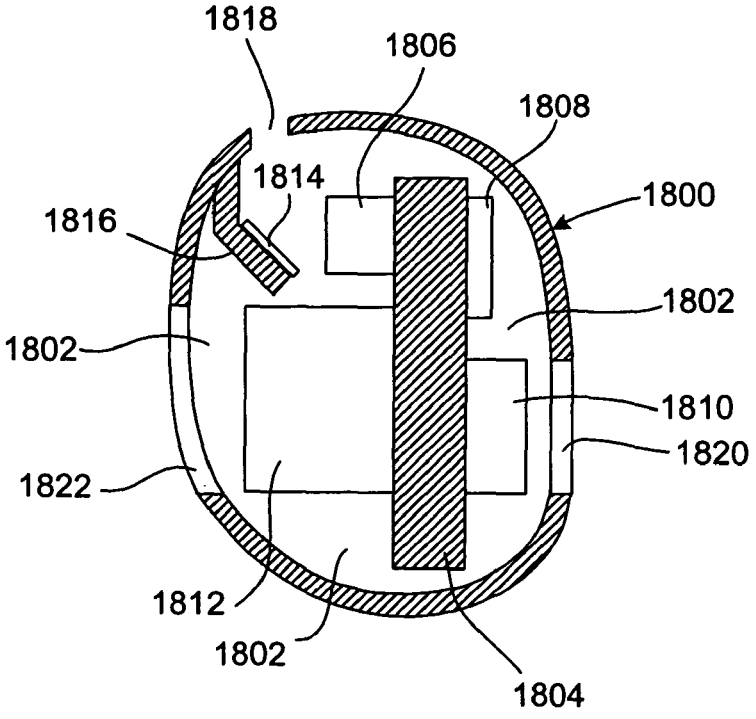

FIG. 18

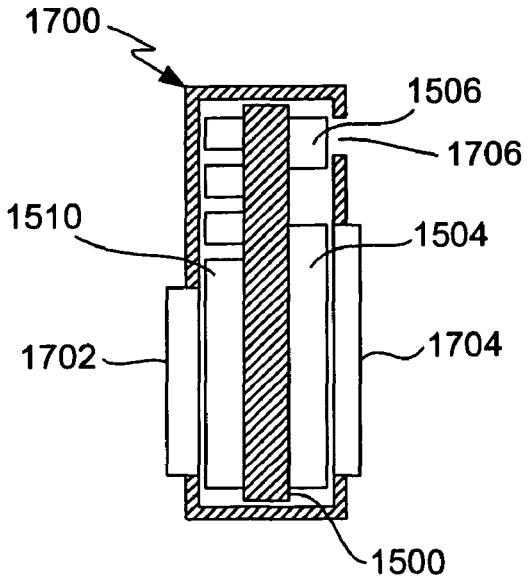

FIG. 17A

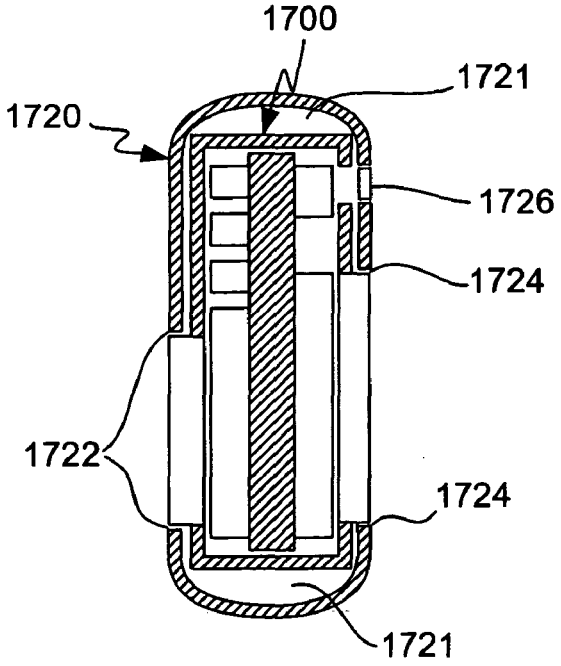

FIG. 17B

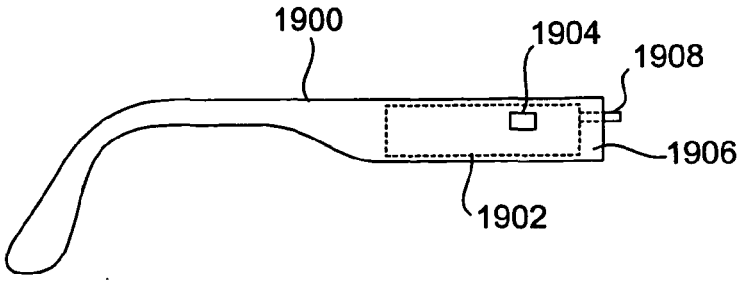

FIG. 19

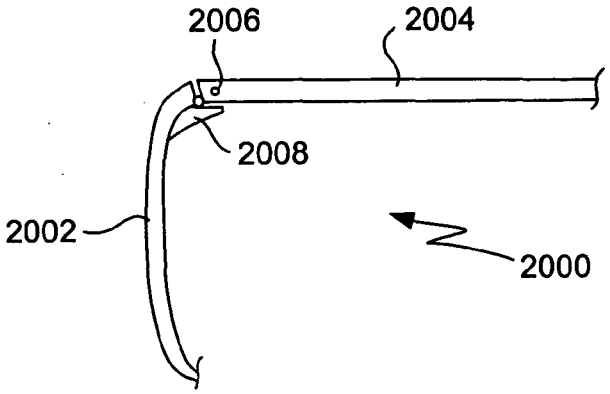

FIG. 20A

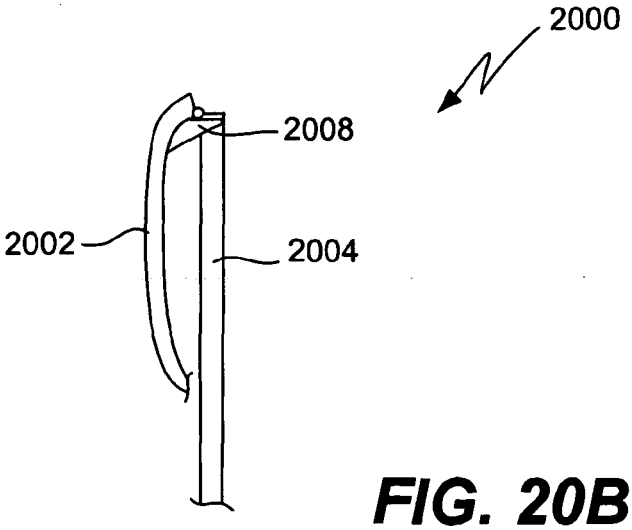

FIG. 20B

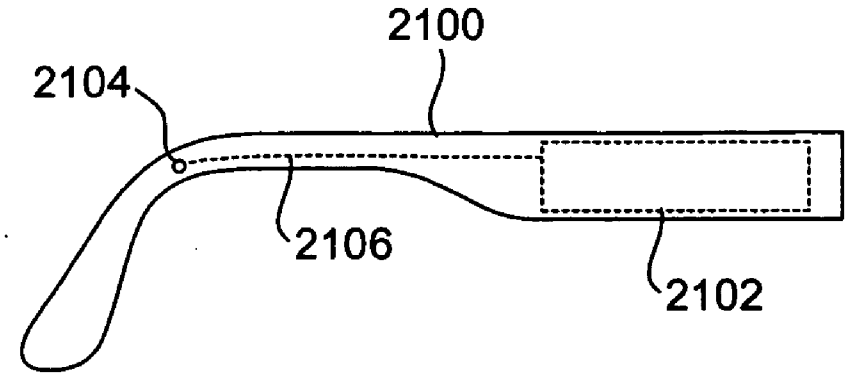

FIG. 21

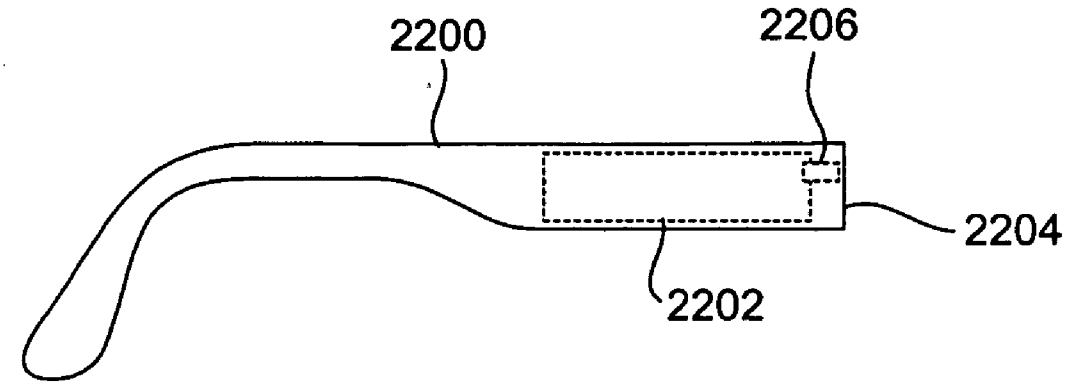

FIG. 22

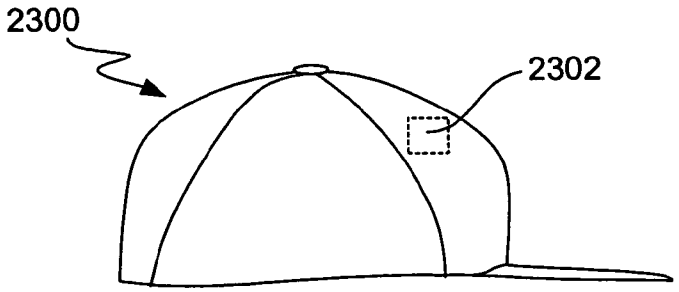

FIG. 23A

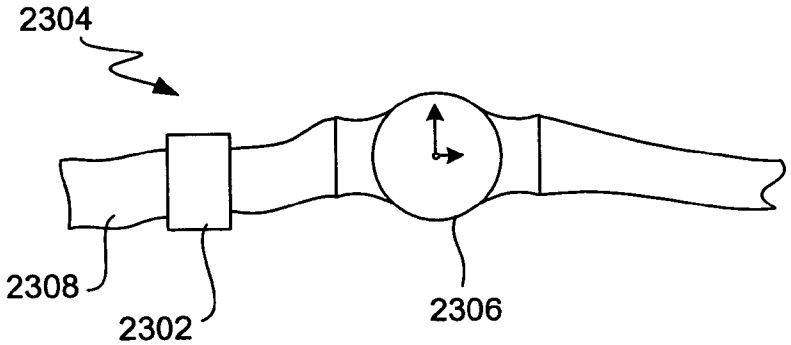

FIG. 23B

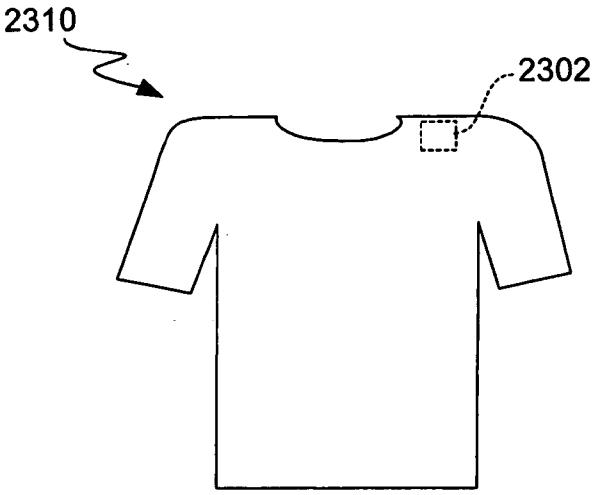

FIG. 23C

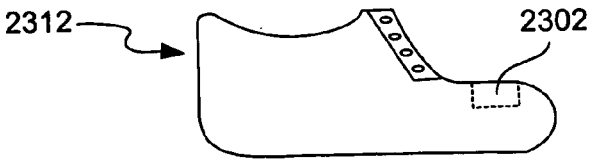

FIG. 23D

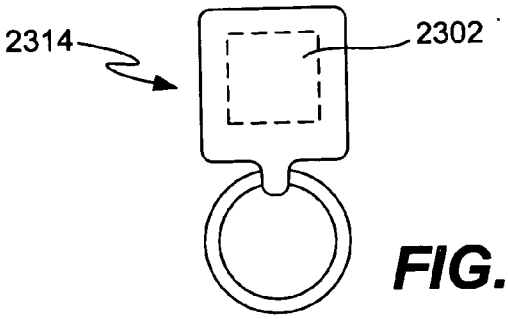

FIG. 23E

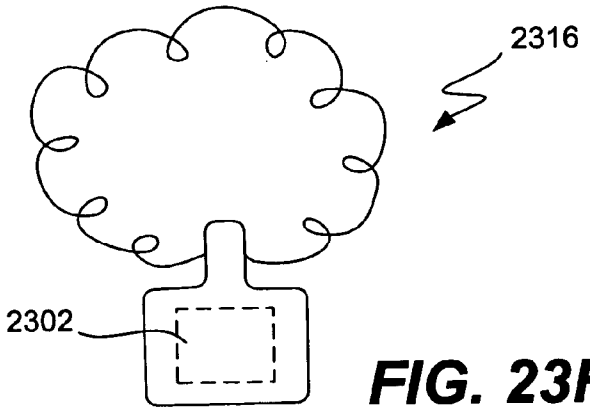

FIG. 23F

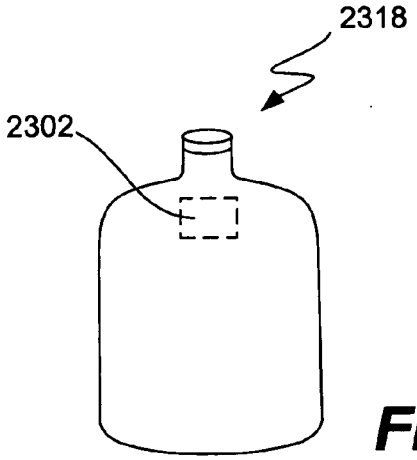

FIG. 23G

RADIATION MONITORING SYSTEM

CROSS-REFERENCE TO RELATED APPLICATIONS

[0001] The application claims priority to: (i) U.S. Provisional Patent Application No. 60/562,798, filed Apr. 15, 2004, entitled "EYEWEAR WITH ULTRAVIOLET DETECTION SYSTEM," and which is hereby incorporated herein by reference; (ii) U.S. Provisional Patent Application No. 60/583,169, filed Jun. 26, 2004, entitled "ELECTRICAL COMPONENTS FOR USE WITH EYEWEAR, AND METHODS THEREFOR," and which is hereby incorporated herein by reference; (iii) U.S. Provisional Patent Application No. 60/592,045, filed Jul. 28, 2004, entitled "EYEGLASSES WITH A CLOCK OR OTHER ELECTRICAL COMPONENT," and which is hereby incorporated herein by reference; (iv) U.S. Provisional Patent Application No. 60/605,191, filed Aug. 28, 2004, entitled "ELECTRICAL COMPONENTS FOR USE WITH EYEWEAR, AND METHODS THEREFOR," and which is hereby incorporated herein by reference; (v) U.S. Provisional Patent Application No. 60/618,107, filed Oct. 12, 2004, and entitled "TETHERED ELECTRICAL COMPONENTS FOR EYEGLASSES," which is hereby incorporated herein by reference; (vi) U.S. Provisional Patent Application No. 60/620,238, filed Oct. 18, 2004, entitled "EYEGLASSES WITH HEARING ENHANCED AND OTHER AUDIO SIGNAL-GENERATING CAPABILITIES," and which is hereby incorporated herein by reference; (vii) U.S. Provisional Patent Application No. 60/647,836, filed Jan. 31, 2005, and entitled "EYEGLASSES WITH HEART RATE MONITOR," which is hereby incorporated herein by reference; and (viii) U.S. Provisional Patent Application No. 60/647,826, filed Jan. 31, 2005, and entitled "EYEWEAR WITH ELECTRICAL COMPONENTS," which is hereby incorporated herein by reference.

[0002] In addition, this application is related to: (i) U.S. patent application Ser. No. 10/822,218, filed Apr. 12, 2004, and entitled "EYEGLASSES FOR WIRELESS COMMUNICATIONS," which is hereby incorporated herein by reference; (ii) U.S. patent application Ser. No. 10/964,011, filed Oct. 12, 2004, and entitled "TETHERED ELECTRICAL COMPONENTS FOR EYEGLASSES," which is hereby incorporated herein by reference; (iii) U.S. patent application Ser. No. 11/006,343, filed Dec. 7, 2004, and entitled "ADAPTABLE COMMUNICATION TECHNIQUES FOR ELECTRONIC DEVICES," which is hereby incorporated herein by reference; and (iv) U.S. patent application No. 11/_____, filed concurrently herewith, and entitled "EYEWEAR WITH RADIATION DETECTION SYSTEM," which is hereby incorporated herein by reference.

BACKGROUND OF THE INVENTION

[0003] It is common for people to be exposed to various types of radiation. Often excessive exposure to radiation can be hazardous to one's health. One type of radiation that frequently raises a health concern is ultraviolet (UV) radiation. UV radiation is subdivided into three types: UV-A, UV-B, and UV-C. UV-C radiation has wavelengths in the range of 200 to 285 nanometers (nm) and is totally absorbed by the earth's atmosphere. UV-B, from about 285 to 318 nm, is known to cause skin cancer in humans. UV-A, from about 315 to 400 nm, is mostly responsible for tanning. However, UV-A has also been found to play some role in skin cancer and is the cause of eye cataracts, solar retinitis, and corneal dystrophies.

[0004] Although several UV radiation measuring and warning instruments have been developed and made commercially available, these instruments are disadvantageous for various reasons. One disadvantage is that the instruments are often a stand alone, special purpose device. As a result, a user must separately wear the special purpose device, which can be intrusive and often inconvenient. Another disadvantage is that those instruments, even if separate but attachable to other devices, hinder or impede the design for the devices.

[0005] Thus, there is a need for improved approaches to measure and inform persons of UV radiation levels.

SUMMARY OF THE INVENTION

[0006] In one embodiment, an electronic circuit having radiation monitoring capability. Radiation, such as ultraviolet (UV) radiation, infrared (IR) radiation or light, can be measured by the electronic circuit. The measured radiation can then be used in providing radiation-related information to a user of the electronic circuit.

[0007] In one embodiment, all components for monitoring radiation can be integrated with eyewear, such as a frame (e.g., a temple of the frame) of the eyewear. Since any of the components provided can be integrated with the eyewear, the disturbance to design features of the eyewear can be reduced. As an example, the eyewear normally includes a pair of temples, and the components for monitoring radiation can be embedded within one or both of the temples. In one implementation, all components for monitoring radiation are integrated into a temple of the frame of the eyewear. As an example, these components can be formed together on a substrate as a module.

[0008] In one embodiment, the eyewear includes a detector, electrical circuitry and an output device. The eyewear can also include one or both of a battery and a solar cell to provide power to the electrical circuitry and possibly other components. Further, the eyewear can also include one or more additional sensors. Still further, the eyewear can also include communication capabilities.

[0009] The invention can be implemented in numerous ways, including as a system, device, apparatus, and method. Several embodiments of the invention are discussed below.

[0010] As an electronic circuit for monitoring radiation, one embodiment of the invention includes at least: a radiation detector that detects an intensity of at least one type of radiation; a radiation accumulator that receives and accumulates the detected intensity from the radiation detector; a comparator that determines whether the accumulated intensity exceeds at least one threshold level; and an output device that indicates whether the accumulated intensity exceeds the at least one threshold level.

[0011] As an electronic circuit for monitoring radiation, another embodiment of the invention includes at least: a radiation detector that detects an intensity of a type of radiation; a radiation-to-frequency converter that receives the detected intensity and converts the detected intensity to a frequency signal, the frequency signal having a frequency

that is dependent on the detected intensity; an output manager operatively connected to the radiation-to-frequency converter, the output manager being configured to determine whether to output an output indication based on the frequency signal; and an output device that outputs the output indication.

[0012] As an electronic circuit for monitoring radiation, still another embodiment of the invention includes at least: a radiation detector that detects an intensity of a type of radiation; a radiation-to-pulse-width converter that receives the detected intensity from the radiation detector and converts the detected intensity to a radiation signal, the radiation signal having a pulse-width that is dependent on the detected intensity; an output manager operatively connected to the radiation-to-pulse-width converter, the output manager being configured to determine whether to output an output indication based on the pulse-width of the radiation signal; and an output device that is configured for outputting the output indication.

[0013] Other aspects and advantages of the invention will become apparent from the following detailed description taken in conjunction with the accompanying drawings which illustrate, by way of example, the principles of the invention.

BRIEF DESCRIPTION OF THE DRAWINGS

[0014] The invention will be readily understood by the following detailed description in conjunction with the accompanying drawings, wherein like reference numerals designate like structural elements, and in which:

[0015] **FIG. 1** is a perspective view of UV monitoring glasses according to one embodiment of the invention.

[0016] **FIGS. 2A and 2B** are diagrams of a circuit board according to one embodiment of the invention.

[0017] **FIG. 3** is a block diagram of a UV monitoring system according to one embodiment of the invention.

[0018] **FIG. 4A** is a block diagram of a UV monitoring system according to another embodiment of the invention.

[0019] **FIG. 4B** is a block diagram of a UV monitoring system according to still another embodiment of the invention.

[0020] **FIG. 4C** is a block diagram of a UV monitoring system according to yet another embodiment of the invention.

[0021] **FIG. 4D** is a block diagram of a UV monitoring system according to yet another embodiment of the invention.

[0022] **FIG. 5** is a chart that depicts examples of auxiliary sensors that can be utilized as the one or more auxiliary sensors shown in **FIGS. 4A-4D**.

[0023] **FIG. 6** is a block diagram of a UV monitoring system according to one embodiment of the invention.

[0024] **FIG. 7A** is a schematic diagram of a UV monitoring circuit according to one embodiment of the invention.

[0025] **FIG. 7B** is a schematic diagram of a UV monitoring circuit according to another embodiment of the invention.

[0026] **FIG. 7C** is a schematic diagram of a UV monitoring circuit according to yet another embodiment of the invention.

[0027] **FIG. 7D** is a schematic diagram of a UV monitoring circuit according to still yet another embodiment of the invention.

[0028] **FIG. 8** is a flow diagram of a UV monitoring process according to one embodiment of the invention.

[0029] **FIG. 9** is a flow diagram of a UV monitoring process according to another embodiment of the invention.

[0030] **FIG. 10** is a flow diagram of a UV monitoring process according to yet another embodiment of the invention.

[0031] **FIG. 11** is a flow diagram of a UV monitoring process according to still yet another embodiment of the invention.

[0032] **FIG. 12** is a block diagram of electronic circuitry according to one embodiment of the invention.

[0033] **FIG. 13A** is a schematic diagram of an electronic circuit for a UV detection system according to one embodiment of the invention.

[0034] **FIG. 13B** is a schematic diagram of a periodic supply voltage circuit according to one embodiment of the invention.

[0035] **FIG. 14A** is a block diagram of a radiation monitoring system according to one embodiment of the invention.

[0036] **FIG. 14B** is a block diagram of a radiation monitoring system according to another embodiment of the invention.

[0037] **FIG. 14C** is a schematic diagram of a radiation-to-frequency converter according to one embodiment of the invention.

[0038] **FIG. 14D** is a schematic diagram of a latch according to one embodiment of the invention.

[0039] **FIG. 14E** is a schematic diagram of a LCD driver according to one embodiment of the invention.

[0040] **FIG. 14F** is a schematic diagram of a power supply according to one embodiment of the invention.

[0041] **FIG. 14G** is a cross-sectional view of a UV detector arrangement according to one embodiment of the invention.

[0042] **FIG. 14H** is a cross-sectional view of a UV detector arrangement according to one embodiment of the invention.

[0043] **FIG. 14I** is a cross-sectional view of a UV detector arrangement according to one embodiment of the invention.

[0044] **FIG. 14J** is a partial block diagram of a radiation monitoring system according to one embodiment of the invention.

[0045] **FIG. 14K** is a schematic diagram of a radiation-to-frequency converter and a sensor according to one embodiment of the invention.

[0046] **FIG. 14L** is a diagram of a representative waveform of a low duty cycle signal V_D.

[0047] **FIG. 14M** is a schematic diagram of a power supply another according to one embodiment of the invention.

[0048] **FIG. 14N** is a diagram of a binary counter according to one embodiment of the invention.

[0049] **FIG. 14O** is a block diagram of latch-driver circuitry according to one embodiment of the invention.

[0050] **FIG. 14P** is a block diagram of driver circuitry according to one embodiment of the invention.

[0051] **FIG. 14Q** is a block diagram of driver circuitry according to another embodiment of the invention.

[0052] **FIG. 14R** is a block diagram of a radiation monitoring system according to another embodiment of the invention.

[0053] **FIGS. 15A-15C** are cross-sectional diagrams of a radiation detection systems according to different embodiments of the invention.

[0054] **FIG. 16A** is a cross-sectional view of an eyewear housing containing a radiation detection system according to one embodiment of the invention.

[0055] **FIG. 16B** is a cross-sectional view of an eyewear housing containing a radiation detection system according to another embodiment of the invention.

[0056] **FIG. 16C** is a cross-sectional view of an eyewear housing containing a radiation detection system according to still another embodiment of the invention.

[0057] **FIG. 16D** is a cross-sectional view of an eyewear housing containing a UV detection system according to yet still embodiment of the invention.

[0058] **FIG. 16E** is a cross-sectional view of an eyewear housing containing a radiation monitoring system according to one embodiment of the invention.

[0059] **FIG. 17A** is a cross-sectional view of a module housing according to one embodiment of the invention.

[0060] **FIG. 17B** is a cross-sectional view of an eyewear housing according to one embodiment of the invention.

[0061] **FIG. 18** is a cross-sectional view of an eyewear housing having a reflective-type filter according to one embodiment of the invention.

[0062] **FIG. 19** is a side view of a temple for an eyeglass frame according to one embodiment of the invention.

[0063] **FIGS. 20A and 20B** are top view diagrams of a portion of an eyeglass frame according to one embodiment of the invention.

[0064] **FIG. 21** is a side view of a temple for an eyeglass frame according to one embodiment of the invention.

[0065] **FIG. 22** is a side view of a temple for an eyeglass frame according to another embodiment of the invention.

[0066] **FIGS. 23A-23G** illustrate examples of various end products having radiation monitoring capability.

DETAILED DESCRIPTION OF THE INVENTION

[0067] In one embodiment, an electronic circuit having radiation monitoring capability. Radiation, such as ultraviolet (UV) radiation, infrared (IR) radiation or light, can be measured by the electronic circuit. The measured radiation can then be used in providing radiation-related information to a user of the electronic circuit.

[0068] In one embodiment, all components for monitoring radiation can be integrated with eyewear, such as a frame (e.g., a temple of the frame) of the eyewear. Since any of the components provided can be integrated with the eyewear, the disturbance to design features of the eyewear can be reduced. As an example, the eyewear normally includes a pair of temples, and the components for monitoring radiation can be embedded within one or both of the temples. In one implementation, all components for monitoring radiation are integrated into a temple of the frame of the eyewear. As an example, these components can be formed together on a substrate as a module.

[0069] In one embodiment, the eyewear includes a detector, electrical circuitry and an output device. The eyewear can also include one or both of a battery and a solar cell to provide power to the electrical circuitry and possibly other components. Further, the eyewear can also include one or more additional sensors. Still further, the eyewear can also include communication capabilities.

[0070] In another embodiment, some or all of the components for monitoring radiation can be partially or completely tethered to the eyewear. In still another embodiment, some or all of one or more auxiliary sensors used therewith could be partially or completely tethered to the eyewear. Tethering components allows for increased design freedom with the eyewear as well as additional area with which to house the components.

[0071] The eyewear can contain lenses, either vision corrective lenses or non-corrective lenses. Examples of eyewear using corrective lenses include, for example, prescription glasses, bi-focal glasses, reading glasses, driving glasses, and progressive glasses. Examples of eyewear, using corrective or non-corrective lenses, are sunglasses, fit-over glasses, safety glasses, sports glasses, swim masks or goggles and ski goggles. The eyewear can also include wrap-around glasses (with wrap-around lenses), fit-over glasses, or auxiliary frames (which attach to existing frames). Still further, the eyewear can include a strap for glasses, such as a strap to hold glasses on one's head. The strap can include some or all of the components for monitoring radiation, such components can be attached or at least partially embedded in the strap.

[0072] Embodiments of the invention are discussed below with reference to **FIGS. 1-23G**. However, those skilled in the art will readily appreciate that the detailed description given herein with respect to these figures is for explanatory purposes as the invention extends beyond these limited embodiments. Although much of the discussion below pertains to monitoring of UV radiation, it should be understood that the invention is also applicable to other types of radiation (infrared, x-rays, etc.).

[0073] **FIG. 1** is a perspective view of UV monitoring glasses **100** according to one embodiment of the invention.

The UV monitoring glasses **100** include a frame and a pair of lenses **102**. The frame has lens holders **104** that hold the lenses **102** in position. The frame also has a bridge **106**. The UV monitoring glasses **100** also include a pair of temples (or arms) **108**. The temples **108** are considered part of the frame. As shown in **FIG. 1**, each of the temples **108** is coupled to the frame by a hinge **109**. In one embodiment, the temples **108** can be removed from the frame. At least one of the temples **108** includes an internal cavity **110**. Within the internal cavity **110** is a circuit board **112**. The circuit board **112** can serve as a substrate. The circuit board **112** can have or couple to a solar cell **114** and UV detector **116** which are also at least primarily provided within the internal cavity **110**. The circuit board **112** could include a battery (not shown) in addition to or alternative to the solar cell **114**. The temple **108** having the cavity region **110** includes an opening **118** for the solar cell **114** (if provided) and an opening **120** for the UV detector **116**. In addition, the circuit board **112** can further include or couple to circuitry **122** and a display device **124**. For example, the display device **124** can be either a liquid-crystal display (LCD) or a Light-Emitting Diode (LED) display having one or more LED components, either of which can be controlled by the circuitry **122**. The solar cell **114** can receive light via the opening **118** so as to provide power to the circuit board **112**. The UV detector **116** can receive light via the opening **120**. The UV detector **116** is used to provide an indication of UV radiation. The indication of UV radiation detected by the UV detector **116** can be processed by the circuitry **122** to produce an output at the display device **124**.

[**0074**] **FIGS. 2A and 2B** are diagrams of the circuit board **112** according to one embodiment of the invention. In one embodiment, the circuit board includes at least one electronic component.

[**0075**] **FIG. 2A** shows a first side of the circuit board **112**. Typically, the first side would be positioned adjacent a top side or outer side of the temple **108**. As shown in **FIG. 2A**, the first side of the circuit board **112** has the solar cell **114** and the UV detector **116** attached thereto. The first side of the circuit board **112** should be exposed at least partially to external light (e.g., sunlight). Hence, the openings **118** and/or **120** of the temple **108** shown in **FIG. 1** can provide openings so that light can impinge upon the solar cell **114** and the UV detector **116**.

[**0076**] **FIG. 2B** shows a second side of the circuit board **112**. The second side of the circuit board **112** can be a bottom side or inner side of the temple **108**. As shown in **FIG. 2B**, the second side of the circuit board **112** can have the circuitry **122** and the display device **124** attached thereto. As previously noted, the display device **124** can be a LED or LCD display. As depicted in **FIG. 2B**, the display device **124** can be a multi-character display. Alternatively, the display device **124** can be a multi-color display, such as provided by a color LCD or a plurality of different color LEDs (e.g., a red LED, yellow LED and green LED). The display device **124** can also be a multi-symbol display. Although not shown in **FIG. 1**, the UV monitoring glasses **100** can further include an opening or transparent portion at the temple **108** proximate to the display device **124** so that an output from the display device **124** can be visible to a user of the UV monitoring glasses **100**.

[**0077**] **FIG. 3** is a block diagram of a UV monitoring system **300** according to one embodiment of the invention. The UV monitoring system **300** can be embedded within (i.e., internal to) the housing (i.e., frame) of a pair of glasses. Glasses refer to eyewear.

[**0078**] The UV monitoring system **300** includes electrical circuitry **302**. The electrical circuitry **302** can be one or more electrical components, such as integrated circuits, analog components, and/or digital components. One or more solar cells **304** provide power to the electrical circuitry **302**. In other words, when light impinges upon the one or more solar cells **304**, power is produced and supplied to the electrical circuitry **302**. The electrical circuitry **302** receives a UV level indication from a UV detector **306**. In one embodiment, the UV detector **306** includes a photodetector **305** and an optical filter **308**. The optical filter **308** can be integral with or positioned proximate to the photodetector **305** so that the optical filter **308** passes radiation associated with the ultraviolet wavelength range, and such radiation is supplied to the photodetector **305**. As a result, the UV level indication produced by the UV detector **306** is an indication of the UV radiation impinging upon glasses or the user thereof. The electrical circuitry **302** receives the UV level indication from the UV detector **306** and determines whether an output should be signaled by an output device **310**. The output device **310** can take a variety of different forms. For example, the output device **310** can be a display device, such as a LED or LCD display. A display device can produce a visual output. The output device **310** can also be a speaker or a vibration device. The speaker can produce an audio output. For example, the audio output can be a buzzing sound, a beep or a synthesized voice message.

[**0079**] **FIG. 4A** is a block diagram of a UV monitoring system **400** according to another embodiment of the invention. The UV monitoring system **400** includes the electrical circuitry **302**, the one or more solar cells **304**, the UV detector **306**, and the output device **310** shown in **FIG. 3**. In addition, the UV monitoring system **400** further includes or makes use of one or more auxiliary sensors **402**. The one or more auxiliary sensors **402** can provide additional sensor information to the electrical circuitry **302**. This additional sensor information can affect the output being provided at the output device **310**. For example, the additional sensor information could be used to provide additional output data or could be used to modify the output data associated with the UV level indication provided by the UV detector **306**.

[**0080**] **FIG. 4B** is a block diagram of a UV monitoring system **450** according to still another embodiment of the invention. The UV monitoring system **450** is generally similar to the UV monitoring system **400** shown in **FIG. 4**, but further includes or makes use of a "being worn" detector **452**. The UV monitoring system **450** can be embedded within (i.e., internal to) the housing (i.e., frame) of a pair of glasses. The "being worn" detector **452** would indicate whether the glasses are being worn by its user. For example, the "being worn" detector **452** can be performed using a thermal sensor, a motion detector, a stress sensor or a switch. Although the "being worn" detector **452** is shown separate from the auxiliary sensors **402**, it should be understood that the "being worn" detector **452** can be considered one type of auxiliary sensor.

[**0081**] **FIG. 4C** is a block diagram of a UV monitoring system **460** according to yet another embodiment of the invention. The UV monitoring system **460** is generally

similar to the UV monitoring system **400** shown in **FIG. 4A**, but further includes a photodetector **462**. Also, in this embodiment, the optical filter **308'** blocks UV light and passes other light through to the photodetector **305'**. As an example, the optical filter **308'** can be a thin sheet or coating of polycarbonate. In this embodiment, the photodetector **305'** provides an indication of non-UV light, and the photodetector **462** provides an indication of total light. The electrical circuitry **302'** receives the indication of non-UV light and the indication of total light. By subtracting the indication of non-UV light from the indication of total light, the electrical circuitry **302'** determines an indication of UV light. In one embodiment, the photodetectors **305'** and **462** can be Silicon (Si) photodetectors. The electrical circuitry **302'** determines whether an output should be signaled by an output device **310** based on the UV level indication. As previously noted, the output device **310** can take a variety of different forms.

[**0082**] **FIG. 4D** is a block diagram of a UV monitoring system **470** according to still yet another embodiment of the invention. The UV monitoring system **470** includes the electrical circuitry **302**, the one or more solar cells **304**, the UV detector **306** and the output device **310** shown in **FIG. 3**. In this embodiment, the UV detector **306** measures the UV level indication directly, without the need for an additional optical filter. For example, the UV detector **306** can be a Gallium Nitride (GaN) photodetector since such has a sensitivity to UV radiation. As another example, the UV detector **306** can be a Silicon Carbide (SiC) photodetector since such also has a sensitivity to UV radiation. Silicon Carbide (SiC) detectors may also be suitable for use to detect other types of radiation besides UV. The electrical circuitry **302** receives the UV level indication from the UV detector **306** and determines whether an output should be signaled by the output device **310**. As noted above, the output device **310** can take a variety of different forms.

[**0083**] The one or more auxiliary sensors **402** utilized in the UV monitoring system **400** shown in **FIGS. 4A-4D** can vary depending upon application. **FIG. 5** is a chart **500** that depicts examples of auxiliary sensors that can be utilized as the one or more auxiliary sensors **402** shown in **FIGS. 4A and 4D**.

[**0084**] The chart **500** indicates that one type of auxiliary sensor is a "being worn" sensor. The "being worn" sensor would indicate whether the glasses are being worn by its user. The "being worn" sensor can be performed using, for example, a thermal sensor, a motion detector, a stress sensor or a switch.

[**0085**] In one embodiment, a motion detector is used as a "being worn" sensor. A threshold can be set, such that if the amount of motion detected exceeds the threshold, the eyewear is assumed to be worn. The motion detector can, for example, be achieved by a mechanical means or an accelerometer.

[**0086**] In another embodiment, the "being worn" sensor includes one or more thermal sensors. In the case where two sensors are used, one sensor can be at approximately the middle of a temple, such as in a region that touches the head of the user wearing the glasses, and the other sensor can be positioned at the end of the same temple close to the hinge. If the temperature differential between the two sensors is beyond a certain preset value, the eyewear would be assumed to be worn.

[**0087**] In yet another embodiment, the "being worn" sensor includes a stress sensor at the hinge of the temple. The assumption is that when the eyewear is worn, the hinge is typically slightly stretched because typically the width of the head of the user is slightly wider than the width between the temples when the two temples are in the extended positions. If the value of the stress sensor is beyond a certain preset value, the glasses would be assumed to be worn.

[**0088**] In still yet another embodiment, the "being worn" sensor can be implemented as a switch. For example, the switch can utilize optical, magnetic or mechanical means. In one embodiment, the switch can be positioned at the temple of the eyewear, such as a forward end of the temple proximate to a corresponding lens holder. Different embodiments of such sensors is also described in U.S. Provisional Patent Application No. 60/583,169, filed Jun. 26, 2004, entitled "ELECTRICAL COMPONENTS FOR USE WITH EYEWEAR, AND METHODS THEREFOR," which has been incorporated herein by reference, see, e.g., section entitled "EYEGLASSES WITH USER INPUT CAPABILITY."

[**0089**] Another type of auxiliary sensor is an environmental sensor. The environmental sensor can sense environmental conditions, such as one or more of temperature (e.g., ambient temperature), pressure, humidity and toxins (e.g., chemicals, radiation, etc.).

[**0090**] Still another type of auxiliary sensor is a physical sensor. The physical sensor can sense physical conditions of the user of the glasses. Examples of physical sensors include sensing one or more of distance traveled, location, speed, calories consumed, temperature, alertness, and vital signs (e.g., heart rate, blood pressure, etc.) associated with the user of the glasses. The distance traveled could represent the horizontal distance traveled or the vertical distance (i.e. elevation) traveled. As one example, a pedometer can provide an estimate of distance traveled The speed can be acquired or determined, such as the rate of movement along the horizontal distance traveled and/or the vertical distance. As another example, calories consumed can be determined (e.g., estimated) based on various physical and/or environmental conditions that can be measured or determined. Still other physical sensors can sense emotions of the user. For example, the physical sensor could sense whether the user is calm, excited, happy, sad, angry, etc. The physical sensor can also more generally sense user activity level. As an example, the user activity level can be used to provide a lifestyle indication. For example, a lifestyle indication might show that the user was active today or, alternatively, lazy today. Such a lifestyle indication can be displayed as a text or graphic symbol to let the user or others aware of the activity level.

[**0091**] In one embodiment, one particular type of physical sensor is a heart-beat sensor. The heart-beat sensor measures the heart beat of the wearer of the eyewear. One implementation for the heart-beat sensor utilizes an infrared emitter and an infrared detector as a component. The infrared emitter can be a LED and the infrared detector can be a photodiode with an infrared filter. The component can be located at a temple of the eyewear, with both the emitter and the detector both facing the user when the eyewear is worn. In operation, the infrared emitter shines infrared radiation towards the user, and the detector captures the infrared

signals reflected back by the skin of the user. The magnitude of the reflected signals depends on the amount of blood flowing below the skin, which, in turn, depends on the heart beat. The rate of emission by the emitter and reception by the detector can be in a frequency range much higher than the heart beat, such as three thousands cycles per second. And the signals from the detector can be low-pass filtered before they are measured to identify the heart beat of the user. For example, the low-pass filter can be centered at 1 Hz.

[0092] In should be understood that the sensors might rely on more than one measured criteria. The one or more measured criteria might be used to determine the sensor output. The determination of the sensor output can involve estimation or prediction.

[0093] The auxiliary sensors can be provided in a redundant or fault-tolerant manner. For example, sensors can be provided in pairs. When one sensor of a pair malfunctions, the other one can replace it. In another embodiment, any of the auxiliary sensor information can be processed in a differential manner to examine changes to the auxiliary sensor information. The auxiliary sensors can by powered by a battery, solar energy, or kinetic energy. For reduced power consumption, the auxiliary sensors can remain in a low-power state unless data is being acquired by the auxiliary sensors. In yet another embodiment, two or more of the auxiliary sensors can communicate with one another (wired or wirelessly) to exchange data or control information.

[0094] In general, the auxiliary sensors can be fully or partially embedded in the eyewear or a base tethered to the eyewear. Alternatively, one or more of the auxiliary sensors can be separate from the eyewear, or any base tethered thereto, and wirelessly communicate with the eyewear or base.

[0095] **FIG. 6** is a block diagram of a UV monitoring system **600** according to one embodiment of the invention. The UV monitoring system **600** is generally similar to the UV monitoring systems illustrated in **FIGS. 3-4D**. However, in the UV monitoring system **600**, a battery **602** provides power to the electrical circuitry **302**. In other words, in this embodiment, the one or more solar cells **304** are optional. The UV monitoring system **600** can operate without the need for any light to impinge upon the one or more solar cells **304**. If the UV monitoring system **600** does include the one or more solar cells **304**, the power produced by the one or more solar cells **304** can be coupled to the battery **602** so as to recharge the battery. The battery **602** also allows the electrical circuitry **302** to maintain data even while no light is present (e.g., if a volatile memory is used to store data). The ability to maintain data (such as in a memory device) can be advantageous. For example, the UV monitoring system **600** may desire to output information over longer durations of time, or may desire to process data in a differential manner. The UV monitoring system **600** can also further include one or more auxiliary sensors.

[0096] **FIG. 7A** is a schematic diagram of a UV monitoring circuit **700** according to one embodiment of the invention. The UV monitoring circuit **700** includes a phototransistor **702**. Although the phototransistor **702** may itself serve as a UV detector, in some implementations, an optical filter (not shown) would limit the radiation that impinges on the phototransistor **702**, in which case the phototransistor **702** together with the optical filter serves as the UV detector. A collector terminal of the phototransistor **702** is coupled to a power source Vcc. The power source Vcc can be provided by a battery or solar cell(s). An emitter terminal of the phototransistor **702** is coupled to a first end of a resistor **704**, a first end of the capacitor **706** and a gate terminal of a transistor **708**. As an example, the transistor **708** can be an n-channel metal-oxide-semiconductor, enhancement-mode, field-effect transistor (MOSFET). A second end of the resistor **704**, a second end of the capacitor **706** and a source terminal of the transistor **708** are coupled to ground. An output device **710** couples between the power source Vcc and a drain terminal of the transistor **708**. As sufficient radiation, such as UV radiation, impinges on the phototransistor **702**, the phototransistor **702** conducts so that the emitter terminal of the phototransistor **702** outputs the voltage V1 by coupling to the power source Vcc through the phototransistor **702**. The voltage V1 is dependent on the amount of UV radiation that impinges on the phototransistor **702**. The capacitor **706** then charges up in accordance with a time constant determined by the capacitance of the capacitor **706** and the resistance of the resistor **704**. When the voltage V1 exceeds a turn-on voltage for the transistor **708**, the transistor **708** conducts and the output device **710** is activated. For example, the output device **710** can indicate that the UV monitoring circuit has detected exposure to a large amount of UV radiation. The amount of UV radiation exposure being detected can vary depending on the capacitance of the capacitor **706** and the resistance of the resistor **704**.

[0097] **FIG. 7B** is a schematic diagram of a UV monitoring circuit **750** according to another embodiment of the invention. The UV monitoring circuit **750** includes a phototransistor **752**. Although the phototransistor **752** may itself serve as a UV detector, in some implementations, an optical filter (not shown) would limit the radiation that impinges on the phototransistor **752** in which case the phototransistor **752** together with the optical filter serves as the UV detector. A collector terminal of the phototransistor **752** is coupled to a power source Vcc. The power source Vcc can be a battery or solar cell(s). An emitter terminal of the phototransistor **752** is coupled to a first end of a resistor **754** as well as to an input to an analog-to-digital (A/D) converter **756**. The second end of the resistor **754** couples to ground. The A/D converter **756** converts the voltage level at the emitter terminal of the phototransistor **752** to a digital voltage value having n bits. The digital voltage value represents the UV radiation impinging on the phototransistor **752**. The digital voltage value is supplied to a controller **758**. The controller **758** can, for example, be a microcontroller. In one embodiment, the microcontroller is a microprocessor. An output device **760** couples between the power source Vcc and ground. The output device **760** also couples to an output terminal of the controller **758**. As sufficient radiation, such as UV radiation, impinges on the phototransistor **752**, the phototransistor **752** conducts so that a voltage is supplied to the A/D converter **756** which produces the corresponding digital voltage value. The digital voltage value is dependent on the amount of UV radiation that impinges on the phototransistor **752**. The controller **758** can then determine whether to activate the output device **760**. For example, controller **758** can activate the output device **760** to indicate that the UV monitoring circuit **750** has detected (i) current exposure to a substantial (e.g., large) amount of UV radiation (e.g., amount of UV radiation greater than a threshold

amount), and/or (ii) exposure to a substantial (e.g., large) amount of UV radiation accumulated over a time period (e.g., accumulated amount of UV radiation greater than a threshold amount). Although not shown, the controller **758** can also receive sensor information from one or more other auxiliary sensors and signal other types of outputs via the output device **760**.

[**0098**] **FIG. 7C** is a schematic diagram of a UV monitoring circuit **770** according to yet another embodiment of the invention. The UV monitoring circuit **770** includes a phototransistor **772**. Although the phototransistor **772** may itself serve as a UV detector, in some implementations, an optical filter (not shown) would limit the radiation that impinges on the phototransistor **772** in which case the phototransistor **772** together with the optical filter serves as the UV detector. A collector terminal of the phototransistor **772** is coupled to a power source Vcc. An emitter terminal of the phototransistor **772** is coupled to a first end of a resistor **774**, a first end of a capacitor **776** and a gate terminal of a transistor **778**. An output device **780** couples between the power source Vcc and a drain terminal of the transistor **778**. A second end of the resistor **774**, a second end of a capacitor **776** and a source terminal of the transistor **778** are coupled to a drain terminal of a transistor **784**. As an example, the transistors **778** and **784** can be n-channel metal-oxide-semiconductor, enhancement-mode, field-effect transistors (MOSFETs). As one example, MOSFETs can be 2N7008 MOSFETs. The source terminal of the transistor **784** is coupled to ground. The gate terminal of the transistor **784** is coupled to a first end of a resistor **786** and a first end of a capacitor **788**. A second end of the resistor **786** and the second end of the capacitor **788** are coupled to ground. The gate terminal of the transistor **784** is also coupled to the power source Vcc through a being-worn switch **782**. A battery **790** can supply power to the UV monitoring circuit **770**. As one example, the battery **790** can be a three (3) Volt lithium battery. The size and configuration of the battery **790** can also vary. In one example, the battery **790** can be a coin battery. In another example, the battery **790** can be a triple-A (AAA) battery. As sufficient radiation, such as UV radiation, impinges on the phototransistor **772**, the phototransistor **772** conducts so that the emitter terminal of the phototransistor **772** outputs the voltage **V1** by coupling to the power source Vcc through the phototransistor **772**. The capacitor **776** then charges up in accordance with a time constant determined by the capacitance of the capacitor **776** and the resistance of the resistor **774**. When the voltage **V1** exceeds a turn-on voltage for the transistor **778**, the transistor **778** conducts. However, in this embodiment, the transistor **784** also must conduct in order for the output device **770** to be activated. The transistor **784** conducts when the "being worn" switch **782** is closed. The "being worn" switch **782** indicates whether the eyewear (including the UV monitoring circuit **770**) is being worn by its user. The sensitivity of the "being worn" switch **782** can be controlled by the capacitance of the capacitor **788** and the resistance of the resistor **786**. For example, the output device **780** can indicate that the UV monitoring circuit **770** has detected exposure to a large amount of UV radiation while the eyewear is being worn. The amount of UV radiation exposure being detected can vary depending on the capacitance of the capacitor **776** and the resistance of the resistor **774**.

[**0099**] The UV monitoring circuits according to the invention can also include switches, such as a "being-worn" switch, skin type, reset switch and/or an on/off switch. A "being-worn" switch was, for example, discussed above with reference to **FIG. 7C**. The on/off switch can also provide a reset capability. A reset switch and an/on switch are further discussed below with reference to **FIG. 7D**.

[**0100**] **FIG. 7D** is a schematic diagram of a UV monitoring circuit **770'** according to still yet another embodiment of the invention. The UV monitoring circuit **770'** is generally similar to the UV monitoring circuit **770** of **FIG. 7C**, except that a reset switch **792**, an on switch **794** and an off switch **796** are provided. Additionally, the resistor **786** shown in **FIG. 7C** is removed from the UV monitoring circuit **770'**. The reset switch **792** can be a push button, such that when pressed, causes any charge on the capacitor **776** to be discharged. As a result, assuming the transistor **778** is conducting (i.e., on) when the reset switch is pushed, the transistor **778** stops conducting (i.e., off) because the voltage **V1** is effectively zeroed and thus does not exceed the turn-on voltage for the transistor **778**. Consequently, the output device **780** stops providing any output (e.g., display device cleared or off, audio stopped, etc.). Once the reset switch **792** is released, the capacitor **776** can again begin to accumulate charge representing UV radiation. The on switch **794** and the off switch **796** can also be implemented as push button switches. When the on switch **794** is pressed, the capacitor **788** is charged so that the transistor **784** conducts (i.e., turns-on) and then remains on until the off switch **796** is pressed. In this embodiment, the on switch **794** and the off switch **796** should not both be pressed at the same time. Although the reset switch **792**, the on switch **794** and the off switch **796** are implemented as push button switches in **FIG. 7D**, other types of switches can be used.

[**0101**] **FIG. 8** is a flow diagram of a UV monitoring process **800** according to one embodiment of the invention. The UV monitoring process **800** is, for example, performed by a UV monitoring system embedded within and/or tethered to a pair of glasses. The UV monitoring system can, for example, represent any of the UV monitoring systems **300**, **400**, **450**, **460**, **470**, **600**, **700**, **750**, **770** or **770'** discussed above with reference to FIGS. **3**, **4A-4D**, **6** and **7A-7D**.

[**0102**] The UV monitoring process **800** begins with a decision **802** that determines whether the glasses are being worn. As noted above, the determination of whether the glasses are being worn can be done in a variety of ways. In any case, when the decision **802** determines that the glasses are not being worn, then the UV monitoring process **800** waits until the glasses are being worn. In other words, when the glasses are not being worn, the UV monitoring process **800** can stop, block (pause or wait) or deactivate until it is determined that the glasses are being worn.

[**0103**] On the other hand, when the decision **802** determines that the glasses are being worn, a UV radiation level is acquired **804**. For example, the UV radiation level can be acquired **804** from electronic circuitry which can include a UV detector. Next, UV information is determined **806** based on the UV radiation level (radiation data). For example, the UV information can pertain to normalized or calibrated radiation data, accumulated radiation data, or processed radiation data. Hence, although the UV radiation level (radiation data) could be output to the user, by outputting the UV information to the user of the glasses, more useful information (e.g., easier to comprehend) can be presented to

the user. Other examples of UV information are referenced elsewhere, such as the UV radiation information discussed below in **FIG. 9**.

[**0104**] Next, the UV information can be output **808** to the output device. The UV information need not always be output **808** to the output device. For example, the UV information could be output **808** to the output device depending upon whether it signals a particular condition to the user. As another example, the UV information could be output to the output device on request by the user. As still another example, the UV information could be output to the output device based on a sensed condition or event. Next, a decision **810** can determine whether the UV monitoring process **800** should continue. When the decision **810** determines that the UV monitoring process **800** should not continue, then the UV monitoring process **800** waits until it is time to be continued. This allows the UV monitoring process **800** to be performed periodically or as needed, which can lead to reduced power consumption and/or more meaningful output information to the user. While the UV monitoring process **800** is waiting, some or all of the UV monitoring system can be in a reduced power consumption state. Nevertheless, when the decision **810** determines that the UV monitoring process **800** should continue, the UV monitoring process **800** returns to repeat the decision **802** and subsequent operations.

[**0105**] **FIG. 9** is a flow diagram of a UV monitoring process **900** according to another embodiment of the invention. The UV monitoring process **900** is, for example, performed by a UV monitoring system embedded within and/or tethered to a pair of glasses. The UV monitoring system can, for example, represent any of the UV monitoring systems **300**, **400**, **450**, **460**, **470**, **600**, **700**, **750**, **770** or **770'** discussed above with reference to FIGS. **3**, **4A-4D**, **6** and **7A-7D**. However, the UV monitoring process **900** is particularly suitable for UV monitoring systems having "being worn" detection capability, such as the UV monitoring systems **450** and **770**.

[**0106**] The UV monitoring process **900** begins with a decision **902** that determines whether adequate solar energy is present. In this embodiment, solar cells provide adequate solar energy for the UV monitoring process **900** to be performed. In other words, the UV monitoring system (and thus the glasses) operate in the presence of light. When the decision **902** determines that adequate solar energy (e.g., sunlight or artificial light) is not present, then the UV monitoring process **900** awaits adequate solar energy. In one implementation, the UV monitoring system performing the UV monitoring process **900** can automatically turn-off or deactivate when inadequate solar energy is present. Such operation facilitates passive UV monitoring with minimal user participation.

[**0107**] On the other hand, when the decision **902** determines that adequate solar energy is present, a decision **904** determines whether the glasses are being worn. When the decision **904** determines that the glasses are not being worn, then the UV monitoring process **900** returns to repeat the decision **902** and subsequent operations. In effect, the UV monitoring process **900** is not performed when the decision **904** determines that the glasses are not being worn by the user. As noted above, the determination of whether the glasses are being worn can be done in a variety of ways.

[**0108**] Optionally, a delay can be inserted when the decision **904** determines that the glasses are not being worn so as to save power consumption. Such a delay would allow the UV monitoring process **900** to stop, halt, inactivate or otherwise wait for the period of the delay prior to returning to the decision **902** and subsequent operations. While the UV monitoring process **900** is stopped, halted, inactivated or otherwise waiting, some or all of the UV monitoring system can be in a reduced power consumption state.

[**0109**] Alternatively, when the decision **904** determines that the glasses are being worn, a decision **906** can determine whether an interval timer has expired. The interval timer can determine how frequently the UV radiation level is checked and/or how frequently radiation information is output to a display. The interval timer can also thus lead to reduced power consumption (i.e., low-power mode for the electronic circuitry). When the decision **906** determines that the interval timer has not expired, the UV monitoring process **900** waits for the interval timer to expire. During this period of waiting, the UV monitoring process **900** can place some or all of the UV monitoring system in a low-power mode. Alternatively, during this period of waiting, the UV monitoring process **900** can perform processing of other auxiliary sensors that can produce other sensor data which can be processed in conjunction with UV radiation levels.

[**0110**] Once the decision **906** determines that the interval timer has expired, a UV radiation level is acquired **908**. Then, UV radiation information is output **910** to the user of the glasses based on the UV radiation level. For example, the UV radiation information can pertain to an instantaneous radiation level, an accumulated radiation level, or some reference radiation indication. An example of a reference radiation indication can be a numerical value, text or a graphic indication. One example of a numerical value implementation is a value representing a percentage of recommended daily dosage. Another example of a numerical value implementation is a value representing UV intensity. One example of a text implementation would be a word (e.g., "ok", "Burnt", etc.). One example of a graphic implementation would be a bar-type graph. Another example of a graphic implementation would be a graphic symbol (e.g., a lobster symbol, a fire flames symbol, a picture of a sun, or a smiley face).

[**0111**] Next, the interval timer can be reset **912** and the UV monitoring process **900** can thereafter return to repeat the decision **902** and subsequent operations. As a result, the UV monitoring provided by the UV monitoring process **900** can be continuously performed so long as adequate solar energy is present and the glasses are being worn.

[**0112**] **FIG. 10** is a flow diagram of a UV monitoring process **1000** according to yet another embodiment of the invention. The UV monitoring process **1000** is, for example, performed by a UV monitoring system embedded within and/or tethered to a pair of glasses. The UV monitoring system can, for example, represent any of the UV monitoring systems **300**, **400**, **450**, **460**, **470**, **600**, **700**, **750**, **770** or **770'** discussed above with reference to FIGS. **3**, **4A-4D**, **6** and **7A-7D**.

[**0113**] The UV monitoring process **1000** begins with a decision **1002** that determines whether adequate solar energy (e.g., sunlight or artificial light) is available. When the decision **1002** determines that adequate solar energy is

not available, then the UV monitoring process **1000** is deactivated, blocked or effectively not invoked. In this embodiment, solar cells provide adequate solar energy for the UV monitoring process **1000** to be performed. In other words, the glasses operate in the presence of sufficient light. When the decision **1002** determines that adequate solar energy is not present, then the UV monitoring process **1000** awaits adequate solar energy.

[**0114**] Once the decision **1002** determines that adequate solar energy is available, then the UV monitoring process **1000** proceeds. Here, the UV monitoring process **1000** can optionally determine whether the glasses are being worn. In any case, as shown in **FIG. 10**, when the decision **1002** determines that adequate solar energy is available, a UV radiation level is acquired **1004**. For example, the UV radiation level can be acquired by a UV detector.

[**0115**] Next, the UV radiation level is accumulated **1006** during a time period. Here, the UV radiation levels acquired over a predetermined period of time are accumulated **1006** so that the radiation information is based on an accumulation of radiation that has been acquired over the predetermined period of time. For example, the predetermined period of time can be one hour, four hours, eight hours, twelve hours, twenty-four hours, two days, four days, one week, one month or one year.

[**0116**] Thereafter, a decision **1008** determines whether a UV radiation warning is needed. Here, the accumulated UV radiation level can be compared with a threshold to determine whether the accumulated UV radiation is excessive. In one implementation, the threshold can vary with, or be personalized to, different users, such as based on skin type, age, or skin condition. A user of the glasses can input data (e.g., skin type) by way of at least one switch or button. In another implementation, a plurality of threshold levels can be used, e.g., to provide a progression of UV radiation levels (and notifications). Alternatively, the glasses can use predetermined settings and offer several versions (e.g., different glasses for different skin types).

[**0117**] When the decision **1008** determines that the UV radiation warning is not needed, then the UV monitoring process **1000** returns to repeat the decision **1002** and subsequent operations so that the UV radiation level can continuously or periodically be monitored. In one embodiment, the UV monitoring process **1000** can reset the accumulated UV radiation after the period of time has been exceeded. In another embodiment, the accumulated UV radiation can be reset after no significant UV radiation is present for a period of time (e.g., 6-12 hours), after no significant solar energy is present for a period of time (e.g., 6-12 hours), or after not being worn for a period of time (e.g., 6-12 hours), whereby each evening, for example, the reset can automatically occur. In another embodiment, the UV monitoring system, and thus the UV monitoring process **1000**, can be automatically turned off (which also resets) after the period of time has been exceeded or after no significant UV radiation is present for a period of time.

[**0118**] On the other hand, when the decision **1008** determines that a UV radiation warning is needed, then a UV radiation warning is output **1010** to the user. The warning can be varied or personalized to the user, and/or can vary depending on the user, user preference, UV radiation level, or auxiliary sensor data. In one implementation, the warning can pertain to a recommendation (e.g., SPF recommendation, get out of sun, high exposure warning, etc.). The radiation warning can be output **1010** via the output device. For example, as noted above, the output device can be a display, a speaker or a vibration device. Hence, the warning can be output to the user by displaying text or graphics, audio sounds, or physical actions. Following the output **1010** of the UV radiation warning, the UV monitoring process **1000** can return to repeat the decision **1002** and subsequent operations so that UV monitoring can continue.

[**0119**] Although the circuitry in **FIGS. 7A-7D** and the processing in **FIGS. 8-10** have been described in the context of monitoring UV radiation, it should be understood that such circuitry and processing are also applicable to monitoring other types of radiation.

[**0120**] **FIG. 11** is a flow diagram of a monitoring process **1100** according to still yet another embodiment of the invention. The monitoring process **1100** is, for example, performed by a monitoring system embedded within and/or tethered to a pair of glasses. The monitoring system can, for example, represent any of the UV monitoring systems **300**, **400**, **450**, **460**, **470**, **600**, **700**, **750**, **770** or **770'** discussed above with reference to FIGS. **3**, **4A-4D**, **6** and **7A-7D**.

[**0121**] The monitoring process **1100** begins with a decision **1002** that determines whether adequate solar energy (e.g., light) is available. In one implementation, the monitoring system performing the monitoring process **1100** includes at least one solar cell or at least one phototransistor, and the solar cell or phototransistor can be used to determine whether there is adequate solar energy available. Hence, when the decision **1102** determines that adequate solar energy is not available, then the monitoring process **1100** is deactivated, blocked or effectively not invoked. In this embodiment, solar cells can provide adequate solar energy for the monitoring process **1000** to be performed. In another embodiment, a phototransistor can detect whether adequate solar energy is available. In other words, the glasses operate in the presence of sufficient light. When the decision **1102** determines that adequate solar energy is not present, then the monitoring process **1100** awaits adequate solar energy. In this condition, the monitoring system can be in a low power condition (e.g., essentially disabled).

[**0122**] Once the decision **1102** determines that adequate solar energy is available, then the monitoring process **1100** proceeds. Here, the monitoring process **1100** can optionally determine whether the glasses are being worn. In any case, as shown in **FIG. 11**, when the decision **1102** determines that adequate solar energy is available, a decision **1104** determines whether the glasses are being worn by a user. When the decision **1104** determines that the glasses are not being worn or when the decision **1102** determines that adequate solar energy is not present, then a radiation level previously acquired through accumulation (described below) can be slowly dispersed **1106**. In one embodiment, the rate of dispersal is substantially slower that the rate of accumulation of the UV radiation level. For example, in a case where the radiation being monitored is UV radiation, the UV radiation level might accumulate to cause a UV radiation warning after 1-2 hours of extensive UV or sunlight exposure, but might take 6-12 hours to disperse the previously accumulated radiation level after the UV radiation is removed. Hence, the accumulation of radiation can gracefully tolerate

interruption of radiation, such as when going indoors (e.g., within a building) for a period of time (e.g., 15 minutes, 1 hour, 4 hours, etc.) when UV radiation is being monitored. Following the block **1106**, the monitoring process **1100** returns to repeat the decision **1102** and subsequent blocks.

[**0123**] On the other hand, when the decision **1104** determines that the glasses are being worn, a radiation level is acquired **1108**. For example, the radiation level can be acquired by a detector (e.g., UV detector). Next, the radiation level is accumulated **1110**. Here, the radiation levels acquired can be accumulated so that radiation information can be based on an accumulation of radiation that has been acquired while the glasses are being worn.

[**0124**] Thereafter, a decision **1112** determines whether a radiation warning is needed. Here, the accumulated radiation level can be compared with a threshold to determine whether the accumulated radiation is excessive. In one implementation, the threshold can vary with, or be personalized to, different users, such as based on skin type, age or skin condition. In another implementation, a plurality of threshold levels can be used, e.g., to provide a progression of radiation levels (and notifications). A user of the glasses can input data (e.g., skin type, preferences) by way of at least one switch or button. Alternatively, the glasses can use predetermined settings and offer several versions (e.g., different glasses for different skin types).

[**0125**] When the decision **1112** determines that the radiation warning is not needed, then the monitoring process **1100** deactivates **1114** the radiation warning. Alternatively, when the decision **1112** determines that the radiation warning is needed, then the monitoring process **1100** activates **1116** the radiation warning. The warning can be varied or personalized to the user, and/or can vary depending on the user, user preference, radiation level, or auxiliary sensor data. The radiation warning can be produced at an output device. For example, as noted above, the output device can be a display, a speaker or a vibration device. In one implementation, the warning is a graphical symbol or text that signals the user of the glasses that they have received a significant amount of radiation. Following the deactivation **1114** and the activation **1116**, the monitoring process **1100** can return to repeat the decision **1102** and subsequent operations so that monitoring can continue.

[**0126**] The radiation warning can remain active anywhere from a brief period to continuously depending on the type of warning being provided, user preference or manufacturer setting. For example, an audio alert might sound for a few seconds, while a displayed alert might remain on for a longer duration. The radiation warning can be output differently depending on the power situation of the monitoring system. If the monitoring system is being solar powered, then the radiation warning can remain active until deactivated. However, when the monitoring system is being battery powered, the radiation warning might be active for only a brief period.

[**0127**] **FIG. 12** is a block diagram of electronic circuitry **1200** according to one embodiment of the invention. The electronic circuitry **1200** can, for example, be used for at least a part of the electronic circuitry **302** shown in **FIGS. 3, 4A**, **4**B, **4**D and **6**. The electronic circuitry **1200** includes a radiation detector **1202** that outputs a radiation level signal dependent on an amount of radiation impinging on the radiation detector **1202**. For example, in the case where radiation from sunlight is being monitored, the radiation detector **1202** can principally detect ultraviolet or infrared radiation. In another example, in the case where radiation from x-ray machines or nuclear materials is being monitored, the radiation detector can principally detect gamma radiation. A radiation accumulator **1204** receives the radiation signal level and accumulates the radiation signal level to produce an accumulated radiation level. A level comparator **1206** can then compare the accumulated radiation level to a threshold level (TH). The threshold level can be fixed, selected or determined. When the accumulated radiation level exceeds the threshold level, then an output driver **1208** operates to output one or more signals to cause an output device to produce an output. The output can be visual, audio, and/or physical. The threshold can be varied or personalized to the user, and/or can vary depending on the user. The threshold can also depend on or vary in view of one or more of user preferences, position (e.g., closer equator), intensity level of radiation, user characteristics (e.g., skin color or type), or auxiliary sensor data, etc. The level comparator **1206** can also use one or more threshold levels.

[**0128**] In one embodiment, the threshold used by the level comparator **1206** can correspond to a recommended daily dosage of such radiation. For example, if the radiation detector **1202** is primarily detecting UV radiation, the recommended daily dosage would pertain to UV radiation.

[**0129**] **FIG. 13A** is a schematic diagram of an electronic circuit **1300** for a radiation detection system according to one embodiment of the invention. The electronic circuit **1300** is, for example, suitable for use as the electronic circuitry **1200** shown in **FIG. 12**.

[**0130**] The electronic circuit **1300** includes a phototransistor **1302** and a resistor (R1) **1304** coupled in series between a supply voltage (Vs) and ground. In this embodiment, the phototransistor **1302** implements a radiation detector. As radiation (of an appropriate frequency range) strikes the phototransistor **1302**, a voltage V1 appears at a first node connecting the phototransistor **1302** to the resistor (R1) **1304**. The voltage V1 induces a current I1 that passes through a diode **1305** and a resistor (R2) **1306**. A voltage V2 at a second node then begins to rise from ground level to the level of V1 by the charging of a capacitor (C1) **1308** at a rate dependent on the amount of the current I1 and the capacitance of the capacitor (C1) **1308** and the resistances of the resistors (R2 and R3) **1306** and **1310**, respectively. A Schmitt trigger inverter **1312** couples to the second node and receives the voltage V2 at its input. When the voltage V2 exceeds the turn-on voltage for the inverter **1312**, the output of the inverter **1312** goes low and couples to a third node via a diode **1314**. At this point, the low voltage (V3) at the third node couples to an input of a Schmitt trigger inverter **1316**, which outputs a high voltage (V4) at a fourth node which charges a resistor (R4) **1318** and capacitor (C2) **1320**. The resistor (R4) **1318** couples between the third and fourth nodes. The capacitor (C2) couples between the third node and ground. Once the voltage V3 has risen sufficiently, the inverter **1316** switches to output a low voltage (V4), thereby discharging the capacitor (C2) **1320**. Hence, the inverter **1316**, the resister (R4) **1318** and the capacitor (C2) **1320** form an oscillator. The outputs for the electronic circuit **1300** are complementary, a positive output from the fourth node and a negative output from an inverter **1322** coupled to the

fourth node. These complementary outputs are applicable for driving a LCD type display device.

[0131] Although not shown in **FIG. 13A**, the electronic circuit **1300** can optionally further include a reset switch. For example, if provided, the reset switch can be coupled between the second node and ground. While the reset switch is normally open, when closed the reset switch discharges the capacitor (C1) **1308**. As an example, the reset switch can be implemented by a push button switch. Although the electronic circuit **1300** can automatically reset after no significant UV radiation is present for a period of time (such as noted above), the reset switch permits a user to manually reset the electronic circuit **1300** so as to clear and restart monitoring (e.g., accumulation) of radiation.

[0132] The electronic circuit **1300** can facilitate low power operation. In one implementation, the resistor (R1) **1304** can be made large. In another implementation, power dissipated by resistor (R1) can be conserved by using a radiation detector, such as a phototransistor, that is responsive to the radiation of interest but with very low sensitivity to the radiation of interest. In the case of a phototransistor, sensitivity can be reduced by covering the phototransistor with a layer of aluminized Mylar. Aluminized Mylar can attenuate light passing through it by a factor of approximately one-thousand (1000). In still another implementation, the supply voltage (Vs) supplied to the phototransistor **1302** can be periodic, so that power consumed by the resister (R1), which, in this case, need not be a high resistance, is substantially reduced, yet the phototransistor **1302** has an extended dynamic range. The sensitivity of the radiation measurement can also be adjusted by changing the duty-cycle of the periodic supply voltage (Vs). These various implementations for low power operation can be used singly or in combination.

[0133] **FIG. 13B** is a schematic diagram of a periodic supply voltage circuit **1350** according to one embodiment of the invention. The periodic supply voltage circuit **1350** is, for example, suitable for use to provide a supply voltage (Vs) to the electronic circuit **1300** for a radiation detection system. In this embodiment the supply voltage (Vs) is periodic. In this example, the supply voltage (Vs) uses pulse-width modulation. The periodic supply voltage circuit **1350** includes a Schmitt trigger inverter **1352** that is powered by a power supply (Vcc) when the radiation detection system is operating (i.e., turned-on). At this point, the voltage (V5) at an input node is assumed low and couples to an input of the Schmitt trigger inverter **1352**, which outputs a high voltage (V6) at an output node which charges a capacitor (C3) **1360** via resistor (R5) **1354** and resistor (R6) **1358**. A diode **1356** conducts during charging, but blocks during discharging. The resistor (R5) **1354** couples between the input and output nodes. The diode **1356** and the resistor (R6) **1358** are coupled in series between the input and output nodes. The capacitor (C3) **1360** couples between the input node and ground. Once the voltage (V5) at the input node has risen sufficiently, the inverter **1352** switches to output a low voltage (V6) at the output node, thereby discharging the capacitor (C3) **1360** via the resistor (R5) **1354**. Hence, the periodic supply voltage circuit **1350** forms an oscillator. The output for the periodic supply voltage circuit **1350** at the output node (V6) can be the supply voltage (Vs) for the radiation detection system. Given the diode **1356**, the supply voltage (Vs) is in the high state for a short time and in the low state for a longer period of time.

[0134] Although the resistance and capacitance values for the electronic circuit **1300** and the periodic supply voltage circuit **1350** can vary widely with implementation and application, some exemplary values are as follows. For example, for the electronic circuit **1300**, the resistor (R1) **1304** can be 22 k ohms, the resistor (R4) **1318** can be 330 k ohms, and the capacitor (C2) **1320** can be 0.1 microfarads (μf). The resistor (R2) **1306** and the resistor (R3) **1310** can, for example, be in the range of 1-50M ohms. The capacitor (C1) **1308** can, for example, be in the range of 1-100 μf. For example, for the periodic supply voltage circuit **1350**, the resistor (R5) **1354** can be 10M ohms, the resistor (R6) **1358** can be 200 k ohms, and the capacitor (C3) **1360** can be 0.01 μf.

[0135] **FIG. 14A** is a block diagram of a radiation monitoring system **1400** according to one embodiment of the invention. The radiation monitoring system **1400** can, for example, be used for the electronic circuitry **302** shown in **FIGS. 3, 4A, 4B, 4D** and **6**. The radiation monitoring system **1400** includes a radiation detector **1402** that detects impinging radiation, such as ultraviolet radiation, infrared radiation or light, and outputs a radiation indication to a radiation-to-frequency converter **1404**. The radiation indication can represent an amount of radiation impinging on the radiation detector **1402**. The radiation-to-frequency converter **1404** converts the radiation indication into a frequency signal. The frequency signal is supplied to an output manager **1406**. The output manager **1406** coordinates when an output is to be provided for the radiation monitoring system **1400**. In one embodiment, the output manager **1406** determines that an output indication should be provided based on a count or a division with respect to the frequency signal. For example, the greater the amount of radiation being detected by the radiation detector **1402**, the greater the frequency of the frequency signal. Hence, when greater levels of radiation are detected, the output manager **1406** can more quickly provide an output indication (e.g., signaling substantial radiation exposure) as compared to a situation in which the amount of radiation being detected by the radiation detector **1402** is substantially less.

[0136] In any case, when the output manager **1406** determines that an output indication is to be provided, the output manager **1406** provides an output signal to an output driver **1408**. The output driver **1408** controls an output device so as to produce an output indication. The output indication can be textual (including numerical) and/or graphical. For example, as a numerical output, the output could indicate a percentage of acceptable radiation for a day that has been already detected. As another example, the output could be a graphical output that pertains a symbol or a graph. In one embodiment, the output provided by the output device is a visual output on a display device. However, in general, the output can be visual and/or audio. For example, examples of audio outputs are beeping sounds, synthesized speech, or prerecorded audio messages.

[0137] The output manager **1406** receives the frequency signal from the radiation-to-frequency converter **1404** and can determines when an output indication should be provided. In one implementation, the output manager **1406** can include a divider that divides down the frequency signal

from the radiation-to-frequency converter **1404** such that the output manager **1406** causes the output driver **1408** to produce an output indication based on an amount of radiation that has effectively been detected. As an example, a predetermined amount of radiation to be effectively detected can be controlled by altering the amount of division provided by the divider. Hence, the amount of division utilized by the output manager **1406** can correspond to a radiation threshold amount, such as a recommended daily dosage of ultraviolet radiation. The amount of division provided by the divider can also depend on or vary in view of one or more of user preferences, position (e.g., proximity to equator), intensity level of radiation, user characteristics (e.g., skin color or type), or auxiliary sensor data, etc. Alternatively, the output manager **1406** can include a counter that counts based on the frequency signal from the radiation-to-frequency converter **1404**, wherein the amount of count utilized by the output manager **1406** can also correspond to a radiation threshold amount.

[**0138**] In an alternative embodiment, the radiation-to-frequency converter **1404** can instead be a radiation-to-pulse-width converter. The radiation-to-pulse-width converter can convert the radiation indication into a pulse-width signal. The pulse-width signal is supplied to an output manager **1406**. The output manager **1406** arranges when an output is to be provided for the radiation monitoring system **1400**. In one embodiment, the output manager **1406** determines that an output indication should be provided based on the width of the pulse of the pulse-width signal.

[**0139**] **FIG. 14B** is a block diagram of a radiation monitoring system **1420** according to another embodiment of the invention. The radiation monitoring system **1420** is, for example, a detailed embodiment of the radiation monitoring system **1400** illustrated in **FIG. 14A**.

[**0140**] The radiation monitoring system **1420** includes a sensor **1422**. The sensor **1422** senses radiation, such as ultraviolet radiation or infrared radiation. The sensor **1422** outputs a radiation indication to a radiation-to-frequency converter **1424**. The radiation-to-frequency converter **1424** outputs a frequency signal ϕ_1 to a divider **1426**. The divider **1426** divides the frequency signal ϕ_1 and outputs a divided frequency signal Q_N. The divided frequency signal Q_N is supplied to a latch **1428**. As shown in **FIG. 14B**, in one embodiment, the latch **1428** can be a set-reset type of latch. The output of the latch **1428** is an output signal (OUT). The output signal (OUT) is supplied to a LCD driver **1430**. When the output signal (OUT) is high, the LCD driver **1430** causes an output indication to be provided on a LCD display **1432**.

[**0141**] Still further, the radiation monitoring system **1420** includes a power supply **1434** that supplies power to various components under the radiation monitoring system **1420**. The power supply **1434** outputs a positive voltage (V+), a ground signal (GND), and a negative voltage (B−). The signals provided by the power supply **1434** are supplied to various components of the radiation monitoring system **1420** as shown in **FIG. 14B**. In addition, the radiation monitoring system **1420** includes a first switch (S1) and a second switch (S2). The first switch (S1) is a reset switch that is coupled to the divider **1426** and the latch **1428**. When the first switch (S1) is closed a reset operation occurs so that the divider **1426** and the latch **1428** are reset. Hence, any accumulated data in these components is cleared. As a result, radiation monitoring can be cleared and restarted by closing and then opening the first switch (S1). The second switch (S2) is coupled to the power supply **1434** and serves as an on-off switch. When the second switch (S2) is closed (i.e., "switched on"), the power supply **1434** outputs various voltage signals. On the other hand, when the second switch (S2) is open (i.e., "switched off"), the power supply **1434** does not output the voltage levels.

[**0142**] As noted above, the radiation monitoring system **1420** is an example of a more detailed embodiment of the radiation monitoring system **1400** illustrated in **FIG. 14A**. As such, the divider **1426** and the latch **1428** together can correspond to the output manager **1406** in one embodiment, and the LCD driver **1430** can corresponds to the output driver **1408** in one embodiment.

[**0143**] **FIG. 14C** is a schematic diagram of a radiation-to-frequency converter **1440** and a sensor according to one embodiment of the invention. The radiation-to-frequency converter **1440** represents a detailed embodiment for the radiation-to-frequency converter **1424** illustrated in **FIG. 14B**. As shown in **FIG. 14C**, the sensor includes a phototransistor **1442** that serves as a radiation sensor. In particular, the phototransistor **1442** can be sensitive to a particular wavelengths of radiation, such as ultraviolet radiation or infrared radiation. As radiation impinges on the phototransistor **1442**, a voltage dependent upon the amount of radiation impinging on the phototransistor **1442** is produced at a first node **1444**. The first node **1444** is coupled to ground by a capacitor **1446**. A Schmitt trigger inverter **1448** couples between the first mode **1444** and a second node **1450**. The output of the radiation-to-frequency converter **1440** is provided at the second node **1450** and pertains to the frequency signal ϕ_1. The phototransistor **1442** is also coupled between the first node **1444** and the second node **1450**. In addition, a series combination of a resistor **1452** and a diode **1454** are also coupled between the first node **1444** and the second node **1450**. The frequency signal ϕ_1 being produced at the second node **1450** has a frequency that is dependent upon the resistance of the resistor **1452**, the capacitance of the capacitor **1446**, the sensitivity of the phototransistor **1442**, and the amount of radiation impinging upon the phototransistor **1442**. If the first node **1444** is low, the second node **1452** is high. In such a situation, radiation impinging upon the phototransistor **1442** causes the first node **1444** to transition to a "high" level, which then in turn causes the second node **1450** to transition to a "low" level. Subsequently, from such a state, the first node **1444** is discharged to a "low" state in accordance with a time constant set by the resistor **1452** and the capacitor **1446**. The cycling continues so that the resulting frequency signal ϕ_1 is produced. As an example, the resistance of the resistor **1452** can be 10 k ohms, and the capacitance of the capacitor **1446** can be 0.1 microfarads, and the resulting frequency for the resulting frequency signal ϕ_1 is then about in a range of about 0-400 Hertz. The Schmitt trigger inverter **1448** can be implemented by a CD74HC14 chip, for example. Hence, the radiation-to-frequency converter **1440** can produce a digital output which has a frequency dependent on the amount of impinging radiation. The digital output is also produced in a power-efficient manner. In one embodiment, power-efficiency results because the Schmitt trigger inverter **1448** is power efficient, the capacitor **1446** is rather small, and the resulting frequency signal ϕ_1 is low. Power consumption can be further reduced by only periodically supplying power to

some or all of the components of the radiation-to-frequency converter **1440**, or more generally, the radiation monitoring system **1400**.

[0144] **FIG. 14D** is a schematic diagram of a latch **1450** according to one embodiment of the invention. The latch **1450** represents a detailed embodiment for the latch **1428** shown in **FIG. 14B**. The latch **1450** includes a first NAND gate **1452** and a second NAND gate **1454**. These NAND gates **1452** and **1454** are connected as shown in **FIG. 14D**.

[0145] **FIG. 14E** is a schematic diagram of a LCD driver **1460** according to one embodiment of the invention. The LCD driver **1460** represents a detailed embodiment for the LCD driver **1430** illustrated in **FIG. 14B**. The LCD driver **1460** includes a diode **1462** having a cathode terminal that receives the enable signal (EN) from the latch **1450**, and an anode terminal that couples to a first node **1464**. The LCD driver **1460** also includes a capacitor **1466** that couples between the first node **1464** and ground. Additionally, the LCD driver **1460** includes a first Schmitt trigger inverter **1468** coupled between the first node **1464** and a second node **1470**, and a second Schmitt trigger inverter **1472** connected to the second node **1470**. In addition, a resistor **1474** couples the first node **1464** and the second node **1470**. The output of the LCD driver **1460** is provided from the second node **1470** and from the output of the second Schmitt trigger inverter **1472**. These outputs are the designed to excite the appropriate one or more LCD elements of the LCD display **1432** so as to produce the desired output indication. As an example, the resistance of the resistor **1474** can be 330 k ohms, and the capacitance of the capacitor **1446** can be 0.1 microfarads, and the resulting frequency for the outputs (when enabled) is then about 200 Hertz. The Schmitt trigger inverters can be implemented by a CD74HC14 chip, for example. It should be noted that LCD driver **1460** is designed to excite a single LCD element or a single group of LCD elements. Hence, in cases in which the output indication is to excite multiple LCD elements at different times, additional circuitry would be required.

[0146] **FIG. 14F** is a schematic diagram of a power supply **1475** according to one embodiment of the invention. The power supply **1475** represents a detailed embodiment of the power supply **1434** illustrated in **FIG. 14B**.

[0147] The power supply **1475** includes a battery **1476** that is coupled between a positive voltage terminal (V+) then a negative voltage terminal (B−). The power supply **1475** also includes a transistor **1477**. In one embodiment, the transistor **1477** is an enhancement type n-channel MOSFET. The drain terminal of the transistor **1477** is coupled to the ground terminal of the power supply **1475**, and a source terminal of the transistor **1477** is coupled to the negative voltage terminal (B−). A gate terminal of the transistor **1477** couples to a first node **1478**. The first node **1478** is coupled to the negative voltage terminal (B−) by a capacitor **1479-1**, and is coupled to the positive voltage terminal (V+) by a resistor **1479-2** and a switch S2*a*. The switch S2*a* is closed when the power supply **1475** is "on." The power supply **1475** also includes a switch S2*b* that is closed when the power supply **1475** is "off." Hence, only one of the switches S2*a* and S2*b* are closed at any one point. When the switch S2*b* is closed, the first node **1478** is coupled to the negative voltage terminal (B−) so that the transistor **1477** is "off." On the other hand, when the switch S2*a* is closed, the first node **1478** is able to hold a positive voltage which activates the transistor **1477**. When the transistor **1477** is activated, the negative voltage provided on the negative voltage terminal (B−) is provided at the ground (GND) terminal. As an example, the resistance of the resistor **1479-2** can be 100 k ohms, and the capacitance of the capacitor **1479-1** can be 0.01 microfarads, and the battery can provide 3 Volts (e.g., 35 mA-H). The transistor **1477** can be implemented by a 2N708 chip, for example.

[0148] In one embodiment, a radiation detector can be mounted on a substrate and couple to other circuitry so that radiation monitoring can be performed. The manner in which the radiation detector is mounted to the substrate can vary with implementation. In one implementation, the substrate is a printed circuit board (PCB) that supports not only the radiation detector but also the other circuitry. **FIGS. 14G-14I** illustrate examples of a few possible implementations in the case where the radiation detector is a UV detector; however, other implementations can be utilized.

[0149] **FIG. 14G** is a cross-sectional view of a UV detector arrangement **1480** according to one embodiment of the invention. The UV detector arrangement **1480** is formed on a printed circuit board **1481** that contains a hole (or opening) **1482**. A phototransistor **1483** is placed in the hole **1482**. A base **1484** for the phototransistor **1483** is used to electrically connect the phototransistor **1483** to the printed circuit board **1481** via solder **1485**. A film of aluminized Mylar **1486** is attached to the top of the printed circuit board **1481** at the hole **1482**. The aluminized Mylar **1486** serves as a sensitivity reducer since it generally attenuates the radiation (e.g., UV or IR radiation) that impinges on the phototransistor **1483**. The aluminized Mylar **1486** can be attached to the printed circuit board **1481** by an adhesive, such as epoxy. Attached to the top of the aluminized Mylar **1486** is an aluminum sheet **1487** with an opening **1488**. The opening **1488** corresponds to, but has a substantially smaller diameter than the hole **1482**. Hence, the aluminum sheet **1487** further restricts radiation (i.e., restricts volume of radiation) impinging on the phototransistor **1483**. An optical filter **1489** is placed over the aluminum sheet **1487** at the vicinity of the hole **1482**. As an example, the optical filter **1489** primarily passes UV radiation. The UV radiation then is limited by the opening **1488** in the aluminum sheet **1487**, attenuated by the aluminized Mylar **1486**, and then the attenuated UV radiation is sensed by the phototransistor **1483**. The aluminum sheet **1487** and the optical filter **1489** can be attached with an adhesive, such as epoxy.

[0150] Optionally, the back side of the printed circuit board **1481** at the vicinity of the phototransistor **1483** can attenuate or block radiation that might otherwise impinge on and be sensed by the phototransistor **1483**. As shown in **FIG. 14G**, an aluminum sheet **1491** can be attached to the back side of the printed circuit board **1481** behind the phototransistor **1483**. The aluminum sheet **1491** can be attached with an adhesive, such as epoxy.

[0151] Finally, the top of the UV detector arrangement **1480**, except for the optical filter **1489**, can be encapsulated by a top encapsulant **1490**. For example, the top encapsulant **1490** can be epoxy. The bottom of the UV detector arrangement **1480** can be encapsulated by a bottom encapsulant **1492**. For example, the bottom encapsulant **1492** can be

epoxy. The epoxy used for the encapsulant **1490** or **1492** can be opaque (e.g., block epoxy) to further assist in blocking radiation.

[0152] **FIG. 14H** is a cross-sectional view of a UV detector arrangement **1480'** according to one embodiment of the invention. The UV detector arrangement **1480'** is formed on a printed circuit board **1481** that contains a hole (or opening) **1482**. A phototransistor **1483** is placed in the hole **1482**. A base **1484** for the phototransistor **1483** is used to electrically connect the phototransistor **1483** to the printed circuit board **1481** via solder **1485**. A film of aluminized Mylar **1486** is attached to the top of the printed circuit board **1481** at the hole **1482**. The aluminized Mylar **1486** serves as a sensitivity reducer since it generally attenuates the radiation that impinges on the phototransistor **1483**. The aluminized Mylar **1486** can be attached to the printed circuit board **1481** by foil tape **1493** (that uses an adhesive). The foil tape **1493** does not cover the region of the aluminized Mylar **1486** above the phototransistor **1483**. The foil tape **1493** further restricts radiation (i.e., restricts volume of radiation) impinging on the phototransistor **1483**. Attached to the top of the foil tape **1493** is an optical filter **1489** at the vicinity of the hole **1482**. Foil tape **1494** (that uses an adhesive) can be used to hold the optical filter **1489** in position. The foil tape **1494** may also serve to restrict radiation impinging on the phototransistor **1483**. As an example, the optical filter **1489** primarily passes UV radiation. The UV radiation can then be limited by the opening in the foil tapes **1493** and **1494** as well as the aluminized Mylar **1486**. A cavity **1497** in the hole **1482** above the phototransistor **1483** can be filled with an epoxy, such as clear epoxy.

[0153] Optionally, the back side of the printed circuit board **1481** at the vicinity of the phototransistor **1483** can attenuate or block radiation that might otherwise impinge on and be sensed by the phototransistor **1483**. As shown in **FIG. 14H**, a foil tape **1496** can be attached to the back side of the printed circuit board **1481** behind the phototransistor **1483**. A bottom cavity **1498** between the back side of the printed circuit board **1481** and the foil tape **1496** can be filled with an opaque substance, e.g., block epoxy, to further assist in attenuating or blocking radiation.

[0154] **FIG. 14I** is a cross-sectional view of a UV detector arrangement **1480"** according to one embodiment of the invention. The UV detector arrangement **1480"** shown in **FIG. 14I** is generally similar to the UV detector arrangement **1480'** shown in **FIG. 14H**, except that the UV detector arrangement **1480"** does not use the optical filter **1489** or the foil tape **1494**. In such an embodiment, an optical filter (such as the optical filter **1489**) is not required because the spectral response of the phototransistor **1483'** is appropriate without filtering or because a coating provided on the phototransistor **1483'** or its housing (package) effectuates similar filtering and obviates the need for a separate optical filter (such as the optical filter **1489**).

[0155] The phototransistor **1483** or **1483'** shown in **FIGS. 14G-14I** can be a photodiode as noted elsewhere in this patent application. In addition, the phototransistor **1483** or **1483'** (or photodiode) can have a height greater than the thickness of the printed circuit board **1481**.

[0156] **FIG. 14J** is a partial block diagram of a radiation monitoring system **3000** according to one embodiment of the invention. The radiation monitoring system **3000** represents one implementation of a portion of the radiation monitoring system **1400** illustrated in **FIG. 14A** or a portion of the radiation monitoring system **1420** illustrated in **FIG. 14B**. In particular, the radiation monitoring system **3000** provides reduced power operation. The reduced power operation can substantially extend battery life. In this embodiment, a radiation-to-frequency converter **3002** receives a low duty cycle signal V_D. The low duty cycle signal V_D causes the radiation-to-frequency to periodically operate briefly. The duty cycle and frequency for the low duty cycle signal V_D can vary with implementation.

[0157] **FIG. 14K** is a schematic diagram of a radiation-to-frequency converter **3010** and a sensor according to one embodiment of the invention. The radiation-to-frequency converter **3010** is generally similar to the radiation-to-frequency converter **1440** illustrated in **FIG. 14C**. However, the radiation-to-frequency converter **3010** uses a photodiode **3012** instead of the phototransistor **1442**. Also, the resistor **1452** and the diode **1454** illustrated in **FIG. 14C** are typically not needed as the photodiode **3012** is a diode and often includes an internal resistance. One example of such a photodiode is Everlight PD-15-22 (another is Everlight PD-93-21), though various different photodiodes can be used, and an optical filter may be used with the photodiode. Additionally, the radiation-to-frequency converter **3010** also include a transistor **3014**. The transistor **3014** is controlled by the low duty cycle signal V_D such that the low power operation results. Namely, only when the low duty cycle signal V_D is "low" is significant power being consumed by the radiation monitoring system to monitor radiation. As a result, the radiation monitoring system can operate under battery power for extended durations.

[0158] **FIG. 14L** is a diagram of a representative waveform **3020** of a low duty cycle signal V_D. The low duty cycle signal V_D is "low" much less than it is "high." In this embodiment, radiation monitoring occurs when low duty cycle signal V_D is "low." Hence, the on time for a periodic low duty cycle signal V_D is denoted t_{ON} and the off time is denoted t_{OFF}. As an example, the on time t_{ON} can be 0.5 seconds, while the off time t_{OFF} can be 128 seconds (which is a duty cycle of 256 to 1.

[0159] **FIG. 14M** is a schematic diagram of a power supply **3040** according to one embodiment of the invention. The power supply **3040** represents a detailed embodiment for a power supply that could be an alternative design for the power supply **1434** illustrated in **FIG. 14B**.

[0160] The power supply **3040** includes a battery **3042** that is coupled between a positive voltage terminal (B+) and ground terminal (GND). The power supply **3040** includes an on/off switch S3. When the switch S3 is closed the power supply is turned on. In one implementation, the switch S3 is a push button switch that is normally open (i.e., not close). The power supply **3040** also includes a resistor **3044** and a transistor **3046**. In one embodiment, the transistor **3046** is an enhancement type p-channel MOSFET. The drain terminal of the transistor **3046** is coupled to the ground terminal (GND) of the power supply **3040** via a resistor **3048**, and a source terminal of the transistor **3046** is coupled to the positive voltage terminal (B+) of the battery **3042**. A gate terminal of the transistor **3046** is coupled to a first node **3049**. The first node **3049** is coupled to the positive voltage terminal (B+) by the resistor **3044**, and can be coupled to the

ground terminal (GND) via the switch S3. The power supply **3040** also includes a transistor **3050**, having a gate terminal coupled to a second node **3051**, a source terminal connected to the ground terminal (GND), and a drain terminal connected to a third node **3052**. In one embodiment, the transistor **3050** is an enhancement type n-channel MOSFET. Further, the power supply **3040** includes a transistor **3054**, a resistor **3056** and a capacitor **3058**. In one embodiment, the transistor **3054** is an enhancement type p-channel MOSFET. The gate terminal of the transistor **3054** connects to the third node **3052**, the source terminal of the transistor **3054** connects to the positive voltage terminal (B+), and the drain terminal of the transistor **3054** connects to a voltage output terminal (V+). The resistor **3056** and the capacitor **3058** are connected in parallel between the positive voltage terminal (B+) and the third node **3052**.

[**0161**] The operation of the power supply **3040** can be briefly explained as follows. When the switch S3 is press (momentarily), the transistor **3046** pulls the second node **3051** to approximately the positive voltage terminal (B+), which activates the transistor **3050**. When the transistor **3050** is activated, the third node is pulled to approximately ground, which activates the transistor **3054**. When the transistor **3054** is activated, the voltage output terminal (V+) is capable of outputting power for use by other circuitry. Since the switch S3 is soon released, the transistors **3046** and **3050** deactivate. However, the transistor **3054** remains on for a period of time determined by a time constant determined by the resistor **3056** and the capacitor **3058**. Hence, during the period of time, charge from the capacitor **3058** is slowly discharged. Once substantially discharged, the transistor **3054** deactivates, thus ceasing output of any power to the other circuitry. In effect, the power supply **3040** automatically turns off after the period of time. As an example, the period of time can be 12 hours (e.g., representing daily usage of a radiation monitoring system). The power supply **3040** can also receive a reset signal that serves to restart any "auto-off" timing that may be used.

[**0162**] It should be noted that a power supply for a radiation monitoring system can implemented in various ways. The power supply **1475** illustrated in **FIG. 14F** uses an "on" switch and an "off" switch. The power supply **3040** in **FIG. 14M** uses a single "on" switch (e.g., push button) and an "auto-off" feature. In still another embodiment, the power supply, and thus the radiation monitoring system, can always be powered on. With CMOS transistor devices, the power consumption is relatively low such that a radiation monitoring system could be battery powered for an extended period of time without the need to recharge or replace the battery (i.e., long battery life). When the radiation monitoring is only briefly performed periodically, such as discussed above with reference to **FIGS. 14J, 14K** and **14**L, the power consumption is particularly low and the battery life can be particularly long.

[**0163**] **FIG. 14N** is a diagram of a binary counter **4000** according to one embodiment of the invention. The binary counter **4000** is, for example, suitable for use as at least a portion of the divider **1426** illustrated in **FIG. 14B**. As an example, the binary counter **4000** can be a 26-bit counter. The inputs to the binary counter **4000** include the frequency signal ϕ_1 from a radiation-to-frequency converter (e.g., radiation-to-frequency converter **1424**), a reset signal (such as from a switch S1), and an enable signal. The switch S1 is, for example, a push-button type switch. The binary counter **4000** can have a plurality of output lines (e.g., twenty-six (26) output lines), of which five such lines Q_{19} through Q_{24} are illustrated. These output are representative outputs that might be utilized by subsequent circuitry to control an output device. However, it should be understood that other output lines could alternatively be used. The enable input to the binary counter **4000** permits the binary counter to count when "high" but stops the binary counter **4000** from counting when "low."

[**0164**] **FIG. 14O** is a block diagram of latch-driver circuitry **4100** according to one embodiment of the invention. In one embodiment, the latch-driver circuitry **4100** can correspond to the latch **1428**, the LCD driver **1430** and the LCD display **1432** as shown in **FIG. 14B**.

[**0165**] In this embodiment, the latch-driver circuitry **4100** has the capability to separately drive a plurality of different segments. These segments can be segments of a LCD display and can be combined to form symbols or charts. For example, in one embodiment, the LCD segments can be utilized to form a bar graph output.

[**0166**] The latch-driver circuitry **4100** includes a latch **4102** that receives an input associated with output Q_{19} from a divider (e.g., the binary counter **4000**). The output of the latch **4102** is supplied to a LCD driver **4104**. The LCD driver **4104** includes NAND gates **4106** and **4108**. The outputs of the NAND gates **4106** and **4108** are supplied to a LCD segment-**14110**. The LCD driver **4104** also includes frequency signals ϕ_2 and $/\phi_2$ from an oscillator **4112**.

[**0167**] The latch-driver circuitry **4100** further includes a latch **4114**, a LCD driver **4116** and a LCD segment-**24418**. The latch **4114** receives an input signal associated with the output Q_{20} from the divider (e.g., the binary counter **4000**). Likewise, for one or more other outputs from the divider (e.g., the binary counter **4000**), the latch-driver circuitry **4100** can include a latch, a LCD driver and a LCD segment. In this regard, the output Q_N from the divider represents a generic output signal which is supplied to a latch **4120**. The output of the latch **4120** is supplied to a LCD driver **4122**. The output of the display driver **4122** is coupled to a LCD segment-N **4124**. Additionally, each of the latches **4102**, **4114** and **4120** receives a reset signal from a switch S1.

[**0168**] Still further, the output Q_N is coupled to an enable terminal of the divider (e.g., the binary counter **4000**) via an inverter **4126**. When the signal Q_N is high, the LCD segments are fully illuminated; hence, the enable signal output by the inverter **4126** is "low" so that the divider (e.g., the binary counter **4000**) is disabled, until reset.

[**0169**] **FIG. 14P** is a block diagram of driver circuitry **4200** according to one embodiment of the invention. The driver circuitry **4200** is coupled to one or more outputs from a divider (e.g., the binary counter **4000**). In this illustrated embodiment, the driver circuitry **4200** couples to the outputs Q_{20} and Q_{21}.

[**0170**] The driver circuitry **4200** includes a LCD driver **4202** that receives the outputs Q_{20} and Q_{21} from the divider (e.g., the binary counter **4000**). These signals Q_{20} and Q_{21} are supplied to a NOR gate **4206** whose output is supplied to NAND gates **4208** and **4210**. The outputs of the NAND gates **4208** and **4210** are supplied to a LCD graphic segment-

14204. As shown in **FIG. 14P**, the LCD graphic segment-**14204** represents a "happy" smiley face.

[**0171**] Additionally, the output Q_{20} is supplied to a LCD driver **4212** whose output in turn drives a LCD graphic segment-**24214**. Further, the output Q_{21} is supplied to a LCD driver **4216** whose output in turn drives a LCD graphic segment-**34218**. As shown in **FIG. 14P**, the LCD graphic segment-**24214** is a "neutral" smiley face, and the LCD graphic segment-**34248** is a "sad" smiley face. It should be understood that various other graphical symbols or images can be used in place of smiley faces.

[**0172**] The driver circuitry **4200** also includes an oscillator **4220** that supplies the output frequency signals ϕ_2 and ϕ_2 to the LCD drivers **4202**, **4212** and **4216**. The driver circuitry **4200** further includes an inverter **4222** coupled to the output Q_{21}. The output of the inverter **4222** is coupled to the enable terminal of the divider (e.g., the binary counter **4000**) so that the divider (e.g., the binary counter **4000**) is stopped once the output Q_{21} is "high."

[**0173**] **FIG. 14Q** is a block diagram of driver circuitry **4300** according to another embodiment of the invention. In this embodiment, the output is a numerical value. In one embodiment, the driver circuitry **4300** can correspond to the latch **1428**, the LCD driver **1430** and the LCD display **1432** as shown in **FIG. 14B**.

[**0174**] In this embodiment, the driver circuitry **4300** has the capability to separately drive a plurality of different segments. These segments are segments of a LCD display and can be combined to form numerical values. For example, in one embodiment, the segments can be utilized to output numerical values from 0-9. In other embodiments, the range of numerical outputs could be more or less than 0 through 9.

[**0175**] The driver circuitry **4300** receives a plurality of outputs from a divider (e.g., the binary counter **4000**), such as outputs Q_{19}, Q_{20}, Q_{21} and Q_{22}. These outputs are supplied to a BCD-to-7 segment converter **4302**. The output of the converter **4302** is supplied to a 7-segment LCD driver **4304**. The 7-segment LCD driver **4304** couples to a 7-segment display **4306**. Here, the outputs from the divider (e.g., the binary counter **4000**) are converted such that a numerical range is output on the 7-segment display **4306**. For example, the 7-segment display **4306** can display a number from 0 to 9 indicating a quantity or intensity of radiation. A NAND gate **4308** is coupled to the output Q_{19} and the output Q_{22} so as to decode a value of "9" at the outputs and cause the enable signal to go "low", thereby ceasing operation of the divider (e.g., binary counter **4000**) when such reaches its maximum value.

[**0176**] The radiation monitoring system can also be implemented by primarily digital design. **FIG. 14R** is a block diagram of a radiation monitoring system **4400** according to another embodiment of the invention. The radiation monitoring system **4400** uses a microcontroller **4402** and can be considered a primarily digital implementation. As an example, the radiation monitoring system **4400** can implement functions similar to the radiation monitoring system **1400** shown in **FIG. 14A** as well as the radiation monitoring system **1420** shown in **FIG. 14B**, using either radiation-to-frequency techniques or, alternatively, radiation-to-pulse-width techniques. However, the flexibility provided by the digital implementation is not limited to implementing these particular techniques.

[**0177**] In addition to the microcontroller **4402**, the radiation monitoring system **4400** includes a battery **4404** and a capacitor **4406**. The battery **4404** provides power to the microcontroller **4402**. The capacitor **4406** together with the sensor **1422** and the microcontroller **4402** can be used to monitor radiation. The microcontroller **4402** also determines whether and what to display on the LCD panel **1432**. In one implementation, the microcontroller **4402** can include a display driver for driving the LCD panel **1432**. One example of a suitable microcontroller for the microcontroller **4402** is the 4-bit microcontroller TM8704 available from Tenx Technology, Inc.

[**0178**] In one embodiment, the monitoring of radiation by the radiation monitoring system **4400** is performed using a pulse-width measurement technique. In such an embodiment, periodically, the microcontroller **4402** outputs a HIGH signal (digital "1" signal) on an OUTPUT pin and then monitors an INPUT pin for a HIGH signal. In one implementation, the sensor **1442** is implemented by a photodiode having its anode connected to the INPUT pin and its cathode connected to the OUTPUT pin. When the photodiode detects radiation, the photodiode conducts. Then, the HIGH signal on the OUTPUT pin propagates to the INPUT pin and charges up the capacitor **4406**. The higher the intensity of the radiation, the faster the capacitor **4406** is charged to the HIGH signal. The duration of time between the outputting of the HIGH signal on the OUTPUT pin and the detection of a HIGH signal on the INPUT pin is dependent on the radiation intensity detected by the sensor **1422** and the capacitance of the capacitor **4406**. The microcontroller **4402** measures this duration of time. The radiation intensity measured by the microcontroller **4402** is thus inversely proportional to the period of time. An intensity value can be computed as a value that is proportional to a constant divided by the period of time. This intensity value is then accumulated with the prior accumulated intensity value to determine a current accumulated intensity value. The current accumulated intensity value is then compared to one or more threshold levels to determine an output indication to be displayed on the LCD panel **1432**. As discussed elsewhere in this patent application, the output indication can take many different forms. One exemplary form is a series of increasing bars that are activated as the accumulated current intensity value exceeds a corresponding series of threshold levels.

[**0179**] In one embodiment, upon turn-on of the radiation monitoring system **4400**, such as via a switch (SW1) **4408**, the current accumulated intensity value maintained by the microcontroller **4402** can be cleared or set to zero. Hence, the turn-on can also act as a reset. In an alternative embodiment, the current accumulated intensity value could be very gradually reduced to provide a slow discharge of the accumulated intensity value as a function of time. In the alternative embodiment, the current accumulated intensity value need not be reset.

[**0180**] In one embodiment, to assist in the efficient power utilization of the radiation monitoring system **4400**, the microcontroller **4402** can be placed in a low power state when not acquiring a radiation measurement. This can be achieved by a sleep, halt or stop mode or other approaches to reduce power consumption. Then, periodically the microcontroller would briefly operate in an active or non-low power state to acquire and accumulate the radiation mea-

surement. The periodicity can vary with implementation, such as from fifteen (15) seconds to fifteen (15) minutes. The greater the period the longer battery life, but the less the accuracy. A reasonable solution might use a period on the order of about three (3) minutes. In acquiring the period of time (for the radiation measurement), a maximum time-out can be provided so that power is not wasted. Typically, if the radiation monitoring system is monitoring light or UV radiation in the dark (or for UV, the environment has very low UV, such as at night or inside a car with windows closed), then the time period being measured would time-out. Thereafter, if desired, the periodicity by which re-measurement is performed can be made longer so as to further conserve power. In another embodiment, once the radiation monitoring system **4400** is turned-on, it can remain on for a predetermined period of time and then automatically turn itself off (or enter a very low power mode). For example, after being turned-on with no user input for eight (8) hours, the radiation monitoring system **4400** can automatically turn itself off.

[**0181**] The radiation monitoring system **4400** can also include a second switch (SW2) **4410** to enable a user's skin type to be selected. For example, the second switch **4410** can provide different switch positions for different skin types (e.g., light, medium and dark). The switch position can affect the various threshold levels that are used when comparing with the current accumulated intensity value to determine an output indication to be displayed on the LCD panel **1432**. As an example, when the output indication is presented as a series of five segments (S1-S5) of increasing bars that are activated as the accumulated current intensity value exceeds a series of threshold levels, Table I provided below provides illustrative threshold levels for various skin types.

TABLE I

Skin Type	S1	S2	S2	S4	S5
Light	.25	.5	1	2	4
Medium	.5	1	2	4	8
Dark	1	2	4	8	16

[**0182**] The times (durations) provided in Table I are in units of hours and are times for the various segments of the LCD panel to activate in the presence of medium-to-light radiation (e.g., UV index (UVI) of about 3). It should be noted that if the radiation present were greater than medium-to-light, then these times in Table I would be shorter. Likewise, if the radiation present were less than medium-to-light, then these times in Table I would be longer.

[**0183**] **FIGS. 15A, 15B** and **15**C are radiation detection systems according to different embodiments of the invention. These radiation detection systems are described in the context of UV radiation detection (which uses a UV sensor); however, it should be understood that these radiation detection systems can be also be used to detect other types of radiation. This can be accomplished, for example, by replacing the UV sensor in the radiation detection system with another type of sensor, such as an infrared sensor or light sensor. These UV detection systems are compact modular systems. The UV detection systems can be built on a single substrate that is designed to be inserted into an end product. Since the UV detection system is compact and modular, the end product need only have an opening, cavity or container to hold or encompass the UV detection system. As such, the end product can quickly be transformed into an end product capable of providing UV monitoring. Advantageously, in one embodiment, the UV detection system is such that has minimal impact on design of the end product and no tedious wiring is required. For example, in case in which the end product is an eyeglass frame, a temple of the eyeglass frame can have an opening, cavity or container to hold or encompass the UV detection system, whereby no other changes or complications to the eyeglass frames need be imposed. Other such end-products can include: hats, shoes, tee-shirts, swimming-suits, key rings, purses, beverage can holders, and other consumer products.

[**0184**] **FIG. 15A** is a cross-sectional diagram of a UV detection system **1500** according to one embodiment of the invention. The UV detection system **1500** is build on a substrate **1502**. The substrate **1502** can be a printed circuit board, a flexible tape or film (e.g., Kapton® polyimide film), ceramic, and the like, as known in the art. The UV detection system **1500** includes a power source **1504**, an UV sensor **1506**, electrical circuitry **1508** and a display device **1510** (e.g., LCD or LED). The display device **1510** is one type of output device, so it should be recognized that other embodiments can utilize other types of output devices. The power source **1504** is, for example, a battery or a solar panel of one or more solar cells. For example, if the power source **1504** is a battery, the battery can be a coin battery, such as often used in electronic watches. In one embodiment, the UV sensor **1506** includes a phototransistor. In one embodiment, the electrical circuitry **1508** includes one or more of analog electrical components (e.g., capacitors, resistors, diodes, transistors) or integrated circuits. Any such integrated circuits can be provided in a variety of packages, but surface mount packages can help maintain a thin profile for the UV detection system **1500**. The various electrical components can be wire bonded onto the substrate **1502**. For example, a SiC or GaN phototransistor (or photodiode) can serve as at least part of a UV sensor and be wire bonded onto the substrate **1502** or other electrical component. The UV detection system **1500** shows components of the system mounted to both sides of the substrate **1502**.

[**0185**] **FIG. 15B** is a cross-sectional diagram of a UV detection system **1520** according to another embodiment of the invention. The UV detection system **1520** can utilize the same or similar components as the UV detection system **1500**. However, unlike the UV detection system **1500**, the UV detection system **1520** mounts all components on one side of the substrate **1502**. The effect of the UV detection system **1520** is a thinner module, though the substrate **1502** may be longer, as compared to the UV detection system **1500** shown in **FIG. 15A**.

[**0186**] **FIG. 15C** is a cross-sectional diagram of a UV detection system **1540** according to another embodiment of the invention. The UV detection system **1540** can utilize the same or similar components as the UV detection system **1500**. However, unlike the UV detection system **1500**, the UV detection system **1540** mounts the UV sensor **1506** at or near the edge of the substrate **1502**. This has the potential advantage of positioning the UV sensor **1506** in a position so that it is better able to receive incident radiation (e.g., sunlight). The mounting of the UV sensor **1506** with respect to the substrate **1502** can also be flexible so that the UV sensor **1506** can be positioned, such as angularly positioned

with respect to the substrate **1502** and/or angularly oriented when assembled into an opening, cavity or container of an end-use product. For example, the UV sensor **1506** could be soldered onto the substrate **1502** tipped at an angle. Alternatively, a small prism could be mounted on top of the UV sensor **1506**, providing an angled direction of sensitivity. For example, the prism could be formed in place by filling a small, angled, box with clear optical adhesive (such as epoxy) that, when set would provide a prism, efficiently-coupled to the UV sensor **1506**.

[**0187**] The UV sensor **1506** utilized in the UV detection systems **1500**, **1520** and **1540** may use an optical filter with an optical sensor. For example, the optical sensor can respond to light, UV and infrared radiations, and the sensitivity of the optical filter causes the optical sensor to capture primarily the target radiation (e.g., UV) wavelengths of light. Hence, the UV sensor **1506** can include such optical filter. For example, the optical filter can be implemented as a coating on the optical filter. Alternatively, the optical filter can also be a separate component that is positioned proximate to the optical sensor when the end product is assembled. In other words, an optical filter can be another component of the UV detection system, or can be a separate component that is inserted when assembled into the end product. In one embodiment, an optical adhesive can be used to secure the optical filter to the optical sensor.

[**0188**] **FIG. 16A** is a cross-sectional view of an eyewear housing **1600** containing a UV detection system according to one embodiment of the invention. Here, the eyewear housing **1600** can represent a portion of the temple region of a frame for a pair of glasses. Typically, the portion of the temple region is forward of the user's ear (i.e., towards the lens holders) when the glasses are being worn. The UV detection system contained within the eyewear housing **1600** is, for example, the UV detection system **1500** shown in **FIG. 15A**. The eyewear housing **1600** has an opening, cavity or container to receive the UV detection system. The eyewear housing **1600** also has a first opening **1602** and a second opening **1604**. The first opening **1602** is aligned with the power supply **1504**, which would in such an embodiment be a solar panel. Hence, the first opening **1602** can allow light to impinge on the solar panel. The second opening **1604** is aligned with the display device **1510** so that information displayed can be seen. The eyewear housing **1600** also includes an optical filter **1606** that is positioned proximate to the UV sensor **1506**. In one embodiment, the optical filter **1606** is a separate component that inserted into an opening in the eyewear housing **1600** that is proximate (e.g., adjacent) to the UV sensor **1506**. In another embodiment, the optical filter **1606** is integral with the UV sensor **1506**.

[**0189**] **FIG. 16B** is a cross-sectional view of an eyewear housing **1620** containing a UV detection system according to another embodiment of the invention. The eyewear housing **1620** has an opening, cavity or container to receive the UV detection system, such as the UV detection system **1500** shown in **FIG. 15A**. The eyewear housing **1620** also has a first window **1622** and a second window **1624**. The first window **1622** is aligned with the power supply **1504**, which would in such an embodiment be a solar panel. Hence, the first window **1622** can allow light to impinge on the solar panel. The second window **1624** is aligned with the display device **1510** so that information displayed can be seen. The eyewear housing **1600** also includes a third window **1626**. The third window **1626** is positioned proximate to the UV sensor **1506**. The third window **1626** can, in one embodiment, operate as an optical filter for the UV sensor **1506**. The first and second windows **1622** and **1624** can be clear or colored so long as adequate light passes through.

[**0190**] **FIG. 16C** is a cross-sectional view of an eyewear housing **1640** containing a UV detection system according to still another embodiment of the invention. The eyewear housing **1640** is generally similar to the eyewear housing **1620** illustrated in **FIG. 16B**. However, **FIG. 16C** illustrates one way to secure the UV detection system within the portion of the temple region of the eyewear housing **1640**. In particular, the eyewear housing **1640** include a stand **1642** and an adhesive material **1644**. When assembled, the UV detection system can be placed within the temple region of the eyewear housing **1640** and positioned against the stand **1642**, then the adhesive **1644** can be provided within the temple region to secure the UV detection system in position. The adhesive can vary widely, such as glue, double-stick tape, silicone rubber, epoxy, etc.

[**0191**] **FIG. 16D** is a cross-sectional view of an eyewear housing **1660** containing a UV detection system according to yet still embodiment of the invention. The eyewear housing **1660** is generally similar to the eyewear housing **1600** illustrated in **FIG. 16A**, except that the electrical circuitry **1508** may be repositioned on the substrate **1502** and a switch base **1662** and a switch **1664**, such as a button switch, are provided. As shown in **FIG. 16D**, the switch base **1662** can attach to the substrate **1502** and thereby support the switch **1664** that protrudes outside of the eyewear housing **1660** (or is otherwise accessible) so that a user can activate the switch (e.g., press the button).

[**0192**] **FIG. 16E** is a cross-sectional view of an eyewear housing **1670** containing a radiation monitoring system according to one embodiment of the invention. The eyewear housing **1670** includes a substrate **1502**, such as a printed circuit board. The UV sensor **1506**, more generally a radiation sensor, can be placed in an opening or indentation of the substrate **1502**, or on the substrate **1502**. The optical filter **1606** is provided proximate to the radiation sensor which is also adjacent to an opening **1672** in the eyewear housing **1670**. As an example, the eyewear housing **1670** can correspond to a temple of a pair of eyeglasses. The electrical circuitry **1508** can also be attached to the substrate **1502**. In this embodiment, the electrical circuitry **1508** includes an integrated circuit chip **1674** that is attached or bonded to a first side of the substrate **1502** (e.g., printed circuit board). As an example, the integrated circuit chip **1674** can be a microcontroller, such as the microcontroller **4402** illustrated in **FIG. 14R**. The display device **1510** can be attached to a second side of the substrate. For example, the display device **1510** can be a LCD panel. Optionally, the opening **1672** can contain an optical element, such as a lens, to focus radiation onto the radiation sensor, thereby broadening sensitivity to the angle of incident radiation. broadening angle sensitivity. The optical element may also service as a radiation attenuator and/or an optical filter. For example, a tinted diffuser dome can act as a lens and an attenuator. Hence, if such an optical element is used, the optical element may obviate the need for the separate optical filter **1606**. More generally, the optical filter **1606** may not be necessary when the sensitivity of the radiation sensor is adequate to limit the measurement to the desired radiation. Although not shown in **FIG. 16E**,

the radiation monitoring system could also typically include a power source, such as a battery or solar cell, one or more switches, and additional electrical circuitry **1508** (e.g., capacitor) besides the integrated circuit chip **1674**.

[**0193**] In general, the UV detection system according to the invention can make use of zero or more switches. One type of switch is a button switch, such as a push-button switch. As an example, the switch can serve as a reset switch, an on/off switch, or an on (and reset) switch.

[**0194**] **FIG. 17A** is a cross-sectional view of a module housing **1700** according to one embodiment of the invention. As shown in **FIG. 17A**, the module housing **1700** can operate as a housing for the UV detection system **1500** shown in **FIG. 15A**. The module housing **1700** includes a first window **1702** and a second window **1704**. The first window **1702** can be proximate to the display device **1510**, and the second window **1704** can be proximate to the power supply **1504**, which would in such an embodiment be a solar panel. The first and second windows **1702** and **1704** can be clear or colored so long as adequate light passes through. In one embodiment, the thickness of the first and second windows **1702** and **1704** is greater than the thickness of the walls of the module housing **1700**. The module housing **1700** can also include an opening **1706** that is positioned proximate to the UV sensor **1506**. Still further, although not illustrated in **FIG. 17A**, the module housing **1700** can further include one or more vents or holes so that air can circulate through the module housing **1700**. Alternatively, the module housing **1700** does not include vents or holes, so as to be water-resistant or water-proof.

[**0195**] The module housing **1700** is a housing for a module, such as a UV detection system. The module housing **1700** is then placed into an opening, cavity or container of an eyewear housing, such as a temple region of the eyewear housing. The module housing **1700** protects the module. The module housing **1700** can also be used to regularize or standardize the form factor for the UV detection system, such that the opening, cavity or container of the eyewear housing can be regularized or standardized.

[**0196**] **FIG. 17B** is a cross-sectional view of an eyewear housing **1720** according to one embodiment of the invention. The eyewear housing **1720** has an opening, cavity or container **1721** for receiving the module housing **1700**. As shown in **FIG. 17B**, the module housing **1700** is contained by the eyewear housing **1720**. The eyewear housing **1720** includes an opening **1722** that corresponds to the first window **1702** of the module housing **1700**. The eyewear housing **1720** also includes an opening **1724** that corresponds to the second window **1704** of the module housing **1700**. Still further, the eyewear housing **1720** can optionally further include an optical filter **1726** corresponding to the third opening **1706** of the module housing **1700** (and thus proximate to the UV sensor **1506**). The module housing **1700** can, for example, be held in position with respect to the eyewear housing **1720** by an adhesive or by an interference fit.

[**0197**] **FIG. 18** is a cross-sectional view of an eyewear housing **1800** having a reflective-type filter according to one embodiment of the invention. Here, the eyewear housing **1800** can represent a temple region of a frame for a pair of glasses. Typically, a large percentage of the temple region is in front of the user's ear when the glasses are being worn. The eyewear housing **1800** has an internal cavity **1802** where a circuit board **1804** is provided. Electrically coupled to the circuit board **1804** are a UV detector **1806** (e.g., based on a photodetector), electrical circuitry **1808**, a display device (e.g., LED, LCD) **1810**, and solar cell(s) **1812**. As a result, the circuit board **1804** and the UV detector **1806**, the electrical circuitry **1808**, the display device **1810** and the solar cell(s) **1812** are within the internal cavity **1802** and thus embedded within the eyewear housing **1800**.

[**0198**] A UV reflector **1814** is mounted on an internal support **1816**. Light impinges on the UV reflector **1814** via an opening **1818** in the eyewear housing **1800**. The opening **1818** allows radiation to pass through to the UV reflector **1814**. In one embodiment, there can be a piece of transparent material at the opening **1818** to prevent dust or dirt from getting through the opening **1818** into the internal cavity **1802**. The opening **1818** can also be considered a transparent region in the eyewear housing **1800**. The UV reflector **1814** selectively reflects primarily the UV portion of the radiation towards the UV detector **1806**. As a result, the reflector **1814** serves as a reflective-type filter, that is, a type of optical filter. For example, the reflector **1814** can be made of a material that substantially reflects UV light but does not reflect non-UV light. An example of one such reflector is known as a UV hot mirror. Also, the eyewear housing **1800** can also include transparent portions **1820** and **1822** which are adjacent to the display device **1810** and the solar cell(s) **1822**, respectively. The transparent portion **1820** allows light from the display device **1810** to be seen from the outside of the eyewear housing **1800**. The transparent portion **1822** allows light from an external light source to impinge on the solar cell(s) **1812**. Alternatively, the display device **1810** could extend to and conform with an outer surface of part of the eyewear housing **1800**, and the solar cell(s) **1812** could extend to and confirm with an outer surface of part of the eyewear housing **1800**. Alternatively, if a battery were used in place of the solar cell(s) **1822**, then the transparent portion **1822** would not be needed.

[**0199**] In one embodiment, a number of previously described transparent regions, portions, or sheets of materials, such as the transparent portions **1820** and **1822** in **FIG. 18**, can be translucent (including partially translucent). Still another alternative is that the eyewear housing **1800** could be primarily translucent.

[**0200**] The optical sensor or UV sensor can receive impinging light from a variety of different directions (i.e., angle of incidence) depending on implementation. For example, the light can come from an opening in the top of the temple, such as shown in **FIG. 18**, or at a side of the temple, such as shown in **FIGS. 16A-16C** and **17**B. As another example, the light can come from an opening at an angle between the top and the side of the temple. Typically, the optical sensor or the UV detector would be aligned with the opening at whatever angle it takes, such alignment tends to maximize sensitivity of the optical sensor or the UV detector. The optimal angle can also be based on the latitude. Thus, at the equator, the UV detector should point upward. And at the north pole, the sensor should point horizontally. In one embodiment, the size of the opening can be larger to increase impinging light, or can be smaller to decrease impinging light. In another embodiment, the opening can be

flared outward so as to increase the amount of impinging light. Further, the opening can also support a lens for focusing impinging light.

[0201] The UV detection system can also have a "being-worn" switch as noted above. In one embodiment, the "being-worn" switch enables the UV monitoring system to automatically determine when to monitor UV radiation and when not to monitor UV radiation. In particular, the UV radiation can be monitored when an eyeglass frame having the UV detection system is "being-worn" and not when the eyeglass frame is not "being-worn." The "being-worn" switch can be positioned in the temple portion with the other components of the UV detection system. In one embodiment, the UV detection system is provided, as a module as noted above, and which further includes a switch. The switch can, for example, be a "being worn" switch. By having the switch in the module, the manufacture and assembly of the end-product having the UV detection system can be simplified. As examples, the "being-worn" switch can be an optical, magnetic or mechanical switching device.

[0202] The "being-worn" switch can make use of the situation that the temples are in an open position when the eyeglass frame is being worn, and in a closed position when not being worn. In one embodiment, the "being-worn" switch can be positioned at a temple proximate to a region that couples the temple to its corresponding lens holder. For example, the UV detection system (e.g., module) can be provided within the temple region near the end of the temple so that the "being worn" switch is adjacent the lens portion of the eyeglass frame.

[0203] **FIG. 19** is a side view of a temple **1900** for an eyeglass frame according to one embodiment of the invention. The side view of **FIG. 19** shows an outer side of the temple **1900**, namely, the side of the temple **1900** that faces outward when being worn. The temple **1900** includes therein a UV detection system **1902** internal to the temple **1900**. A window **1904** is provided in the temple **1900** for light (e.g., sunlight) to impinge on a UV sensor of the UV detection system **1902**. The window **1904** can also provide some optical filtering effects, such as noted above. Although not shown in **FIG. 19**, the temple **1900** may also have a window or opening for a solar panel. At a forward end **1906** of the temple **1900** where a hinge is typically provided, a pin **1908** is exposed. The pin **1908** passes through an opening at the forward end **1906** of the temple **1900**. The pin **1908** is coupled to a switch internal to the temple **1900** and part of the UV detection system **1902**. When the pin **1908** is not depressed, as shown in **FIG. 19**, the switch informs the UV detection system **1902** that the eyeglass frame is closed, i.e., not being worn. On the other hand, when the eyeglass frame is opened, i.e., presumably being worn, the pin **1908** is depressed by the forward end **1906** abutting against a portion of its corresponding lens holder, thereby informing the UV detection system **1902** that the eyeglass frame is opened. In one embodiment, the pin **1908** is only depressed when the temple **1900** of the eyeglass frame is fully opened, such that the eyeglass frame would almost necessarily be worn (particularly when there is a bias against the eyeglass frame being fully open).

[0204] **FIGS. 20A and 20B** are top view diagrams of a portion of an eyeglass frame **2000** according to one embodiment of the invention. The eyeglass frame **2000** includes a lens holder **2002** and a temple **2004**. The temple **2004** includes a UV detection system therein. The UV detection system includes an opening or window **2006** that corresponds to an optical sensor used by the UV detection system. The optical sensor is used as a "being-worn" switch. When the eyeglass frame **2000** is in the open position as shown in **FIG. 20A**, the optical sensor detects significant light, thereby informing the UV detection system that the eyeglass frame **2000** is presumably being worn. On the other hand, when the eyeglass frame **2000** is in the closed position as shown in **FIG. 20B**, the opening or window **2006** is covered by a flap **2008** provided on the lens holder **2002**. When the flap **2008** covers the opening or window **2006**, no significant light can be detected by the optical sensor. In such case, the UV detection system is informed that the eyeglass frame **2000** is not being worn.

[0205] **FIG. 21** is a side view of a temple **2100** for an eyeglass frame according to one embodiment of the invention. The side view of **FIG. 21** shows an inner side of the temple **2100**, namely, the side of the temple **2100** that faces inward when being worn. The temple **2100** includes therein a UV detection system **2102** internal to the temple **2100**. The temple **2100** may also have a window or opening (not shown) that corresponds to an output device (e.g., display). A window or opening **2104** is provided at a rearward portion of the temple **2100**. The window or opening **2104** corresponds to an optical sensor (internal to the temple **2100**) provided at the window or opening **2104**. The window or opening **2104** allows light (e.g., sunlight) to impinge on the optical sensor. The optical sensor is coupled to the UV detection system **2102** via one or more electrical wires **2106**. When the temple **2100** of the eyeglass frame is being worn by a user, the optical sensor will be blocked from receiving significant amounts of light, thereby informing the UV detection system **2102** that the eyeglass frame is being worn. For example, the optical sensor can be blocked by the user's head or hair when the eyeglass frame is being worn. On the other hand, when the temple **2100** of the eyeglass frame is not being worn by a user, the optical sensor will receive significant amounts of light, thereby informing the UV detection system **2102** that the eyeglass frame is not being worn. Of course, at night often little or no light will impinge on the optical sensor. Optionally, in such case the lack of any significant light (e.g., detected by another optical sensor or solar cell) can be used to ensure that the UV detection system does not operate at night, such that the eyeglass frame can be considered not being worn at night (even if being worn at night).

[0206] **FIG. 22** is a side view of a temple **2200** for an eyeglass frame according to another embodiment of the invention. The side view of **FIG. 22** shows an outer side of the temple **2200**, namely, the side of the temple **2200** that faces outward when being worn. The temple **2200** includes therein a UV detection system **2202** internal to the temple **2200**. Although not shown in FIG. **22**, the temple **2200** may also have windows or openings for a solar panel and/or an optical sensor. At a forward end **2204** of the temple **2200**, a magnetic switch **2206** is provided. The magnetic switch **2206** is internal to the temple **2200** and part of the UV detection system **2202**. The magnetic switch **2206** can use a magnet to provide a switch. The magnetic switch **2206** switches from a first position to a second position when a metallic material is adjacent the forward end **2204** of the

temple **2200**. For example, such metallic material can be provided in a portion of a lens holder that abuts the forward end **2204** when the temple **2200** is in the open position. Here, when the switch is in the open position, the metallic material is adjacent the forward end **2204** of the temple **2200**, and the UV detection system **1902** understands that the eyeglass frame is opened, i.e., presumably being worn. In such case, the switch can be considered to be in the second position. On the other hand, when the eyeglass frame is closed, i.e., not being worn, the switch is in the first position because the metallic material is no longer adjacent the forward end **2204** of the temple **2200**. Then, the UV detection system **2202** understands that the eyeglass frame is closed (i.e., not being worn). In one embodiment, the magnetic switch **2206** can be implemented by a Hall effect sensor. Alternatively, it should be understood that the magnetic switch could be provided at a portion of a lens holder that abuts the forward end **2204** when the eyeglass frame has the temple **2200** open, and the metallic material could be at the forward end **2204**.

[**0207**] The "being worn" switch can also be used by a user to signal the UV detection system to provide its output at an output device, such as a display device. For example, when the "being worn" switch is initially closed (i.e., being worn), the UV detection system can output its text or graphical output to the display device. Typically, the displayed output would be displayed only for a limited period of time (e.g., 10 seconds). Such an approach is power efficient, yet permits the user to obtain the output information when desired. Alternatively, another switch (e.g., dedicated output switch) could be used to cause the output to be displayed for a limited period of time or while the switch is depressed.

[**0208**] The UV detection system can also make use of one or more switches to change operational settings, such as threshold levels, output type, user preferences, user physical characteristics (e.g., skin type), accumulation mode or non-accumulation mode, activation/deactivation of auxiliary sensors.

[**0209**] The UV detection system can make use of one or more variable capacitors or resistors within the design of the electronic circuit to facilitate a manufacturer or dispenser to calibrate the UV detection. Such can assist with quality control as well as consistency or uniformity. The UV detection system can also alter another aspect of the electronic circuitry, such as a count or divide amount (**FIG. 14B**), to calibrate the UV detection.

[**0210**] Calibration or customization of the UV detection system can also be performed after manufacturer by a user or dispenser. As one example, the eyewear can be sold or dispensed with one or more stickers available for placement over the radiation detector (e.g., UV sensor). The stickers can attenuate the radiation impinging on the radiation detector. In other words, the stickers can perform sensitivity adjustment on the UV detection system. Different ones of the stickers can offer different degrees of attenuation. A user can thus select an appropriate sticker based on their skin type (or amount of exposure they prefer) and place it over the radiation detector, thereby calibrating or customizing the UV detection system to the user.

[**0211**] As previously noted, the optical sensor (e.g., UV sensor) can be implemented by at least one photodetector, such as a phototransistor. Although various different phototransistors can be utilized, one example of a suitable phototransistor is Part No. PT100MCOMP available from Sharp Microelectronics of the Americas. As another example, a suitable phototransistor for the phototransistor is Part No. EL-PT15-21B (1206 phototransistor) available from Everlight Electronics Co., Ltd. As still another example, other suitable phototransistors are GaN or SiC phototransistors. Alternatively, although the discussion above at times refers to phototransistors, the photodetector can also be a photodiode. In the case of a photodiode, similar circuitry to that noted above would be utilized. Although various different photodiodes can be utilized, one example of a suitable photodiode is Part No. PD100MCOMP available from Sharp Microelectronics of the Americas.

[**0212**] The radiation sensors or detectors, including phototransistors and photodiodes, used for radiation monitoring are often designed for sensing or detecting certain types of radiation. For example, a UV sensor or UV detector would be an electronic device that is sensitive to UV radiation, namely, the wavelengths of light pertaining to UV spectrum. While such electronic device may be primarily sensitive to such radiation of interest (e.g., UV radiation), they may also be somewhat sensitive to other radiation. Optical filters can be used to assist these sensors or detectors in sensing the desired type of radiation. Nevertheless, radiation monitoring can be achieved even though the radiation sensors or detectors are sensitive to non-desired radiation so long as they are primarily or principally responsive to the desired radiation.

[**0213**] When the radiation to be monitored is UV radiation, the optical filter described above is typically implemented by a material that passes radiation in the UV wavelength band and blocks radiation not in the UV wavelength band. Various materials can be used in this regard. In one embodiment, the material providing the optical filtering can be known as a UV cold mirror. However, in another embodiment, the optical filter may have other characteristics, such as a material (e.g., polycarbonate) that passes radiation not in the UV wavelength band and blocks radiation in the UV wavelength band. In another embodiment, the optical filter can utilize a material that passes light primarily associated with the ultraviolet wavelength range while substantially blocking light of other wavelengths. Such a material can, for example, be a filter made from quartz-glass with nickel oxide, such is commonly known as Wood's glass. The material implementing the optical filter can also be configured in various ways, such as a plug for an opening or a coating on a surface (or on the photodetector itself). In one embodiment, the material implementing the optical filter can either pass or reflect the UV radiation.

[**0214**] An output (e.g., notification, such as a warning) to the user can vary in content and type. The type can be visual and/or audio. The content can be numerical, graphical, musical, textual, synthesized text, etc. A progression of warnings can be used to give more substantial warning (such as when prior warnings are ignored). The output can also be predetermined, dynamically determined or configurable. Still further, the output can be dependent on user preferences, user physical characteristics (e.g., skin type), auxiliary sensor information (e.g., location), and degree of health risk.

[**0215**] The radiation monitoring system can also include one or more connectors with the eyewear. The connectors

can, for example, facilitate electrical or mechanical interconnection with an external electrical device (e.g., computing device, media player, headset, power source). Although the format and size of the connectors can vary, in one embodiment, the connector is a standard audio connector or a peripheral bus connector (e.g., USB connector).

[0216] The radiation monitoring system can also include one or more switches with the eyewear. The switches can, for example, facilitate user input or control with respect to the radiation monitoring system. For example, the switches can provide one or more of on/off, reset, on, on (and reset), and calibration. One example of a calibration switch is a skin type switch that provides switch positions for different skin types (e.g., light, medium and dark). The radiation monitoring system can also provide a user with an indication of whether the system is currently on or off, such as by a graphical image on a display device or by a LED.

[0217] A radiation monitoring system can also include a memory. The memory can be volatile or non-volatile. The memory can also be removable or non-removable with respect to the eyewear. If the memory is volatile, the radiation monitoring system could include a battery to provide power to the memory so that stored data (e.g., accumulated radiation, user preferences, etc.) can be retained even when adequate solar energy is not available. As an example, the presence of a memory can allow storage of radiation information for an extended period of time to acquire a historical understanding of radiation information.

[0218] In one embodiment, an eyeglass frame can include memory that can store acquired radiation information, such stored radiation information can be subsequently uploaded to a computer, in a wired or wireless manner. The radiation information can then be analyzed by the computer. For example, a doctor may require a patient to keep track of his exposure to UV radiation, or other radiations, to assist the doctor to evaluate risks or symptoms.

[0219] In another embodiment, a user of an eyeglass frame interact with a switch provided on the eyeglass frame to set a calibration level. As an example, in the case of UV radiation, the calibration level can correspond to the user's skin type. In general, the calibration level causes the amount of acceptable radiation (e.g., threshold levels) to vary.

[0220] In still another embodiment, a user can go through a calibration procedure when the user purchases the eyeglasses. The calibration procedure can operate to personalizes the UV detection system for the user. For example, the complexion of the user's skin affects the user's sensitivity to UV. Based on the skin complexion, a UV monitoring system adjusts the levels of acceptable exposure to UV. The calibration procedure can be performed wired or wirelessly. For example, the calibration can be done by a computer, with the calibration data downloaded to the eyeglasses through a connector integral with the eyeglasses.

[0221] A radiation monitoring system can also include a communication module. The communication module would allow data transmission to and from the radiation monitoring system (namely, the eyewear) and an external device. The data being transmitted can, for example, be radiation information, configuration data, user preferences, or auxiliary sensor data. The data transmission can be wireless or wireline based. The eyewear can further include a connector operatively connected to the radiation monitoring system. Such a connector can facilitate data transmission with respect to the radiation monitoring system or the eyewear.

[0222] A temple of a pair of glasses can be removable of the remainder of the frame. Such facilitates replacement of temples. For example, a convention temple could be removed from a frame and replaced with a temple having a least one electrical component at least partially embedded therein.

[0223] A radiation monitoring system can be partially or fully contained in a temple arrangement associated with a temple of a pair of glasses. In one embodiment, the temple arrangement can be removable from the temple. A temple arrangement can be a temple tip, a temple cover or a temple fit-over.

[0224] A radiation monitoring system can be partially or fully tethered to a pair of glasses. For example, some of the components for monitoring radiation or one or more auxiliary sensors can be tethered to the eyewear. In one embodiment, the tethered components can be tethered at the neck or upper back region of the user. Tethering components allows for increased design freedom with the eyewear as well as additional area with which to house the components.

[0225] Still further, a radiation monitoring system could be partially or completely within a device or a base that can be tethered to eyewear.

[0226] A number of embodiments have been described above for an eyeglass frame, i.e., primary frame. Such embodiments are also applicable to an auxiliary frame. An auxiliary frame can attach to a primary frame through different techniques, such as using clips. Another technique to attach an auxiliary frame to a primary frame is by way of magnets. Examples of using magnets as an attachment technique can be found, for example, in U.S. Pat. No. 6,012,811, entitled, "EYEGLASS FRAMES WITH MAGNETS AT BRIDGES FOR ATTACHMENT."

[0227] Although much of the discussion above concentrates on UV monitoring, the invention is generally applicable to radiation monitoring. The radiation can, for example, pertain to one or more of UV, infrared, light and gamma radiation. Light, namely visible light, can be referred to as ambient light.

[0228] Also, the above discussion concerning UV sensor or UV monitor is generally applicable to radiation sensors or monitors. One embodiment of a radiation sensor or monitor which principally measures light is a light sensor or a light monitor. More particularly, in measuring light, sunlight is a dominant source of light, such that a radiation sensor or monitor which principally measures light can be referred to as a sun sensor or a sun monitor. In such case, radiation monitoring can be considered light monitoring or sunlight monitoring.

[0229] Visible light is part of everyday life and is generally not considered harmful to persons. In one embodiment, the measurement of light can be used to infer a measurement of harmful radiation (e.g., UV radiation).

[0230] A number of embodiments have been described where a radiation monitoring system is embedded in a temple of an eyeglass frame. However, in other embodiments, the radiation monitoring system can be in other parts

of the eyeglass frame, such as the bridge or lens holder region. Also, for eyewear having shield(s) or wrap-around lenses, the radiation monitoring system can also be in such shield(s) or lenses.

[0231] Although much of the above discussion pertains to providing radiation (e.g., radiation) monitoring capabilities in eyewear, it should be understood the any of the various embodiment, implementations, features or aspects noted above can also be utilized is other or on end products besides eyewear. Examples of other such end-products can include: hats (e.g., soft hats, hard-hats, helmets), watches or watch bands, bracelets, bracelet accessories, necklaces, necklace accessories, rings, shoes (e.g., sandals, athletic shoes, beach shoes), shoe accessories, clothing (e.g., tee-shirt, swimming-suit, ties, pants, jackets, etc.), belts, belt accessories, zippers, key rings, purses, beach-tags, containers (e.g., cups, bottle, tube—such as a sun tan lotion bottle or tube); container holders (e.g., can holders, coasters, coolers, etc.), and other consumer products.

[0232] **FIGS. 23A-23G** illustrate examples of various end products having radiation monitoring capability. **FIG. 23A** illustrates a hat **2300** having a radiation monitoring system **2302**. The radiation monitoring system **2302** can be attached to or embedded within the hat **2300**. **FIG. 23B** illustrates a watch **2304** having a radiation monitoring system **2302**. The watch **2304** can have a base **2306** and a band **2308**. The radiation monitoring system **2302** can be coupled to the band **2308** as illustrated in **FIG. 23B**. Alternatively, the radiation monitoring system **2302** can be coupled to the base **2306**. **FIG. 23C** illustrates a shirt **2310** having a radiation monitoring system **2302**. As shown in **FIG. 23C**, in one embodiment, the radiation monitoring system **2302** can be placed in the upper, chest, back or shoulder region of the shirt **2310**. **FIG. 23D** illustrates a shoe **2312** having a radiation monitoring system **2302**. The radiation monitoring system **2302** can, for example, be placed at the top, upper portion of the shoe **2312**. **FIG. 23E** illustrates a key chain **2314** having a radiation monitoring system **2302**. **FIG. 23F** illustrates a bracelet or necklace **2316** having a radiation monitoring system **2302**. **FIG. 23G** illustrates a bottle or tube **2318** having a radiation monitoring system **2302**.

[0233] If the end product is soft or made of cloth (e.g., clothing, purse, hat, etc), then the radiation monitoring system (e.g., provided as a module) can be sewn onto the cloth or adhered to the cloth using an adhesive (e.g., adhesive tape). The module, or a case for the module, can have thin flanges about its periphery which can be easily sewn onto the cloth. The case for the radiation monitoring system can be molded into its desired shape (e.g., injection molded, compression molded or vacu-formed). The case can be soft (vinyl, thin polypropylene, soft polyurethane, or PET). Typically, if flanges are utilized for sewing, they would be thin and soft. Alternatively, the case can be hard (e.g., PVC, polypropylene, nylon, polycarbonate, or styrene). If the end product is hard, the case can also be hard.

[0234] When the end product is a container, such as the bottle or tube **2318** shown in **FIG. 23G**, the radiation monitoring system **2302** can be attached to the bottle or tube **2318** or can be molded into the bottle or tube **2318**. In one embodiment, the bottle or tube **2318** is a plastic container. The radiation monitoring system **2302** is particularly well suited to be attached or integral with a bottle or tube, often plastic, that contains sun tan lotion. Sun tan lotion includes sun tan or sun block lotions, including sun tan or sun block oils.

[0235] The various embodiments, implementations and features of the invention noted above can be combined in various ways or used separately. Those skilled in the art will understand from the description that the invention can be equally applied to or used in other various different settings with respect to various combinations, embodiments, implementations or features provided in the description herein.

[0236] The invention can be implemented in software, hardware or a combination of hardware and software. A number of embodiments of the invention can also be embodied as computer readable code on a computer readable medium. The computer readable medium is any data storage device that can store data which can thereafter be read by a computer system. Examples of the computer readable medium include read-only memory, random-access memory, CD-ROMs, magnetic tape, optical data storage devices, and carrier waves. The computer readable medium can also be distributed over network-coupled computer systems so that the computer readable code is stored and executed in a distributed fashion.

[0237] The advantages of the invention are numerous. Different embodiments or implementations may yield one or more of the following advantages. One advantage of the invention is that radiation monitoring can be inconspicuously performed in conjunction with eyewear. Another advantage of the invention is that electrical components for radiation monitoring can be embedded within a frame (e.g., temple) of eyewear. Still another advantage of the invention is that radiation monitoring can be intelligently performed such that it operates only at likely appropriate times to improve accuracy and usefulness. Yet another advantage of the invention is that eyewear may further include one or more auxiliary sensors that can cause additional output to be provided to the user.

[0238] Numerous specific details are set forth in order to provide a thorough understanding of the invention. However, it will be understood by those skilled in the art that the invention may be practiced without these specific details. The description and representation herein are the common meanings used by those experienced or skilled in the art to most effectively convey the substance of their work to others skilled in the art. In other instances, well-known methods, procedures, components, and circuitry have not been described in detail to avoid unnecessarily obscuring aspects of the present invention.

[0239] In the foregoing description, reference to "one embodiment" or "an embodiment" means that a particular feature, structure, or characteristic described in connection with the embodiment can be included in at least one embodiment of the invention. The appearances of the phrase "in one embodiment" in various places in the specification are not necessarily all referring to the same embodiment, nor are separate or alternative embodiments mutually exclusive of other embodiments. Further, the order of blocks in process flowcharts or diagrams representing one or more embodiments of the invention do not inherently indicate any particular order nor imply any limitations in the invention.

[0240] The many features and advantages of the invention are apparent from the written description and, thus, it is

intended by the appended claims to cover all such features and advantages of the invention. Further, since numerous modifications and changes will readily occur to those skilled in the art, it is not desired to limit the invention to the exact construction and operation as illustrated and described. Hence, all suitable modifications and equivalents may be resorted to as falling within the scope of the invention.

What is claimed is:

1. An electronic circuit for monitoring radiation, said electronic circuit comprising:

a radiation detector that detects an intensity of at least one type of radiation;

a radiation accumulator that receives and accumulates the detected intensity from said radiation detector;

a comparator that determines whether the accumulated intensity exceeds at least one threshold level; and

an output device that is configured for indicating whether the accumulated intensity exceeds the at least one threshold level.

2. An electronic device as recited in claim 1,

wherein said electronic circuit is at least partially embedded in or attached to a consumer product, and

wherein said output device informs a user of the consumer product that excess radiation has been received when the accumulated radiation intensity exceeds the at least one threshold level.

3. An electronic device as recited in claim 2, wherein the consumer product is eyewear.

4. An electronic device as recited in claim 2, wherein the threshold level is configurable by the user of the consumer product or is determined dependent on the user of the consumer product.

5. An electronic device as recited in claim 3,

wherein said electronic circuit further comprises a "being worn" indicator, and

wherein at least a portion of said electronic circuit is inactive when said "being worn" indicator determines that the eyewear is not being worn.

6. An electronic device as recited in claim 1,

wherein said output device is a display device, and

wherein said display device displays at least a first graphic when the accumulated intensity exceeds the at least one threshold level, and displays a second graphic or no graphic when the accumulated intensity does not exceed the at least one threshold level.

7. An electronic device as recited in claim 1, wherein said radiation detector detects at least one of UV radiation, infrared radiation and light.

8. An electronic device as recited in claim 1, wherein said radiation detector detects radiation associated with a particular range of wavelengths.

9. An electronic device as recited in claim 1, wherein said radiation detector is only activated on a periodic basis, thereby reducing power consumption of said electronic circuit.

10. An electronic device as recited in claim 1,

wherein said electronic circuit further comprises at least one battery or a least one solar cell, and

wherein said electronic circuit further comprises at least one of a reset switch, a reset/on switch and an on/off switch.

11. An electronic device as recited in claim 1, wherein said electronic circuit is at least partially embedded in a temple portion of an eyeglass frame.

12. An electronic circuit for monitoring radiation, said electronic circuit comprises:

a radiation detector that detects an intensity of a type of radiation;

a radiation-to-frequency converter that receives the detected intensity and converts the detected intensity to a frequency signal, the frequency signal having a frequency that is dependent on the detected intensity;

an output manager operatively connected to said radiation-to-frequency converter, said output manager being configured to determine whether to output an output indication based on the frequency signal; and

an output device that is configured for outputting the output indication.

13. An electronic circuit as recited in claim 12,

wherein said radiation-to-frequency converter is periodically activated by a control signal having a duty cycle,

wherein said electronic circuit further comprises a power source for providing power to said electronic circuit,

wherein the periodic nature of the control signal reduces power consumption by said electronic circuit and thus conserves power drawn from the power source, and

wherein the duty cycle of the control signal is such that, for a given period of the duty cycle, the control signal causes said radiation-to-frequency converter to be off more than on.

14. An electronic circuit as recited in claim 12, wherein said output manager comprises a divider that divides down the frequency signal to control when to output the output indication.

15. An electronic circuit as recited in claim 12,

wherein said output manager comprises:

a divider operatively connected to receive the frequency signal from said radiation-to-frequency converter and to produce a divided frequency signal; and

a latch operatively connected to said divider to produce an output control signal based on the divided frequency signal, and

wherein said output device produces the output indication based on the output control signal.

16. An electronic circuit as recited in claim 12, wherein said electronic circuit is at least partially embedded in a temple portion of an eyeglass frame.

17. An electronic circuit for monitoring radiation, said electronic circuit comprises:

a radiation detector that detects an intensity of a type of radiation;

a radiation-to-pulse-width converter that receives the detected intensity from said radiation detector and

converts the detected intensity to a radiation signal, the radiation signal having a pulse-width that is dependent on the detected intensity;

an output manager operatively connected to said radiation-to-pulse-width converter, said output manager being configured to determine whether to output an output indication based on the pulse-width of the radiation signal; and

an output device that is configured for outputting the output indication.

18. An electronic circuit as recited in claim 17,

wherein said radiation detector is activated on a periodic basis,

wherein said electronic circuit further comprises a power source for providing power to said electronic circuit, and

wherein the periodic nature of the radiation detection by said radiation detector reduces power consumption by said electronic circuit and thus conserves power drawn from the power source.

19. An electronic circuit as recited in claim 18, wherein said electronic circuit further comprises:

an accumulator that accumulates the pulse-widths provided when said radiation detector is periodically activated, and

wherein said output manager determines whether to output the output indication based on the accumulated pulse-widths.

20. An electronic circuit as recited in claim 19, wherein the output indication has a plurality of separately controlled segments that are individually activated based on the accumulated pulse-widths.

21. An electronic circuit as recited in claim 17, wherein said radiation-to-pulse-width converter and said output manager are implemented by a microcontroller integrated circuit chip.

22. An electronic circuit as recited in claim 17,

wherein said output device is a display device, and

wherein said display device displays at least a first graphic when the amount of radiation that has been accumulated by said electronic circuit is excessive, and displays a second graphic or no graphic when the accumulated amount of radiation is not excessive.

23. An electronic circuit as recited in claim 17, wherein said radiation detector detects at least one of UV radiation, infrared radiation and light.

24. An electronic circuit as recited in claim 17, wherein said electronic circuit is at least partially embedded in a temple portion of an eyeglass frame.

* * * * *